ASHLAND SCHOOL DISTRICT

WILLOW WIND RENOVATION

BID DOCUMENTS

HMK COMPANY

arkitek:design&architecture, llc

FEBRUARY 2021

PROJECT MANAGER:	Mike Freeman, Project Manager HMK Company 46 N Front Street, Suite 201 Medford, OR 97501 Phone: 541-210-9845 Email: mike.freeman@hmkco.org
DESIGN PROFESSIONAL:	Chris Brown, Principal arkitek:design&architecture, llc 426 A Street Ashland, Oregon 97520 Phone: 541-591-9988 Email: arkitek@arkitek.us
SCHOOL DISTRICT:	Steve Mitzel, Program Executive Ashland School District 885 Siskiyou Blvd Ashland, OR 97520 Phone: 541-967-4505 Email: steve.mitzel@albany.k12.or.us
PROJECT:	Willow Wind Renovation
LOCATION:	Willow Wind Learning Center 1497 E Main St Ashland, Oregon 97520

TABLE OF CONTENTS

THE
ASHLAND SCHOOL DISTRICT
WILLOW WIND RENOVATION
Bids Due 2:00 PM, March 9, 2021

INVITATION FOR BIDS

NOTICE IS HEREBY GIVEN that sealed bids will be accepted at **the HMK Medford Office** by Mike Freeman, Project Manager, HMK Company at 46 N Front Street, # 201, Medford, OR 97501 until **2:00 PM** Local Time, **March 9, 2021** at which time and place bids will be closed. A public bid opening will be held immediately after closing via Teams Meeting. A link to the meeting will be emailed to those firms that are listed on the Pre-Bid Meeting sign-in sheet prior to the time of bid.

The work consists of: HVAC replacement and plumbing design for restroom remodels and a new restroom building for the existing Ashland School District Willow Wind Learning Center.

The following deadlines and restrictions are applicable to the project: Project start date is **June 21, 2021**. Contract must meet a Substantial Completion date of **September 3, 2021.**

A MANDATORY Pre-Bid Meeting will be held at **3:30 PM** on **February 18, 2021** at the Willow Wind Learning Center located at **1497 E Main St, Ashland, OR 97520**. Representatives of the Contractors will meet with the Owner and Project Manager for review of the project specifications and then visit the site for a walk of the facility.

All bids must be submitted on the proposal forms furnished to the bidders. Each bid proposal shall be submitted in a sealed envelope and plainly marked **"WILLOW WIND RENOVATION"** and show the name and business address of the bidder. Each bid must be accompanied by an unconditional cashier's check, certified check or surety bond of the bidder in the amount of ten percent (10%). Unsuccessful bidders will have their security refunded to them when the contract has been awarded.

Bid documents may be obtained from the HMK Company web site https://www.hmkco.org/bid-documents/

Any objections to or comments upon the bid specifications must be submitted in writing to the attention of Mr. Mike Freeman, Project Manager, HMK Company, 46 N Front Street, Suite 201, Medford, OR 97501. To be considered, such objections or comments must be received at least FIVE (5) working days before the bid closing date.

This contract is for a public work subject to ORS 279C.800 to 279C.870 (the Oregon Prevailing Wage Rate Law). **BOLI wage rates will be applicable to this project.** The wage rates are included in the bid documents which are available as noted above.

No bid for a construction contract shall be received or considered by the public contracting agency unless the bidder is licensed by the Construction Contractors Board of the State of Oregon as required by ORS 701.035 and 701.055. Each bid must identify whether the bidder is an Oregon resident bidder, as defined in ORS 279A.120.

Bidder's attention is directed to compliance with ORS 279C.370 regarding submission of the First-Tier Subcontractor Disclosure Form. If the contract amount exceeds $100,000.00, the First-Tier Subcontractor Disclosure Form will be required and may be submitted either with the bid or within **two (2)** hours after the bid closing time and date at the bid site address. Failure to provide the First-Tier Subcontractor Disclosure Form may result in bid rejection.

The District reserves the right to reject any or all bids, to waive formalities, and to postpone the award of the contract for thirty (30) days. All bids and all prices quoted in bids shall be firm for a period of thirty (30) days after the bid closing date.

Dated this February 12, 2021

Mike Freeman, Project Manager, HMK Co.
on behalf of:
Ashland School District

PART 1 – GENERAL

1.1 GENERAL

A. The Work contemplated under this contract with Ashland School District, (also referred to as the Owner or the District), includes all labor, materials, transportation, equipment and services necessary for, and reasonably incidental to, the completion of all Work in connection with the project described in the bidding documents.

B. A brief summary of the Work to be completed for the District is as follows:

HVAC replacement and plumbing design for restroom remodels and a new restroom building for the existing Ashland School District Willow Wind Learning Center.

1.2 EXAMINATION OF SITE AND CONDITIONS

A. Prior to submitting a bid, the bidder shall examine the District facilities, and ascertain all of the physical conditions in relation thereto. The bidder shall also make a careful examination of the drawings, specifications and other contract documents and shall fully inform himself as to the quantity of materials and the sources of supply of the materials. Failure to make these precautions will not release the successful bidder from entering into a contract or excuse him from performing the Work in strict accordance with the terms of the contract.

B. The Owner will not be responsible for any loss or any unanticipated costs that may be suffered by the successful bidder as a result of such bidder's failure to fully inform himself in advance with regard to all conditions pertaining to the Work and the character of the Work required. No statement made by any officer, agent or employee of the Owner in relation to the physical conditions pertaining to the site of the Work will be binding on the Owner.

1.3 INTERPRETATION OF CONTRACT DOCUMENTS

A. If any person contemplating submitting a bid for the proposed contract finds discrepancies in, or omission from, or is in doubt as to the true meaning of any part of the drawings, specifications or form of contract documents, he may submit to the Architect a written request for an interpretation thereof to be received in the office of the Architect no later than **7 calendar days before bid, before 2:00 PM** local time. The person submitting the request will be responsible for its delivery prior to the time of closing.

B. Any official interpretation of the drawings, specifications, and conditions of the contract or forms of contract documents will be made only by subsequent addenda issued by the Project Manager. The Owner will not be responsible for any other explanation or interpretation of the proposed documents.

1.4 SPECIFIED PRODUCTS AND SUBSTITUTIONS

A. Bids must be based upon the use of items and manufacturers named in the specifications, or, approved equals issued by addenda during the bidding period. <u>Approval of equals or substitutions must not be assumed.</u>

B. If a prospective bidder or supplier seeks approval of a particular manufacturer's material or product other than the material, product and / or manufacturer designated

in the specifications, he may submit a written request for such substitute material, product and / or manufacturer. Substitution requests are to be submitted using the Substitution Request Form included in this project manual. Substitution requests must be received in the office of the architect no later than **7 calendar days before bid, before 2:00 PM** local time. The person requesting the substitution will be responsible for delivery of the substitution request form prior to the time of closing. **Faxed or Emailed Substitution Request Forms will be accepted.**

C. Approval of substitution requests will be made only by addenda issued by the Project Manager during the bidding period. The Owner will not be responsible for any other approval of a particular manufacturer's materials.

1.5 PRE-BID MEETING

A. A **MANDATORY** Pre-Bid Meeting will be held at **3:30 PM** on **February 18, 2021** at the Willow Wind Learning Center, **1497 E Main St., Ashland OR 97520**. Representatives of the Pre-Qualified Contractors will meet with the Owner and Project Manager at the site for review of the project specifications and site walk of the facility.

B. Contractors intending to submit proposals for this project must attend this pre-bid meeting. No other meeting will be held.

1.6 GENERAL STATUTORY PROVISIONS CONCERNING PUBLIC CONTRACTS

A. In accordance with the provisions of Oregon Revised Statues (ORS) 279C.530, it is agreed that the Contractor shall make prompt payment, as due, to all person supplying to the contractor labor or materials for the prosecution of the Work provided for herein, pay all contributions or amounts due the State Industrial Accident Fund from the Contractor incurred in the performance of the contract herein, not permit any lien or claims to be file or prosecuted against the District on account of any labor or material furnished, and to pay the State Tax Commission all sums withheld from employees pursuant to ORS 316.169, ORS 316.189 and ORS 316.167.

B. Pursuant to ORS 279C.515, it is agreed that if the Contractor fails, neglects or refuses to make prompt payment on any claim for labor or services furnished to the Contractor by any persons in connection with this agreement as such claim becomes due, the proper officer of officers representing the District may pay such claim to the person furnishing the labor or service and charge the amount of the payment against the Contractor. The payment of a claim in the manner authorized in this paragraph shall not relieve the Contractor or his surety from obligation with respect to any unpaid claims.

C. Pursuant to ORS 279C.520, it is a condition of this agreement that no person shall be employed by the Contractor for more than eight (8) hours in any one (1) day, or forty hours in any one (1) week, except in cases of necessity, emergency or where the public policy absolutely requires it, and in such cases, the person shall be paid at least time and a half pay for all overtime in excess of eight (8) hours in any one (1) day and for Work performed on Saturdays and legal holidays.

D. Pursuant to ORS 279C.525 the Contractor shall comply with the provisions of all federal, state and local statues, ordinances and regulations dealing with the prevention of environmental pollution and the preservation of natural resources that affect the project.

E. Pursuant to ORS 279C.530, it is an express condition of this agreement that the Contractor shall, promptly, as due, make payment to any person, co-partnership, association or corporation furnishing medical, surgical and hospital care or other needed care and attention, incident to sickness or injury, to the employees of such Contractor, or all sums which the Contractor may or shall have deducted from their wages of his employees for such services pursuant to the terms of ORS 279B.230, and any contract entered into pursuant thereto, or collected or deducted from the wages of its employees pursuant to any law, contract or agreement for the purposes of providing or paying for such service.

F. The hourly rate of wage to be paid by the Contractor (and incorporated in his subcontracts) shall not be less than provided in ORS 279C.800 to ORS 279C.870, and as hereinafter included in Section 00 7343-BOLI Wage Rate Requirements.

G. Pursuant to ORS 645.001 et seq. OAR Chapter 437, Div. 3 and OAR Chapter 437-002-0320 through OAR Chapter 437-002-0325, the Contractor shall comply with the following conditions under any contract to provide the District with goods or services.

1. Contractors and their employees shall comply with the requirements of the above cited Laws, Rules, Policies and Regulations

2. The Contractor shall review the Material Safety Data Sheets filed by the District to determine if there are any chemicals stored at the site of Work which the Contractor or any subcontractors will use, or could be exposed to in an emergency

3. Workers shall inform the executive officer at the location where services are being performed of all hazardous chemicals which they or their sub-contractors bring upon education facility property, and upon request, provide the District with M.S.D.S. for such chemicals

H. Each bid shall identify whether the bidder is an Oregon resident bidder, as defined in ORS 279A.120.

I. Pursuant to ORS 279C.830 (3), the contractor and every subcontractor must have a public works bond filed with the Construction Contractors Board before starting work on the project, unless exempt under ORS 279C.836 (4), (7), (8) or (9).

1.7 BID SECURITY

A. No bid will be considered unless accompanied by a cashier's check or bid bond executed in favor of the District and associated facility for an amount equal to at least ten percent (10%) of the base bid and shall accompany the bid as evidence of good faith and as guarantee that if awarded the contract the bidder will execute the contract and provide a performance bond and payment bond as required. The successful bidder's check or bid bond will be retained until he has entered into a satisfactory contract and furnished a 100% performance bond and payment bond. The Owner reserves the right to hold the bid security as hereinafter noted.

B. The bid bond shall be furnished by a bonding company licensed to do business in the State of Oregon.

C. Should the successful bidder fail to execute and deliver the signed agreement and a satisfactory payment bond and performance bond within ten (10) days after the bid has

been accepted by the Owner, the cashiers check or bid bond may be forfeited as liquidated damages at the option of the Owner. The date of acceptance of the bid and the award of the contract as contemplated by the contract documents shall mean the day on which the Owner takes official action in making the award.

1.8 EXECUTION OF THE BID FORM

A. The bid form invites bids on definite drawings and specifications. Only the amounts and information asked for on the bid form furnished will be considered as the bid. Each bidder shall bid upon the Work exactly as specified and provided in the bid form. The bidder shall include in a sum to cover the cost of all items contemplated by the bidding documents.

B. The bid form included in the project manual as Document 00 4100 is the official bid form that will be used in submitting a bid. Only the official bid form may be used in submitting a bid.

C. All blank spaces in the official bid form shall be filled and numbers shall be stated both in writing and in figures. If the bid is made by a partnership, it shall contain the names of each partner and shall be signed in the firm name, followed by the signature of the partner signing for the firm. The address of the bidder shall be typed or printed on the bid form.

D. Bids which are incomplete, or which are conditioned in any way, or which contain erasures or alterations may be rejected.

1.9 SUBMISSION OF BID

A. The bid proposal shall be sealed in an opaque envelope, addressed as follows:

BID PROPOSAL
WILLOW WIND RENOVATION
JACKSON COUNTY SCHOOL DISTRICT 5
46 N Front Street, Suite 201
Medford, Oregon 97501
Attn: Mike Freeman, Project Manager

B. Bids will be received up to **2:00 PM**, local time, **March 9, 2021** at the address listed above.

D. Any bid submitted after the scheduled closing time will be returned to the bidder unopened.

1.10 OPENING OF BIDS

A. A public bid opening will be held immediately following the scheduled closing via Teams Meeting. A link to the meeting will be emailed to those firms listed on the Pre-bid meeting sign-in sheet prior to the time of bid. Each and every bid received prior to the closing time will be publicly opened and read aloud irrespective of any irregularities or informalities contained in such bids.

1.11 DURATION OF BID PROPOSALS

A. The base bid shall be irrevocable for a period of thirty (30) days from the date and time of bid opening.

B. The base bid may be adjusted for alternate prices and / or unit prices for a period of sixty (60) days from the date and time of bid opening.

1.12 CONTRACT AND BOND

A. Within ten (10) days after receipt of Notice of Award, any bidder to whom a contract is awarded shall execute a formal written contract and shall furnish corporate surety bonds with a surety company satisfactory to the District in an amount equal to the full contract sum based upon the estimated quantities of items covered by the contract for the faithful performance of said contract and all provisions thereof; provided, the formation of said contract shall not be completed and the District shall not be liable thereon until said formal written contract has been executed both by the successful bidder and by the District and a performance bond and a payment bond, properly executed has been delivered and accepted by the District.

B. The cashiers check or bid bond of the bidder with whom a contract is entered into will be returned when said contract has been properly executed by the bidder and said performance and payment bond, properly executed, has been delivered to and accepted by the District. The cashiers check or bid bond to each bidder who was not awarded a contract will be returned promptly after the contract and bond of the successful bidder, properly executed, has been delivered to and accepted by the District.

C. Any bidder to whom a contract is awarded and who shall default in executing said formal written contract or in furnishing a satisfactory performance and payment bond within the time and in the manner required by these specifications shall be liable to the District for whatever damages, including expenses and attorney's fees as may be incurred by the District in recovering to another bidder whether by a single action or by successive actions, shall not operate to release any defaulting bidder from said liability. The parties agree that the cashiers check or bid bond amount is fair determination of the amount of damages which the District would incur as a result of any such failure on the part of the bidder and the full amount will be forfeited as liquidated damages and will not constitute a penalty. In the event competent tribunal finds that this amount does not properly represent an award of liquidated damages, expenses and attorney's fees incurred by the District as a result of the bidder's default, then the final determination of the tribunal shall be deemed to represent the damages, expenses and attorneys fees incurred by the District as a result of the bidder's default.

1.13 SUBSTANTIAL COMPLETION AND LIQUIDATED DAMAGES

A. Substantial Completion shall occur by **September 3, 2021**

B Should the building not be ready for occupancy by the time and date listed above, liquidated damages to be paid by the Contractor to the Owner for each calendar day of delay, shall be included in the terms of any contract awarded hereunder in lieu of a penalty. The amount of liquidated damages shall be $1,000.00 per day.

1.14 DISTRICT PERSONNEL EXCLUDED FROM THE CONTRACT

A. No officer, agent or employee of the District shall be permitted any interest in the contract.

1.15 RESERVATIONS

A. The Board of Directors of Ashland School District, expressly reserves the following rights:

1. To reject all bids
2. To waive any or all irregularities in bids submitted
3. To consider the responsibility and competency of bidders in making any award
4. In the event two or more bids shall be for the same amount for the same Work, to award the contract by lot or otherwise as it deems appropriate
5. To award contract to one Contractor with the aggregate low bid
6. To reject any bid or bids not in compliance with prescribed bidding procedures and requirements
7. To reject any bid or bids not meeting the specifications set forth herein
8. In the event any bidder to whom a contract is awarded shall default in executing said formal contract or in furnishing a satisfactory performance and payment bond within the time and in the manner herein before specified, to re-award the contract to another bidder.
9. To accept Alternates in any order or combination, and to determine the low Bidder on the basis of the sum of the Base Bid and Alternates accepted.

1.16 ACCEPTANCE OF CONDITIONS

A. Each bidder by submission of a bid assents to each and every term and condition set forth anywhere in these contract documents and agrees to be bound thereby.

1.17 INTERPRETATION UPON CONTRACT DOCUMENTS

A. Only the Board of Directors of Ashland School District as represented by the Project Manager has authority to place any interpretation upon the foregoing or annexed contract documents. Any interpretation, either verbal or written, attempted to be placed thereon by any other person will not be binding upon the District.

1.18 EQUAL EMPLOYMENT

A. All bidders shall comply with the Provision of Executive Order 1246 (30 F.R. 12319-25) regarding Equal Employment Opportunity.

1.19 IMMIGRATION REFORM AND CONTROL ACT

A. All bidders shall comply with the provisions of the Immigration Reform and Control Act of 1986 regarding the verification of employment eligibility.

1.20 REFERENCES REQUIREMENTS

A. All bidders shall provide a list of three different project references for projects that the Contractor worked on within the last three years of comparable size and scope.

B. Bidders shall use their own form to supply their list of references. The list of project references shall include the following information:

1. Name of the Project

2. Project description

3. Project location

4. Project date

5. Dollar value of the Project

6. Name of the project contact person

7. Telephone number for contact person

8. Fax number for contact person

C. The references will be checked to determine if they are supportive of the bidder's ability to meet the requirements of this ITB.

D. The bidder must provide references that can be contacted regarding the quality of workmanship, level of service provided, timeliness of completion, and adherence to specifications.

E. The District reserves the right to choose and investigate any reference whether or not furnished by the bidder, and to investigate past performance of any bidder with respect to its successful performance on similar projects, its completion or delivery of service on schedule, and its lawful payment of suppliers, Subcontractors, and employees.

F. The District may postpone the award or execution of the Contract after the announcement of the apparent successful Contractor in order to complete its investigation. The School District may reject a bid if, in the opinion of the School District the overall reference responses indicate inadequate performance of the Contractor.

G. The District representative will make three attempts to contact the references from the list provided by the Contractor. If the reference is not contacted after three attempts that reference will be removed from the list and the bid rejected as non-responsive.

H. Each reference contacted shall be asked the same questions, including but not limited to: (1) quality of service; (2) delivery; (3) responsiveness to reported problems, including orders and billing; (4) how well the Contractor met the terms of the contract; and (5) whether or not the reference would choose to hire the Contractor again.

1.21 CRIMINAL HISTORY CHECK / PHOTO ID

A. It is the responsibility of the Contractor to submit the names of all Contractor employees and all Subcontractor employees who will be on the job site for more than one day. These employees shall fill out a criminal history form provided by the District and the Contractor must submit the completed forms to HMK Company (HMKCO). Criminal history checks will be run through the Oregon State Police as provided for in ORS 326.603. The District shall bear the cost of processing such Criminal history checks.

1. Through the signature on the criminal history form, authorization is also given to HMK Company and its representative to investigate this information. Further, with this signature, consent is given to all governmental agencies, public or private companies and individuals to release information regarding the individual to the HMK Company and to their representative. The District shall bear the cost of processing such Criminal history checks.

B. In accordance with ORS 326.603(8) the District is required to terminate the employment or contract status of any individual who refuses to consent to a criminal history check of to be fingerprinted or falsely swears to the non-conviction of any crime.

C. In accordance with ORS 326.603(7)(a) no individual found to have been convicted of any crime listed in ORS 342.143 or of an attempt to commit one of the listed crimes shall be allowed to work on any District site.

1. It is vital that employees are instructed to accurately complete criminal history forms. Crimes listed in ORS 342.143 which automatically bar an individual from employment with or contracting with the District are primarily crimes of violence, crimes against children, and sex related crimes. However, falsely swearing that you have not been convicted of a crime obligates the District to terminate employment or contract status even if the crime is not listed in ORS 342.143.

D. No Employee shall have direct contact with students.

E. All employees working on site for more than one day shall wear a Name and Photo Identification Badge. Any employee on site for less than one day shall wear a visitor badge. Badges shall be the responsibility of the Contractor to provide. Badge shall state the Ashland School District, name of the project, employee name, and company they represent.

1.22 TOBACCO FREE EDUCATION FACILITY

A. All bidders shall comply with OAR 581.021.0110 and ORS 326.051 regarding Tobacco Use on Public Grounds.

B. For the purpose of this document “tobacco” is defined to include any lighted or unlighted cigarette, cigar, pipe, clove cigarette, and any other smoking product, spit tobacco, also known as smokeless, dip, chew, snuff, in any form, nicotine or nicotine delivering devices, chemicals or devices that produce the physical effect of nicotine substances or any other tobacco substitute (e.g., e-cigarettes). This does not include FDA approved nicotine replacement therapy products used for the purpose of cessation.

C. No employee, sub-contractor, material supplier, or project visitor is permitted to smoke, inhale, dip, or chew or sell tobacco at any time, including non-education hours.

1. In any building, facility; or

2. On education facility grounds, athletic grounds, or parking lots.

END OF SECTION

DATE:_____

LEGAL NAME OF BIDDER:_____

To: Jackson County School District 5
Board of Directors
885 Siskiyou Blvd
Ashland, Oregon 97520

The Undersigned, having examined the Contract Documents, including the Bidding and Contract Requirements, the General Requirements, the Technical Specifications entitled:

WILLOW WIND RENOVATION

As prepared by arkitek:design&architecture, llc and Ashland School District, as well as the premises and conditions affecting the Work, hereby proposes and agrees to perform, within the time stipulated, the Work, including all its component parts, and everything required to be performed, and to provide and furnish all labor, material, tools, expendable equipment, transportation and all other services required to perform the Work and complete in a workmanlike manner ready for use, all as required by and in strict accordance with the Contract Documents for the sums computed as follows:

BASE BIDS:

Project: Willow Wind Renovation

_____DOLLARS $_____

which lump sums are hereby designated as BASE BIDS,

TIME OF COMPLETION

The Undersigned agrees if awarded the Contract to complete all the Work in an acceptable manner in conformance with the Contract Documents and within the time specified.

ADDITIONAL REQUIREMENTS

1. The Undersigned agrees that the enclosed Bid Guarantee (bid bond, certified or cashier's check) in the amount of ten percent (10%) of the Basic Bid sum made payable to the Owner, shall be kept in escrow with the Owner; that its amount shall be a measure of liquidated damages the Owner will sustain by failure of the Undersigned to execute agreement and furnish bond, and that if the Undersigned fails to deliver the prescribed bond within ten (10) calendar days after receipt of the written notice of award, then the Bid Guarantee shall become the property of the Owner.

2. Should this proposal not be accepted within thirty (30) calendar days after the date and time of bid opening, or if the Undersigned executes Agreement and delivers bond, the Bid Guarantee shall be returned.

3. Contractor's State of Oregon Contractors' License Registration Number. _____

4. Receipt of Addenda numbered _____ is hereby acknowledged.

5. The undersigned certifies that the Bidder is a _____ Bidder as defined in ORS 279A.120. ("Resident" or "Non-Resident", to be filled in by Bidder)

6. References are to be submitted with Bid Form as per Section 00 2113, 1.20.

SIGNATURES

_____
Legal Name of Bidder's Firm

By:_____ Title:_____

Address:_____ Telephone:_____

State of Incorporation, if Corporation:_____

Names of Partners, if Partnership:

_____ _____

Signed By_____

_____
Printed Name of Bidder / Firm

Bids which are submitted by Bid Closing, but for which a required disclosure submittal has not been made by the specified Disclosure Deadline, are not responsive and shall not be considered for Contract award.

AGENCY SUPPLIED INFORMATION:

PROJECT NAME: **Willow Wind Renovation**

BID #: ____N/A_____BID CLOSING: Date: **March 9, 2021** Time: **2:00 PM**
REQUIRED DISCLOSURE DEADLINE: Date: **March 9, 2021** Time: **4:00 PM**
Deliver Form To (Agency): Jackson County School District 5
Designated Recipient (Person): Mike Freeman, Project Manager
Agency's Address: 46 N Front Street, Suite 201
Medford, OR 97501
Email to: mike.freeman@hmkco.org

INSTRUCTIONS:

The contracting agency will insert "N/A" below if the contract value is not anticipated to exceed $100,000. Otherwise, this form must be submitted either with the bid or within **TWO (2)** working hours after the advertised bid closing date and time;

FAILURE TO SUBMIT THIS FORM BY THE DISCLOSURE DEADLINE WILL RESULT IN A NON-RESPONSIVE BID. A NON-RESPONSIVE BID WILL NOT BE CONSIDERED FOR AWARD.

It is the responsibility of bidders to submit this disclosure form and any additional sheets, with the bid number and project name clearly marked, and must be submitted at the location specified in the Invitation to Bid on the advertised bid closing date and within two (2) working hours after the advertised bid closing time at the location indicated by the specified disclosure deadline. See "Instructions to Bidders".

List below the name of each subcontractor that will be furnishing labor or materials and that is required to be disclosed, the category of work that the subcontractor will be performing and the dollar value of the subcontract. Enter" NONE" if there are no subcontractors that need to be disclosed. (ATTACH ADDITIONAL SHEETS IF NEEDED).

BIDDER DISCLOSURE:

SUBCONTRACTOR NAME	DOLLAR VALUE	CATEGORY OF WORK
1)		
2)		
3)		
4)		
5)		
6)		
7)		

8)		
9)		
10)		
11)		
12)		
13)		
14)		
15)		
16)		

The above listed first-tier subcontractor(s) are providing labor, or labor and material, with a Dollar Value equal to or greater than:

a) Five percent (5%) of the total Contract Price, but at least $15,000. (If the Dollar Value is less than $15,000, do not list the subcontractor above);

or

b) $350,000 regardless of the percentage of the total Contract Price.

Form Submitted By (Bidder Name): _____

Contact Name: _____

Phone #: _____

END OF SECTION

AGREEMENT made as of the___ day of _____, 2021, between **JACKSON COUNTY DISTRICT 5** (hereinafter "the Owner") **and** _____, (hereinafter "the Contractor").

The Project is: Jackson County School District 5
Willow Wind Renovation

The Owner is: Jackson County School District 5
Steve Mitzel, Program Executive
885 Siskiyou Blvd
Ashland, OR 97520

The Architect is: arkitek:design&architecture
Chris Brown, Principal
426 A Street
Ashland, OR 97520

The Contractor is: **To Be Determined**

The Owner and Contractor agree as follows:

ARTICLE 1 THE CONTRACT DOCUMENTS

The Contract Documents consist of this Agreement, the General Conditions of the Contract, any Supplementary, or other Conditions, Drawings, Specifications, Addenda issued prior to execution of this Agreement, other documents listed in this Agreement and Modifications issued after execution of this Agreement; these form the Contract, and are incorporated by this reference herein. The Contract represents the entire and integrated agreement between the parties and supersedes prior negotiations, representations or agreements, either written or oral. An enumeration of the Contract Documents, other than Modifications, appears in Article 8.

ARTICLE 2 THE WORK OF THIS CONTRACT

The Contractor shall fully execute the Work described in the Contract Documents, including such construction activity as is reasonably inferable from the Contract Documents as necessary to produce the results intended by the Contract Documents, except to the extent specifically indicated in the Contract Documents to be the responsibility of others.

ARTICLE 3 DATE OF COMMENCEMENT AND SUBSTANTIAL COMPLETION

3.1 The date of commencement of the Work shall be the date of the date to be fixed in a notice to proceed issued by the Owner, which shall be issued no less than two (2) days prior to the date of commencement.

3.2 The Contract Time shall be measured from the date of commencement.

3.3 The Contractor shall continuously and diligently prosecute the Work and shall achieve Substantial Completion of the entire Work not later than **September 3, 2021**, subject to approved adjustments of this Contract Time as provided in the Contract Documents.

3.4. If the Contractor fails to achieve Substantial Completion of the Work within the Contract Time and as otherwise required by the Contract Documents, the Owner shall be entitled to recover from the Contractor as liquidated damages and not as a penalty $1,000.00 per day which shall commence on the first day following the expiration of the Contract Time and continuing until the date of Substantial Completion. Such liquidated damages are hereby agreed to be a reasonable estimate of the damages the Owner will incur as a result of delay in the completion of the Work. The Owner may deduct any accrued liquidated damages from any unpaid amount due or to become due to the Contractor. Any Liquidated damages not so deducted shall be paid to the Owner upon demand together with interest as provided by Oregon law.

ARTICLE 4 CONTRACT SUM

4.1 The Owner shall pay the Contractor the Contract Sum in current funds for the Contractor's proper and timely performance of the Contract and full and final completion of the Work. The Contract Sum shall be _____ DOLLARS AND XX/100 ($_____). This sum includes all general conditions, profit, overhead and all other amounts due or to become due to the Contractor for the proper and timely performance of the Contract and full and final completion of the Work. The Contract sum is subject to authorized additions and deductions as provided in the Contract Documents.

4.2 PERMITS, FEES AND NOTICES

4.2.1 The Contractor shall secure and pay for:

.1 All pertinent specialty permits. (The owner is securing and paying for the plan review, building permit, and system development fees.)

4.2.2 The Contractor will be responsible for any renewals of and penalties arising from the building permit and from all other permits and governmental or utility fees. The Contractor shall secure and pay for all other permits and governmental fees, licenses and inspections necessary for proper execution and completion of the Work which are customarily secured after execution of the Contract and which are legally required when bids are received or negotiations concluded, including without limitation electrical, sewer, water, and plumbing permits and fees.

4.3 The Contract Sum is based upon the following alternates, if any, which are described in the Contract Documents and are hereby accepted by the Owner:

4.4 Unit prices, if any, are as follows: See Section 00 4100, Bid Form

ARTICLE 5 PAYMENTS

5.1 PROGRESS PAYMENTS

5.1.1 Based upon Applications for Payment which include all the necessary supporting documentation is received by the Owners Delegated Representative, and Owner not later than the first day of the month, and Certificates for Payment are issued by the Owners Delegated Representative, the Owner shall make progress payments on account of the Contract Sum to the Contractor as provided below and elsewhere in the Contract Documents.

5.1.2 The period covered by each Application for Payment shall be one calendar month ending on the last day of the month, or as follows:

5.1.3 Provided that an Application for Payment and all supporting documentation, including all full and unconditional lien waivers related to the Work for which payment is requested is received by the Owners Delegated Representative and Owner not later than the first day of a month, the Owner shall make payment

to the Contractor not later than the last day following the Owners Delegated Representative's approval. If an Application for Payment is received by the Owners Delegated Representative after the application date fixed above, payment shall be as set forth below.

5.1.4 Each Application for Payment shall be based on the most recent schedule of values submitted by the Contractor in accordance with the Contract Documents. The schedule of values shall allocate the entire Contract Sum among the various portions of the Work. The schedule of values shall be prepared in such form and supported by such data to substantiate its accuracy as the Owners Delegated Representative and any Lender may require. This schedule, unless objected to by the Owners Delegated Representative, shall be used as a basis for reviewing the Contractor's Applications for Payment, provided, however, in no instance shall the schedule of values ever exceed the reasonable value of the Work performed.

5.1.5 Applications for Payment shall indicate the percentage of completion of each portion of the Work as of the end of the period covered by the Application for Payment.

5.1.6 Unless otherwise provided in the Owner's agreement with any Lender, and subject to other provisions of the Contract Documents, the amount of each progress payment shall be computed as follows:

.1 Take that portion of the Contract Sum properly allocable to completed Work as determined by multiplying the percentage completion of each portion of the Work by the share of the Contract Sum allocated to that portion of the Work in the schedule of values, less retainage of Five percent (5%). Pending final determination of cost to the Owner of changes in the Work, amounts not in dispute shall be included as provided in Subparagraph 7.3.8 of the General Conditions, or as modified by the parties;

.2 Add that portion of the Contract Sum properly allocable to materials and equipment delivered and suitably stored at the site for subsequent incorporation in the completed construction (or, if approved in advance by the Owner, suitably stored off the site at a location agreed upon in writing), less retainage of five percent (5%);

.3 Subtract the aggregate of 9.5 previous Payments made by the Owner; and

.4 Subtract amounts, if any, for which the Owners Delegated Representative has withheld or nullified a Certificate for Payment as provided in Paragraph 9.5 of the General Conditions.

or as modified by the parties.

5.1.7 The progress payment amount determined in accordance with Subparagraph 5.1.6 shall be further modified under the following circumstances:

.1 Add, upon Substantial Completion of the Work, a sum sufficient to increase the total payments to the full amount of the Contract Sum, less such amounts as the Owners Delegated Representative, any Lender or the Owner shall determine for incomplete Work, retainage applicable to such Work and unsettled claims;

.2 Add, if final completion of the Work is thereafter materially delayed through no fault of the Contractor, any additional amounts payable in accordance with Subparagraph 9.10.3 of the General Conditions.

5.1.8 Reduction or limitation of retainage, if any, shall be as follows:

5.1.9 Except with the Owner's prior written approval, the Contractor shall not make advance payments to suppliers for materials or equipment which have not been delivered and stored at the site.

5.1.10 Contractor shall:

.1 Make payment promptly, as and when due, to all persons supplying to labor, materials, equipment or services;

.2 Pay all contributions or amounts due the Industrial Accident Fund from Contractor or any Subcontractor incurred in the performance of the Work;

.3 Not permit any lien or claim to be filed or prosecuted against the Owner, on account of any labor, materials, equipment or services furnished, supplied or provided;

.4 Pay to the Department of Revenue all sums withheld from employees pursuant to ORS 316.167;

.5 Demonstrate that an employee drug testing program as set forth herein is in place for Contractor and all Subcontractors pursuant to ORS 279C.505;

.6 To the extent that any demolition is included as a part of the Work, salvage or recycle construction and demolition debris, if feasible and cost-effective;

.7 To the extent that any lawn or landscape maintenance is included as a part of the Work, compost or mulch yard waste material at an approved site, if feasible and cost-effective.

5.1.11 If the Contractor fails, neglects or refuses to make prompt payment of any claim for labor or services furnished to the Contractor or any Subcontractor by any person in connection with the Work as such claim becomes due, the proper officer or officers representing the Owner may pay such claim to the person furnishing the labor or services and charge the amount of the payment against funds due or to become due the Contractor by reason of this Agreement.

5.1.12 If the Contractor or a first-tier Subcontractor fails, neglects or refuses to make payment to a person furnishing labor or materials in connection with the Work within 30 days after receipt of payment from the Owner or the Contractor, the Contractor or first-tier Subcontractor shall owe the person the amount due plus interest charges commencing at the end of the 10-day period that payment is due under ORS 279C.505 and 279C.580 and ending upon final payment, unless payment is subject to a good faith dispute as defined in ORS 279C.505 and 279C.580. The rate of interest charged to the Contractor or first-tier Subcontractor on the amount due shall equal three times the discount rate on 90-day commercial paper in effect at the Federal Reserve Bank in the Federal Reserve district that includes Oregon on the date that is 30 days after the date when payment was received from the Owner or from the Contractor, but the rate of interest shall not exceed 30 percent. The amount of interest may not be waived.

5.1.13 If the Contractor or a Subcontractor fails neglects or refuses to make payment to a person furnishing labor or materials in connection with the Work, the person may file a complaint with the Construction Contractors Board, unless payment is subject to a good faith dispute as defined in ORS 279C.505 and 279C.580.

5.1.14 The payment of a claim in the manner authorized in this Agreement shall not relieve the Contractor or the Contractor's surety from obligation with respect to any unpaid claims.

5.1.15 No person shall be employed by the Contractor or any Subcontractors, which are subject to the statutory limitations of Oregon law for more than ten (10) hours in any one (1) day, or 40 hours in any one

(1) week, except in cases of necessity, emergency, or where the public policy absolutely requires it, and in such cases, the employee shall be paid at least time and a half pay:

.1 For all overtime in excess of eight (8) hours a day or 40 hours in any one (1) week when the work week is five (5) consecutive days, Monday through Friday; or

.2 For all overtime in excess of ten (10) hours a day or 40 hours in any one (1) week when the work week is four (4) consecutive days, Monday through Friday; and

.3 For all Work performed on Saturday and on any legal holiday specified in ORS 279.334.

5.1.16 The Contractor shall give notice to employees in writing, either at the time of hire or before commencement of Work on the Project, or by posting a notice in a location frequented by employees, of the number of hours per day and days per week that the employees may be required to work. The Contractor shall include an identical provision in its subcontracts and require all Subcontractors, of any tier, to include an identical provision in all subcontracts.

5.1.17 The Contractor shall promptly, as and when due, make payment to any person, co-partnership, association or corporation, furnishing medical, surgical and hospital care or other needed care and attention, incident to sickness or injury, to the employees of the Contractor, of all sums which the Contractor agrees to pay for such services and all moneys and sums which Contractor collected or deducted from the wages of employees pursuant to any law, contract or agreement for the purpose of providing or paying for such service.

5.1.18 Every Subcontractor will comply with ORS 656.017, unless it is an exempt employer under ORS 656.126.

5.1.19 The Contractor is not a contributing member to the Public Employees' Retirement System and will be responsible for any and all federal, state and local taxes applicable to payments received under this Agreement. The Contractor will not be eligible for any benefits from these contract payments of federal Social Security, employment insurance, Workers' Compensation or the Public Employees' Retirement System.

5.1.20 The hourly rate of wage to be paid by the Contractor or every Subcontractor subject to prevailing wage rates to workers, shall be not less than the prevailing rate of wage for an hour's work in the same trade or occupation in the locality where such labor is performed.

5.1.21 The Contractor and every Subcontractor subject to prevailing wage rates to employees shall keep the prevailing wage rates for that project posted in a conspicuous and accessible place in or about the project.

5.1.22 The Contractor and every Subcontractor subject to prevailing wage rates to employees and shall also provide for or contribute to a health and welfare plan or a pension plan, or both, for its employees on the Project and shall post notice describing such plans in a conspicuous and accessible place in or about the Project. The notice preferably shall be posted in the same place as the notice required under 5.1.16. In addition to the description of the plans, the notice shall contain information on how and where to make claims and where to obtain further information.

5.1.23 The Contractor represents and agrees that the specifications contain a sufficient provision stating the existing prevailing rate of wage which must be paid to workers in each trade or occupation required for such public work employed in the performance of the Work either by the Contractor or any Subcontractor or other person doing or contracting to do the whole or any part of the Work contemplated by the contract. Such workers shall be paid not less than such specified minimum hourly rate of wage.

5.1.24 The District represents and agrees that the specifications contain a sufficient provision stating that a fee is required to be paid to the Commissioner of the Bureau of Labor and Industries as provided in ORS 279C.825. The fee shall be paid to the commissioner pursuant to the administrative rule of the commissioner.

5.1.25 The Contractor or the Contractor's surety and every Subcontractor or Subcontractor's surety subject to prevailing wage rates shall file certified statements with the Owner in writing in the form prescribed by the Commissioner of the Bureau of Labor and Industries, certifying the hourly rate of wage paid each worker which Contractor or the Subcontractor has employed upon such public work, and further certifying that no worker employed upon such public work has been paid less than the prevailing rate of wage or less than the minimum hourly rate of wage specified in the contract, which certificate and statement shall be verified by the oath of Contractor or the Contractor's surety or Subcontractor or the Subcontractor's surety that the Contractor or Subcontractor has read such statement and certificate and knows the contents thereof and that the same is true to the Contractor's or subcontractor's knowledge. The certified statements shall set out accurately and completely the payroll records for the prior week including the name and address of each worker, the worker's correct classification, rate of pay, daily and weekly number of hours worked, deductions made and actual wages paid. Each certified statement required shall be delivered or mailed by Contractor or the Subcontractor to the public contracting agency. Certified statements for each week, during which the Contractor or the Subcontractor employs a worker upon the Project shall be submitted once a month, by the fifth (5th) business day of the following month.

5.1.26 The Contractor or Subcontractor shall preserve the certified statements for a period of three (3) years from the date of completion of the contract.

5.1.27 Per ORS 279C.855, the Contractor represents and agrees that the Owner has fully and timely included a provision in the Contract Documents that the Contractor and any Subcontractor shall comply with ORS 279C.840 in the invitation for bids, the request for bids, the contract specifications, the accepted bid or elsewhere in the Contract Documents and that the Owner has no liability for unpaid minimum wages.

5.1.28 Owner shall make progress payments on the contract monthly as Work progresses. Payments shall be based upon estimates of Work completed that are approved by the Owner. A progress payment shall not be considered acceptance or approval of any Work or waiver of any defects therein. In instances when an invoice is filled out incorrectly, or when there is any defect or impropriety in any submitted invoice or when there is a good faith dispute, the Owner shall so notify the Contractor within 15 days stating the reason or reasons the invoice is defective or improper or the reasons for the dispute. A defective or improper invoice, if corrected by the Contractor within seven days of being notified by the Owner, shall not cause a payment to be made later than specified in this section.

5.1.29 If requested in writing by a first-tier Subcontractor, Contractor, within ten (10) calendar days after receiving the request, shall send to the first-tier Subcontractor a copy of that portion of any invoice, request for payment submitted to the Owner or pay document provided by the Owner to the Contractor specifically related to any labor or materials supplied by the first-tier Subcontractor.

5.1.30 Payment of interest may be postponed when payment on the principal is delayed because of disagreement between Owner and Contractor.

5.1.31 The Owner may reserve as retainage from any progress payment an amount not to exceed five percent of the payment. As Work progresses, the Owner may in its sole discretion reduce the amount of the retainage and the Owner may in its sole discretion eliminate retainage on any remaining monthly contract payments after 50 percent of the Work under the contract is completed if, in the Owner's sole opinion, such Work is progressing satisfactorily. Elimination or reduction of retainage shall be allowed only upon written application by the Contractor, which application shall include written approval of the Contractor's surety; except that when the contract Work is 97-1/2 percent completed the Owner may, at its discretion and without application by the Contractor, reduce the retained amount to 100 percent of the value

of the Work remaining to be done. Upon receipt of a written application by the Contractor, the Owner shall respond in writing within a reasonable time.

5.1.32 The retainage held by the Owner shall be included in and paid to the Contractor as part of the final payment of the contract price. The Contractor shall notify the Owner in writing when the Contractor considers the Work complete and the Owner shall, within 15 days after receiving the written notice, either accept the Work or notify the Contractor of Work yet to be performed on the contract.

5.1.33 The Contractor shall not request payment from the Owner of any amount withheld or retained in accordance herewith.

5.1.34 Such time as the Contractor has determined and certified to the Owner that the Subcontractor is entitled to the payment of such amount. A dispute between the Contractor and a first-tier Subcontractor relating to the amount or entitlement of a first-tier Subcontractor to a payment or a late payment interest penalty under a clause included in the subcontract pursuant to the terms hereof does not constitute a dispute to which the Owner is a party. The Owner shall not be included as a party in any administrative or judicial proceeding involving such a dispute. The Contractor shall include in each subcontract for property or services entered into by the Contractor and a first-tier Subcontractor, including a material supplier, for the purpose of performing a construction contract:

.1 A payment clause that obligates the Contractor to pay the first-tier Subcontractor for satisfactory performance under its subcontract within ten (10) days out of such amounts as are paid to the Contractor by the Owner under such contract; and

.2 An interest penalty clause that obligates the Contractor, if payment is not made within 30 days after receipt of payment from the Owner, to pay to the first-tier Subcontractor an interest penalty on amounts due in the case of each payment not made in accordance with the payment clause included in the subcontract pursuant to subparagraph .1 of this 5.1.34. The Contractor or first-tier Subcontractor shall not be obligated to pay an interest penalty if the only reason that the Contractor or first-tier Subcontractor did not make payment when payment was due is that the Contractor or first-tier Subcontractor did not receive payment from the Owner or the Contractor when payment was due. The interest penalty shall be:

(A) For the period beginning on the day after the required payment date and ending on the date on which payment of the amount due is made; and

(B) Computed at the rate specified in ORS 279C.515(2).

5.1.35 The Contractor shall include in each of its subcontracts, for the purpose of performance of such contract condition, a provision requiring the first-tier Subcontractor to include a payment clause and an interest penalty clause conforming to the standards of 5.1.33 in each of its subcontracts and to require each of its Subcontractors to include such clauses in their subcontracts with each lower-tier Subcontractor or supplier.

5.1.36 If the Contractor is an employer, the Contractor is a subject employer under Oregon's Workers' Compensation Law and shall comply with ORS 656.017 and shall provide Workers' Compensation coverage for all their "subject workers" as defined in ORS Chapter 656.

5.1.37 The Contractor and all Subcontractors subject to licensing with the Oregon Construction Contractors Board shall be duly licensed therewith at the time they bid any Work, enter into any contract to perform any Work, perform any Work and at all times under which any warranty or repair obligation applies. The Contractor and all Subcontractors performing any Work which requires any other governmental licensing, such as those with the Elevator and Electrical Board, Plumbing Board or Landscape Contractors Board, shall be duly licensed with all appropriate governmental agencies at the time they bid any Work, enter into

any contract to perform any Work, perform any Work and at all times under which any warranty or repair obligation applies.

5.1.38 If federal funds are involved, federal laws, rules and regulations applicable to the grant shall govern in the event they conflict with any provision of this Agreement or other required by law. The Contractor certifies that it is not currently employed by the federal government. This provision does not preclude the Contractor from holding another contract with the federal government.

5.1.39 The Contractor shall timely provide the Owner its name, address, social security, federal employee identification number and such other information as the Department of Revenue may require or request.

5.1.40 The Contractor shall comply and require all Subcontractors to comply with the applicable requirements of all laws, codes, ordinances, regulations and statutes, including but not limited to those in ORS Chapters 279A, B and C. To the extent that ORS Chapters 279A, B and C, or any other law, code, ordinance or regulations, requires any tender or condition to be included in this Agreement, such tender or condition is hereby incorporated by this reference. Nothing contained herein shall be construed so as to require the commission of any act contrary to law, code, rule, statute, ordinance or regulation, and wherever there is any conflict between any provisions contained herein and any statute, law, code, ordinance, rule or regulation the provision of this Agreement which is affected shall be curtailed and limited only to the extent necessary to bring it within the requirements of the law, code, rule, statute, ordinance or regulation.

5.1.41 If the Contractor is a foreign Contractor and the contract price exceeds $10,000, the Contractor shall promptly report to the Department of Revenue on forms to be provided by the Department of Revenue the total contract price, terms of payment, length of contract and such other information as the Department of Revenue may require before final payment can be received on the public contract. For purposes of this A.3 I, a foreign Contractor is one who is not domiciled in or registered to do business in the State of Oregon.

5.1.42 The Contractor represents and agrees that the bid documents make sufficient specific reference to federal, state and local agencies that have enacted ordinances or regulations dealing with the prevention of environmental pollution and the preservation of natural resources that affect the performance of the contract and have allocated all known environmental and natural resource risks to the Contractor by listing such environmental and natural resource risks with specificity in the bid documents.

5.1.43 The Contractor shall not discriminate against minority, women or emerging small business enterprises in the awarding of subcontracts. The Contractor shall certify that the Contractor has not and will not discriminate against minority, women, or emerging small business enterprises in obtaining any required subcontracts.

5.1.44 The Contractor shall use recyclable products to the maximum extent economically feasible in the performance of the Contract Work set forth in this document.

5.1.45 As referenced herein, an employee drug testing policy shall be as follows:

.1 The Contractor or Subcontractor shall have in place at the time of the execution of this Contract, and shall maintain during the term of this Contract, a Qualifying Employee Drug Testing Program for its employees that includes, at a minimum, the following:

(A) A written employee drug testing policy;

(B) Required drug testing for all new Subject Employees or, alternatively, required testing of all Subject Employees every 12 months on a random selection basis; and

(C) Required testing of a Subject Employee when the Contractor or Subcontractor has reasonable cause to believe the Subject Employee is under the influence of drugs.

A drug testing program that meets the above requirements will be deemed a "Qualifying Employee Drug Testing Program." For the purposes of this section an employee is a "Subject Employee" only if that employee will be working on the Project job site.

.2 The Contractor shall require each Subcontractor providing labor for the Project to:

(A) Demonstrate to the Contractor that it has a Qualifying Employee Drug Testing Program for the Subcontractor's Subject Employees, and represent and warrant to the Contractor that the Qualifying Employee Drug Testing Program is in place at the time of subcontract execution and will continue in full force and effect for the duration of the subcontract; or

(B) Require that the Subcontractor's Subject Employees participate in Contractor's Qualifying Employee Drug Testing Program for the duration of the subcontract.

5.2 FINAL PAYMENT

5.2.1 Final payment, constituting the entire unpaid balance of the Contract Sum, shall be made by the Owner to the Contractor when:

.1 A final Certificate for Payment has been issued by the Owners Delegated Representative.

5.2.2 The Owner's final payment to the Contractor shall be made no later than 30 days after the issuance of the Owners Delegated Representative's final Certificate for Payment.

ARTICLE 6 TERMINATION OR SUSPENSION

6.1 The Contract may be terminated by the Owner or the Contractor as provided in Article 14 of the General Conditions.

6.2 The Work may be suspended by the Owner as provided in Article 14 of the General Conditions.

6.3 The Owner shall, in addition to the Right to Stop the Work, have the right to require that the Contractor replace or remove construction personnel assigned to the Work, if, in the Owner's sole determination, specific construction personnel are impairing or impeding the prosecution of the Work.

ARTICLE 7 MISCELLANEOUS PROVISIONS

7.1 Where reference is made in this Agreement to a provision of the General Conditions or another Contract Document, the reference refers to that provision as amended or supplemented by other provisions of the Contract Documents.

7.2 Payments due and unpaid under the Contract shall bear interest from the date payment is due at the rate stated below, or in the absence thereof, at the legal rate prevailing from time to time at the place where the Project is located.

7.3 The Owner's representative is: Mike Freeman, Project Manager, HMK Company. The Owner may change this representative at any time.

7.4 The Contractor's Representative is: _____.

7.5 Neither the Owner's nor the Contractor's Representative shall be changed without ten (10) days written notice to the other party.

7.6 CONTRACTOR'S CONSTRUCTION SCHEDULES

7.6.1 Within ten (10) days after issuance of the Notice to Proceed, the Contractor shall submit a preliminary schedule of the Work. Within 30 days after issuance of the Notice to Proceed, and before any progress payment need be made, the Contractor, after consultations with its Subcontractors and Suppliers of any tier, shall submit six copies of a Contractor's Construction Schedule to the Owners Delegated Representative and one copy to the Owner. Not less than ten percent of the Progress Payment may be withheld until a Contractor's Construction Schedule in a form satisfactory to the Owners Delegated Representative and Owner has been submitted. Neither the Owner nor the Owners Delegated Representative will review the substance of the Contractor's Construction Schedule.

7.6.2 The Contractor's Construction Schedule shall be based upon a critical path method ("CPM") analysis of construction activities and sequence of operations needed for the orderly performance and completion of all separable parts of the Work in accordance with the Contract and within the Contract Time. The schedule shall be a critical path method type in the form of a precedence diagram and activity listing, and shall be time-scaled. It shall include the Notice to Proceed date, the Date(s) of Substantial Completion, and the Date(s) of Final Completion in accordance with the Contract Documents. The Critical Path shall be clearly indicated on the Contractor's Construction Schedule. No more than 20% of the progress activities shall be on the critical path, and no more than 30% shall have less than five days of float. The value of any single activity shall not exceed $50,000, except that 5% of the total activities may exceed this limit without prior approval. The time-scaled network diagram shall be summarized on a single sheet not to exceed 11"x 17".

7.6.2.1 The network diagram shall show in detail and in order the sequence of all significant activities, their descriptions, start and finish dates, durations and dependencies, necessary to complete all Work and any separable parts thereof. The activity listing shall show the following information for each activity on the network diagram:

.1 Description;

.2 Duration (not to exceed fifteen working days);

.3 Craft;

.4 Equipment (including hours of usage);

.5 Start and finish dates;

.6 Total float time and free float time;

.7 Dates that work must be performed and completed by other Contractors or Subcontractors to support the Work and the interfaces with such other Contractors; and

.8 Cost-loading, correlated to the Schedule of Values, which, upon approval, shall be used as a basis for determining action on progress payments throughout the Project.

7.6.2.2 A schedule for the purchase and receipt of items required for performance of the Work, showing lead times between purchase order placement and delivery dates, shall be integrated with the Contractor's Construction Schedule. The Contractor shall furnish the Owners Delegated Representative with copies of all purchase orders and acknowledgments and fabrication, production, and shipping

schedules for all major items on the critical path within ten days of the Contractor's receipt of each purchase order, acknowledgment or schedule. Neither the Owners Delegated Representative nor the Owner shall be deemed to have approved or accepted any such material, or its schedule, nor deemed to have waived this requirement if some or all of the material is not received.

7.6.2.3 Milestone completion dates shall be clearly defined on the Contractor's Construction Schedule.

7.6.2.4 If abbreviations are used in the Contractor's Construction Schedule, a legend shall be provided to define all abbreviations.

7.6.2.5 The Contractor shall prepare and keep current a schedule of submittals, coordinated with the Contractor's Construction Schedule, which allows the Owners Delegated Representative at least ten (10) days to review the submittals.

7.6.2.6 The Progress Schedules shall be submitted as both a paper copy and in electronic format using the latest version of Microsoft Project. The Contractor may request to use different project management software, such as, Suretrak, but must first receive approval from the Owner, by demonstrating its capabilities. This can be accomplished by submitting a sample CPM printout of similar scope. If the alternative software is accepted, the Contractor will be required to supply the Owner an authorized copy of the software with all user support manuals.

7.6.2.7 At each monthly meeting with the Owner, the Contractor shall submit (a) a bar chart schedule showing the activities planned for the next month, and (b) a report showing actual starts and finishes from the previous month. The bar-chart schedule shall show all Work activities numbered according to the CPM, any submittal or delivery activities with less than five (5) days, one (1) float, and any permitting, testing, or inspection activities by others.

7.6.3 Within ten days after receipt by the Owners Delegated Representative, two copies of the Contractor's Construction Schedule will be returned to the Contractor with comments, following review by the Owner. Review by the Owner and Owners Delegated Representative of the Contractor's Construction Schedule shall not constitute an approval or acceptance of the Contractor's construction means, methods, or sequencing, or its ability to complete the Work in a timely manner.

7.6.4 The Contractor shall utilize and comply with the Contractor's Construction Schedule. The Contractor shall not be entitled to any adjustment in the Contract Time, the Contractor's Construction Schedule, or the Contract Sum, or to any additional payment of any sort by reason of the loss or use of any float time, including time between the Contractor’s anticipated completion date and end of the Contract Time, whether or not the float time is described as such on the Contractor’s Construction Schedule.

7.6.5 Should the Contractor fail to meet any scheduled date as shown on the current Contractor's Construction Schedule, the Contractor shall, if requested, be required at its own expense to submit within ten days of the request an updated Contractor's Construction Schedule. If the Contractor's progress indicates to the Owner that the Work will not be Substantially Completed within the Contract Time, the Contractor shall, at its own expense, increase its work force and / or working hours to bring the actual completion dates of the activities into conformance with the Contractor's Construction Schedule and Substantial Completion within the Contract Time. The Contractor shall also submit a revised Contractor's Construction Schedule at its own expense within ten days of notice from the Owners Delegated Representative that the sequence of Work varies significantly from that shown on the Contractor's Construction Schedule. Neither the Owner nor the Owners Delegated Representative will, however, review the substance or sequence of the Contractor's Construction Schedule.

7.6.6 Schedule Float Utilization. Float belongs to the benefit of the Project for the Owner’s use and no float shall be used without the Owner’s written approval. Any float time to activities not on the critical path shall be used by the Contractor to optimize its construction process. Any float time between the end of the

final construction activity and the final completion date shall be used by the Owner in determining if additional contract days are to be awarded for changes in the contract or for delays to the contract caused by the Owner. The Contractor will not be entitled to any adjustment in the Contract Time, the Construction Schedule, or the Contract Sum, or to any additional payment of any sort by reason of the Owner's use of float time between the end of the final construction activity and the final completion date.

7.6.7 Delays. The Contractor shall, within seven days of the event, notify the Owner and Owners Delegated Representative in writing of any proposed changes in the Contractor's Construction Schedule or the Contract Time and of any event which could delay performance or supplying of any item of the Work and shall indicate the expected duration of the delay, the anticipated effect of the delay on the Contractor's Construction Schedule, and the action being taken to correct the delay situation. In the event the Contractor is entitled to a change in the Contract Time, the adjustment to the Contract Time shall be limited to the change in the critical path of construction activities.

7.6.8 Final Completion. The Contractor shall attain Final Completion of the Work in accordance with the Contract within 60 days after the date of Substantial Completion.

7.6.9 Meetings. During the period commencing with the issuance of Notice to Proceed and ending with the date of Final Completion of the Work, the Contractor shall attend and participate in and ensure applicable Subcontractors of any tier and Suppliers attend and participate in:

.1 A pre-contract meeting;

.2 A pre-construction meeting;

.3 Regular weekly Project status meetings scheduled by the Owner or by the Owners Delegated Representative to review progress of the Work, to discuss the Contractor's progress reports, to obtain necessary Owner's or Owners Delegated Representative's approvals, and generally to keep the Owner and Owners Delegated Representative informed and involved in the progress of the Project; and

.4 Regular on-site meetings scheduled by the Owner or by the Owners Delegated Representative to review progress of the Work and other pertinent matters.

7.7 Any and all references to "Engineer" or "the Engineer" in this Agreement or in the General Conditions of the Contract shall be deemed for all purposes to mean and refer to: Owners Delegated Representative.

7.8 If any provision of this Agreement or application thereof to any extent shall be invalid or unenforceable the remainder of the Agreement or its application thereof shall not be affected thereby and the provision or application shall be enforced to the fullest extent permitted by law.

7.9 The Contractor shall not assign this Agreement without the prior written permission of the Owner. Contractor shall assign to Owner any and all rights that the Contractor now has or hereafter may acquire pursuant to a contract related to the Project which rights the Owner shall thereafter be entitled to assign to another person or entity including without limitation any Lender, upon the request of the Owner, provided, however, until the exercise of such rights of assignment by the Owner, there shall be no privity or contractual relationship between the Owner and such persons and entities. The Contractor hereby consents to the free assignment of this Agreement in whole or in part by the Owner to any other person or entity including but not limited to any Lender.

7.10 The Contractor represents and warrants to the Owner who relies thereon as follows:

7.10.1 It and all of its Subcontractors are financially solvent, able to pay debts as they become due and have sufficient working capital to timely perform and complete all obligations related to the Project.

7.10.2 That it is able to timely and completely furnish all the labor, material, equipment and services to necessary to fully complete the Work within the Contract Time.

7.10.3 It and all of its Subcontractors are duly and properly licensed with the Oregon Construction Contractors Board and all other governmental agencies and are signatories to collective bargaining agreements.

7.10.4 It has visited the site, undertaken any and all tests it deems advisable, is familiar with the structure and that it is unaware of any potential condition with would increase the Contract Sum or Contract Time.

7.10.5 It and all of its Subcontractors possess a high level of experience and expertise in projects similar to the Project.

7.10.6 Neither Contractor nor any of its Subcontractors are "exempt" from the requirement to provide Workers' Compensation Insurance under Oregon law.

7.10.7 It is fully authorized to execute this Agreement and perform all the obligations required of it hereunder.

7.11 The representations and warranties of 7.11 are in addition to and not in lieu of any other obligation or law and survive the execution of this Agreement and final completion of the Project.

ARTICLE 8 ENUMERATION OF CONTRACT DOCUMENTS

8.1 The Contract Documents, except for Modifications issued after execution of this Agreement, are enumerated as follows:

8.1.1 This Agreement.

8.1.2 The General Conditions.

8.1.3 The Supplementary and other Conditions of the Contract.

8.1.4 The Specifications are those contained in the Project Manual dated February 12, 2021.

8.1.5 The Drawings are bound in the project manual.

8.1.6 The Addenda, if any, are as follows:

Portions of Addenda relating to bidding requirements are not part of the Contract Documents unless the bidding requirements are also enumerated in this Article 8.

8.1.7 Other documents, if any, forming part of the Contract Documents are as follows:

a. Exhibits _____

This Agreement is entered into as of the day and year first written above and is executed in at least three original copies, of which one is to be delivered to the Contractor, one to the Owners Delegated Representative for use in the administration of the Contract, and the remainder to the Owner.

CONTRACTOR		**JACKSON COUNTY SCHOOL DISTRICT 5**	
By:	_____	**By:**	_____
			Alana Valencia
Title:	_____	**Title:**	**Director of Finance**
Date:	_____	**Date:**	_____
Federal ID #:	_____		

ARTICLE 1 GENERAL PROVISION

1.1 BASIC DEFINITIONS

1.1.1 THE CONTRACT DOCUMENTS

The Contract Documents consist of the Agreement between Owner and Contractor (hereinafter the Agreement), the Request for Bids or Proposals. Conditions of the Contract (General, Supplementary and other Conditions), Drawings, Specifications, and Addenda issued prior to execution of the Contract, other documents listed in the Agreement and Modifications issued after execution of the Contract. A Modification is (1) a written amendment to the Contract signed by both parties, (2) a Change Order, (3) a Construction Change Directive or (4) a written order for a minor change in the Work issued by the Consultant. Contractor acknowledges and represents that it has examined all Contract Documents and will examine all Contract Documents created after execution of the Agreement. Contractor represents that such Contract Documents are suitable and sufficient to enable Contractor to timely complete the Work for the Contract Sum within the Contract Time.

1.1.2 THE CONTRACT

The Contract Documents form the Contract for Construction. The Contract represents the entire and integrated agreement between the parties hereto and supersedes prior negotiations, representations or agreements, either written or oral. The Contract may be amended or modified only by a Modification. The Contract Documents shall not be construed to create a contractual relationship of any kind (1) between the Consultant and Contractor, (2) between the Owner and any Subcontractor, including, but not limited to, any Sub-subcontractor, (3) between the Owner and Consultant or (4) between any persons or entities other than the Owner and Contractor. The Consultant shall, however, be entitled to performance and enforcement of obligations under the Contract intended to facilitate performance of the Consultant's duties.

1.1.3 THE WORK

The term "Work" means the construction and services required by the Contract Documents, whether completed or partially completed, and includes any and all labor (including, but not limited to, supervision and management), transportation, materials, equipment and services provided or to be provided by the Contractor to timely fulfill the Contractor's obligations and render the Project complete and usable for its intended purpose. The Work includes all labor, material, equipment and services incidental to or which may be inferred from any of the Contract Documents. The Work may constitute the whole or a part of the Project.

1.1.4 THE PROJECT

The Project is the total construction of which the Work performed under the Contract Documents may be the whole or a part and which may include construction by the Owner or by separate contractors.

1.1.5 THE DRAWINGS

The Drawings are the graphic and pictorial portions of the Contract Documents showing the design, location and dimensions of the Work, generally including plans, elevations, sections, details, schedules and diagrams.

1.1.6 THE SPECIFICATIONS

The Specifications are that portion of the Contract Documents consisting of the written requirements for materials, equipment, systems, standards and workmanship for the Work, and performance of related services.

1.1.7 THE PROJECT MANUAL

The Project Manual is a volume assembled for the Work which may include the bidding requirements, sample forms, Conditions of the Contract and Specifications.

1.2 CORRELATION AND INTENT OF THE CONTRACT DOCUMENTS

1.2.1 The intent of the Contract Documents is to include all items necessary for the proper execution and completion of the Work by the Contractor. The Contract Documents are complementary, and what is required by one shall be as binding as if required by all; performance by the Contractor shall be required only to the extent consistent with the Contract Documents and reasonably inferable from them as being necessary to produce the indicated results. In case of any conflict in the requirements of the Contract Documents, the Contractor is deemed to have included the better Quality and larger Quantity of the Work.

1.2.2 Organization of the Specifications into divisions, sections and articles, and arrangement of Drawings shall not control the Contractor in dividing the Work among Subcontractors or in establishing the extent of Work to be performed by any trade.

1.2.3 Unless otherwise stated in the Contract Documents, words which have well-known technical or construction industry meanings are used in the Contract Documents in accordance with such recognized meanings.

1.3 CAPITALIZATION

1.3.1 Terms capitalized in these General Conditions include those which are (1) specifically defined, (2) the titles of numbered articles and identified references to Paragraphs, Subparagraphs and Clauses in the document or (3) the titles of other documents.

1.4 INTERPRETATION

1.4.1 In the interest of brevity the Contract Documents frequently omit modifying words such as "all" and "any" and articles such as "the" and "an," but the fact that a modifier or an article is absent from one statement and appears in another is not intended to affect the interpretation of either statement.

1.5 EXECUTION OF CONTRACT DOCUMENTS

1.5.1 The Contract Documents shall be signed by the Owner and Contractor. If either the Owner or Contractor or both do not sign all the Contract Documents, the Consultant shall identify such unsigned Documents upon request.

1.5.2 Execution of the Agreement by the Contractor is a representation that the Contractor has visited the site, become fully familiar with the nature, location and character of the site and surrounding areas, weather conditions, availability of labor, materials, equipment and services, site conditions, surface conditions, subsurface conditions, the Contract Documents, existing local conditions under which the Work is to be performed, the time period for performance and completion of the Work. Contractor represents that it has performed personal observations and correlated the observations with the requirements of the Contract Documents such that the Contractor is not aware of any discrepancies, omissions, ambiguities or conflicts in or among any of the Contract Documents.

1.6 OWNERSHIP AND USE OF DRAWINGS, SPECIFICATIONS AND OTHER INSTRUMENTS OF SERVICE

1.6.1 The Drawings, Specifications and other documents, including any in electronic form, prepared by the Consultant and the Consultant's consultants are documents through which the Work to be executed by the Contractor is described. The Contractor may retain one record set. Neither the Contractor nor any

Subcontractor, including, but not limited to, any Sub-subcontractor or material or equipment supplier shall own or claim any intellectual property rights in the Drawings, Specifications and other documents prepared by the Consultant or the Consultant's consultants. All copies of the documents, except the Contractor's record set, shall be returned or suitably accounted for to the Consultant, on request, upon completion of the Work. The Drawings, Specifications and other documents prepared by the Consultant and the Consultant's consultants, and copies thereof furnished to the Contractor, are for use solely with respect to this Project. They are not to be used by the Contractor or any Subcontractor, including, but not limited to, any Sub-subcontractor or material or equipment supplier on other projects or for additions to this Project outside the scope of the Work without the specific written consent of the Owner, Consultant and the Consultant's consultants. The Contractor, Subcontractors, including, but not limited to, any Sub-subcontractors and material or equipment suppliers are authorized to use and reproduce applicable portions of the Drawings, Specifications and other documents prepared by the Consultant and the Consultant's consultants appropriate to and for use in the execution of their Work under the Contract Documents only. All copies made under this authorization shall bear the statutory copyright notice, if any, shown on the Drawings, Specifications and other documents prepared by the Consultant and the Consultant's consultants. Submittal or distribution to meet official regulatory requirements or for other purposes in connection with this Project is not to be construed as publication in derogation of the any intellectual property right or other reserved rights.

ARTICLE 2 OWNER

2.1 GENERAL

2.1.1 The Owner is the entity identified as such in the Agreement and is referred to throughout the Contract Documents. The Owner may designate in writing a representative who subject to the limitations provided by law, shall have express authority to bind the Owner with respect to all matters requiring the Owner's approval or authorization. Except as otherwise provided in Subparagraph 4.1, the Consultant does not have such authority. The term "Owner" means the Owner or the Owner's Authorized Representative.

2.2 INFORMATION AND SERVICES REQUIRED OF THE OWNER

2.2.1 Except for permits and fees, including those required under Subparagraph 3.7, which are the responsibility of the Contractor under the Contract Documents, the Owner shall secure and pay for necessary approvals, easements, assessments and charges required for construction, use or occupancy of permanent structures or for permanent changes in existing facilities.

2.3 OWNER'S RIGHT TO STOP THE WORK

2.3.1 If the Contractor fails to correct Work which is not in accordance with the requirements of the Contract Documents as required by Paragraph 1.1.3, or persistently fails to carry out Work in accordance with the Contract Documents, the Owner may issue a written order to the Contractor to stop the Work, or any portion thereof, until the cause for such order has been eliminated; however, the right of the Owner to stop the Work shall not give rise to a duty on the part of the Owner to exercise this right for the benefit of the Contractor or any other person or entity, nor give rise to any claim for additions to the Contract Sum or Contract Time.

2.3.2 The Owner shall, in addition to the Right to Stop the Work, have the right to require that the Contractor replace or remove construction personnel assigned to the Work, if, in the Owner’s sole determination, specific construction personnel are impairing or impeding the prosecution of the Work.

2.4 OWNER'S RIGHT TO CARRY OUT THE WORK

2.4.1 If the Contractor defaults or neglects to carry out the Work in accordance with the Contract Documents and fails within a seven-day period after receipt of written notice from the Owner to commence and continue correction of such default or neglect with diligence and promptness, the Owner may, immediately without prejudice to other remedies the Owner may have, correct such deficiencies. In such case an appropriate

Change Order shall be issued deducting from payments then or thereafter due the Contractor the reasonable cost of correcting such deficiencies, including Owner's expenses and compensation for the Consultant's additional services made necessary by such default, neglect or failure. Such change order shall be deemed signed by the Contractor for the purposes of this Agreement even if the Contractor fails to physically sign such Change Order. If payments then or thereafter due the Contractor are not sufficient to cover such amounts, the Contractor shall promptly pay the difference to the Owner. The rights stated herein shall be in addition to and not in lieu of any rights afforded the Owner.

ARTICLE 3 CONTRACTOR

3.1 GENERAL

3.1.1 The Contractor is the person or entity identified as such in the Agreement and is referred to throughout the Contract Documents as if singular in number. The term "Contractor" means the Contractor or the Contractor's Authorized Representative.

3.1.2 The Contractor shall perform and complete the Work in accordance with the Contract Documents for the Contract Sum and within the Contract Time.

3.1.3 The Contractor shall not be relieved of obligations to perform the Work in accordance with the Contract Documents either by activities or duties of the Consultant in the Consultant's administration of the Contract, or in the performance of its obligations or by tests, inspections or approvals required or performed by persons other than the Contractor.

3.2 REVIEW OF CONTRACT DOCUMENTS AND FIELD CONDITIONS BY CONTRACTOR

3.2.1 Since the Contract Documents are complementary, before starting each portion of the Work, the Contractor shall carefully study and compare the various Drawings and other Contract Documents relative to that portion of the Work, as well as the information furnished by the Owner, shall take field measurements of any existing conditions, including all general reference points and interfering site conditions related to that portion of the Work and shall observe any conditions at the site affecting it and shall carefully compare such field measurements and conditions and other information known to the Contractor with the Contract Documents before commencing such activities. These obligations are for the purpose of facilitating construction by the Contractor and are not for the purpose of discovering errors, omissions, or inconsistencies in the Contract Documents; however, any errors, inconsistencies or omissions known, recognized or discovered by the Contractor shall be reported promptly to the Consultant in writing as a request for information in such form as the Consultant may require.

3.2.2 Any design errors or omissions noted by the Contractor during this review shall be reported promptly to the Consultant in writing, but it is recognized that the Contractor's review is made in the Contractor's capacity as a contractor and not as a licensed design professional unless otherwise specifically provided in the Contract Documents. The Contractor is not required to ascertain that the Contract Documents are in accordance with applicable laws, statutes, ordinances, building codes, and rules and regulations, but any nonconformity recognized discovered by or made known to the Contractor shall be reported promptly to the Consultant in writing. The accuracy of grades, elevations, dimensions, locations or otherwise of existing conditions are not warranted to be accurate. The Contractor is solely responsible for verifying the accuracy of grades, elevations, dimensions, locations or otherwise of existing conditions prior to entering in to the Contract.

3.2.3 If the Contractor believes that additional cost or time is involved because of clarifications or instructions issued by the Consultant in response to the Contractor's notices or requests for information pursuant to Subparagraphs 3.2.1 and 3.2.2, the Contractor shall make Claims as provided in Subparagraphs 4.3.6 and 4.3.7. If the Contractor fails to perform the obligations of Subparagraphs 3.2.1 and 3.2.2, the Contractor shall pay such costs and damages to the Owner as would have been avoided if the Contractor had performed such obligations. Except as provided herein, the Contractor shall not be liable to the Owner or Consultant for damages resulting from errors, inconsistencies or omissions in the

Contract Documents or for differences between field measurements or conditions and the Contract Documents unless the Contractor discovered, had knowledge of, recognized or should have recognized such error, inconsistency, omission or difference and failed to report it to the Owner and to the Consultant or accepted the responsibility to verify the same. If the Contractor performs any construction activity it knows or reasonably should have known involves an error, inconsistency or omission in the Contract Documents or reports referenced therein without such notice to the Owner and the Consultant, the Contractor shall assume responsibility for such performance and shall bear the costs attributed to the correction.

3.2.4. In addition to and not in derogation of the Contractor's duties the Contractor shall take all field measurements and verify all field conditions and shall carefully compare such field measurements and conditions with all other information known to the Contractor or included in any of the Contract Documents before commencing any construction activity for the Work. The Owner shall not be liable for any errors, inconsistencies or omissions which should have been reasonably discovered and the Contractor shall report in writing to the Consultant and Owner any errors, inconsistencies or omissions.

3.2.5. Any investigations of subsurface conditions have been made for design purposes only. The results of these investigations may be available for the convenience of the Bidders and the Sub-bidders but are not a part of the Contract Documents. While the Contractor may rely on such investigation results there is no representations or warranties, express or implied that the conditions indicated are representative of those existing at the site or that unforeseen developments may not occur. The Contractor is solely responsible for reasonably interpreting the information and extrapolating beyond the location of each individual boring, test pit, or other testing location.

3.2.6. The Contractor shall do no work without applicable Drawings, Specifications, or written modifications or, where required, Shop Drawings, Product Data, or Samples, unless instructed to do so in writing by the Consultant and Owner.

3.3 SUPERVISION AND CONSTRUCTION PROCEDURES

3.3.1 The Contractor shall supervise and direct the Work, using the Contractor's best skill and attention. The Contractor shall be solely responsible for and have control over construction means, methods, techniques, sequences and procedures and for coordinating all portions of the Work under the Contract. Contractor shall review any specified construction or installation procedure and shall advise the Owner and the Consultant in writing if the specified procedure deviates from acceptable construction practices will impact any warranty or if the Contractor has any objection thereto.

3.3.2 The Contractor shall be responsible to the Owner for acts and omissions of the Contractor's employees, Subcontractors, of any tier, and their agents and employees, and any other persons or entities performing portions of the Work for or on behalf of the Contractor or any Subcontractors of any tier and for any damages, losses, costs and expenses resulting from such acts or omissions.

3.3.3 The Contractor shall be responsible for inspection of portions of Work already performed to determine that such portions are in proper condition to receive subsequent Work.

3.3.4. The Contractor shall inspect, prior to installation, all materials and equipment delivered to, installed at, or fabricated at the site and shall reject that which will not conform to the Contract Documents when fully and properly installed.

3.4 LABOR AND MATERIALS

3.4.1 Unless otherwise provided in the Contract Documents, the Contractor shall provide and pay for labor, materials, equipment, tools, telephone, data transmission, construction equipment and machinery, water, heat, utilities, transportation, and other facilities and services necessary for proper execution and

completion of the Work, whether temporary or permanent and whether or not incorporated or to be incorporated in the Work.

3.4.2 The Contractor may make substitutions only with the written consent of the Owner, after evaluation by the Consultant and in accordance with a Change Order.

3.4.3 The Contractor shall enforce strict discipline and good order among the Contractor's employees and other persons carrying out the Contract. The Contractor shall not permit employment of unfit persons or persons not skilled in tasks assigned to them.

3.5 WARRANTY

3.5.1 The Contractor warrants to the Owner and Consultant that the Work, including, but not limited to, any and all materials and equipment furnished under the Contract will be of good quality and new unless otherwise required or permitted by the Contract Documents, that the Work will be free from defects not inherent in the quality required or permitted, and that the Work will conform to the requirements of the Contract Documents. Work not conforming to these requirements, including substitutions not properly approved and authorized, may be considered defective. The Contractor's warranty excludes remedy for damage or defect caused by abuse, modifications not executed by the Contractor, improper or insufficient maintenance, improper operation, or normal wear and tear and normal usage. If required by the Consultant, the Contractor shall furnish satisfactory evidence as to the kind and quality of materials and equipment. In addition, the Contractor assigns to the Owner any and all warranties. The Contractor further warrants that all construction activity of the Work shall be performed on the Work so as to preserve all such warranties. To the extent that any warranty is non-assignable, Contractor warrants that it will pursue such warranty claim for the use and benefit of the Owner without cost or expense to the owner. The Contractor shall require this provision to be included in all subcontracts of any tier.

3.6 TAXES

3.6.1 The Contractor shall pay as and when due_sales, consumer, property, occupational, Social Security benefits, unemployment compensation, use and similar taxes, excises, duties and assessments for the Work provided by the Contractor.

3.7 PERMITS, FEES AND NOTICES

3.7.1 Unless otherwise provided in the Contract Documents, the Contractor shall secure and pay for the building permit and other permits and governmental fees, licenses and inspections necessary for proper execution and completion of the Work which are customarily secured after execution of the Contract and which are legally required when bids are received, negotiations concluded or the Contract is executed. To the extent that there is any difference in these requirements the most stringent requirements on the Contractor shall apply.

3.7.2 The Contractor shall comply with and give notices required by laws, ordinances, rules, regulations and lawful orders of public authorities applicable to performance of the Work. If the Contractor fails to comply or give such notices it will be liable for and shall to the fullest extent permitted by law defend indemnify and hold the Owner and Consultant and their respective employees, officers and agents harmless from any costs, loss, penalty or damage.

3.7.3 Except as otherwise provided herein, it is not the Contractor's responsibility to ascertain that the Contract Documents are in accordance with applicable laws, statutes, ordinances, building codes, and rules and regulations. However, if the Contractor becomes aware, gains knowledge, recognizes or observes that portions of the Contract Documents are at variance therewith, the Contractor shall promptly notify the Consultant and Owner in writing, and necessary changes shall be accomplished by appropriate Modification.

3.7.4 If the Contractor performs Work knowing the construction activity to be contrary to laws, statutes, ordinances, building codes, and rules and regulations without such notice to the Consultant and Owner, the Contractor shall assume appropriate responsibility for such Work and shall bear the costs, loss, damages and penalties attributable to correction.

3.8 ALLOWANCES

3.8.1 The Contractor shall include in the Contract Sum any and all allowances stated in the Contract Documents. Items covered by allowances shall be supplied for such amounts and by such persons or entities as the Owner may direct, but the Contractor shall not be required to employ persons or entities to whom the Contractor has reasonable objection.

3.8.2 Unless otherwise provided in the Contract Documents:

.1 allowances shall cover the cost to the Contractor of materials and equipment delivered at-the site and all required taxes, less applicable trade discounts;

.2 Contractor's costs for unloading and handling at the site, labor, installation costs, overhead, profit and other expenses contemplated for stated allowance amounts shall be included in the Contract Sum but not in the allowances;

.3 whenever costs are more than or less than allowances, the Contract Sum shall be adjusted accordingly by Change Order. The amount of the Change Order shall reflect (I) the difference between actual costs and the allowances under Clause 3.8.2.1 and (2) changes in Contractor's costs under Clause 3.8.2.2.

3.8.3 Materials and equipment under an allowance shall be selected by the Owner in sufficient time to avoid delay in the Work.

3.9 SUPERINTENDENT

3.9.1 The Contractor shall employ an experienced and competent superintendent and necessary assistants who shall be in attendance at the Project site at all times during performance of the Work including completion of the punch list. The Contractor shall notify the Consultant and the Owners Representative as to the identity of the superintendent who shall not be changed during the course of the Work without prior written notification to the Consultant and Owner Representative. The superintendent shall represent the Contractor, and communications given to the superintendent shall be as binding as if given to the Contractor. Important communications shall be confirmed in writing. Other communications shall be similarly confirmed on written request in each case.

3.10 CONTRACTOR'S CONSTRUCTION SCHEDULES

3.10.1 The Contractor, promptly and within ten (10) days after being awarded the Contract, shall prepare and submit for the Owner's and Consultant's information a preliminary Contractor's construction schedule for the Work consistent with the with the requirements of the Contract Documents. Prior to submitting its first Application for Payment, the Contractor, after consultation with its subcontractors, shall submit six (6) hard copies and one electronic copy of the Contractor’s construction schedule consistent with the requirements of the Contract Documents. The schedule shall not exceed time limits current under the Contract Documents, shall be revised at appropriate intervals as required by the conditions of the Work and Project, shall be related to the entire Project to the extent required by the Contract Documents, and shall provide for expeditious and practicable execution of the Work. The construction schedule shall not be changed without the prior written consent of the Owners Representative.

3.10.2 The Contractor shall prepare and keep current, for the Consultant's review, a schedule of submittals which is coordinated with the Contractor's construction schedule and allows the Owner and the Consultant reasonable time to review in accordance with the Specifications and submittal procedures. The Contractor

should expect a response time of approximately 21 days from the Consultant and Consultant's consultants. Neither the Consultant nor Owner can represent or guarantee response times from governmental authorities, such as permitting agencies. Neither the Contractor's preparation, nor the Consultant's receipt or review shall modify the Contractor's responsibility to make required submittals or to do so in a timely manner.

3.10.3 The Contractor shall perform the Work in accordance with the most recent schedules submitted to the Owner and accepted by the Owner and shall promptly notify the Owner of any deviations from the schedule. Should the Contractor fail to comply with the schedule, or in the Owner's opinion fail, refuse, or neglect to supply a sufficient amount of labor, materials, equipment or services in the prosecution of the Work, the Owner shall have the right to direct the Contractor to furnish such additional labor, materials, equipment or services to comply with the schedule and all costs thereof shall be borne by the Contractor and shall not increase the Contract Sum. All schedules submitted shall be in the form acceptable to the Owner using critical path methodology (CPM) clearly showing overall Project and specific items and tasks of construction activities, dependencies and durations as well as overall and specific commencement and completions dates. The critical path activities shall be highlighted, float and non-critical activities shall be shown and the start and stop times for each activity shall be listed. Float belongs to the benefit of the Project for the Owner's use and no float shall be used without the Owner's written approval. The Contractor shall at all times monitor the progress of the Work for conformance with the CPM schedule accepted by the Owner and shall promptly advise the Owner and Consultant of any impacts or delays or potential impacts or delays. The Contractor shall also update the construction schedule to reflect actual conditions and shall propose plans in order to avoid or correct any impact or delays.

3.11 DOCUMENTS AND SAMPLES AT THE SITE

3.11.1 The Contractor shall maintain at the site for the Owner one (1) record copy of the Drawings, Specifications, Addenda, Change Orders and other Modifications, in good order and marked currently to record field changes and selections made during construction, and one (1) record copy of approved Shop Drawings, Product Data, Samples and similar required submittals. These shall be accessible to inspectors and available to the Consultant and Owner and shall be delivered to the Consultant for submittal to the Owner upon completion of the Work and before Contractor's request for final payment.

3.12 SHOP DRAWINGS, PRODUCT DATA AND SAMPLES

3.12.1 Shop Drawings are drawings, diagrams, schedules and other data specially prepared for the Work by the Contractor or a Subcontractor, Sub-subcontractor, manufacturer, supplier or distributor to illustrate some portion of the Work.

3.12.2 Product Data are illustrations, standard schedules, performance charts, instructions, brochures, diagrams and other information furnished by the Contractor to illustrate materials or equipment for some portion of the Work.

3.12.3 Samples are physical examples which illustrate materials, equipment or workmanship and establish standards by which the Work will be judged.

3.12.4 Shop Drawings, Product Data, Samples and similar submittals are not Contract Documents. The purpose of their submittal is to demonstrate for those portions of the Work for which submittals are required by the Contract Documents the way by which the Contractor proposes to conform to the information given and the design concept expressed in the Contract Documents. Review by the Consultant or any other person is subject to the limitations of Subparagraph 4.2. 7. Information submittals upon which the Consultant is not expected to take responsive action may be so identified in the Contract Documents. Submittals which are not required by the Contract Documents may be returned by the Consultant without action.

3.12.5 The Contractor shall review for compliance with the Contract Documents, approve and submit to the Consultant, Shop Drawings, Product Data, Samples and similar submittals required by the Contract

Documents with reasonable promptness and in such sequence as to cause no delay in the Work or in the activities of the Owner or of separate contractors. Submittals which are not marked as reviewed for compliance with the Contract Documents and approved by the Contractor may be returned by the Consultant without action.

3.12.6 By approving and submitting Shop Drawings, Product Data, Samples and similar submittals, the Contractor represents that the Contractor has determined and verified materials, field measurements and field construction criteria related thereto, or will do so, and has checked and coordinated the information contained within such submittals with the requirements of the Work and of the Contract Documents.

3.12.7 The Contractor shall perform no portion of the Work for which the Contract Documents require submittal and review of Shop Drawings, Product Data, Samples or similar submittals until the respective submittal has been approved by the Consultant.

3.12.8 The Work shall be in accordance with approved submittals except that the Contractor shall not be relieved of responsibility for deviations from requirements of the Contract Documents by any approval of Shop Drawings, Product Data, Samples or similar submittals unless the Contractor has specifically informed the Consultant and Owner in writing of such deviation at the time of submittal and (1) the Consultant has given specific written approval to the specific deviation as a minor change in the Work, or (2) a Change Order or Construction Change Directive has been issued authorizing the deviation. The Contractor shall not be relieved of responsibility for errors or omissions in Shop Drawings, Product Data, Samples or similar submittals by the, any person's approval thereof.

3.12.9 The Contractor shall direct specific attention, in writing or on resubmitted Shop Drawings, Product Data, Samples or similar submittals, to revisions other than those requested by the Consultant on previous submittals. In the absence of such written notice, any person's approval of a resubmission shall not apply to such revisions. Contractor shall submit Shop Drawings, Product Data, Samples and similar submittals in forms and in a manner reasonably acceptable to the Consultant. Contractor shall submit no less than two (2) copies or examples for review of any Shop Drawings, Product Data, Samples or similar submittals at Contractor’s sole cost and expense.

3.12.10 The Contractor shall not be required to provide professional services which constitute the practice of Architecture or engineering unless such services are specifically required by the Contract Documents for a portion of the Work or unless the Contractor needs to provide such services in order to carry out the Contractor's responsibilities for construction means, methods, techniques, sequences and procedures. The Contractor shall not be required to provide professional services in violation of applicable law. If professional design services or certifications by a design professional related to systems, materials or equipment are specifically required of the Contractor by the Contract Documents, the Owner and the Consultant will specify all performance and design criteria that such services must satisfy. The Contractor shall cause such services or certifications to be provided by a properly licensed design professional, whose signature and seal shall appear on all drawings, calculations, specifications, certifications, Shop Drawings and other submittals prepared by such professional. Shop Drawings and other submittals related to the Work designed or certified by such professional, if prepared by others, shall bear such professional's written approval when submitted to the Consultant. The Owner and the Consultant shall be entitled to rely upon the adequacy, accuracy and completeness of the services, certifications or approvals performed by such design professionals, provided the Owner and Consultant have specified to the Contractor all performance and design criteria that such services must satisfy. Pursuant to this Subparagraph 3.12.10, the Consultant will review, approve or take other appropriate action on submittals only for the limited purpose of checking for conformance with information given and the design concept expressed in the Contract Documents. The Contractor shall not be responsible for the adequacy of the performance or design criteria required by the Contract Documents.

3.13 USE OF SITE

3.13.1 The Contractor shall confine operations at the site to areas permitted by law, ordinances, permits and the Contract Documents and shall not unreasonably encumber the site with materials or equipment.

Notwithstanding anything contained in the Contract Documents to the contrary, the Contractor shall, as part of the Work, not disrupt or interfere in any manner with any of the Owner's or Owner's authorized provider's operations at the Project site or any other locations, including, without limitation any and all educational, social, athletic or recreational programs, activities, classes or events. Contractor shall not park or otherwise utilize any other area designated by the Owner or typically used by Owner's employees, staff, students, parents or visitors or local residents or businesses.

3.14 CUTTING AND PATCHING

3.14.1 The Contractor shall be responsible for cutting, fitting or patching required to complete the Work or to make its parts fit together properly.

3.14.2 The Contractor shall not damage or endanger a portion of the Work or fully or partially completed construction of the Owner or separate contractors by cutting, patching or otherwise altering such construction, or by excavation. The Contractor shall not cut or otherwise alter such construction by the Owner or a separate contractor except with written consent of the Owner and of such separate contractor; such consent shall not be unreasonably withheld. The Contractor shall not unreasonably withhold from the Owner or a separate contractor the Contractor's consent to cutting or otherwise altering the Work. To the extent that the Work involves renovation, alteration or repair of existing improvements, cutting and patching essential for the Project shall be successfully completed and Contractor shall perform the Work so that it is fully integrated into the existing improvements operationally and aesthetically.

3.15 CLEANING UP

3.15.1 The Contractor shall at all times keep the premises and surrounding area free from accumulation of waste materials or rubbish caused by operations under the Contract. At completion of the Work, the Contractor shall remove from and about the Project waste materials, rubbish, the Contractor's tools, construction equipment, machinery and surplus materials.

3.15.2 If the Contractor fails to clean up as provided in the Contract Documents, the Owner may do so and the cost thereof shall be charged to the Contractor.

3.16 ACCESS TO WORK

3.16.1 The Contractor shall provide the Owner and Consultant and their employees. agents and officers access to the Work in preparation and progress wherever located.

3.17 ROYALTIES, PATENTS AND COPYRIGHTS

3.17.1 The Contractor shall pay all royalties and license fees. The Contractor shall defend suits or claims for infringement of copyrights and patent rights and shall hold the Owner and Consultant harmless from loss on account thereof, but shall not be responsible for such defense or loss when a particular design, process or product of a particular manufacturer or manufacturers is required by the Contract Documents or where the copyright violations are contained in Drawings, Specifications or other documents prepared by the Owner or Consultant. However, if the Contractor has reason to believe that the required design, process or product is an infringement of a copyright or a patent, the Contractor shall be responsible for such loss unless such information is promptly furnished to the Consultant in writing.

3.18 INDEMNIFICATION

3.18.1 To the fullest extent permitted by law and to the extent claims, damages, losses or expenses are not covered by Project Management Protective Liability insurance purchased by the Contractor in accordance with Paragraph 11.2, the Contractor shall indemnify and hold harmless the Owner, Consultant, Consultant's consultants, and agents and employees of any of them from and against claims, damages, losses and expenses, including, but not limited to, attorneys' fees, arising out of or resulting from performance of the

Work, provided that such claim, damage, loss or expense is attributable to bodily injury, sickness, disease or death, or to injury to or destruction of tangible property (other than the Work itself), but only to the extent caused by the negligent acts or omissions of the Contractor, any Subcontractor, anyone directly or indirectly employed by them or anyone for whose acts they may be liable, regardless of whether or not such claim, damage, loss or expense is caused in part by a party indemnified hereunder. Such obligation shall not be construed to negate, abridge, or reduce other rights or obligations of indemnity which would otherwise exist as to a party or person described in this Paragraph 3.18.

3.18.2 In claims against any person or entity indemnified under this Paragraph 3.18 by an employee of the Contractor, Subcontractor, anyone directly or indirectly employed by them or anyone for whose acts they may be liable, the indemnification obligation under Subparagraph 3.18.1 shall not be limited by a limitation on amount or type of damages, compensation or benefits payable by or for the Contractor or a Subcontractor under workers' compensation acts, disability benefit acts or other employee benefit acts.

ARTICLE 4 ADMINISTRATION OF THE CONTRACT

4.1 CONSULTANT OR OWNER'S REPRESENTATIVE

4.1.1 The term "Consultant" as used in the Contract Documents, shall mean arkitek:design&architecture, llc., or "Owner's Representative", as used in the Contract Documents, shall mean HMK Company (HMKCO), and its respective personnel.

4.1.2.1 If a licensed Consultant is engaged by Owner who is not designated as the "Owner's Representative", the Owner shall make written directive and notification to Contractor, which shall perform any Contract Administration duties. For ease of reference and consistency, the term "Consultant" shall be used in the Contract Documents to refer to the contract administrator.

4.1.2 Duties, responsibilities and limitations of authority of the Consultant as set forth in the Contract Documents shall not be restricted, modified or extended without written consent of the Owner, and Consultant.

4.1.3 If the employment of the Consultant is terminated, the Owner shall employ a new Consultant under such terms and conditions as are agreeable between the Owner and the new Consultant.

4.2 CONSULTANT'S ADMINISTRATION OF THE CONTRACT

4.2.1 The Consultant may provide administration of the Contract as described in the Contract Documents, and may be an Owner's representative (1) during construction, (2) until final payment is due and (3) with the Owner's concurrence, from time to time during the one-year period for correction of Work described in Paragraph 12.2. The Consultant will have authority to act on behalf of the Owner only to the extent provided in the Contract Documents, unless otherwise modified in writing in accordance with other provisions of the Contract.

4.2.2 The Consultant, as a representative of the Owner, will visit the site at intervals appropriate to the stage of the Contractor's operations (1) to become generally familiar with and to keep the Owner informed about the progress and quality of the portion of the Work completed, (2) to endeavor to guard the Owner against defects and deficiencies in the Work, and (3) to determine in general if the Work is being performed in a manner indicating that the Work, when fully completed, will be in accordance with the Contract Documents. However, the Consultant will not be required to make exhaustive or continuous on-site inspections to check the quality or quantity of the Work. The Consultant will neither have control over or charge of, nor be responsible for the construction means, methods, techniques, sequences or procedures, or for the safety precautions and programs in connection with the Work, since these are solely the Contractor's rights and responsibilities under the Contract Documents, except as provided in Subparagraph 3.3.1.

4.2.3 The Consultant will not be responsible for the Contractor's failure to perform the Work in accordance with the requirements of the Contract Documents. The Consultant will not have control over or charge of

and will not be responsible for acts or omissions of the Contractor, any Subcontractors, or their agents or employees, or any other persons or entities performing portions of the Work.

4.2.4 Communications Facilitating Contract Administration. The Owner, Owners Representative and Contractor may communicate with each other through the Consultant about matters arising out of or relating to the Contract. The Contractor shall also PROVIDE THE OWNER AND OWNERS REPRESENTATIVE WITH A DIRECT COPY OF ALL WRITTEN COMMUNICATIONS TO THE CONSULTANT, including all notices, requests, Claims and potential changes in the Contract Sum or Time, but not including Shop Drawings, Product Data or Samples. Communications by and with the Consultant's consultants shall be through the Consultant. Communications by and with Subcontractors and material suppliers shall be through the Contractor. Communications by and with separate contractors shall be through the Owner.

4.2.5 Based on the Consultant's evaluations of the Contractor's Applications for Payment, the Consultant may review and certify the amounts due the Contractor and will issue Certificates for Payment in such amounts.

4.2.6 The Consultant may have authority to reject Work that does not conform to the Contract Documents. Whenever the Consultant considers it necessary or advisable, the Consultant may have authority to require inspection or testing of the Work in accordance with Subparagraphs 13.5.2 and 13.5.3, whether or not such Work is fabricated, installed or completed. However, neither this authority of the Consultant nor a decision made in good faith either to exercise or not to exercise such authority shall give rise to a duty or responsibility of the Consultant to the Contractor, Subcontractors, material and equipment suppliers, their agents or employees, or other persons or entities performing portions of the Work.

4.2.7 The Consultant will review and approve or take other appropriate action upon the Contractor's submittals such as Shop Drawings, Product Data and Samples, but only for the limited purpose of checking for conformance with information given and the design concept expressed in the Contract Documents. The Consultant's action will be taken with such reasonable promptness as to cause no delay in the Work or in the activities of the Owner, Contractor or separate contractors, while allowing sufficient time in the Consultant's professional judgment to permit adequate review. Review of such submittals is not conducted for the purpose of determining the accuracy and completeness of other details such as dimensions and quantities, or for substantiating instructions for installation or performance of equipment or systems, all of which remain the responsibility of the Contractor as required by the Contract Documents. The Consultant's review of the Contractor's submittals shall not relieve the Contractor of the obligations under Paragraphs 3.3, 3.5 and 3.12. The Consultant's review shall not constitute approval of safety precautions or, unless otherwise specifically stated by the Consultant, of any construction means, methods, techniques, sequences or procedures. The Consultant's approval of a specific item shall not indicate approval of an assembly of which the item is a component.

4.2.8 The Consultant may prepare Change Orders and Construction Change Directives, and may authorize minor changes in the Work as provided in Paragraph 7.4.

4.2.9 The Consultant may conduct inspections to determine the date or dates of Substantial Completion and the date of final completion, may receive and forward to the Owner, for the Owner's review and records, written warranties and related documents required by the Contract and assembled by the Contractor, and may issue a final Certificate for Payment upon compliance with the requirements of the Contract Documents.

4.2.10 If the Owner and Consultant designate, the Consultant will provide one or more project representatives to assist in carrying out the Consultant's responsibilities at the site.

4.2.11 The Consultant may interpret and decide matters concerning performance under and requirements of, the Contract Documents on written request of either the Owner or Contractor. The Consultant's response to such requests will be made in writing within any time limits agreed upon or otherwise with reasonable promptness. If no agreement is made concerning the time within which interpretations required of the Consultant shall be furnished in compliance with this Paragraph 4.2, then delay shall not be recognized on

account of failure by the Consultant to furnish such interpretations until 5 days after written request is made for them.

4.2.12 Interpretations and decisions of the Consultant, if any, will be consistent with the intent of and reasonably inferable from the Contract Documents and will be in writing or in the form of drawings. When making such interpretations and initial decisions, the Consultant will endeavor to secure faithful performance by both Owner and Contractor, will not show partiality to either and will not be liable for results of interpretations or decisions so rendered in good faith.

4.2.13 The Consultant's decisions on matters relating to aesthetic effect may be final if consistent with the intent expressed in the Contract Documents. The terms and conditions of the Owner's agreement with the Consultant shall govern the Consultant's responsibilities.

4.3 CLAIMS AND DISPUTES

4.3.1 Definition. A Claim is a demand or assertion by one of the parties seeking, as a matter of right, adjustment or interpretation of Contract terms, payment of money, and extension of time or other relief with respect to the terms of the Contract. The term "Claim" also includes other disputes and matters in question between the Owner and Contractor arising out of or relating to the Contract. Claims must be initiated by written notice. The responsibility to substantiate Claims shall rest with the party making the Claim.

4.3.2 Time Limits on Claims. Claims by either party must be initiated within 21 days after occurrence of the event giving rise to such Claim or within 21 days after the claimant first recognizes the condition giving rise to the Claim, whichever is later. Claims must be initiated by written notice to the Consultant and the other party.

4.3.3 Continuing Contract Performance. Pending final resolution of a Claim except as otherwise agreed in writing or as provided in Subparagraph 9.7.1 and Article 14, the Contractor shall proceed diligently with performance of the Contract and the Owner shall continue to make payments in accordance with the Contract Documents.

4.3.4 Claims for Concealed or Unknown Conditions. Except as otherwise provided herein, if conditions are encountered at the site which are (1) subsurface or otherwise concealed physical conditions which differ materially from those indicated in the Contract Documents or (2) unknown physical conditions of an unusual nature, which differ materially from those ordinarily found to exist and generally recognized as inherent in construction activities of the character provided for in the Contract Documents, the Contractor shall give written notice to the Owner and the Consultant promptly before conditions are disturbed and in no event later than seven (7) days after first observance of the conditions. The Consultant may promptly investigate such conditions and, if they differ materially and cause an increase or decrease in the Contractor's cost of, or time required for, performance of any part of the Work, will recommend an equitable adjustment in the Contract Sum or Contract Time, or both, consistent with the requirements of the Contract Documents. If the Consultant determines that the conditions at the site are not materially different from those indicated in the Contract Documents and that no change in the terms of the Contract is justified, the Consultant may so notify the Owner and Contractor in writing, stating the reasons. Any claim of the Contractor arising from the Consultant’s determination shall be made in accordance with the dispute resolution procedures set forth in Paragraphs 4.4 through 4.6. No adjustment in the Contract Time or Sum shall be permitted, however, if connection with any concealed or unknown condition which does not materially differ from those disclosed or which should have reasonably been discovered by the Contractor’s prior visits, observations, tests or for which the Contractor assumed any responsibility to verify.

4.3.5 Claims for Additional Cost. If the Contractor wishes to make Claim for an increase in the Contract Sum, written notice as provided herein shall be given before proceeding to execute the Work, and a Claim must be made in accordance with Paragraphs 4.4 through 4.6 or it will be deemed waived. Prior notice is not required for Clams relating to an emergency endangering life or property arising under Paragraph 10.6.

4.3.6 If the Contractor believes additional cost is involved for reasons, including, but not limited to:

.1 a written interpretation from the Consultant

.2 an order by the Owner to stop the Work where the Contractor was not at fault

.3 a written order for a minor change in the Work issued by the Consultant

.4 failure of payment by the Owner

.5 termination of the Contract by the Owner

.6 Owner's suspension or

.7 other reasonable grounds, Claim shall be filed in accordance with this Paragraph 4.3.

All Claims for additional costs shall include any and all costs, including, but not limited to, any and all direct and indirect costs thereof.

4.3.7 Claims for Additional Time

4.3.7.1 If the Contractor wishes to make Claim for an increase in the Contract Time, written notice as provided herein shall be given and a Claim shall be made as provided herein. The Contractor's Claim shall include an estimate of any cost and of probable effect of delay on progress of the Work. In the case of a continuing delay, only one Claim is necessary. If the delay was not caused by the Owner, the Contractor, a Subcontractor of any tier, or the Consultant, or anyone acting on behalf of any of them, the Contractor shall be entitled only to an increase in the Contract Time, in accordance with the Contract documents, but not a change in the Contract Sum. If the delay was caused by the Contractor, a Subcontractor of any tier, or anyone acting on behalf of any of them, the Contractor is not entitled to an increase in the Contract Time or in the Contract Sum.

4.3.7.2 If adverse weather conditions are the basis for a Claim for additional time, such Claim shall be documented by data substantiating that weather conditions were abnormal for the period of time, could not have been reasonably anticipated and had an adverse effect on the scheduled construction, and that the Work was on schedule (or was not behind schedule through the fault of the Contractor) at the time the adverse weather conditions occurred. Neither the Contract Time nor the Contract Sum will be adjusted for normal inclement weather. The Contractor shall be entitled to a change in the Contract Time only if the Contractor can substantiate to the reasonable satisfaction of the Owner and Consultant that there was materially greater than normal inclement weather considering the full term of the Contract Time and using a ten-year average of accumulated record mean values from climatological data compiled by the U.S. Department of Commerce National Oceanic and Atmospheric Administration for the locale of the Project, and that the alleged abnormal inclement weather actually extended the critical path of the Work. IF the total net accumulated number of calendar days lost due to inclement weather from commencement of the Work until Final Completion exceeds the total net accumulated to be expected for the same period from the aforesaid data, and the Owner grants the critical path.

4.3.8 Injury or Damage to Person or Property. If either party to the Contract suffers injury or damage to person or property because of an act or omission of the other party, or of others for whose acts such party is legally responsible, written notice of such injury or damage, whether or not insured, shall be given to the other party within a reasonable time not exceeding 21 days after discovery. The notice shall provide sufficient detail to enable the other party to investigate the matter.

4.3.9 If unit prices are stated in the Contract Documents or subsequently agreed upon, and if quantities originally contemplated are materially changed in a proposed Change Order or Construction Change Directive so that application of such unit prices to quantities of Work proposed will cause substantial inequity to the Owner or Contractor, the applicable unit prices shall be equitably adjusted.

4.3.10 Time is of the Essence. The parties agree that the Owner shall be entitled to recover liquidated damages at the rate stated in the Agreement, which shall commence on the first day following the expiration of the Contract Time and continuing until the date of Substantial completion.

4.4 RESOLUTION OF CLAIMS AND DISPUTES

4.4.1 In an effort to reduce the incidence and costs to all parties of extended disputes, all Claims, direct or indirect, arising out of, or relating to, the Contract Documents or the breach thereof, except claims which have been waived under the terms of the Contract Documents, shall be decided exclusively by the following alternative dispute resolution procedure unless the parties mutually agree in writing otherwise.

4.4.2 The Contractor shall submit a written notice of any Claim to the Owner and the Consultant within 14 days of the occurrence of the event giving rise to such Claim and shall include a clear description of the event leading to or causing the Claim. The Contract shall submit a written Claim as providing herein within 30 days of the notice. Claims shall include a clear description of the Claim and any proposed change in the Contract Sum (showing all components and calculations) and/or Contract Time (showing cause of and analysis of the resultant delay in the critical path) of the Claim and shall provide data fully supporting the Claim. Failure to properly submit the notice of Claim shall constitute waiver of the Claim. The Claim shall be deemed to include all changes, direct and indirect, in cost and in time to which the Contractor (and Subcontractors of any tier) is entitled. Any claim of a Subcontractor of any tier may be brought only through, and after review by, the Contractor.

4.4.3 Upon receipt of a Claim against the Contractor or at any time thereafter, the Consultant or the Owner may, but is not obligated to, notify the surety, if any, of the nature and amount of the Claim. If the Claim relates to a possibility of a Contractor's default, the Consultant or the Owner may, but is not obligated to, notify the surety and request the surety's assistance in resolving the controversy.

4.4.4 If a claim relates to or is the subject of a mechanic’s lien or construction lien, the party asserting such Claim may proceed in accordance with applicable law to comply with the lien notice or filing deadlines prior to resolution of the Claim by the Consultant, by mediation or by litigation.

4.4.5 Within 30 days of the Owner’s receipt of the written Claim, the Contactor may require that an officer of the Contractor, a principal of the Consultant, and the Owner’s Superintendent or designee (all with authority to settle) meet, confer, and attempt to resolve the Claim during the following 21 days. The Owner may continue the meeting to a time after it has assembled and reviewed data. If the Claim is not resolved, the Contractor may bring no claim against the Owner unless the Claim is first subject to nonbinding mediation as described in Paragraph 4.5. This requirement cannot be waived except by an explicit written waiver.

4.4.6 The Contractor agrees that the Owner may join the Contractor as a party to any litigation/arbitration involving the alleged fault of the Contractor or Subcontractor of any tier.

4.5 MEDIATION

4.5.1 Any Claim arising out of or relating to the Contract, except Claims relating to aesthetic effect and except those waived shall be subject to mediation as a condition precedent to the institution of legal or equitable proceedings by either party. This requirement cannot be waived except by an express written waiver.

4.5.2 The parties shall endeavor to resolve their claims by mediation, which unless the parties mutually agree otherwise, shall be in accordance with the Construction Industry Mediation Rule of the American Arbitration Association currently in effect. Request for mediation shall be filed in writing with the other party to the Contract and with the American Arbitration Association. Mediation shall proceed in advance of legal or equitable proceedings, which shall be stayed pending mediation unless stayed for a longer period by agreement of the parties or court order.

4.5.3 The parties to the mediation shall share the mediator's fee and any filing fees equally. The medication shall be held in the place where the Project is located, unless another location is mutually agreed upon. Agreements reached in mediation shall be enforceable as settlement agreements in any court having jurisdiction thereof.

4.5.4 An officer of the Contract and the Owner's Superintendent or designee must attend the mediation session with authority to settle the Claim. To the extent there are other parties in interest, such as the Consultant or Subcontractors, their representatives, also with the authority to settle the Claim, shall also attend the mediation session. Unless the Owner and the Contractor mutually agree in writing otherwise, all unresolved Claims shall be considered at a single mediation session which shall occur prior to Final Acceptance by the Owner.

4.6 LITIGATION

4.6.1 The Contractor may bring no litigation on Claims unless such Claims have been properly raised and considered in the procedures of Subparagraphs 4.4.1 through 4.4.3 above. All unresolved Claims of the Contractor shall be waived and released unless the Contractor has complied with the time limits of the Contract Documents, and litigation is served and filed within the earlier of (a) 120 days after the Date of Substantial Completion approved in writing by the Owner or (b) 60 days after Final Acceptance. This requirement cannot be waived except by an explicit written waiver signed by the Owner and the Contractor. The pendency of mediation shall toll these deadlines until the later of the mediator providing written notice to the parties of impasse or 30 days after the date of the last mediation session. Neither the Contractor nor a Subcontractor of any tier, whether claiming under a lien statute or otherwise, shall be entitled to attorneys' fees directly or indirectly from the Owner (but may recover attorneys' fees from the statutory Retainage fund itself to the extent allowable under law).

4.6.2 Judgment on Final Award. The award rendered by the arbitrator or arbitrators shall be final, and judgment may be entered upon it in accordance with applicable law in any court having jurisdiction thereof.

ARTICLE 5 SUBCONTRACTORS

5.1 DEFINITIONS

5.1.1 The term "Subcontractor" is referred to throughout the Contract Documents as if singular in number and means a Subcontractor or an authorized representative of the Subcontractor. The term "Subcontractor" does not include a separate contractor or subcontractors of a separate contractor.

5.2 AWARD OF SUBCONTRACTS AND OTHER CONTRACTS FOR PORTIONS OF THE WORK

5.2.1 The Contractor shall not change a Subcontractor, person or entity previously selected if the Owner or Consultant makes reasonable objection to such substitute. The Contractor shall require bids and contracts from Subcontractors to be submitted in a format which specifically sets for the amount of any credit that the Owner will ultimately be the benefit of, if all or any portion of any Subcontractor's Work is deleted. In no instance shall the Owner be obligated to pay any fee, profit or overheard for Work which is deleted from any Subcontractor's scope or from that of the Contractor.

5.3 SUBCONTRACTUAL RELATIONS

5.3.1 By appropriate agreement, written where legally required for validity, the Contractor shall require each Subcontractor, to the extent of the Work to be performed by the Subcontractor, to be bound to the Contractor by terms of the Contract Documents, and to assume toward the Contractor all the obligations and responsibilities, including the responsibility for safety of the Subcontractor's Work, which the Contractor, by these Documents, assumes toward the Owner or Consultant. Each subcontract agreement shall preserve and protect the rights of the Owner and Consultant under the Contract Documents with respect to the Work to be performed by the Subcontractor so that subcontracting thereof will not prejudice such rights. Where appropriate, the Contractor shall require each Subcontractor to enter into similar agreements with

other Subcontractors. The Contractor shall make available to each proposed Subcontractor, prior to the execution of the subcontract agreement, copies of the Contract Documents to which the Subcontractor will be bound, and, upon written request of the Subcontractor, identify to the Subcontractor terms and conditions of the proposed subcontract agreement which may be at variance with the Contract Documents. Subcontractors will similarly make copies of applicable portions of such documents available to their respective proposed Sub-subcontractors.

5.4 CONTINGENT ASSIGNMENT OF SUBCONTRACTS

5.4.1 Each subcontract agreement for a portion of the Work is assigned by the Contractor to the Owner or to another contractor should Owner so elect and consent, provided that:

.1 assignment is effective only after termination of the Contract by the Owner and only for those subcontract agreements which the Owner accepts by notifying the Subcontractor and Contractor in writing; and

.2 assignment is subject to the prior rights of the surety, if any, obligated under bond relating to the Contract.

5.4.2 Each subcontract shall specifically provide that the Owner (or other contractor) shall only be responsible to the subcontractor for those obligations that accrue after the Owner’s or other contractor’s exercise of rights under the conditional assignment required hereby.

ARTICLE 6 CONSTRUCTION BY OWNER OR BY SEPARATE CONTRACTORS

6.1 OWNER'S RIGHT TO PERFORM CONSTRUCTION AND TO AWARD SEPARATE CONTRACTS

6.1.1 The Owner reserves the right to perform construction or operations related to the Project with the Owner's own forces, and to award separate contracts in connection with other portions of the Project or other construction or operations on the site under Conditions of the Contract identical or substantially similar to these including those portions related to insurance and waiver of subrogation. If the Contractor claims that delay or additional cost is involved because of such action by the Owner, the Contractor shall make such Claim as provided in Paragraph 4.3.

6.1.2 When separate contracts are awarded for different portions of the Project or other construction or operations on the site, the term "Contractor" in the Contract Documents in each case shall mean the Contractor who executes each separate Owner-Contractor Agreement.

6.1.3 The Owner shall provide for coordination of the activities of the Owner's own forces and of each separate contractor with the Work of the Contractor, who shall cooperate with them. The Contractor shall participate with other separate contractors and the Owner in reviewing their construction schedules when directed to do so. The Contractor shall make without an increase in the Contract Time or Sum any revisions to the construction schedule deemed necessary after a joint review and mutual agreement. The construction schedules shall then constitute the schedules to be used by the Contractor, separate contractors and the Owner until subsequently revised.

6.1.4 Unless otherwise provided in the Contract Documents, when the Owner performs construction or operations related to the Project with the Owner's own forces, the Owner shall be deemed to be subject to the same obligations and to have the same rights which apply to the Contractor under the Conditions of the Contract, including, without excluding others, those stated in Article 3, this Article 6 and Articles 10, 11 and 12.

6.2 MUTUAL RESPONSIBILITY

6.2.1 The Contractor shall afford the Owner and separate contractors reasonable opportunity for introduction and storage of their materials and equipment and performance of their activities, and shall

connect and coordinate the Contractor's construction and operations with theirs as required by the Contract Documents.

6.2.2 If part of the Contractor's Work depends for proper execution or results upon construction or operations by the Owner or a separate contractor, the Contractor shall, prior to proceeding with that portion of the Work, promptly report to the Consultant apparent discrepancies or defects in such other construction that would render it unsuitable for such proper execution and results. Failure of the Contractor so to report shall constitute an acknowledgment that the Owner's or separate contractor's completed or partially completed construction is fit and proper to receive the Contractor's Work, except as to defects not then reasonably discoverable.

6.2.3 The Owner shall be reimbursed by the Contractor for costs incurred by the Owner which are payable to a separate contractor because of delays, improperly timed activities or defective construction of the Contractor or any Subcontractors. The Owner shall be responsible to the Contractor for costs incurred by the Contractor because of delays, improperly timed activities, and damage to the Work or defective construction of a separate contractor.

6.2.4 The Contractor shall promptly remedy damage wrongfully caused by the Contractor or Subcontractors to completed or partially completed construction or to property of the Owner or separate contractors as provided in Subparagraph 10.2.5.

6.3 OWNER'S RIGHT TO CLEAN UP

6.3.1 If a dispute arises among the Contractor, separate contractors and the Owner as to the responsibility under their respective contracts for maintaining the premises and surrounding area free from waste materials and rubbish, the Owner may clean up and the Consultant may allocate the cost among those responsible.

ARTICLE 7 CHANGES IN THE WORK

7.1 GENERAL

7.1.1 Changes in the Work may be accomplished after execution of the Contract, and without invalidating the Contract, solely by Change Order, Construction Change Directive or order for a minor change in the Work, subject to the limitations stated in this Article 7 and elsewhere in the Contract Documents.

7.1.2 A Change Order shall be based upon agreement among the Owner, Contractor and Consultant; a Construction Change Directive requires agreement by the Owner and Consultant and may or may not be agreed to by the Contractor; an order for a minor change in the Work may be issued by the Consultant alone.

7.1.3 Changes in the Work shall be performed under applicable provisions of the Contract Documents, and the Contractor shall proceed promptly, unless otherwise provided in the Change Order, Construction Change Directive or order for a minor change in the Work.

7.1.4 Before effectuating a change in the Work, the Owner may request the Contractor to propose the amount of change in the Contract Sum, if any, and the extent of change in the Contract Time, if any, arising from the proposed change in the Work. The Contractor shall submit its responsive proposal as soon as possible and within 14 days and shall in good faith specify the components and amounts by which the Contract Sum and/or Contract Time would change. Labor, materials and equipment shall be limited to and itemized in the manner described in Paragraph 7.5 for the Contractor and major Subcontractors. If the Contractor fails to respond within this time, the Owner may withhold some or all of a progress payment otherwise due until the tardy proposal is received. If the Owner accepts the proposal in writing, the Owner will be immediately bound, the change will be included in a future Change Order, and the change in the Work shall commence expeditiously. The Owner may reject the proposal, in which case the Owner may either not effectuate the change in the Work or may order the change through a Construction Change

Directive or an order for a minor change in the Work. The Consultant may confer directly with Subcontractors of any tier concerning any item proposed to the Owner under this Article.

7.2 CHANGE ORDERS

7.2.1 A Change Order is a written instrument which may be prepared by the Consultant and signed by the Owner, Contractor and which may be signed by the Consultant, stating their agreement upon all of the following:

.1 change in the Work;

.2 the amount of the adjustment, if any, in the Contract Sum; and

.3 the extent of the adjustment, if any, in the Contract Time.

7.2.2 Methods used in determining adjustments to the Contract Sum may include those listed in Subparagraph 7.3.3. Agreement on a Change Order shall constitute full and final settlement of all issues and matters related to the change in Work which is subject to the Change Order including, without limitation, any and all direct and indirect costs and all adjustments in the Contract Time and Sum. There shall be no fee due or to become due to the Contractor related to deductive Change Orders.

7.3 CONSTRUCTION CHANGE DIRECTIVES

7.3.1 A Construction Change Directive is a written order which may be prepared by the Consultant and signed by the Owner, and which may be signed by the Consultant, directing a change in the Work prior to agreement on adjustment, if any, in the Contract Sum or Contract Time, or both. The Owner may by Construction Change Directive, without invalidating the Contract, order changes in the Work within the general scope of the Contract consisting of additions, deletions or other revisions, the Contract Sum and Contract Time being adjusted accordingly.

7.3.2 A Construction Change Directive shall be used in the absence of total agreement on the terms of a Change Order.

7.3.3 If the Construction Change Directive provides for an adjustment to the Contract Sum, the adjustment shall be based on one of the following methods:

.1 mutual acceptance of a lump sum properly itemized and supported by sufficient substantiating data to permit evaluation;

.2 unit prices stated in the Contract Documents or subsequently agreed upon;

.3 cost to be determined in a manner agreed upon by the parties (accompanied by an itemized estimate of probable cost) and a mutually acceptable fixed or percentage fee; or

.4 as provided in Subparagraph 7.3.6.

7.3.4 Upon receipt of a Construction Change Directive, the Contractor shall promptly proceed with the change in the Work involved. As soon as possible and within seven (7) days of receipt the Contractor shall advise the Consultant in writing of the Contractor's agreement or disagreement with the proposed adjustment or the method, if any, provided in the Construction Change Directive for determining the proposed adjustment in the Contract Sum or Contract Time. The Contractor's response shall reasonably specify the reasons for its disagreement and the adjustment or other terms that it proposes. Without such timely written response, the Contractor shall conclusively be deemed to have accepted the Owner's adjustment. The Contractor's disagreement shall not relieve the Contractor of its obligations to comply promptly with any written notice issued by the Owner or the Consultant. The adjustment shall then be determined by the Consultant in accordance with the provisions of the Contract Documents.

7.3.5 A Construction Change Directive signed by the Contractor indicates the agreement of the Contractor therewith, including adjustment in Contract Sum and Contract Time or the method for determining them. Such agreement shall be effective immediately and shall be incorporated into and be construed and interpreted as a Change Order.

7.3.6 If the Contractor does not respond promptly or disagrees with the method for adjustment in the Contract Sum, or if cost is to be determined under Clause 7.3.3.3, the Contractor shall keep and present itemized in the categories of Paragraph 7.5 and in such form as the Consultant may prescribe, an itemized accounting together with appropriate supporting data. In order to facilitate checking of such quotations, all proposals, except those so minor that their propriety can be seen be inspection, shall be accompanied by complete itemization of costs, including labor, equipment, material and subcontract costs. Labor, equipment and materials shall be itemized in the manner described in Paragraph 7.5. When major cost items arise from Subcontractors of any tier, these items shall also be similarly itemized. Approval may not be given without such itemization. Failure to provide data within 21 days of the Owner's request shall constitute waiver of any Claim for changes in the Contract Time or Contract Sum. The total cost of any change, including a Claim under Paragraph 4.3 or 4.4, shall be limited to the reasonable value, as determined by the Consultant (subject to appeal through the dispute resolution procedure of Paragraph 4.4), of the items in Paragraph 7.5. Unless otherwise agreed in writing by the Owner, the cost shall not exceed the lower of the prevailing cost for the work in the locality of the Project or the cost of the work in the current edition of R.S. Means Company, Inc., Building Construction Cost Data as adjusted to local costs and conditions. The Consultant and the Owner may communicate directly with Subcontractors concerning costs of any Work included in a Construction Change Directive. If the Contractor disagrees with the method for the adjustment in the Contract Time, the adjustment and method shall be referred to the Consultant for determination, and any adjustment shall be limited to the change in the actual critical path of the Contractor's Construction Schedule directly caused thereby.

7.3.7 The amount of credit to be allowed by the Contractor to the Owner for a deletion or change which results in a net decrease in the Contract Sum shall be the largest of (1) the reasonable and prevailing value of the deletion or change; (2) the line item value in the Schedule of Values: or (3) the actual net cost as confirmed by the Consultant. When both additions and credits covering related Work or substitutions are involved in a change, the allowance for overhead and profit shall be figured on the basis of net increase, if any, with respect to that change.

7.3.8 Pending final determination of the total cost of a Construction Change Directive to the Owner and provided that any amounts not in dispute for such changes in the Work shall be included in Applications for Payment accompanied by a Change Order indicating the parties' agreement with part or all of such costs. If the Contractor adds a reservation of rights that has not been initialed b the Owner, all the amounts for the Construction Change Directive shall be considered disputed unless costs are renegotiated or the reservation is withdrawn or changed in a manner satisfactory to the Owner.

7.3.9 When the Owner and Contractor agree with the determination made by the Consultant concerning the adjustments in the Contract Sum and Contract Time, or otherwise reach agreement upon the adjustments, such agreement shall be effective immediately and shall be recorded by preparation and execution of an appropriate Change Order.

7.4 MINOR CHANGES IN THE WORK

7.4.1 The Consultant and the Owner will have authority to order minor changes in the Work not involving adjustment in the Contract Sum or extension of the Contract Time and not inconsistent with the intent of the Contract Documents. Such changes shall be effected by written order and shall be binding on the Owner and Contractor. The Contractor shall carry out any and all such written orders promptly. If at the option of the Owner, the Consultant exercises any authority, right(s) or duty(ies) stated anywhere in this Agreement or any other Contract Document as an authority, right or duty the Consultant may perform, the Contractor shall comply with, be bound by and respond therewith and thereto, including, but not limited to, the exercise of any authority, right(s) or duty(ies) related to minor work.

7.5 PRICING COMPONENTS

7.5.1 The total cost of any changed Work or of any other increase or decrease in the Contract Sum, including a Claim, shall be limited to the following components:

.1 Basic wages: The hourly wage (without markup, fringe benefits or labor burden) not to exceed that specified in the applicable "Intent to Pay Prevailing Wage" for the laborers, apprentices, journeymen, and foremen performing and/or directly supervising the changed Work on the site. The premium portion of overtime wages is not included unless pre-approved by the Owner.

.2 Fringe benefits: Fringe benefits paid by the Contractor as established by the Oregon Bureau of Labor and Industries or contributed to labor trust funds as itemized fringe benefits, whichever is applicable. Costs paid or incurred by the Contractor for vacations, per diem, bonuses, stock options, or discretionary payments to employees are not reimbursable.

.3 Workers' insurances: Direct contributions to the State of Oregon as industrial insurance; medical aid; and supplemental pension by class and rates established by the Oregon Bureau of Labor and Industries.

.4 Federal insurances: Direct contributions required by the Federal Insurance Compensation Act (FICA); Federal Unemployment Tax Act (FUTA); and State Unemployment Compensation Act (SUCA).

7.5.2 Direct material costs: This is an itemization, including material invoice, of the quantity and cost of additional materials reasonable and necessary to perform the change in the Work. The unit cost shall be based upon the net cost after all discounts or rebates, freight costs, express charges, or special delivery costs, when applicable. No lump sum costs will be allowed except when approved in advance by the Consultant. Discounts and rebates based on prompt payment may be included, however, if the Contractor offers but the Owner declines the opportunity.

7.5.3 Construction equipment usage costs: This is an itemization of the actual length of time that construction equipment appropriate for the Work will be used solely on the change in the Work at the site times the applicable rental cost as established by the lower of the local prevailing rate published in The Rental Rate Blue Book by Data Quest, San Jose, California, or the actual rate paid to an unrelated third party as evidenced by rental receipts. Actual, reasonable mobilization costs are permitted if the equipment is brought to the Site solely for the change in the Work. If equipment is required for which a rental rate is not established by The Rental Rate Blue Book, an agreed rental rate shall be established for the equipment, which rate and use must be approved by the Consultant prior to performing the work. If more than one rate is applicable, the lowest rate will be utilized. The rates in effect at the time of the performance of the changed Work are the maximum rates allowable for equipment of modern design and in good working condition and include full compensation for furnishing all fuel, oil, lubrication, repairs, maintenance, and insurance. Equipment not of modern design and/or not in good working condition will have lower rates. Hourly, weekly, and/or monthly rates, as appropriate, will be applied to yield the lowest total cost. The rate for equipment necessarily standing by for future use on the changed Work shall be 50% of the rate established above. The total cost of rental allowed shall not exceed the cost of purchasing the equipment outright.

7.5.4 Cost of change in insurance or bond premium. This is defined as:

.1 Contractors' liability insurance: The cost (expressed as a percentage) of any changes in the Contractor's liability insurance arising directly from the changed Work; and

.2 Public works bond: The cost (expressed as a percentage) of the change in the Contractor's premium for the Contractor's bond arising directly from the changed Work.

Upon request, the Contractor shall provide the Owner with supporting documentation from its insurer or surety of any associated cost incurred.

7.5.5 Subcontractor costs: These are payments the Contractor makes to Subcontractors for changed Work performed by Subcontractors. The Subcontractors' cost of changed Work shall be determined in the same manner as prescribed in this Paragraph 7.5.

7.5.6 Fee: This is the allowance for all combined overhead, profit and other costs, including all office, home office and site overhead (including project manager, project engineers, project foreman, estimator, superintendent and their vehicles), taxes (except for sales tax), warranty, safety costs, quality control/assurance, purchasing, small or hand tool or expendable charges, preparation of as-built drawings, impact on unchanged Work, Claim preparation, and delay and impact costs of any kind, added to the total cost to the Owner of any Change Order, Construction Change Directive, Claim or any other claim of any kind on this Project. It shall be limited in all cases to the following schedule:

.1 The Contractor shall receive 15% of the cost of any materials supplied or work properly performed by the Contractor's own forces.

.2 The Contractor shall receive 8% of the amount owed directly to a Subcontractor or Supplier for materials supplied or work properly performed by that Subcontractor or Supplier.

.3 Each Subcontractor of any tier shall receive 12% of the cost of any materials properly supplied or work properly performed by its own forces.

.4 Each Subcontractor of any tier shall receive 8% of the amount it properly incurs for materials supplied or work properly performed by its suppliers or subcontractors of any lower tier.

.5 The cost to which this Fee is to be applied shall be determined in accordance with Paragraph 7.5.1-7.5.4.

.6 The total summed Fee of the Contractor and all Subcontractors of any tier shall not exceed 25%. None of the fee percentages authorized in this Paragraph 7.5.6 may be compounded with any other fee percentage or percentages authorized in this paragraph.

If a change in the Work involves both additive and deductive items, the appropriate Fee allowed will be added to the net difference of the items. If the net difference is negative, no Fee will be added to the negative figure as a further deduction.

ARTICLE 8 TIME

8.1 DEFINITIONS

8.1.1 Unless otherwise provided, Contract Time is the period of time, including authorized adjustments, allotted in the Contract Documents for Substantial Completion of the Work.

8.1.2 The date of commencement of the Work is the date established in the Agreement.

8.1.3 The date of Substantial Completion is the date certified by the Consultant in accordance with Paragraph 9.8.

8.1.4 The term "day" as used in the Contract Documents shall mean calendar day unless otherwise specifically defined. Time is expressly declared of the essence as it relates to the performance of the Contractor's Work. Without limiting the foregoing, Contractor must complete the Project in the manner required hereby on the date required hereby. The failure to so complete the Project shall cause the Owner

to incur substantial costs and expenses, including, but not limited to, those related to staffing, teachers, management, transportation, publication, communication, signage, and rental, all of which costs and expenses the Contractor shall be liable for.

8.2 PROGRESS AND COMPLETION

8.2.1 Time limits stated in the Contract Documents are of the essence of the Contract. By executing the Agreement the Contractor confirms that the Contract Time is a reasonable period for performing the Work.

8.2.2 The Contractor shall not knowingly, except by agreement or instruction of the Owner in writing, prematurely commence operations on the site or elsewhere prior to the effective date of insurance required by Article II to be furnished by the Contractor and Owner. The date of commencement of the Work shall not be changed by the effective date of such insurance. The Contractor shall notify the Owner in writing not less than five days or other agreed period before commencing the Work.

8.2.3 The Contractor shall proceed expeditiously with adequate forces and shall achieve Substantial Completion and Final Completion within the Contract Time.

8.3 DELAYS AND EXTENSIONS OF TIME

8.3.1 If the Contractor is unreasonably delayed at any time .in the commencement or progress of the Work (1) by an act or neglect of the Owner or Consultant, or of an employee of either, or of a separate contractor employed by the Owner, or (2) by changes ordered in the Work only to the extent reflected in approved Change Orders providing for specific extensions of the Contract Time, or (3) b unanticipated, abnormal weather (see Paragraph 4.3.7), or (4) by unexpected industry-wide labor disputes, fire, unusual delay in deliveries, governmental delays (including permit delays not caused by the Owner), unavoidable casualties or other causes beyond the Contractor's control, or (5) by delay authorized by the Owner pending mediation and litigation, or (6) by other causes which the Consultant determines may justify delay, then the Contract Time shall be extended by Change Order for such reasonable time, limited to the change in the actual critical path of the Contractor's Construction Schedule directly caused thereby, as the Consultant may determine consistent with the provisions of the Contract Documents. In no event, however, shall the Contractor be entitled to any extension of time absent proof of (1) delay to an activity on the critical path of the Contract Schedule, also as to actually delay the Project completion beyond the date of Substantial Completion, or (2) delay transforming an activity into the critical path of the Contract Schedule, so as to actually delay the Project completion beyond the date of Substantial Completion.

8.3.2 Claims relating to time shall be made in accordance with applicable provisions of Paragraphs 4.3 and 4.4. That the Owner or Consultant may be aware of the occurrence or existence of a delay through means other than the Contractor’s written notification shall not constitute a waiver of a timely or written notice or Claim.

8.3.3 This Paragraph 8.3 does not preclude recovery of damages for delay by either party under other provisions of the Contract Documents.

.1 If the delay was not caused by the Owner, the Contractor, a Subcontractor of any tier, or the Consultant, or anyone acting on behalf of any of them, the Contractor is entitled only to an increase in the Contract Time in accordance with the Contract Documents, but not a change in the Contract Sum. If the delay was caused by the Contractor, a Subcontractor of any tier, or anyone acting on behalf of any of them, the Contractor is not entitled to an increase in the Contract Time or in the Contract Sum. The Contractor shall not recover damages, an equitable adjustment or an increase in the Contract Sum or Contract Time from the Owner where the Contractor could have reasonably avoided the delay by the exercise of due diligence. The Contractor shall be able to recover an increase in the Contract Sum, consistent with the terms of the Contract Documents, only if a delay in the critical path was unreasonable and caused by the Owner. A Subcontractor is not entitled

to damages, an equitable adjustment or an increase in the Contract Sum for any delay that does not increase the Contract Time.

.2 In the event the Contractor (including any Subcontractors of any tier) is held to be entitled to damages from the Owner for delay beyond the payment permitted in Subparagraph 7.5.6, it is agreed that the total combined damages to the Contractor and any Subcontractors of any tier for each day of delay shall be limited to the same daily liquidated damage rate specified in the Contract Documents due the Owner for the Contractor's delay in achieving Substantial Completion. No damages will be allowed for any time prior to 14 days before receipt of written notice of the Claim of the delay pursuant to Subparagraph 4.4.2.

.3 The Contractor shall not in any event be entitled to damages arising out of actual or alleged loss of efficiency; morale, fatigue, attitude, or labor rhythm; constructive acceleration; home office overhead; expectant under run; trade stacking; reassignment of workers; rescheduling of work, concurrent operations; dilution of supervision; learning curve; beneficial or joint occupancy; logistics; ripple; season change; extended overhead; profit upon damages for delay; impact damages; or similar damages.

.4 The Contractor shall not be entitled to any adjustment in the Contract Time or in the Contract Sum, or to any additional payment of any sort, by reason of the loss or the use of any float time, including time between the Contractor's anticipated completion date and the end of the Contract Time, whether or not the float time is described as such on the Contractor's Construction Schedule.

ARTICLE 9 PAYMENTS AND COMPLETION

9.1 CONTRACT SUM

9.1.1 The Contract Sum is stated in the Agreement and, including authorized adjustments, is the total amount payable by the Owner to the Contractor for performance of the Work under the Contract Documents.

9.2 SCHEDULE OF VALUES

9.2.1 Within seven (7) calendar days of the execution of this the Agreement and with each Application for Payment, the Contractor shall submit to the Consultant a schedule of values in a form satisfactory to the Consultant and Owner allocated to various portions of the Work, prepared in such form and supported by such data to substantiate its accuracy as the Consultant may require. This schedule, unless objected to by the Consultant or Owner, shall be used as a basis for reviewing the Contractor's Applications for Payment.

9.3 APPLICATIONS FOR PAYMENT

9.3.1 At least ten days before the date established for each progress payment, the Contractor shall submit to the Consultant an itemized Application for Payment for operations completed in accordance with the schedule of values. Such application shall be notarized and supported by such data substantiating the Contractor's right to payment as the Owner or Consultant may require, such as copies of requisitions from Subcontractors and material suppliers, and reflecting Retainage if provided for in the Contract Documents.

9.3.1.1 As provided in Subparagraph 7.3.8, such applications may include requests for payment on account of changes in the Work which have been properly authorized by Construction Change Directives, or by interim determinations of the Consultant, but not yet included in Change Orders.

9.3.1.2 Such applications may not include requests for payment for portions of the Work for which the Contractor does not intend to pay to any Subcontractor including any material supplier.

9.3.2 Unless otherwise provided in the Contract Documents, payments shall be made on account of materials and equipment delivered and suitably stored at the site for subsequent incorporation in the Work. If approved in advance by the Owner, payment may similarly be made for materials and equipment suitably stored off the site at a location agreed upon in writing. Payment for materials and equipment stored on or off the site shall be conditioned upon compliance by the Contractor with procedures satisfactory to the Owner to establish the Owner's free and clear title to such materials and equipment or otherwise protect the Owner's interest, and shall include the costs of applicable insurance, storage and transportation to the site for such materials and equipment stored off the site.

9.3.3 The Contractor warrants that title to all Work covered by an Application for Payment will pass to the Owner no later than the time of payment. The Contractor further warrants that upon submittal of an Application for Payment all Work for which Certificates for Payment have been previously issued and payments received from the Owner shall, be free and clear of any and all liens, claims, security interests or encumbrances in favor of the Contractor, and any all Subcontractors, including any material suppliers, or other persons or entities making a claim by reason of having provided labor, materials and equipment relating to the Work.

9.4 CERTIFICATES FOR PAYMENT

9.4.1 The Consultant may, within seven (7) days after receipt of the Contractor's Application for Payment, either issue to the Owner a Certificate for Payment, with a copy to the Contractor, for such amount as the Consultant determines is properly due, or notify the Contractor and Owner in writing of the Consultant's reasons for withholding certification in whole or in part as provided in Subparagraph 9.5.1.

9.4.2 The issuance of a Certificate for Payment will constitute a representation by the Consultant to the Owner, based on the Consultant's evaluation of the Work and the data comprising the Application for Payment, that the Work has progressed to the point indicated and that, to the best of the Consultant's knowledge, information and belief, the quality of the Work is in accordance with the Contract Documents. The foregoing representations are subject to an evaluation of the Work for conformance with the Contract Documents upon Substantial Completion, to results of subsequent tests and inspections, to correction of minor deviations from the Contract Documents prior to completion and to specific qualifications expressed by the Consultant. However, the issuance of a Certificate for Payment will not be a representation that the Consultant has (I) made exhaustive or continuous on-site inspections to check the quality or quantity of the Work, (2) reviewed construction means, methods, techniques, sequences or procedures, (3) reviewed copies of requisitions received from Subcontractors and material suppliers and other data requested by the Owner to substantiate the Contractor's right to payment, or (4) made examination to ascertain how or for what purpose the Contractor has used money previously paid on account of the Contract Sum.

9.5 DECISIONS TO WITHHOLD CERTIFICATION

9.5.1 The Consultant may withhold a Certificate for Payment in whole or in part, to the extent reasonably necessary to protect the Owner, if, in the Consultant's opinion the representations to the Owner required by Subparagraph 9.4.2 cannot be made. If the Consultant is unable to certify payment in the amount of the Application, the Consultant may notify the Contractor and Owner as provided in Subparagraph 9.4. I. If the Contractor and Consultant cannot agree on a revised amount, the Consultant may promptly issue a Certificate for Payment for the amount for which the Consultant is able to make such representations to the Owner. The Consultant may also withhold a Certificate for Payment or, because of subsequently discovered evidence, may nullify the whole or a part of a Certificate for Payment previously issued, to such extent as

may be necessary in the Consultant's opinion to protect the Owner from loss for which the Contractor is responsible, including loss resulting from acts and omissions described in Subparagraph 3.3.2, because of:

.1 defective Work not remedied;

.2 third party claims filed or reasonable evidence indicating probable filing of such claims unless security is acceptable to the Owner is provided by the Contractor;

.3 failure of the Contractor to make payments properly to Subcontractors or for labor, materials or equipment;

.4 reasonable evidence that the Work cannot be completed for the unpaid balance of the Contract Sum;

.5 damage to the Owner or another contractor;

.6 reasonable evidence that the Work will not be completed within the Contract Time, and that the unpaid balance would not be adequate to cover actual or liquidated damages for the anticipated delay; or

.7 Any other failure to comply with the Contract Documents or Contractor's persistent failure to carry out the Work in accordance with the Contract Documents.

9.5.2 When the above reasons for withholding certification are removed, certification will be made for amounts previously withheld.

9.6 PROGRESS PAYMENTS

9.6.1 After the Consultant has received all the necessary documents and properly issued a Certificate for Payment, the Owner shall make payment in the manner and within the time provided in the Contract Documents, and may so notify the Consultant.

9.6.2 If not done previously, The Contractor shall promptly pay each Subcontractor, upon receipt of payment from the Owner, out of the amount paid to the Contractor on account of such Subcontractor's portion of the Work, the amount to which said Subcontractor is entitled, reflecting percentages actually retained from payments to the Contractor on account of such Subcontractor's portion of the Work. The Contractor shall, by appropriate agreement with each Subcontractor, require each Subcontractor to make payments to Sub-subcontractors in a similar manner.

9.6.3 The Consultant or Owner may on request, furnish to any Subcontractors or any other person or entity, if practicable, information regarding percentages of completion or amounts applied for by the Contractor and action taken thereon by the Consultant and Owner on account of portions of the Work done by such Subcontractor.

9.6.4 Neither the Owner nor Consultant shall have an obligation to pay nor to see to the payment of money to a Subcontractor except as may otherwise be required by law.

9.6.5 Payment to material suppliers shall be treated in a manner similar to that provided for Subcontractors because by the definitions of this Agreement they are a Subcontractor.

9.6.6 A Certificate for Payment, a progress payment, or partial or entire use or occupancy of the Project by the Owner shall not constitute acceptance of Work not in accordance with the Contract Documents.

9.6.7 Payments received by the Contractor for Work properly performed by Subcontractors and suppliers shall be held by the Contractor for those Subcontractors or suppliers who performed Work or furnished materials, or both, under contract with the Contractor for which payment was made by the Owner. Nothing contained herein shall require money to be placed in a separate account and not commingled with money of the Contractor, shall create any fiduciary liability or tort liability on the part of the Contractor for breach of trust or shall entitle any person or entity to an award of punitive damages against the Contractor for breach of the requirements of this provision.

9.7 FAILURE OF PAYMENT

9.7.1 If the Consultant does not issue a Certificate for Payment, through no fault of the Contractor, within seven days after receipt of the Contractor's Application for Payment, or if the Owner does not pay the Contractor within seven days after the date established in the Contract Documents the amount certified by the Consultant or awarded by arbitration, then the Contractor may, upon seven additional days' written notice to the Owner and Consultant, stop the Work until payment of the amount owing has been received. The Contract Time shall be extended appropriately and the Contract Sum shall be increased by the amount of the Contractor's reasonable costs of shut-down, delay and start-up, plus interest as provided for in the Contract Documents.

9.8 SUBSTANTIAL COMPLETION

9.8.1 Substantial Completion is the stage in the progress of the Work, or portion thereof designated and approved by the Consultant and Owner, when the Work or designated portion thereof is sufficiently complete in accordance with the Contract Documents so that the Owner can fully occupy and utilize the Work, or designated portion thereof, for its intended use. All Work other than incidental corrective or punch list work and final cleaning shall have been completed, including but not limited to the following:

.1 Obtain temporary occupancy permits, pressure vessel permits, elevator permits, and similar approvals or certificates by governing authorities and franchised services, assuring the Owner’s full access and use of completed Work.

.2 Submit the Contractor’s punch list of items to be completed or corrected and written request for inspection.

.3 Complete final start-up, testing, and commence instruction and training sessions on all major building systems, including HVAC and controls, intercom, data communications, fire alarm, telephone, fire sprinkler, security and clocks.

.4 Make final changeover of locks and transmit new keys to the Owner, and advise the Owner of the changeover in security provisions.

.5 Discontinue or change over and remove temporary facilities and services from the project site.

.6 Advise the Owner on coordination of shifting insurance coverages, including proof of extended coverages as required.

The Work is not Substantially Complete unless the Consultant reasonably judges that the Work can achieve Final completion within 60 days, appropriate cleaning has occurred, all systems and parts are commissioned and usable, including balancing of the HVAC system, utilities are connected and operating normally, all required temporary occupancy permits have been issued and the work is accessible by normal vehicular and pedestrian traffic routes. The fact that the owner may occupy the Work or a designated portion thereof does not indicate that the work is Substantially Complete or is acceptable in whole or in part, nor does such occupation toll or change any liquidated damages due the Owner.

9.8.1.2 Date of commissioning of Critical Systems. The following systems of the Work, and any other systems designated in the Contract Documents, are considered "Critical Systems": the HVAC system, the data communication system(s), the intercom system, the life safety system(s) and the security system. When the Contractor considers that the Critical Systems are up and running and ready for normal operation as specified for each phase, the Contractor shall so notify the Consultant in writing a minimum of 14 days prior to the Date of Substantial Completion for that portion or phase as fixed in the contract Documents. The Consultant will then schedule a pre-commissioning inspection of these systems to determine whether the Critical Systems are complete and ready for normal operation. If the Consultant's inspection discloses that the Critical Systems are not Substantially Complete or that any item which is not in accordance with the requirements of the Contract Documents, the Contractor shall expeditiously, and before the Date of Commissioning, complete or correct such item upon notification by the Consultant. The Contractor shall then submit a request for another inspection by the Consultant to determine completion of the Critical Systems and pay the costs associated with the re-inspection, including fees of the Consultant and its consultants. When the Critical Systems are complete, the Consultant will notify the Owner in writing, which shall establish the Date of Commissioning. Warranties on the Critical Systems required by the Contract Documents shall commence on the Date of Commissioning, unless otherwise provided. The Date of Commissioning shall not have an effect on the duties of the parties at Substantial Completion.

9.8.1.3 Indemnification. The Contractor shall defend, indemnify, and hold harmless the Owner and the Consultant and their agents, employees, and consultants, successors and assigns from and against all claims, damages, losses and expenses of third parties, direct and indirect, or consequential, including costs, design professional fees, and attorneys' fees incurred by the owner related to such claims and in proving the right to indemnification, arising out of or resulting from the failure of the Contractor to attain the Date of Commissioning less than 30 days prior to the Date of Substantial Completion fixed by the Contract Documents. In particular, the Contractor acknowledges that a 30-day period after the Date of Commissioning and prior to occupancy is specified during which the HVAC system is scheduled to operate under a procedure intended to dissipate out-gassing that may occur from interior and other materials.

9.8.2 When the Contractor considers that the Work, or a portion thereof which the Owner agrees to accept separately, is substantially complete, the Contractor shall prepare and submit to the Consultant and Owner a comprehensive list of items to be completed or corrected prior to final payment. The Contractor shall proceed promptly to complete and correct all items on the list. Failure to include an item on such list does not alter the responsibility of the Contractor to complete all Work in accordance with the Contract Documents.

9.8.3 Upon receipt of the Contractor's list, the Consultant and the Owner will make an inspection to determine whether the Work or designated portion thereof is substantially complete. If the Consultant's inspection discloses any item, whether or not included on the Contractor's list, which is not sufficiently complete in accordance with the Contract Documents so that the Owner can occupy and utilize the Work or designated portion thereof for its intended use, the Contractor shall, before issuance of the Certificate of Substantial Completion, complete or correct such item upon notification by the Consultant or Owner. In such case, the Contractor shall then submit a request for another inspection by the Consultant to determine Substantial Completion. If the Owner or Consultant determines that the Work or designated portion is not

substantially complete, then the contractor shall expeditiously complete the Work or designated portion, request another inspection and pay all costs associated with any re-inspection.

9.8.4 When the Work or designated portion thereof is substantially complete, the Consultant may prepare a Certificate of Substantial Completion which, upon approval of the Owner, may establish the date of Substantial Completion, shall establish responsibilities of the Owner and Contractor for security, maintenance, heat, utilities, damage to the Work and insurance, and shall fix the time within which the Contractor shall finish all items on the list accompanying the Certificate. Warranties required by the Contract Documents shall commence on the date of Substantial Completion of the Work or designated portion thereof unless otherwise provided in the Certificate of Substantial Completion. The Contractor shall attach and submit with the executed Certificate or Substantial Completion a written list of each outstanding and unresolved Claim; any Claim not so submitted and identified, other than Retainage and the undisputed balance of the Contract Sum, shall be deemed waived and abandoned. If the Owner or Consultant determines that the Work or designated portion is not substantially complete, the Contractor shall expeditiously complete the Work or designated portion, again request an inspection, and pay the costs associated with the re-inspection, including Consultant and consultant fees.

9.8.5 The Certificate of Substantial Completion shall be submitted to the Owner and Contractor for their written acceptance of responsibilities assigned to them in such Certificate. Any items not included by the Consultant but required or necessary for Final Completion of the Contract shall be supplies and installed by the Contractor as a part of the Contract Sum, notwithstanding their not being recorded by the Consultant. Upon written acceptance of the Certificate of Substantial Completion and upon the Contractor's application, the Owner shall make payment as provided in the Contract Documents. Such payment shall be adjusted for Work that is incomplete or not in accordance with the requirements of the Contract Documents. No further payment will be due or owing until the payment at Final Completion.

9.8.6 The Contractor shall prepare, continue to monitor with the Consultant, and cause to be completed, all punch lists with respect to the activity of each Subcontractor and report weekly to the Owner on outstanding punch list items. Beginning 90 days before the scheduled date of Substantial Completion, the Contractor shall prepare reports weekly, identifying items to be competed in order to obtain temporary and permanent certificates of occupancy and make recommendations to the Owner with respect to effectuating the earliest possible completion.

9.9 PARTIAL OCCUPANCY OR USE

9.9.1 The Owner may occupy or use any completed or partially completed portion of the Work at any stage when such portion is designated by separate agreement with the Contractor, provided such occupancy or use is consented to by the insurer as required under Clause 11.3.1.5 and authorized by public authorities having jurisdiction over the Work. Such partial occupancy or use may commence whether or not the portion is substantially complete, provided the Owner and Contractor have accepted in writing the responsibilities assigned to each of them for payments, Retainage, if any, security, maintenance, heat, utilities, damage to the Work and insurance, and have agreed in writing concerning the period for correction of the Work and commencement of warranties required by the Contract Documents. When the Contractor considers a portion substantially complete, the Contractor shall prepare and submit a list to the Consultant and Owner as provided under Subparagraph 9.8.2. Consent of the Contractor to partial occupancy or use shall not be unreasonably withheld. The stage of the progress of the Work shall be determined by written agreement between the Owner and Contractor or, if no agreement is reached, by decision of the Consultant.

9.9.2 Immediately prior to such partial occupancy or use, the Owner and Contractor shall, and Consultant may, jointly inspect the area to be occupied or portion of the Work to be used in order to determine and record the condition of the Work.

9.9.3 Unless otherwise agreed upon, partial occupancy or use of a portion or portions of the Work shall not constitute acceptance of Work not complying with the requirements of the Contract Documents.

9.10 FINAL COMPLETION AND FINAL PAYMENT

9.10.1 FINAL COMPLETION.

9.10.1.1 If, at thirty (30) days after the Date of Substantial Completion, the Owner considers that the punch list items are unlikely to be completed within sixty (60) days of Substantial Completion, the Owner may, upon seven (7) days' written notice to the contractor, take over and perform some or all of the punch list items. If the Contractor fails to correct the deficiencies within the period required, the Owner may deduct the actual cost of performing this punch list work, including costs, plus 10% to account for the Owner's transaction costs from the Contract Sum.

9.10.1.2 Upon receipt of written notice from the Contractor that the Work is ready for final inspection and acceptance, the Consultant may promptly make such inspection accompanied by the Contractor and, when the Consultant finds all punch list items fully completed and the Work acceptable under the Contract Documents and the Contract fully performed, the Consultant may promptly notify the Contractor and the Owner in writing that to the best of the Consultant's knowledge, information and belief, and on the basis of the Consultant's on-site visits and inspections, the Work has been completed in accordance with terms and conditions of the Contract Documents. If the Consultant determines that some or all of the punch list items are not fully completed, then the Contractor shall be responsible to the Owner for all costs, including re-inspection fees, associated with any subsequent Consultant's inspection. The Consultant's final Certificate for Payment will constitute a further representation that conditions listed in Subparagraph 9.10.2 as precedent to the Contractor's being entitled to final payment have been fulfilled.

9.10.1.3 The Contractor is liable for, and the Owner may deduct from any amounts due the Contractor, all Consultant, architect, engineer or other design consultant fees incurred by the Owner for services performed more than 60 days after Substantial Completion of all the Work, whether or not those services would have been performed prior to that date had Final Completion been achieved in a timely manner.

9.10.1.4 When the Consultant finds that the Work has been concluded, a final occupancy permit has been issued, and the Contractor has submitted all the items in Subparagraph 9.10.2.1 to the Consultant, the Contractor may submit a final Application for Payment. The Consultant will then promptly issue a final Certificate for Payment stating that the entire balance found to be due the Contractor and noted in said final Certificate is due and payable. The Consultant's final Certificate for Payment shall establish the date of Final Completion upon its execution by the Owner.

9.10.1.5 "Final Completion" will be attained when the Contractor has accomplished the following:

.1 Complete all requirements listed in Paragraph 9.8 for Substantial Completion.

.2 Complete all remaining punch list items, notify Consultant and Owner that all work is complete.

.3 Obtain permanent occupancy permits.

.4 Submit final change order and final Application for Payment.

.5 Submit recorded documents, final property survey, and operation and maintenance manuals.

.6 Deliver tools, spare parts, extra stock of material and similar physical items to the Owner.

.7 Complete final cleaning.

.8 Complete instruction and train in sessions on all major building systems including HVAC, intercom data communications, fire alarm, telephone, fire sprinkler, security and clocks.

9.10.2 FINAL ACCEPTANCE AND PAYMENT

9.10.2.1 Final payment shall not become due until after the Owner's Board of Directors has formally accepted the Project "Final Acceptance". To achieve Final Acceptance, the Consultant must have issued a final Certificate of Payment under Subparagraph 9.10.1, Final Completion must have occurred, and the Contractor must have submitted to the Consultant the following:

.1 an affidavit that any and all payrolls, bills for materials and equipment, and other indebtedness connected with the Work for which the Owner or the Owner's property might be responsible or encumbered (less amounts withheld by Owner) have been paid or otherwise satisfied together with full and final unconditional waivers by the Contractor and all Subcontractors in a form and with content acceptable to the Owner, except for any Subcontractor claims that are specifically identified on the affidavit,

.2 a certificate evidencing that insurance required by the Contract Documents to remain in force after final payment is currently in effect and will not be canceled or allowed to expire until at least 30 days' prior written notice has been given to the Owner,

.3 a written statement that the Contractor knows of no substantial reason that the insurance will not be renewable to cover the period required by the Contract Documents,

.4 consent of surety, if any, to final payment,

.5 other data establishing payment or satisfaction of or protection against obligations, such as receipts, releases and waivers of liens, claims, security interests or encumbrances arising out of the Contract, to the extent and in such form as may be designated by the Owner. If a Subcontractor refuses to furnish a release or waiver required by the Owner, the Contractor shall furnish a bond satisfactory to the Owner to indemnify the Owner against such lien or cash deposit off such lien or claim whichever the Owner may request. Such cash deposit shall be paid with the Contractor's own funds. If such lien remains unsatisfied after payments are made, the Contractor shall refund to the Owner all money that the Owner may be compelled to pay in discharging such lien, including all costs and reasonable attorneys' fees,

.6 an “Affidavit of Wages” from the Contractor and each Subcontractor of every tier certified by all required governmental authorities.

.7 a letter from the Consultant indicating that the Work is complete and recommending Final Acceptance of the Project by the Owner.

.8 certification that all materials in the Work are "lead-free" and "asbestos-free," and

.9 all warranties, guarantees, training manuals, operation instructions, certificates, spare parts, maintenance stock, specified excess material, as-built drawings and other documents or items required by the Contract Documents or local governmental entities.

9.10.3 If, after Substantial Completion of the Work, final completion thereof is materially delayed through no fault of the Contractor, and the Consultant so confirms, the Owner shall, upon application by the Contractor and certification by the Consultant, and without terminating the Contract, make payment of the balance due for that portion of the Work fully completed and accepted to the extent permitted by statute. If the remaining balance for Work not fully completed or corrected is less than Retainage stipulated in the Contract Documents, and if bonds have been furnished, the written consent of surety to payment of the balance due for that portion of the Work fully completed and accepted shall be submitted by the Contractor to the Consultant prior to certification of such payment. Such payment shall be made under terms and conditions governing final payment, except that it shall not constitute a waiver of claims.

9.10.4 If a Subcontractor of any tier or supplier refuses to furnish a release or waiver required by the Owner the Owner may (a) retain in the fund, account, or escrow funds in such amount as to defray the cost of foreclosing the liens of such claims and to pay attorneys' fees, the total of which shall be no less than 150% of the claimed amount, or (b) accept a bond from the Contractor, satisfactory to the owner, to indemnify the Owner against such lien. If any such lien remains unsatisfied after all payments from the Retainage are made, the Contractor shall refund to the Owner all moneys that the Owner may be compelled to pay in discharging such lien, including all costs and reasonable attorneys' fees.

9.10.5 Release of Retainage. Retainage will be held and applied by the Owner as required by law.

Release of Retainage will be processed in the ordinary course of business upon expiration of sixty (60) days following Final Acceptance of the Work by the Owner provided that no notice of lien shall have been given as provided by law, and that no claims have been brought to the attention of the Owner and that the Owner has no claims under this Contract.

9.10.6 WAIVER OF CLAIMS

9.10.6.1 Final Payment by Owner. The making of final payment shall not constitute a waiver of any Claims by the Owner.

9.10.6.2 Final Payment to Contractor. Acceptance of final payment by the Contractor, or any Subcontractors including but not limited to any material supplier shall constitute a waiver of claims by that payee except those previously timely made in writing delivered to the Owner, Consultant and identified by that payee as unsettled and attached to Contractor's final Application for Payment.

9.10.6.3 Change Orders. The execution of a Change Order shall constitute a waiver of Claims by the Contractor arising out of the Work to be performed or deleted pursuant to the Change Order, except as specifically described in the Change Order. Reservations of rights will be deemed waived and are void unless the reserved rights are specifically described in detail to the satisfaction of the Owner and are initialed by the Owner.

9.10.7 The Contractor shall maintain books, ledgers, records, documents, estimates, correspondence, logs, electronic data and other evidence pertaining to the costs incurred by the Contractor in connection with or related to the Contract ("records") to such extent and in such detail as will property reflect and fully support compliance with requirements of the Contract Documents and with all costs, charges and other amounts of whatever nature under the contract. The Contractor shall preserve such records for a period of three (3) years following the date of Final Acceptance under the contract and for such longer period as may be required by any other provision of the contract. Within seven (7) days of the Owner's requires, the Contractor agrees to make available at the office of the Contractor during normal business hours all records for inspection, audit and reproduction by the Owner or its representatives. These requirements shall be applicable to each Subcontractor of any tier and included in each Subcontract and purchase order issued

with respect to the Work, except fixed-price Subcontracts where the price is $25,000 or less.

ARTICLE 10 PROTECTION OF PERSONS AND PROPERTY

10.1 SAFETY PRECAUTIONS AND PROGRAMS

10.1.1 The Contractor shall use best efforts and shall be responsible for initiating, maintaining and supervising all safety precautions and programs in connection with the performance of the Contract.

10.2 SAFETY OF PERSONS AND PROPERTY

10.2.1 The Contractor shall use best efforts to take precautions for safety of, and provide protection to prevent damage, injury or loss to:

.1 employees on the Work and other persons who may be affected thereby;

.2 the Work and materials and equipment to be incorporated therein, whether in storage on or off the site, under care, custody or control of the Contractor or the Contractor's Subcontractors or Sub-subcontractors; and

.3 other property at the site or adjacent thereto, such as trees, shrubs, lawns, walks, pavements, roadways, structures and utilities not designated for removal, relocation or replacement in the course of construction.

10.2.2 The Contractor shall give notices and comply with applicable laws, ordinances, rules, regulations and lawful orders of public authorities bearing on safety of persons or property or their protection from damage, injury or loss.

10.2.3 The Contractor shall use best efforts to erect and maintain, as required by existing conditions and performance of the Contract, safeguards for safety and protection, including posting danger signs and other warnings against hazards, promulgating safety regulations and notifying owners and users of adjacent sites and utilities and to protect adjacent property and improvements from any damage. Any damage to such property or improvements shall be promptly remedied at Contractor’s sole cost and expense.

10.2.4 When use or storage of explosives or other hazardous materials or equipment or unusual methods are necessary for execution of the Work, the Contractor shall exercise utmost care and carry on such activities under supervision of properly qualified personnel and notify the Owner and Consultant in advance to such storage. To the extent that Owner's Operations limit the use or storage of explosives or other hazardous materials or equipment they shall not be used or stored at the Project.

10.2.5 The Contractor shall promptly remedy damage and loss (other than damage or loss insured under property insurance required by the Contract Documents) to property referred to in Clauses 10.2.1.2 and 10.2.1.3 caused in whole or in part by the Contractor, any Subcontractors, a Sub-subcontractor, or anyone directly or indirectly employed by any of them, or by anyone for whose acts they may be liable and for which the Contractor is responsible under Clauses 10.2.1.2 and 10.2.1.3, except damage or loss attributable to acts or omissions of the Owner or Consultant or anyone directly or indirectly employed by either of them, or by anyone for whose acts either of them may be liable, and not attributable to the fault or negligence of the Contractor. The foregoing obligations of the Contractor are in addition to the Contractor's obligations under Paragraph 3.18.

10.2.6 The Contractor shall designate a responsible member of the Contractor's organization at the site whose duty shall be the prevention of accidents. This person shall be the Contractor's superintendent unless otherwise designated by the Contractor in writing to the Owner and Consultant.

10.2.7 The Contractor shall not load or permit any part of the construction or site to be loaded so as to endanger its safety.

10.2.8 Contractor shall specifically comply with any and all laws, rules and regulations related to hazardous materials (including without limitation asbestos) and hazardous material abatement including by not limited to those relating to contracting and the performance of such work.

10.3 HAZARDOUS MATERIALS

10.3.1 If reasonable precautions will be inadequate to prevent foreseeable bodily injury or death to persons resulting from a material or substance, including but not limited to asbestos, encountered on the site by the Contractor, the Contractor shall, upon recognizing the condition, immediately stop Work in the affected area and promptly report the condition to the Owner and Consultant in writing. By executing this Contract, Contactor represents and warrants that it has no knowledge of any material or substance which would give rise to any obligation of the Owner under any provision of 10.3.

10.3.2 The Owner shall obtain the services of a licensed laboratory to verify the presence or absence of the material or substance reported by the Contractor and, in the event such material or substance is found to be present, to verify that it has been rendered harmless. Unless otherwise required by the Contract Documents, the Owner shall furnish in writing to the Contractor and Consultant the names and qualifications of persons or entities who are to perform tests verifying the presence or absence of such material or substance or who are to perform the task of removal or safe containment of such material or substance. The Contractor and the Consultant will promptly reply to the Owner in writing stating whether or not either has reasonable objection to the persons or entities proposed by the Owner. If either the Contractor or Consultant has an objection to a person or entity proposed by the Owner, the Owner shall propose another to whom the Contractor and the Consultant have no reasonable objection. When the material or substance has been rendered harmless, Work in the affected area shall resume upon written agreement of the Owner and Contractor. The Contract Time shall be extended appropriately and the Contract Sum shall be increased in the amount of the Contractor's reasonable additional costs of shut-down, delay and start-up, which adjustments shall be accomplished as provided in Article 7.

10.4 The Owner shall not be responsible under Paragraph 10.3 for materials and substances brought to the site by the Contractor.

10.5 EMERGENCIES

10.5.1 In an emergency affecting safety of persons or property, the Contractor shall act, at the Contractors discretion, to prevent threatened damage, injury or loss. Additional compensation or extension of time claimed by the Contractor on account of an emergency shall be determined as provided in Paragraph 4.3.

ARTICLE 11 INSURANCE AND BONDS

11.1 CONTRACTOR'S LIABILITY INSURANCE

11.1.1 The Contractor shall purchase from and maintain in a company or companies lawfully authorized to do business in the jurisdiction in which the Project is located such insurance as will protect the Contractor from claims set forth below which may arise out of or result from the Contractor's operations under the

Contract and for which the Contractor may be legally liable, whether such operations be by the Contractor or by any Subcontractors, or by anyone directly or indirectly employed by any of them, or by anyone for whose acts any of them may be liable:

.1 claims under workers' compensation, disability benefit and other similar employee benefit acts which are applicable to the Work to be performed;

.2 claims for damages because of bodily injury, occupational sickness or disease, or death of the Contractor's employees;

.3 claims for damages because of bodily injury, sickness or disease, or death of any person other than the Contractor's employees;

.4 claims for damages insured by usual personal injury liability coverage;

.5 claims for damages, other than to the Work itself, because of injury to or destruction of tangible property, including loss of use resulting therefrom;

.6 claims for damages because of bodily injury, death of a person or property damage arising out of ownership, maintenance or use of a motor vehicle;

.7 claims for bodily injury or property damage arising out of completed operations; and

.8 claims involving contractual liability insurance applicable to the Contractor's obligations under Paragraph 3.18.

11.1.2 The insurance required by Subparagraph 11.1.1 shall be written for not less than limits of liability specified in the Contract Documents or required by law, whichever coverage is greater. Coverage's, whether written on an occurrence or claims-made basis, shall be maintained without interruption from date of commencement of the Work until date of final payment and termination of any coverage required to be maintained after final payment.

11.1.3 Certificates of insurance acceptable to the Owner shall be filed with the Owner prior to commencement of the Work. These certificates and the insurance policies required by this Paragraph 11.1 shall contain a provision that coverages afforded under the policies will not be canceled or allowed to expire until at least 30 days' prior written notice has been given to the Owner. If any of the foregoing insurance coverages are required to remain in force after final payment and are reasonably available, an additional certificate evidencing continuation of such coverage shall be submitted with the final Application for Payment as required by Subparagraph 9.10.2. Information concerning reduction of coverage on account of revised limits or claims paid under the General Aggregate, or both, shall be furnished by the Contractor with reasonable promptness in accordance with the Contractor's information and belief.

11.2 PROJECT MANAGEMENT PROTECTIVE LIABILITY INSURANCE

11.2.1 The Owner may also in addition to or in the alternative require the Contractor to purchase and maintain Project Management Protective Liability insurance from the Contractor's usual sources as primary coverage for the Owner's, Contractor's and Consultant's vicarious liability for construction operations under the Contract. Unless otherwise required by the Contract Documents, the Owner shall reimburse the Contractor by increasing the Contract Sum to pay the cost of purchasing and maintaining such optional insurance coverage and the Contractor shall not be responsible for purchasing any other liability insurance

on behalf of the Owner. The minimum limits of liability purchased with such coverage shall be equal to the aggregate of the limits required for Contractor's Liability Insurance under Clauses 11.1.1.2 through 11.1.1.5.

11.2.2 To the extent damages are covered by Project Management Protective Liability insurance, the Owner, Contractor and Consultant waive all rights against each other for damages, except such rights as they may have to the proceeds of such insurance. The policy shall provide for such waivers of subrogation by endorsement or otherwise.

11.2.3 The Owner may require the Contractor to include the Owner, Owners Representative, Consultant or any other persons or entities as additional insureds on the Contractor's Liability Insurance coverage under Paragraph 11.1 or as set out elsewhere in the Contract Documents.

11.3 PROPERTY INSURANCE

11.3.1 Unless otherwise provided, the Owner shall purchase and maintain, in a company or companies lawfully authorized to do business in the jurisdiction in which the Project is located, property insurance written on a builder's risk "all-risk" or equivalent policy form in the amount of the initial Contract Sum, plus value of subsequent Contract modifications and cost of materials supplied or installed by others, comprising total value for the entire Project at the site on a replacement cost basis without optional deductibles. Such property insurance shall be maintained, until final payment has been made as provided in Paragraph 9.10 or until no person or entity other than the Owner has an insurable interest in the property required by this Paragraph 11.3 to be covered, whichever is later. This insurance shall include interests of the Owner, the Contractor, Subcontractors and Sub-subcontractors in the Project.

11.3.1.1 Property insurance may be on an "all-risk" or equivalent policy form and shall include, without limitation, insurance against the perils of fire (with extended coverage) and physical loss or damage including, without duplication of coverage, theft, vandalism, malicious mischief, collapse, earthquake, flood, windstorm, false work, testing and startup, temporary buildings and debris removal including demolition occasioned by enforcement of any applicable legal requirements, and may cover reasonable compensation for Consultant's and Contractor's services and expenses required as a result of such insured loss.

11.3.1.2 If the Owner does not intend to purchase such insurance the Owner shall so inform the Contractor. The Contractor may, then following 14 days prior written notice to the Owner by the Contractor effect such insurance which will protect the interests of the Owner, Contractor, Subcontractors and Sub-subcontractors in the Work, and if approved by the Owner in its discretion and in writing before the purchase thereof the costs thereof may be charged to the Owner.

11.3.1.3 If the property insurance requires deductibles, the Owner need not pay costs not covered because of such deductibles and they shall be paid by Contractor.

11.3.1.4 This property insurance, if any may at the Owner's option cover portions of the Work stored off the site, and also portions of the Work in transit.

11.3.1.5 Partial occupancy or use in accordance with Paragraph 9.9 may commence absent the insurance company or companies providing property insurance having consented to such partial occupancy or use by endorsement or otherwise.

11.3.2 Loss of Use Insurance. The Owner, at the Owner's option, may purchase and maintain such insurance as will insure the Owner against loss of use of the Owner's property due to fire or other hazards, however caused.

11.3.3 If during the Project construction period the Owner insures properties, real or personal or both, at or adjacent to the site by property insurance under policies separate from those insuring the Project, or if after final payment property insurance is to be provided on the completed Project through a policy or policies other than those insuring the Project during the construction period, the Owner shall waive all rights in accordance with the terms of Subparagraph 11.3.5 for damages caused by fire or other causes of loss covered by this separate property insurance. All separate policies shall provide this waiver of subrogation by endorsement or otherwise.

11.3.4 Before an exposure to loss may occur, the Owner shall file with the Contractor a copy of each policy that includes insurance coverage's required by this Paragraph 11.3. Each policy shall contain all generally applicable conditions, definitions, exclusions and endorsements related to this Project. Each policy shall contain a provision that the policy will not be canceled or allowed to expire, and that its limits will not be reduced, until at least 30 days' prior written notice has been given to the Contractor.

11.3.5 Waivers of Subrogation. The Owner and Contractor waive all rights against (1) each other and any of their subcontractors, sub-subcontractors, agents and employees, each of the other, and (2) the Consultant, Consultant's consultants, separate contractors described in Article 6, if any, and any of their subcontractors, sub-subcontractors, agents and employees, for damages caused by fire or other causes of loss to the extent covered by property insurance obtained pursuant to this Paragraph 11.3 or other property insurance applicable to the Work, except such rights as they have to proceeds of such insurance held by the Owner as fiduciary. The Owner or Contractor, as appropriate, shall require of the Consultant, Consultant's consultants, separate contractors described in Article 6, if any, and the subcontractors, sub-subcontractors, agents and employees of any of them, by appropriate agreements, written where legally required for validity, similar waivers each in favor of other parties enumerated herein. The policies shall provide such waivers of subrogation by endorsement or otherwise. A waiver of subrogation shall be effective as to a person or entity even though that person or entity would otherwise have a duty of indemnification, contractual or otherwise, did not pay the insurance premium directly or indirectly, and whether or not the person or entity had an insurable interest in the property damaged.

11.3.6 A loss insured under Owner's property insurance shall be adjusted by the Owner as fiduciary and made payable to the Owner as fiduciary for the insureds, as their interests may appear, subject to requirements of any applicable mortgagee clause and of Subparagraph 11.3.7. The Contractor shall pay Subcontractors their just shares of insurance proceeds received by the Contractor, and by appropriate agreements, written where legally required for validity, shall require Subcontractors to make payments to their Sub-subcontractors in similar manner.

11.3.7 The Owner as fiduciary shall have power to adjust and settle a loss with insurers unless one of the parties in interest shall object in writing within five days after occurrence of loss to the Owner's exercise of this power; if such objection is made, the dispute shall be resolved as provided in Paragraphs 4.5 and 4.6. The Owner as fiduciary shall, in the case of arbitration, make settlement with insurers in accordance with directions of the arbitrators. If distribution of insurance proceeds by arbitration is required, the arbitrators will direct such distribution.

11.4 PERFORMANCE BOND AND PAYMENT BOND

11.4.1 The Owner shall have the right to require the Contractor to furnish bonds covering faithful performance of the Contract and payment of obligations arising thereunder as stipulated in bidding requirements or specifically required in any of the Contract Documents.

11.4.2 Upon the request of any person or entity appearing to be a potential beneficiary of bonds covering payment of obligations arising under the Contract, the Contractor shall promptly furnish a copy of the bonds

or shall permit a copy to be made.

ARTICLE 12 UNCOVERING AND CORRECTION OF WORK

12.1 UNCOVERING OF WORK

12.1.1 If a portion of the Work is covered contrary to the Consultant's or Owner's request or to requirements specifically expressed in the Contract Documents, it must, if required in writing by the Consultant or Owner, be uncovered for the Consultant's or Owner's observation or examination and be replaced at the Contractor's expense without change in the Contract Time.

12.1.2 If a portion of the Work has been covered which the Consultant or Owner has not specifically requested to examine prior to its being covered, the Consultant or Owner may request to see such Work and it shall be uncovered by the Contractor. If such Work is in full and strict accordance with the Contract Documents, costs of uncovering and replacement shall, by appropriate Change Order, be at the Owner's expense. If such Work is not in full and strict accordance with the Contract Documents, correction shall be at the Contractor's sole expense unless the condition was caused by the Owner or a separate contractor in which event the Owner shall be responsible for payment of such costs.

12.2 CORRECTION OF WORK

12.2.1 BEFORE OR AFTER SUBSTANTIAL COMPLETION

12.2.1.1 The Contractor shall promptly correct Work rejected by the Consultant or failing to conform to the requirements of the Contract Documents, whether discovered before or after Substantial Completion and whether or not fabricated, installed or completed. Costs of correcting such rejected Work, including additional testing and inspections and compensation for the Consultant's services and expenses made necessary thereby, shall be at the Contractor's expense. If prior to Substantial Completion the contractor or any Subcontractors or anyone they are responsible for uses or damages any portion of the Work, they shall return it to “like new” condition without any increase in the Contract Time or Sum.

12.2.2 AFTER SUBSTANTIAL COMPLETION

12.2.2.1 In addition to the Contractor's obligations under Paragraph 3.5, if, within one year after the date of Substantial Completion of the Work or designated portion thereof or after the date for commencement of warranties established under Subparagraph 9.9.1, or by terms of an applicable special warranty required by the Contract Documents, any of the Work is found to be not in accordance with the requirements of the Contract Documents, the Contractor shall correct it promptly (but in no event later than seven days) after receipt of written notice from the Owner to do so unless the Owner has previously given the Contractor a full and final written acceptance of such condition. The Owner shall give such notice promptly after discovery of the condition. During the one-year period for correction of Work, if the Owner fails to notify the Contractor and give the Contractor an opportunity to make the correction, the Owner waives the rights to require correction by the Contractor and to make a claim for breach of warranty. If the Contractor fails to correct nonconforming Work promptly during that period after receipt of notice from the Owner or Consultant, the Owner may correct it in accordance with Paragraph 2.4.

12.2.2.2 The one-year period for correction of Work shall be extended with respect to portions of Work first performed after Substantial Completion by the period of time between Substantial Completion and the actual performance of the Work.

12.2.2.3 The one-year period for correction of Work shall be extended by corrective Work performed by the Contractor pursuant to this Paragraph 12.2.

12.2.3 The Contractor shall remove from the site portions of the Work which are not in accordance with the requirements of the Contract Documents and are neither corrected by the Contractor nor accepted by the Owner.

12.2.4 The Contractor shall bear the sole cost of correcting destroyed or damaged construction, whether completed or partially completed, of the Owner or separate contractors caused by the Contractor's correction or removal of Work which is not in accordance with the requirements of the Contract Documents.

12.2.5 Nothing contained in this Paragraph 12.2 shall be construed to establish a period of limitation with respect to other obligations which the Contractor might have under the Contract Documents. Establishment of the one-year period for correction of Work as described in Subparagraph 12.2.2 relates only to the specific obligation of the Contractor to correct the Work, and has no relationship to the time within which the obligation to comply with the Contract Documents may be sought to be enforced, nor to the time within which proceedings may be commenced to establish the Contractor's liability with respect to the Contractor's obligations other than specifically to correct the Work.

12.3 ACCEPTANCE OF NONCONFORMING WORK

12.3.1 If the Owner prefers to accept Work which is not in accordance with the requirements of the Contract Documents, the Owner may do so instead of requiring its removal and correction, in which case the Contract Sum will be reduced as appropriate and equitable. Such adjustment shall be effected whether or not final payment has been made.

ARTICLE 13 MISCELLANEOUS PROVISIONS

13.1 GOVERNING LAW

13.1.1 The Contract shall be governed by the law of the State of Oregon.

13.2 SUCCESSORS AND ASSIGNS

13.2.1 The Owner and Contractor respectively bind themselves, their partners, successors, assigns and legal representatives to the other party hereto and to partners, successors, assigns and legal representatives of such other party in respect to covenants, agreements and obligations contained in the Contract Documents.

13.2.2 The Owner may, without consent of the Contractor, assign the Contract to any person or entity. In such event, they shall assume the Owner's rights and obligations under the Contract Documents. The Contractor shall execute all consents reasonably required to facilitate such assignment.

13.3 WRITTEN NOTICE

13.3.1 Written notice shall be deemed to have been duly served if delivered in person to the individual or a member of the firm or entity or to an officer of the corporation for which it was intended, or if delivered at or sent by registered or certified mail to the last business address known to the party giving notice. Notice by e-mail or facsimile shall not constitute written notice unless the Owner shall otherwise agree.

13.4 RIGHTS AND REMEDIES

13.4.1 Duties and obligations imposed by the Contract Documents and rights and remedies available thereunder shall be in addition to and not a limitation of duties, obligations, rights and remedies otherwise imposed or available by law.

13.4.2 No action or failure to act by the Owner, Consultant or Contractor shall constitute a waiver of a right or duty afforded them under the Contract, nor shall such action or failure to act constitute approval of or acquiescence in a breach thereunder, except as may be specifically agreed in writing.

13.5 TESTS AND INSPECTIONS

13.5.1 Tests, inspections and approvals of portions of the Work required by the Contract Documents or by laws, ordinances, rules, regulations or orders of public authorities having jurisdiction shall be made at an appropriate time. Unless otherwise provided, the Contractor shall timely make all arrangements for such tests, inspections and approvals with an independent testing laboratory or entity acceptable to the Owner, or with the appropriate public authority, and shall bear all related costs of tests, inspections and approvals. Except as otherwise provided herein, the cost of private-independent tests by third-parties to this Agreement shall be at Owner's expense. The Contractor shall give the Consultant and Owner timely notice of when and where tests and inspections are to be made so that the Consultant and Owner may be present for such procedures. The Owner shall bear costs of tests, inspections or approvals which do not become requirements until after bids are received or negotiations concluded.

13.5.2 If the Consultant, Owner or public authorities having jurisdiction determine that portions of the Work require additional testing, inspection or approval not included under Subparagraph 13.5.1, the Consultant may, upon written authorization from the Owner, instruct the Contractor to make arrangements for such additional testing, inspection or approval by an entity acceptable to the Owner, and the Contractor shall give timely notice to the Consultant and Owner of when and where tests and inspections are to be made so that the Consultant and Owner may be present for such procedures. Such costs, except as provided in Subparagraph 13.5.3, or otherwise in the Contract Documents shall be at the Owner's expense.

13.5.3 If such procedures for testing, inspection or approval under Subparagraphs 13.5.1 and 13.5.2 reveal failure of the portions of the Work to comply with requirements established by the Contract Documents, all costs made necessary by such failure including those of repeated procedures and compensation for the Consultant's and Owner's services and expenses shall be at the Contractor's sole cost and expense.

13.5.4 Required certificates of testing, inspection or approval shall, unless otherwise required by the Contract Documents, be secured by the Contractor and promptly delivered to the Consultant.

13.5.5 If the Consultant is to observe tests, inspections or approvals required by the Contract Documents, the Consultant will do so reasonably and, where practicable, at the normal place of testing.

13.5.6 Tests or inspections conducted pursuant to the Contract Documents shall be made promptly to avoid unreasonable delay in the Work.

13.6 INTEREST

13.6.1 Payments due and unpaid under the Contract Documents shall bear interest from the date payment is due at such rate as the parties may agree upon in writing or, in the absence thereof, at the legal rate prevailing from time to time at the place where the Project is located.

13.7 COMMENCEMENT OF STATUTORY LIMITATION PERIOD

13.7.1 As between the Owner and Contractor any applicable statute of limitations shall accrue as provided by law in all events before substantial completion, between substantial completion and final certificate for payment, after final certificate for payment and otherwise.

ARTICLE 14 TERMINATION OR SUSPENSION OF THE CONTRACT

14.1 TERMINATION BY THE CONTRACTOR

14.1.1 The Contractor may terminate the Contract if the Work is stopped for a period of 30 consecutive days through no act or fault of the Contractor or any Subcontractors, Sub-subcontractor or their agents or employees or any other persons or entities performing portions of the Work under direct or indirect contract with the Contractor, for any of the following reasons:

.1 issuance of an order of a court or other public authority having jurisdiction which requires all Work to be stopped:

.2 an act of government, such as a declaration of national emergency which requires all Work to be stopped; or

.3 because the Consultant has not issued a Certificate for Payment and has not notified the Contractor of the reason for withholding certification as provided in Subparagraph 9.4.1, or because the Owner has not made payment on a Certificate for Payment within the time stated in the Contract Documents following 30 prior written notice to the Owner.

14.1.2 If one of the reasons described in Subparagraph 14.1.1 exists, the Contractor may, upon seven days' written notice to the Owner and Consultant, terminate the Contract and recover from the Owner payment for Work executed and for proven loss with respect to materials, equipment, tools, and construction equipment and machinery, including agreed reasonable overhead and profit.

14.2 TERMINATION BY THE OWNER FOR CAUSE

14.2.1 The Owner may terminate the Contract if the Contractor:

.1 persistently or repeatedly refuses or fails to supply enough properly skilled workers or proper materials;

.2 fails to make payment to Subcontractors for materials or labor in accordance with the respective agreements between the Contractor and the Subcontractors;

.3 persistently disregards laws, ordinances, or rules, regulations or orders of a public authority having jurisdiction; or

.4 otherwise is guilty of substantial breach of a provision of the Contract Documents.

14.2.2 When any of the above reasons exist, the Owner, upon certification by the Consultant that sufficient cause exists to justify such action, may without prejudice to any other rights or remedies of the Owner and after giving the Contractor and the Contractor's surety, if any, seven days' written notice, terminate employment of the Contractor and may, subject to any prior rights of the surety:

.1 take possession of the site and of all materials, equipment, tools, and construction equipment and machinery thereon owned by the Contractor (but not the construction equipment owned, operated and used by Subcontractors in the performance of their Work);

.2 accept assignment of subcontracts pursuant to Paragraph 5.4; and

.3 finish the Work by whatever reasonable method the Owner may deem expedient. Upon request of the Contractor, the Owner shall furnish to the Contractor a detailed accounting of the costs incurred by the Owner in finishing the Work.

14.2.3 When the Owner terminates the Contract for one of the reasons stated in Subparagraph 14.2.1, the Contractor shall not be entitled to receive further payment until the Work is finished.

14.2.4 If the unpaid balance of the Contract Sum exceeds costs of finishing the Work, including compensation for the Consultant's services and expenses made necessary thereby, and other damages incurred by the Owner and not expressly waived, such excess shall be paid to the Contractor. If such costs and damages exceed the unpaid balance, the Contractor shall pay the difference to the Owner. The amount to be paid to the Contractor or Owner, as the case may be, shall be certified by the Consultant, upon application, and this obligation for payment shall survive termination of the Contract. Contractor hereby fully, finally and unconditionally waives any and all other claims, including but not limited to those for lost or anticipated profits or overhead.

14.3 SUSPENSION BY THE OWNER FOR CONVENIENCE

14.3.1 The Owner may, without cause, order the Contractor in writing to suspend, delay or interrupt the Work in whole or in part for such period of time as the Owner may determine.

14.3.2 The Contract Sum and Contract Time shall be adjusted for increases in the cost and time caused by suspension, delay or interruption as described in Subparagraph 14.3.1. Adjustment of the Contract Sum shall include profit. No adjustment shall be made to the extent:

.1 that performance is, was or would have been so suspended, delayed or interrupted by another cause for which the Contractor is responsible; or

.2 that an equitable adjustment is made or denied under another provision of the Contract.

14.4 TERMINATION BY THE OWNER FOR CONVENIENCE

14.4.1 The Owner may, at any time, terminate the Contract for the Owner's convenience and without cause.

14.4.2 Upon receipt of written notice from the Owner of such termination for the Owner's convenience, the Contractor shall:

.1 cease operations as directed by the Owner in the notice;

.2 take actions necessary, or that the Owner may direct, for the protection and preservation of the Work; and

.3 except for Work directed to be performed prior to the effective date of termination stated in the notice, terminate all existing subcontracts and purchase orders and enter into no further subcontracts and purchase orders.

14.4.3 In case of such termination for the Owner's convenience, the Contractor shall be entitled to receive payment for Work executed, and costs incurred by reason of such termination as provided in 14.4.4,

14.4.4. Upon on such termination Contractor shall recover as its sole remedy payment for Work properly and timely performed and installed prior to the effective date of the termination and for items properly and timely fabricated off the site and delivered and stored in accordance with the Owner's instructions prior to the effective date of termination. Contractor hereby fully, finally and unconditionally waives any and all other claims, including but not limited to those for lost or anticipated profits, or overhead. Owner shall be credited for payments previously made and claims the Owner has.

END SECTION

PAYMENT BOND

Bond No. _____

Project Name: Willow Wind Renovation

_____(Surety #1)

Bond Amount No. 1: $ _____

_____(Surety #2)*

Bond Amount No. 2*: $ _____
* *If using multiple sureties*

Total Penal Sum of Bond: $ _____

We, _____, as Principal, and the above identified Surety(ies), authorized to transact surety business in Oregon, as Surety, hereby jointly and severally bind ourselves, our respective heirs, executors, administrators, successors and assigns firmly by these presents to pay unto Jackson County School District 5 the sum of (Total Penal Sum of Bond) _____
(Provided, that we the Sureties bind ourselves in such sum "jointly and severally" as well as "severally" only for the purpose of allowing a joint action or actions against any or all of us, and for all other purposes each Surety binds itself, jointly and severally with the Principal, for the payment of such sum only as is set forth opposite the name of such Surety), and

WHEREAS, the Principal has entered into a contract with Ashland School District, the plans, specifications, terms and conditions of which are contained in above-referenced Solicitation.

WHEREAS, the terms and conditions of the contract, together with applicable plans, standard specifications, special provisions, schedule of performance, and schedule of contract prices, are made a part of this Payment Bond by reference, whether or not attached to the contract (all hereafter called "Contract"); and

WHEREAS, the Principal has agreed to perform the Contract in accordance with the terms, conditions, requirements, plans and specifications, and schedule of contract prices which are set forth in the Contract and any attachments, and all authorized modifications of the Contract which increase the amount of the work, or the cost of the Contract, or constitute authorized extensions of time for performance of the Contract, notice of any such modifications hereby being waived by the Surety:

NOW, THEREFORE, THE CONDITION OF THIS BOND IS SUCH that if the Principal shall faithfully and truly observe and comply with the terms, conditions and provisions of the Contract, in all respects, and shall well and truly and fully do and perform all matters and things by it undertaken to be performed under said Contract and any duly authorized modifications that are made, upon the terms set forth therein, and within the time prescribed therein, or as extended therein as provided in the Contract, with or without notice to the Sureties, and shall indemnify and save harmless Ashland School District, and members thereof, its officers, employees and agents, against any claim for direct or indirect damages of every kind and description that shall be

suffered or claimed to be suffered in connection with or arising out of the performance of the Contract by the Contractor or its subcontractors, and shall promptly pay all persons supplying labor, materials or both to the Principal or its subcontractors for prosecution of the work provided in the Contract; and shall promptly pay all contributions due the State Industrial Accident Fund and the State Unemployment Compensation Fund from the Principal or its subcontractors in connection with the performance of the Contract; and shall pay over to the Oregon Department of Revenue all sums required to be deducted and retained from the wages of employees of the Principal and its subcontractors pursuant to ORS 279C.600, and shall permit no lien nor claim to be filed or prosecuted against Ashland School Districts on account of any labor or materials furnished; and shall do all things required of the Principal by the laws of this State, then this obligation shall be void; otherwise, it shall remain in full force and effect.

Nonpayment of the bond premium will not invalidate this bond nor shall Ashland School District, or the above-referenced, be obligated for the payment of any premiums.

This bond is given and received under authority of ORS Chapter 279C, the provisions of which hereby are incorporated into this bond and made a part hereof.

IN WITNESS WHEREOF, WE HAVE CAUSED THIS INSTRUMENT TO BE EXECUTED AND SEALED BY OUR DULY AUTHORIZED LEGAL REPRESENTATIVES:

Dated this _____day of _____, 2021.

PRINCIPAL: _____

By _____
Signature

_____
Official Capacity

Attest: _____
Corporation Secretary

SURETY: _____
[Add signatures for each if using multiple bonds]

BY ATTORNEY-IN-FACT:
[Power-of-Attorney must accompany each bond]

_____
Name

_____
Signature

_____
Address

_____
City State Zip

_____
Phone Fax

PERFORMANCE BOND

Bond No. _____

Project Name: Willow Wind Renovation

_____(Surety #1)

Bond Amount No. 1: $ _____

_____(Surety #2)*

Bond Amount No. 2*: $ _____
* *If using multiple sureties*

Total Penal Sum of Bond: $ _____

We, _____, as Principal, and the above identified Surety(ies), authorized to transact surety business in Oregon, as Surety, hereby jointly and severally bind ourselves, our respective heirs, executors, administrators, successors and assigns firmly by these presents to pay unto Jackson County School District 5 the sum of (Total Penal Sum of Bond) _____
(Provided, that we the Sureties bind ourselves in such sum "jointly and severally" as well as "severally" only for the purpose of allowing a joint action or actions against any or all of us, and for all other purposes each Surety binds itself, jointly and severally with the Principal, for the payment of such sum only as is set forth opposite the name of such Surety), and

WHEREAS, the Principal has entered into a contract with Ashland School District, the plans, specifications, terms and conditions of which are contained in above-referenced Solicitation.

WHEREAS, the terms and conditions of the contract, together with applicable plans, standard specifications, special provisions, schedule of performance, and schedule of contract prices, are made a part of this Payment Bond by reference, whether or not attached to the contract (all hereafter called "Contract"); and

WHEREAS, the Principal has agreed to perform the Contract in accordance with the terms, conditions, requirements, plans and specifications, and schedule of contract prices which are set forth in the Contract and any attachments, and all authorized modifications of the Contract which increase the amount of the work, or the cost of the Contract, or constitute authorized extensions of time for performance of the Contract, notice of any such modifications hereby being waived by the Surety:

NOW, THEREFORE, THE CONDITION OF THIS BOND IS SUCH that if the Principal shall faithfully and truly observe and comply with the terms, conditions and provisions of the Contract, in all respects, and shall well and truly and fully do and perform all matters and things by it undertaken to be performed under said Contract and any duly authorized modifications that are made, upon the terms set forth therein, and within the time prescribed therein, or as extended therein as provided in the Contract, with or without notice to the Sureties, and shall indemnify and save harmless Ashland School District, and members thereof, its officers, employees and agents, against any claim for direct or indirect damages of every kind and description that shall be

suffered or claimed to be suffered in connection with or arising out of the performance of the Contract by the Contractor or its subcontractors, and shall promptly pay all persons supplying labor, materials or both to the Principal or its subcontractors for prosecution of the work provided in the Contract; and shall promptly pay all contributions due the State Industrial Accident Fund and the State Unemployment Compensation Fund from the Principal or its subcontractors in connection with the performance of the Contract; and shall pay over to the Oregon Department of Revenue all sums required to be deducted and retained from the wages of employees of the Principal and its subcontractors pursuant to ORS 279C.600, and shall permit no lien nor claim to be filed or prosecuted against Ashland School District on account of any labor or materials furnished; and shall do all things required of the Principal by the laws of this State, then this obligation shall be void; otherwise, it shall remain in full force and effect.

Nonpayment of the bond premium will not invalidate this bond nor shall Ashland School District, or the above-referenced, be obligated for the payment of any premiums.

This bond is given and received under authority of ORS Chapter 279C, the provisions of which hereby are incorporated into this bond and made a part hereof.

IN WITNESS WHEREOF, WE HAVE CAUSED THIS INSTRUMENT TO BE EXECUTED AND SEALED BY OUR DULY AUTHORIZED LEGAL REPRESENTATIVES:

Dated this _____day of _____, 2021.

PRINCIPAL: _____

By _____
Signature

_____
Official Capacity

Attest: _____
Corporation Secretary

SURETY: _____
[Add signatures for each if using multiple bonds]

BY ATTORNEY-IN-FACT:
[Power-of-Attorney must accompany each bond]

_____
Name

_____
Signature

_____
Address

_____
City State Zip

_____
Phone Fax

PART 1 GENERAL

1.01 MINIMUM WAGE RATES

A. The minimum wage rates to be paid all crafts and labor on this contract shall be the prevailing wage for the individual crafts involved in the Jackson County area during the life of the contract and as determined by the Commissioner of the Oregon Bureau of Labor and Industries, or in the case of a Federal-Aid project, the wage determination decision of the Federal Secretary of Labor, along with conformance to ORS 279C, as may be applicable to the supplying of the services and/or materials called for in the bid.

B. Every contractor and subcontractor shall pay workers not less than the specified minimum hourly rate of wage for each trade or occupation in each locality. When a public works project is subject to Davis-Bacon Act (40 U.S.C. 3141 et seq) that would otherwise be subject to state prevailing wages, if the state prevailing rate of wage is higher than the federal prevailing rate of wage, the contractor and every subcontractor on the project shall pay at least the state prevailing rate of wage.

C. Each worker in each trade or occupation employed in the performance of the contract either by the contractor, subcontractor or other person doing or contracting to do or contracting for the whole or any part of the work on the contract, must be paid not less than the applicable state prevailing rate of wage in accordance with ORS 279C.383 and 279C.840, or the applicable federal prevailing rate of wage, whichever is higher.

1.02 GENERAL REQUIREMENTS

A. If a dispute arises as to what the prevailing wage rate for any class of worker is, and if the dispute cannot be settled by the parties involved, it may be referred to the Commission of the Bureau of Labor and Industries, State of Oregon, for final determination. The Wage Rates are minimum rates only and the Owner will not consider any claims or additional compensation because of payment made by Contractor or a Sub-Contractor of any wage rate in excess of the prevailing rate.

B. Prevailing Wage Rates:

1. Pursuant to ORS Ch. 279C.800 - 279C.870, "Prevailing Wage Rates for Public Works Contracts in Oregon," effective January 1, 2021, and Amendments, are bound hereinafter and are included as a part of this Specification.

C. Other requirements related to Prevailing Wage are listed in Section 00 5000 - Agreement.

PART 2 PRODUCTS - NOT USED

PART 3 EXECUTION - NOT USED

END OF SECTION

ARTICLE 11 - INSURANCE AND BONDS

Revise 11.1.2: Add the following:

The insurance required by 11.1.1 shall be written for not less than the following limits, or greater if required by law and underwritten by an insurance company rated A or A+ by A.M. Best & Co.

1. **Workers' Compensation:** Statutory

2. **Comprehensive General Liability** (**including Premises-Operations:** Independent Contractor's Protective; Products and Completed Operations; Explosion, Underground & Collapse; Broad-Form Property Damage, Blanket Contractual Liability, Personal Injury with Employment Exclusion Deleted):

   (a) Bodily Injury
   $2,000,000 Each Occurrence
   $4,000,000 Annual Aggregate

   (b) Property Damage
   $2,000,000 Each Occurrence
   $4,000,000 Annual Aggregate

   (c) Products and Completed Operations to be maintained for two (2) years after final payment.

   (d) Property Damage Liability Insurance shall provide X, C and U coverages.

3. **Comprehensive Automobile Liability:**

   (a) Bodily Injury
   $1,000,000 Each Person
   $1,000,000 Each Occurrence

   (b) Property Damage
   $1,000,000 Each Occurrence

4. The Owner shall be named as the Certificate Holder.

5. In addition, furnish true umbrella coverage, which provides excess limits over the primary layer and broader scope, in an amount not less than $2,000,000.

6. Insurance shall be written by a firm licensed to do business in the State of Oregon and as approved by the Owner. The Owner's specification or approval of this insurance or of its amount shall not relieve or decrease the liability of the Contractor under the Contract Documents or otherwise.

11.1.3: Add the following:

The Contractor shall furnish one copy of the General Liability and Automobile Liability policy. The policies shall name the Jackson County School District 5 and its members, partners, officers, directors, agents, and employees, and the successors in interest of the foregoing, as Certificate Holder, using ISO additional insureds endorsement CG 20 10 11 85 or a substitute providing equivalent coverages within ten (10) days after the Owner issues a "Notice of Intent to Award Contract". The Contractor shall furnish to the Owner copies of any subsequently issued endorsements amending, modifying, altering, or restricting coverage or limits.

END OF SECTION

PART 1 GENERAL

1.01 PROJECT

A. Project Name: Willow Wind Renovation

B. Owner's Name: Ashland School District

C. Architect's Name: arkitek:design&architecture, llc

D. The Project consists of HVAC replacement and plumbing design for restrooom remodels and a new restroom building for the existing Ashland School District Willow Wind Learning Center.

1.02 CONTRACT DESCRIPTION

1.03 WORK BY OWNER

A. Items noted OFOI (Owner-Furnished, Owner-Installed) will be supplied and installed by Owner before Substantial Completion. Some items include:

B. Items noted OFCI (Owner-Furnished, Contractor-Installed) will be supplied by the Owner for installation by Contractor before Substantial Completion. Some items include:

C. Items noted OFOICC (Owner Furnished, Owner Install, Contractor Coordinated) will be supplied by the Owner, installed by the Owner’s contractor, but the responsibility of the Contractor to coordinate installation before Substantial Completion.

1.04 OWNER OCCUPANCY

A. Owner intends to occupy the Project upon Substantial Completion

B. Cooperate with Owner to minimize conflict and to facilitate Owner's operations.

C. Schedule the Work to accommodate Owner occupancy.

1.05 CONTRACTOR USE OF SITE AND PREMISES

A. Except as otherwise stipulated herein, Contractors will have complete use of the Premises within the boundaries of the project as shown on the Drawings for the execution of the Work.

B. The possession, use, or distribution of illicit drugs and alcohol on the Owner's premises is prohibited. Prescription medications brought to the project site shall be in the original container bearing the name of the drug, the name of the physician and the prescribed dosage.

C. TOBACCO FREE INSTITUTION: All bidders shall comply with OAR 581.021.0110 and ORS 326.051 regarding Tobacco Use on District Building and Grounds. For the purpose of this rule “tobacco” is defined to include any lit or unlit cigarette, cigar, pipe, bidi, clove cigarette, vapor cigarette or E cigarette, and any other smoking product, and spit tobacco, also known as smokeless, dip, chew, and snuff, in any form. No employee, sub-contractor, material supplier, or project visitor is permitted to smoke, inhale, dip, or chew or sell tobacco at any time, <u>including non-business hours</u>.

D. Tools and building materials shall never be left out when an unsecured work area is vacated.

E. Ladders and scaffolding will be taken down when an unsecured work area is vacated.

F. Open holes and other tripping hazards shall be fenced or barricaded when an unsecured work area is vacated.

G. "Secured Work Area" is defined as an area having a perimeter cyclone fence at least 6 feet in height, with gates which close and lock so that no casual entrance is possible by unauthorized personnel.

H. Operations resulting in vapors, emissions or flying objects shall be conducted in such a way as to prevent exposure to any unprotected parties or property.

1.06 WORK SEQUENCE

1.07 DUST PROTECTION AND SAFETY BARRIERS

A. The Contractor shall erect temporary Dust and Safety Barriers around all of the Construction Operations to keep dust and debris within the localized work area, and to protect the owner, staff, and the public from construction activities. Additional requirements may be required if airborne dust is judged by the Owner to be a problem.

B. The Contractor shall take precautions to protect existing smoke detectors from damage or deterioration from dust caused by work of this contract.

1.08 OVERTIME WORK

A. The Contractor shall notify the Owner in writing, at least 48 hours in advance of any overtime work, including nights, weekends, and holidays. Do no overtime work without Owner's prior approval.

B. The Contractor shall reimburse the Architect and Owner for any expenses incurred by them because of Contractor's overtime work.

1.09 WORK IN PUBLIC RIGHT-OF-WAY

A. The Contractor shall obtain any required Permits, pay Permit Fees, arrange for inspections by Regulatory Agencies, and comply with governing Regulatory Agency requirements.

1.10 PROTECTING EXISTING UTILITIES

A. Original Building Drawings and Site Survey Drawings indicate approximate location of any known, concealed Utility Lines. Before starting work, Contractor shall determine exact location of any of these Lines that could be damaged by Contract Work.

B. Contractor shall assume that other unknown Utility Lines do exist, and Contractor shall proceed with caution when working in areas that could conceal unknown Utilities.

C. If such Utility Lines are encountered, immediately request disposition instructions from Architect.

D. If Utility Lines are damaged; remove, repair, or replace Lines as directed. Additional compensation and/or extension of time, if any, caused by removing, repairing, or replacing Lines will be determined in accordance with General Conditions.

1.11 PROTECTING EXISTING LANDSCAPING & TREES

A. Protect existing Trees, not designated for removal, against damage caused by work of this contract.

B. Provide necessary Fencing and Barricades. Erect prior to Work, and unless otherwise instructed, remove after Work completion.

C. Prohibit Earth stockpiling, Material storage, and Vehicle Parking and Traffic within Drip-line of Trees.

D. Prohibit dumping of Refuse, Chemicals, and other Materials and puddling or running Water which may injure Plant growth including Root systems.

E. Prohibit Foot and Vehicle Traffic which may compact Soil over Root Systems.

F. Prohibit any unnecessary cutting, breaking and skinning of Branches and Roots, and prohibit skinning and bruising of Bark. All tree pruning activities shall be conducted by a certified arborist.

G. Prohibit all cutting, breaking, and skinning of branches and roots, and skinning or bruising of bark of any trees within the street Right of Way. Consult with a certified arborist and the Authority havign jurisdiction prior to starting and construction activities that may threaten to damage street trees.

H. Prohibit Fires, High-heat and Smoke adjacent to Trees.

I. Repair or replace with plants of equal size, any material damaged by Construction Operations.

J. Where damaged Trees cannot realistically be repaired or replaced, pay Owner, as Liquidated Damage, value of Trees as determined by Council of Tree & Landscape Appraisers and as distributed by International Society of Arborculture. Copies can be obtained from Society at Box 71, Urbana, IL 61801.

1.12 PROTECTING EXISTING SUBGRADE

A. Contractor shall protect against damage, existing Subgrade and Earthwork provided under this Contract.

B. Where necessary to accomplish required protection, provide additional Temporary Fill or other approved Cover over Work to be protected.

1.13 PROTECT EXISTING STRUCTURES

A. Contractor shall protect against damage, existing building parts not scheduled for repair or remodel under this contract.

B. Where necessary to accomplish required protection, provide additional Temporary barricades, cushioning, or other approved Cover over material to be protected.

1.14 HAZARDOUS MATERIALS

A. Building Materials Containing Asbestos and Lead have been found in this building in the past. The Owner has previously removed or encapsulated most of the asbestos. By this notice, the Contractor and the Sub-contractors, and their workers, are asked to be aware of the possible presence of Asbestos Bearing Materials, lead and other hazardous materials and if found, or even suspected, to immediately stop work in the area, and notify the Architect and the Owners Project Mnager of the location and condition. A separate independent contract will be issued by the Owner to have the suspected material tested and if needed removed or encapsulated.

B. The Contractor and Sub-contractors, and their workers shall be extremely careful when working around any asbestos or encapsulated asbestos materials, and take any necessary precautions to avoid disturbing the asbestos or the encapsulation materials. If the asbestos or the encapsulation is disturbed, immediately stop work in the area, and notify the Engineer and the Owners Facility Manager of the location and condition.

1.15 CRIMINAL HISTORY CHECK / PHOTO ID

A. The names of all Contractor and all Subcontractor employees who will be on the job site for more than one day must be submitted to the District. These employees shall fill out a criminal history form provided by the District. Criminal history checks will be run through the Oregon State Police as provided for in ORS 326.603. The District shall bear the cost of processing such Criminal history checks.

1. Through the signature on the criminal history form, authorization is also given to HMKCO and its representative to investigate this information. Further, with this signature, consent is given to all governmental agencies, public or private companies and individuals to release information regarding the individual to the HMKCO and to their representative. The District shall bear the cost of processing such Criminal history checks.

B. In accordance with ORS 326.603(8) the District is required to terminate the employment or contract status of any individual who refuses to consent to a criminal history check of to be fingerprinted or falsely swears to the non-conviction of any crime.

C. In accordance with ORS 326.603(7)(a) no individual found to have been convicted of any crime listed in ORS 342.143 or of an attempt to commit one of the listed crimes shall be allowed to work on any District site.

1. It is vital that employees are instructed to accurately complete criminal history forms. Crimes listed in ORS 342.143 which automatically bar an individual from employment with or contracting with the District are primarily crimes of violence, crimes against children, and sex related crimes. However, falsely swearing that you have not been convicted of a crime obligates the District to terminate employment or contract status even if the crime is not listed in ORS 342.143.

D. All employees working on site shall wear a Name and Photo Identification Badge. The district shall provide all Photo ID badge. Badge shall state Ashland School District, name of the project, employee name, and company they represent.

PART 2 PRODUCTS - NOT USED

PART 3 EXECUTION - NOT USED

END OF SECTION

PART 1 GENERAL

1.01 SECTION INCLUDES

A. Procedures for preparation and submittal of applications for progress payments.

B. Documentation of changes in Contract Sum and Contract Time.

C. Change procedures.

D. Correlation of Contractor submittals based on changes.

E. Procedures for preparation and submittal of application for final payment.

F. Schedule of Values.

G. Payments for products stored off site.

1.02 RELATED REQUIREMENTS

A. Section 00 5000 - Agreement Form: Contract Sum, retainages, payment period, monetary values of unit prices.

B. Section 00 6000 - General Conditions and Document 00 8000 - Supplementary Conditions: Additional requirements for progress payments, final payment, changes in the Work.

C. Section 00 7343 - Prevailing Wage Rates.

1.03 SUBMITTALS

A. Submit a preliminary draft to the Consultant 3 weeks prior to the submittal for the first Application. The purpose preliminary draft is to confirm the level of detail required by the Design Team. The Contractor is to make adjusted requested by the Consultant. The level of detail may include values as separate lines (entities) for each Specification Section. The Consultant will not review any Application submitted until changes requested by the Consultant to the preliminary draft have been incorporated.

1.04 SCHEDULE OF VALUES

A. Form to be used: AIA G703 or equivalent.

B. Electronic media printout including equivalent information will be considered in lieu of standard form specified; submit draft to Consultant for approval.

C. Forms filled out by hand will not be accepted.

D. Submit Schedule of Values in duplicate within 15 days after date of Owner-Contractor Agreement.

1. The purpose of the preliminary draft is to confirm the level of detail required by the Design Team, and the Contractor is to make adjustments as requested. The Consultant will not review any Application submitted until changes requested by the Consultant to the preliminary draft have been incorporated.

E. Format: Utilize the Table of Contents of this Project Manual. Identify each line item with number and title of the specification Section. Identify the following.

1. Each major Work Item.

2. Each subcontracted Work Item. For each major Subcontract (i.e. mechanical, electrical and plumbing), list products and operations of that Subcontract as separate line items. List labor and materials seperately for each major subcontractor.

3. Any Products to be stored, for which separate payments will be requested.

F. Include separately from each line item, a direct proportional amount of Contractor's overhead and profit.

G. Revise schedule to list approved Change Orders, with each Application For Payment.

H. Round off values to nearest dollar.

I. Sum of values listed shall equal total Contract Sum.

J. Substantiating Data: When requested by Consultant, submit justifying Substantiating Data and Line Item Amounts in question.

1.05 APPLICATIONS FOR PROGRESS PAYMENTS

A. Payment Period: Monthly.

B. Form to be used: AIA G702 and G703.

C. Electronic media printout including equivalent information will be considered in lieu of standard form specified; submit sample to Consultant for approval.

D. Forms filled out by hand will not be accepted.

E. Execute certification by signature of authorized officer.

F. Use data from approved Schedule of Values. Provide dollar value in each column for each line item for portion of work performed and for stored products.

G. List each authorized Change Order as a separate line item, listing Change Order number and dollar amount as for an original item of Work. Include individual line items for change orders involving multiple items.

H. Submit one digital copy in PDF format of each Application for Payment.

I. Include the following with the application:

1. Construction progress schedule, revised and current as specified in Section 01 3216.

2. Payment for materials and equipment stored off the site shall be conditioned upon compliance by the Contractor with procedures satisfactory to the Owner.

J. When Consultant requires substantiating information, submit data justifying dollar amounts in question. Provide one copy of data with cover letter for each copy of submittal. Show application number and date, and line item by number and description.

K. Submit Applications for Payment to Consultant at times stipulated below.

L. When Consultant finds Application properly completed and correct, Consultant will transmit 3 copies of Certificate for Payment to Owner for approval of payment, with one copy to Contractor, and one retained for files.

1.06 ALTERNATE CONSTRUCTION PAYMENT MANAGEMENT SYSTEMS:

A. Nothing contained herein would prohibit the Contractor from proposing the use of a Construction Payment Management System that substantially complies with the requirements of this section. The contractor shall pay all additional fees associated with the Owner and Consultant's use of this system.

1.07 PAYMENT FOR PRODUCTS STORED OFF THE PROJECT SITE

A. When delay or added cost to Owner can be avoided by storing Products off Site, Owner will make payment to Contractor for said Products provided that

B. Contractor shall:

1. Locate Storage Facilities within 20 miles of the Consultant's Office or the Project Site.

2. Make Storage Facilities available for Consultant's visual inspection.

3. Segregate and label Stored Products for specified Project.

4. Assume all risk for loss.

5. Assume responsibility for exceeding Product "Shelf-Life".

6. Protect Stored Products and provide applicable Insurance against their damage, discoloration, and theft, listing the Owner and any Mortgagee as Additional Named Insured.

7. Submit itemized Inventory and Schedule of Values for Stored Products together with Certificate of Insurance.

8. Submit payment requests to Owner as part of Contractor's regular Progress Payment Request. Payment requests can only be for the actual invoiced amount to the contractor or sub-contractor by their respective material supplier. Provide copies of invoice to justify amount requested.

9. Reimburse Owner for damages sustained if Stored Products are not delivered to Jobsite when needed.

10. Submit to Owner, with copy to Consultant, a written Waiver of Lien insuring Owner against claims for unpaid Storage Costs.

11. Upon receipt of payment from Owner, prepare and issue to Owner, with a copy for Consultant, and any Mortgagee, a Bill of Sale for Stored Products.

1.08 PREVAILING WAGE PAYMENT CERTIFICATION

A. Submit Prevailing Wage Payment Certification Forms as required by Section 00 7343.

1.09 APPLICATION PAYMENT SCHEDULE

A. Within 15 Days, following Owner's approval of payment of in-order Application for Payment, the Owner will:

1. Until Substantial Completion, pay Ninety-Five Percent (95%) as defined in General Conditions during the previous month, as estimated by Consultant.

B. After execution of Certificate of Substantial Completion, and within 15 days, following Owner's approval of payment of the next in-order Application for Payment, the Owner will pay:

1. Balance due under Contract, excluding a Retainage Amount of at least $1,000, or double the estimated value of uncompleted and/or unacceptable portions of Work, whichever is the greater amount.

C. Thirty (30) days after final inspection and acceptance by Owner, and within 15 days following Owner's approval of payment of final in-order Application for Payment, the Owner will pay:

1. Balance due under Contract, provided Work be then fully completed and Contract be then fully performed.

1.10 MODIFICATION PROCEDURES

A. Submit name of the individual authorized to receive change documents and who will be responsible for informing others in Contractor's employ or subcontractors of changes to the Contract Documents.

B. For minor changes not involving an adjustment to the Contract Sum or Contract Time, Consultant will issue instructions directly to Contractor.

C. For other required changes, Consultant will issue a Construction Change Directive document signed by Owner instructing Contractor to proceed with the change, for subsequent inclusion in a Change Order.

1. The document will describe the required changes and will designate method of determining any change in Contract Sum or Contract Time.

2. Promptly execute the change.

D. For changes for which advance pricing is desired, Consultant will issue a Proposal Request document that includes a detailed description of a proposed change with supplementary or revised drawings and specifications, a change in Contract Time for executing the change with a stipulation of any overtime work required and the period of time during which the requested price will be considered valid. Contractor shall prepare and submit a fixed price quotation within 7 calendar days.

E. Contractor may propose a change by submitting a request for change to Consultant, describing the proposed change and its full effect on the Work, with a statement describing the reason for the change, and the effect on the Contract Sum and Contract Time with full documentation and a statement describing the effect on Work by separate or other contractors. Document any requested substitutions in accordance with Section 01 6000.

F. Computation of Change in Contract Amount: As specified in the Agreement and Conditions of the Contract.

1. For change requested by Consultant for work falling under a fixed price contract, the amount will be based on Contractor's price quotation.

2. For change requested by Contractor, the amount will be based on the Contractor's request for a Change Order as approved by Consultant.

3. For pre-determined unit prices and quantities, the amount will based on the fixed unit prices.

4. For change ordered by Consultant without a quotation from Contractor, the amount will be determined by Consultant based on the Contractor's substantiation of costs as specified for Time and Material work.

G. Substantiation of Costs: Provide full information required for evaluation.

1. On request, provide the following data:

a. Quantities of products, labor, and equipment.

b. Taxes, insurance, and bonds.

c. Overhead and profit.

d. Justification for any change in Contract Time.

e. Credit for deletions from Contract, similarly documented.

2. Support each claim for additional costs with additional information:

a. Origin and date of claim.

b. Dates and times work was performed, and by whom.

c. Time records and wage rates paid.

d. Invoices and receipts for products, equipment, and subcontracts, similarly documented.

3. For Time and Material work, submit itemized account and supporting data after completion of change, within time limits indicated in the Conditions of the Contract.

H. Execution of Change Orders: Consultant will issue Change Orders for signatures of parties as provided in the Conditions of the Contract.

I. After execution of Change Order, promptly revise Schedule of Values and Application for Payment forms to record each authorized Change Order as a separate line item and adjust the Contract Sum.

J. Promptly revise progress schedules to reflect any change in Contract Time, revise sub-schedules to adjust times for other items of work affected by the change, and resubmit.

K. Promptly enter changes in Project Record Documents.

1.11 APPLICATION FOR FINAL PAYMENT

A. Prepare Application for Final Payment as specified for progress payments, identifying total adjusted Contract Sum, previous payments, and sum remaining due.

B. Application for Final Payment will not be considered until the following have been accomplished:

1. All closeout procedures specified in Section 01 7000.

2. Submit final Application for Payment with unconditional lien releases and supporting documentation not previously submitted and accepted in accordance with requirements of General Conditions.

PART 2 PRODUCTS - NOT USED

PART 3 EXECUTION - NOT USED

END OF SECTION

PART 1 GENERAL

1.01 SECTION INCLUDES

A. Preconstruction meeting.

B. Progress meetings.

C. Submittals for review, information, and project closeout.

D. Number of copies of submittals.

E. Submittal procedures.

1.02 RELATED REQUIREMENTS

A. Section 00 6000 - General Conditions.

B. Section 01 3216 - Construction Progress Schedule: Form, content, and administration of schedules.

C. Section 01 7000 - Execution and Closeout Requirements: Additional coordination requirements.

D. Section 01 7800 - Closeout Submittals: Project record documents.

1.03 CONSTRUCTION ORGANIZATION & START-UP

A. Responsible Parties:

1. Immediately following Contract execution, Owner will and Contractor shall identify who, within their respective organizations, will be responsible for Project Coordination.

B. The Contractor shall establish on-site Lines of Authority and Communications including the following:

1. Schedule attendance at Preconstruction Meeting and schedule and conduct Progress Meetings as specified in Section 01 3000.

2. Establish procedures for Intra-project Communications including:

a. Submittals.

b. Reports & Records.

c. Recommendations.

d. Coordination Drawings.

e. Schedules.

f. Resolution of Conflicts.

3. Technical Documents Interpretation:

   a. Consult with Consultant to obtain interpretation.

   b. Assist in resolution of questions or conflicts which may arise.

   c. Transmit written interpretations to Subcontractors and to other concerned parties.

4. Permits & Approvals:

   a. Verify that Subcontractors have obtained required Permits and Inspections for Work and for Temporary Facilities.

5. Control use of Site:

   a. Supervise Field Engineering and Project Layout.

   b. Allocate Field Office Space and Work and Storage Areas for use of each Subcontractor.

1.04 COORDINATING SUBCONTRACTORS' WORK

A. Coordinate the Work of all Subcontractors and make certain that, where the Work of one Trade is dependent upon the Work of another Trade, the Work first installed is properly placed, installed, aligned, and finished as specified or required to properly receive subsequent Materials applied or attached thereto.

B. Direct Subcontractors to correct defects in Substrates they install when Subcontractors of subsequent Materials have a reasonable and justifiable objection to such surfaces.

C. Do not force Subcontractors to apply or install Products to improperly placed or improperly finished Substrates that would result in an unsatisfactory or unacceptable finished Product.

1.05 COORDINATING WORK WITH WORK OF OWNER OR OTHER CONTRACTS

A. Coordinate, and make certain that, where Work of either party is dependent upon the other party, the Work first performed is properly placed, installed, aligned, and finished as required to permit the proper installation of the Work following.

B. If the Owner's Work in any way interferes with the Contractor's Work, so notify the Owner sufficiently in advance so that the Owner has reasonable time to make necessary adjustments.

C. If the Contractor's Work in any way interferes with Owner's Work, so notify the Owner as soon as possible. If the Contractor's Work must be modified to accommodate the Owner's Work, except as described elsewhere in this Specification, the Contract Sum and/or the Contract Time will, when necessary be adjusted by a Change Order.

D. Mechanical & Electrical Equipment start-up:

   1. Coordinate check-out of Utilities, Operational Systems, and Equipment.

   2. Assist in initial start-up and testing.

3. Record starting dates of Systems and Equipment operation.

E. At completion of Work of each Subcontract, conduct inspection to assure that:

1. Work is acceptable.

2. Specified cleaning has been accomplished, and Temporary Facilities and Debris has been removed from Site.

F. Substantial Completion: See Section 002113 1.13

PART 2 PRODUCTS - NOT USED

PART 3 EXECUTION

3.01 PRECONSTRUCTION MEETING

A. Owner will schedule a meeting after Notice of Award.

B. Attendance Required:

1. Owner.

2. Consultant.

3. Contractor.

4. Contractor's Superintendent.

5. Major Subcontractors.

C. Agenda:

1. Introductions.

2. Execution of Owner- Contractor Agreement.

3. Submission of executed bonds, insurance certificates and background checks.

4. Description of Project

5. Distribution of Contract Documents.

6. Submission of list of Subcontractors, list of Products, schedule of values, and progress schedule.

7. Designation of personnel representing the parties to Contract, Owner and Consultant.

8. Procedures and processing of field decisions, submittals, substitutions, applications for payments, proposal request, Change Orders, and Contract closeout procedures.

a. Written Change Order requests required

b. Supporting back-up will be required for all Change Orders

c. Describe Contractor's procedure for review and oversight in the preparation of Change Orders

d. Mark-up limitations on Change Orders (See General Conditions Article 7.1.4)

e. Processing time required

f. Applications for Payment

1) Use AIA documents G702 and G703 latest edition

2) Provide 4 signed and notarized copies

3) Wage certifications to be attached

9. Scheduling, start date and date of substantial completion.

10. Building permit status.

11. Prevailing wage requirements.

12. Public Agency submittal of RESPONSIBILITY DETERMINATION FORM to Construction Contractor's Board.

13. Communications.

14. Role of Owner's Project Manager.

15. Employee Security Screening and Identification Badging.

16. Submittals required per Contract Documents.

17. MSDS Information

18. Erosion control procedures

19. Waste management procedures

20. Environmental quality requirements

21. Hazardous materials

22. Construction activities, working hours, use of site and building.

23. Staging and parking areas.

24. Temporary facilities and utilities.

25. Request for information and clarification of design

26. Correction of Defects.

27. Weekly on-site progress meetings.

28. Safety and Emergency Procedures.

29. Verify that Contractor's Mandatory Drug Testing Program is in place.

30. Daily Clean-up

31. Project Closeout, substantial completion, final completion.

32. Record drawings and Operations and Maintenance Manuals

33. Tour of Project by Owner's staff and guests (if applicable)

34. Additional Comments

D. Consultant will record minutes and distribute copies within [five] days after meeting to participants, with digital copies to Owner, participants, and those affected by decisions made.

3.02 PROGRESS MEETINGS

A. Schedule and administer meetings throughout progress of the Work at weekly intervals.

B. Make arrangements for meetings, prepare agenda with copies for participants, preside at meetings.

C. Attendance Required:

1. Contractor.

2. Owner.

3. Consultant.

4. Contractor's Superintendent.

5. Major Subcontractors.

D. Agenda:

1. Review minutes of previous meetings.

2. Review of Work progress.

3. Field observations, problems, and decisions.

4. Identification of problems that impede, or will impede, planned progress.

5. Review of submittals schedule and status of submittals.

6. Review of off-site fabrication and delivery schedules.

7. Maintenance of progress schedule.

8. Corrective measures to regain projected schedules.

9. Planned progress during succeeding work period.

10. Coordination of projected progress.

11. Maintenance of quality and work standards.

12. Effect of proposed changes on progress schedule and coordination.

13. Other business relating to Work.

E. The Owner's Project Manager will record minutes and distribute copies within five days after meeting to participants, with digital copies to Contractor, Owner, participants, and those affected by decisions made.

3.03 PRE-INSTALLATION CONFERENCES

A. When required in individual specification sections, the Contractor shall convene a pre-installation meeting prior to commencing work of that section.

B. Require attendance of parties directly affecting, or affected by, work of the specific section.

C. Notify Consultant minimum four days in advance of meeting date.

D. The Contractor shall be responsible to prepare agenda and preside at meeting:

1. Review conditions of installation, preparation and installation procedures.

2. Review coordination with related work.

E. The Contractor shall be responsible to record minutes and distribute copies within four days after meeting to participants, with copies to Consultant, Owner's Project Manager, participants, and those affected by decisions made.

3.04 CONSTRUCTION PROGRESS SCHEDULE - SEE SECTION 01 3216

3.05 SUBMITTALS FOR REVIEW

A. When the following are specified in individual sections, submit them for review:

1. Product data.

2. Shop drawings.

3. Samples for selection.

4. Samples for verification.

5. Other information required in individual specification sections.

B. Submit to Consultant for review for the limited purpose of checking for conformance with information given and the design concept expressed in the contract documents.

C. Product Data:

1. Clearly mark each copy to identify pertinent Products.

2. Show performance characteristics and capacities.

3. Show dimensions, field dimensions, and required clearances.

4. Show wiring and piping diagrams, and controls.

5. Show standard schematic drawings and diagrams:

a. Modify to delete information not applicable to Work.

b. Supplement standard information to provide information specifically applicable to Work.

c. Assure that any photo copied material is clearly legible or provide all original material.

D. Samples will be reviewed only for aesthetic, color, or finish selection.

E. After review, provide copies and distribute in accordance with SUBMITTAL PROCEDURES article below and for record documents purposes described in Section 01 7800 - Closeout Submittals.

3.06 SUBMITTALS FOR INFORMATION

A. When the following are specified in individual sections, submit them for information:

1. Design data.

2. Certificates.

3. Test reports.

4. Inspection reports.

5. Manufacturer's instructions.

6. Manufacturer's field reports.

7. Other information required in individual specification sections.

8. Other types indicated.

B. Submit for Consultant's knowledge as contract administrator or for Owner. No action will be taken.

3.07 SUBMITTALS FOR PROJECT CLOSEOUT

A. Submit Correction Punch List for Substantial Completion.

B. Submit Final Correction Punch List for Substantial Completion.

C. When the following are specified in individual sections, submit them at project closeout:

1. Project record documents.

2. Operation and maintenance data.

3. Warranties.

4. Bonds.

5. Other information required in individual specification sections.

6. Other types as indicated.

D. Submit for Owner's benefit during and after project completion.

3.08 NUMBER OF COPIES OF SUBMITTALS

A. Electronic Documents: Submit one electronic copy in PDF format; an electronically-marked up file will be returned. Create PDFs at native size and right-side up; illegible files will be rejected.

B. Samples: Submit the number specified in individual specification sections; two of which will be retained by Consultant.

1. After review, produce duplicates.

2. Retained samples will not be returned to Contractor unless specifically so stated.

3. Show full range of color, texture & pattern.

3.09 SUBMITTAL PROCEDURES

A. Shop Drawing Procedures:

1. Prepare accurate, drawn-to-scale, original shop drawing documentation by interpreting the Contract Documents and coordinating related Work.

2. Generic, non-project specific information submitted as shop drawings do not meet the requirements for shop drawings.

B. Transmit each submittal with a copy of approved submittal form.

C. Transmit each submittal with a transmittal form that clearly describes submittal contents and the quantity of items delivered.

D. Sequentially number the transmittal form. Revise submittals with original number and a sequential alphabetic suffix.

E. Identify Project, Contractor, Subcontractor or supplier; pertinent drawing and detail number, and specification section number, as appropriate on each copy.

F. Apply Contractor's stamp, signed or initialed certifying that review, approval, verification of Products required, field dimensions, adjacent construction Work, and coordination of information is in accordance with the requirements of the Work and Contract Documents.

G. Deliver submittals to Consultant at business address.

H. Schedule submittals to expedite the Project, and coordinate submission of related items.

I. For each submittal for review, allow 15 days excluding delivery time to and from the Contractor.

J. Identify variations from Contract Documents and Product or system limitations that may be detrimental to successful performance of the completed Work.

K. Notify Consultant in writing, at submission time, of any deviations in Submittals from Contract Document requirements.

L. Provide space for Contractor and Consultant review stamps.

M. When revised for resubmission, identify all changes made since previous submission.

N. Distribute reviewed submittals as appropriate. Instruct parties to promptly report any inability to comply with requirements.

O. Submittals not requested will not be recognized or processed.

P. Submit Shop Drawings, Product Data, and Samples only for those Items specifically required. The Consultant will not be obligated to review Shop Drawings, Product Data, or Samples other than those required by the Contract Documents.

Q. Perform no Work or Fabrication requiring Submittal until Consultant approves Submittal.

END OF SECTION

PART 1 - GENERAL

1.01 REQUIREMENTS INCLUDED

A. Related Requirements

B. General Requirements

C. Definition of Schedule Documents and Submittal Requirements

D. Contractor's Schedule Management

E. Coordination

F. Schedule Format Requirements

G. Weather Impacts and Delays

H. Schedule Updates and Schedule (Network) Revisions

I. Time Impact Analysis for Changed Conditions

J. Recovery Schedule

K. Timeliness of Schedule Document Submittals

L. Owner Review of Schedule Submittals

1.02 RELATED REQUIREMENTS

A. The General Provisions, and General Requirements of the Specifications apply to the work specified in this Section.

B. Section 00 0120 – Bidder-Designed Items and Deferred Submittals

C. Section 01 6300 – Approval For Substitution and Product Options

1.03 GENERAL REQUIREMENTS

A. The Schedules (and schedule documents) described herein are for the following purposes:

1. To define the Contractor's Baseline Plan (including logic and use of resources) for completing the Work

2. To report progress in completion of the Work

3. To evaluate any changes to the Contractor's Baseline Plan and subsequent updated plans

B. In addition, the schedule documents shall serve as a communication tool between the Owner and the Contractor, and the Contractor and its subcontractors. The Owner

encourages the Contractor to use the Schedule to establish an understanding with all parties of the assumptions regarding the Work, and the various constraints and opportunities that are possible within the plan. As the work progresses, the Contractor and the Owner's Representative will use the Schedule to assess impacts and to formulate the best methods to complete the Work on, or ahead of the contractual completion dates. The schedule documents will also be used by the Contract Administrator to evaluate the Contractor's monthly progress payment requests.

C. The Work shall be scheduled and performed pursuant to the provisions of the Contract including any specific dates for Contract completion milestones, phase completion and the like or requirements included in the General Conditions, the Owner-Contractor Agreement, or elsewhere in the Contract documents. All Contract milestone and completion dates listed in these specifications, or elsewhere in the Contract documents, represent only interface dates or major items of the Work. The Contractor is responsible for completion of all aspects of the Work in accordance with the Contract.

D. At any time throughout the course of the Work, the Owner reserves the right to require additional activities to be added to the Schedule to further define the Contractor's plan and intentions regarding the execution of the Work. In each instance, such activities or changes shall be made by the Contractor at no cost or delay to the Owner. The Owner's Representative suggestions would not waive the contractor's right to establish its means and method or its obligation to execute the project in a timely and efficient manner.

E. Should the Contractor desire or intend to complete the Work, or any portion of the Work, earlier than the specified Contract milestone, phase, or similar dates or the overall Contract completion date, the Owner will not be liable to the Contractor for any costs or other damages should the Contractor be unable to complete the Work before Contractor's earlier milestone or completion dates. The duties and obligations of Owner to the Contractor shall be consistent with and applicable only to the completion of the Work on the specified Contract milestone dates or the Contract completion dates unless the Owner and the Contractor otherwise agree in writing, formalized by a change order. The Contractor may finish early but shall not make any claims for additional time-related costs before the expiration of the specified Contract milestone, phase, or similar dates or the overall Contract completion date.

F. The services provided by the Owner's Representative, the existence of schedules, networks or any other charts or services prepared or performed by the Owner's Representative, shall in no way relieve the Contractor of the responsibility for complying with all of the requirements of the Contract documents, including, but not limited to, the responsibility for completing the Work within the Contract Time and the responsibility of planning, scheduling, and coordinating the Work.

G. It is understood that during the prosecution of certain aspects of the work, i.e., phasing; commissioning; work with possible impacts to facilities and/or tenant operations; or utility shutdowns, a separate detailed scheduled will be required. The Contractor shall prepare these schedules in a timely manner as required for distribution by the Owner's Representative to all affected parties. The Contractor shall provide these schedules at no additional cost.

H. In addition to requirements specified herein, schedules shall include the following activities specific to Owner:

1. Delivery of Operational and Maintenance Training Manuals.

2. Submittal and expected approval of manufacturer's recommended spare parts list.

3. System inspection and punch list preparation.

I. The Contractor, including his Project Manager and Superintendent shall hold an orientation meeting with Owner, wherein the Contractor presents his approach to planning the work, developing the schedules, and meeting the requirements of this Section. This orientation meeting shall be held prior to submittal of the Baseline Schedule. The Contractor shall not delay preparation of the required schedules and schedule documents prior to this meeting; however, the Contractor shall be responsible for any changes or corrections to his scheduling as a result of this meeting.

1.04 DEFINITION OF SCHEDULE DOCUMENTS AND SUBMITTAL REQUIREMENTS

A. The following outlines the schedules and schedule documents required by this section to be submitted by the Contractor. Details on each item (and all items) to be submitted are provided in further paragraphs in this Section and in referenced sections.

1. Preliminary (4-Month) Schedule: This schedule is to detail all Contractor work, including procurement activities, mobilization, submittals, and construction activities for the first four months following the date of Notice to Proceed, and be used while the Contractor is developing his baseline schedule. All critical or completion dates required in the contract shall be incorporated into this schedule. The following submittal requirements apply to the preliminary schedule:

a. The Preliminary Schedule shall be submitted in a format and with content acceptable to the Owner's Representative and shall be submitted to the Contract Administrator no later than 10 calendar days after Notice to Proceed.

b. For purposes of this Preliminary Schedule, the Contractor is to assume that construction activities will occur within 30 calendar days after Notice to Proceed.

c. Allow five (5) working days for initial review and five (5) working days for resubmittal reviews by the Contract Administrator.

2. Baseline Schedule: This is a detailed schedule including a narrative of schedule status developed using the Critical Path Method (CPM). It represents the Contractor's plan for the Work from the date of award of the Contract and will be used to make the first Progress Schedule.

a. Submittal requirements: The Baseline Schedule shall be submitted in Primavera P6 format and with content acceptable to the Owner's Representative. The Contractor shall obtain (1) perpetual license of

Primavera P6 EPPM for use by the District PM and (1) license for use by the contractor during the contract duration.

b. Narrative of Schedule Status: This is a narrative that describes the key aspects of the submitted schedules. The Baseline Schedule narrative shall define the key aspects of the Contractor's plan for the Work that

includes the following key sections. The narratives submitted with the Baseline Schedules are required to be stand-alone documents that do not require Baseline Schedules to be attached in order to be comprehensible:

(1) The layout and logic used in the Schedule

(2) Critical submittals

(3) Long-lead equipment and material procurement.

(4) The critical path

(5) An overall float analysis

(6) Any interface concerns with Owner

(7) Costs to date

c. Activities: The schedule shall be grouped by the following work activities:

(1) Mobilization Activities

(2) Procurement Activities

(3) Manufacturing Activities

(4) Quality Control Activities

(5) Installation Activities

(6) Testing Activities

(7) Commissioning Activities

(8) Demobilization Activities

3. Master Summary Schedule: The cost-loaded Master Summary Schedule shall be developed by the Contractor and submitted to the Contract Administrator with the Baseline Schedule and each monthly Progress Schedule.

a. The Master Summary Schedule shall show the sequence in which Contractor proposes to perform the Work, all completion dates and critical dates indicated in the Contract Documents, and the dates on which Contractor plans to start and finish major portions of the Work. The Contractor shall include enough activities in the Master Summary Schedule, so that all significant portions of the Work, critical interfaces, coordination with Owner and milestone and completion dates are addressed.

b. The Summary Schedule shall be cost-loaded, at a high level, to develop a cash flow curve.

4. Critical Path Schedule: This schedule shall show the critical path derived first from the Baseline Schedule and subsequently from the current Progress Schedule. This is a time-scaled network logic diagram, showing only the current critical path of the Work along with its current progress. In the event of near critical path work (less than 10 days of float), the Owner's Representative may request the near critical paths also be shown. The following submittal requirements apply to the Critical Path Schedule:

   a. Submittal Requirements:

      (1) Submit with Baseline Schedule.

      (2) Update and submit with the Progress Schedule.

      (3) Export Primavera P6 schedule data to the client in live file format for all submissions.

5. Progress Schedule: This is a detailed schedule, developed using the Critical Path Method (CPM), which is derived from the Baseline Schedule. The first Progress Schedule is the initial monthly progress update of the Baseline Schedule. Subsequent Progress Schedules will be submitted on a monthly basis that updates the previously issued Progress Schedule. The Progress Schedule will also be used to compare percent complete requested by the Contractor in the monthly progress payment applications, to analyze delays and impacts in all Time Impact Analyses (TIA), and to determine whether a Recovery Schedule is needed from the Contractor.

   a. Submittal requirements: Progress schedules are due monthly to coincide with the progress payment requests. The updated progress schedule will be targeted against the approved baseline and will include baseline start, finish, float, and original duration.

   b. Narrative of Schedule Status: This is a narrative that describes the key aspects of the submitted schedules. The Progress Schedule narrative shall define the key aspects of the Contractor's plan for the Work that includes the following key sections. The narratives submitted with the Progress Schedules are required to be stand-alone documents that do not require Progress Schedules to be attached in order to be comprehensible:

      (1) Progress in Last Period

      (2) Critical Path Progress and Concerns

      (3) Potential Delays and Time Impact Analyses

      (4) Submittal Status (focus on critical submittals and concerns)

      (5) Equipment and Material Delivery Status

      (6) Quality Control Status

      (7) Manufacturing Status

(8) Costs to Date

6. Weekly Short Interval Schedule: This is a three-week Look-Ahead Schedule for use in the weekly schedule review meetings. The weekly interval schedules shall include the current activities from the Progress Schedule and all other schedule information deemed necessary.

   a. Submittal requirements:

      (1) Provide the schedule in a format acceptable to the Owner's Representative.

      (2) Submitted no later than 24 hours before the weekly schedule review meeting.

      (3) Distribute the final weekly interval schedule to all field supervision no later than the next workday following the weekly schedule review meeting.

7. Recovery Schedule: This schedule will be required from the Contractor in the event that certain conditions exist such that critical or milestone dates are in jeopardy of being delayed. Recovery Schedule requirements are defined in later paragraphs of this section.

   a. Submittal requirements: Submit five (5) working days after notice from the Contract Administrator that a Recovery Schedule is required.

8. Time Impact Analysis: This schedule analysis shall be part of the back-up data required from the Contractor in the event the Contractor claims that Contract changes delayed or impacted the Work and shall be included in any change proposal claiming increase in time. The Time Impact Analysis requirements are defined in later paragraphs of this section.

   a. Submittal requirements: Formal submittal of the Time Impact Analysis shall be within 15 calendar days of occurrence of the delay. Failure to submit within the 15 calendar days waives the Contractor's right to claim additional costs or time as a result of such delay.

9. Schedule of Submittals: Submit per the following table:

Deliverable	Hard Copies	Electronic Copies	Submittal Due	Remarks
Preliminary (Four-Month) Schedule	2 color copies of each sort	1	10 calendar days after the Notice to Proceed	One-time submittal. Submit using same format requirements as the Baseline Schedule
Baseline Schedule	2 color copies of each sort	1	30 calendar days after the Notice to Proceed	Acceptance is prerequisite to issuance of NTP. Critical Path Schedule is integral to Baseline Schedule. **Also, see Note (1).**
Progress Schedule		1	Monthly	Critical Path Schedule is integral to Progress Schedule. **Also, see Note (1).**
Master Summary Schedule		1	With the Baseline Schedule, then Monthly	One-time submittal. Submit with the Baseline Schedule and each Progress Schedule
As-Built Schedule	Include color copy in project O&M	1	Within 30 days of substantial completion	Project schedule shall be considered as-built for work completed and updated with each progress billing. Final document shall be included in O&M
Weekly Look-Ahead Schedule	Sufficient copies for weekly meeting attendees	1	1 Electronic copy 24 hours before weekly schedule review meeting, harmonize with sufficient copies for attendee's color copies presented at OAC Meeting	
Recovery Schedule	2 color copies	1	Within 5 days of notice to submit	
Time Impact Analysis	2 color copies	1	Within 15 days of date of delay claimed	Submit with all changes requesting time extensions

Note (1) Includes Master Summary Schedule, Narrative of Schedule Status, Manpower Loading Curve, and Subcontractor Log.

1.05 CONTRACTOR'S SCHEDULE MANAGEMENT

A. Scheduling Organization: The Contractor shall provide a Contractor's Scheduling Manager (CSM) to the implementation and management of the scheduling requirements of the Contract documents. The CSM (who may be the Contractor's Project Manager, Superintendent, or other qualified staff person) shall be on site at all times during the progress of the work, or as otherwise authorized in writing by the Contract Administrator.

B. Qualifications of Contractor's Scheduling Manager:

1. The CSM shall demonstrate acceptable professional familiarity with P6 software, hardware, and/or other scheduling systems and experience necessary to implement all scheduling requirements of the Contract in a timely and expeditious manner.

2. The Owner's Representative will monitor the performance of the CSM. The CSM's performance will be judged on the timeliness and completeness of Contractor's compliance with the scheduling requirements of the Contract documents. If the CSM fails to perform in accordance with the scheduling requirements of the Contract documents, the CSM shall, at the direction of the Contract Administrator, be replaced at no cost to Owner or delay allowable to the project.

1.06 COORDINATION

A. The Contractor shall coordinate the Work with that of Owner contractors, Owner Operations, and Owner tenants, and shall cooperate fully with the Owner's Representative in maintaining an orderly progress toward completion of the Work as scheduled.

B. A Time Impact Analysis (TIA) shall be required to support any claim by the Contractor for delay caused by failure of Owner-furnished equipment and materials to arrive as scheduled, or failure of other Owner interface work or tenants to meet their schedules. The TIA shall be based on Owner activities having the same level of predecessor and successor logic to display delay impacts as the Contractor's Work.

C. The Contractor shall inform its subcontractors of the delivery status of Owner-furnished equipment and material, and of the progress of other interfacing Owner construction work while the Work is underway.

1.07 SCHEDULE FORMAT REQUIREMENTS

A. Unless otherwise specified, the Baseline and Progress Schedules shall be produced utilizing the Microsoft Windows based Primavera P6 Project Management of the most current version.

B. The Baseline and Progress Schedules shall employ the Critical Path Method (CPM) using retained logic for the planning, scheduling and reporting of the work to be performed under this Contract. The type of schedule shall be Precedence Diagramming Method (PDM).

C. The Baseline and Progress Schedules shall include but not be limited to:

1. All Critical, Milestone, and Completion dates defined in the Contract, as well as Owner-provided equipment delivery dates.

2. Date of Contract Award, Notice To Proceed, Mobilization, Substantial Completion, and Overall Beneficial Occupancy, Completion of each Phase, Pre-final Inspections, Final Inspections, and Final Acceptance.

3. Critical procurement and submittal activities including: shop drawings and sample submittals, Owner review of submittals, re-submittals and Owner review of re-submittals, fabrication and delivery for all key, critical path, near critical path and long-lead equipment and material. Owner reserves the right to require the Contractor to add procurement activities to the schedule for any key or long-lead equipment, materials or submittals it deems necessary to monitor the Contractor's schedule for this work.

4. Quality Control Activities, Testing, Pre-Installation Activities, Commissioning, training and closeout activities.

5. Offsite activities that interface with the Contractor's Work, including work by Owner and Owner contractors, delivery of Owner-furnished materials, utilities, agencies, critical Owner operations, Owner tenants, and other similar activities.

D. Activity Descriptions and Setup

1. The description of work by activity and activity coding shall contain the specific type of work to be done and the physical area of the work to which the activity pertains.

2. Activity boundaries shall be easily measurable, and descriptions shall be clear and concise. Activity descriptions should not be prefaced with "Begin" or "Complete." The beginning and end of each activity shall be readily verifiable, and physical progress shall be quantifiable.

3. In general, each critical path and key activity shall be associated with a single performing organization (subcontractor). For other activities, where there is similar type work in an area, organizations (subcontractors) may be grouped for a single activity. Where deemed necessary to define critical, key or unusual work, Owner reserves the right to require additional activities be added to the Contractor's schedule to provide that an activity be associated with each organization (subcontractor). The organization related to the activity shall be identified in a background sort code, such that reports sorted by organization can be made using the scheduling software. Construction Specifications Institute (CSI) codes relating to the division of the work shall be assigned to activities in the same manner described above for organizations. CSI codes are also to be assigned to background sort codes that allow reports by CSI code to be made using the scheduling software.

4. Activity durations over fifteen (15) working days shall be kept to a minimum and shall be used only for non-construction activities, such as shop drawing and sample submittals, fabrication and delivery of materials and equipment, concrete curing, and General Conditions activities. Exceptions to this shall be accepted in writing by the Contract Administrator. The duration of activities shall be in workdays.

5. Activity costs shall be limited to a maximum of Two-Hundred-Fifty-Thousand Dollars ($250,000), excluding major equipment and materials. Exceptions to this shall be accepted in writing by the Contract Administrator.

6. For critical path and near critical path activities, Contractor shall use Finish-to-Start relationships to the extent possible. Contractor shall use more activities if necessary, to use Finish-to-Start relationships in preference to use of Start-to-Start relationships. The Owner reserves the right to require the addition of activities to further define critical path and near critical path work in the Schedule.

7. Activities that constitute the controlling operations or critical path will be identified by use of color (red). The critical path is defined as activities with total float less than one day. Near critical is defined as total float in the range of one to ten days. The critical path and near critical activities shall be less than 25 percent of the total activities in the Baseline Schedule.

8. Imposed completion dates for events other than the Milestone Dates or Completion Dates are generally not permitted. Artificial constraints (imposed start dates) are generally not permitted, except possibly for use in Owner- furnished materials, Owner interface dates and the like. Upon creating a new project schedule in the software, the option planned start and planned completion dates should be appropriately inserted. This will allow the schedule calculations to identify negative float when projected dates slip past the planned completion date. All Owner-furnished materials and Owner interface dates shall have an early start/finish and late start/finish range. All Owner dates shall be related to the Contractor's Work with predecessor and successor logic such that float is correctly calculated on Owner-furnished materials and Owner interface dates.

9. Activity numbering shall be spaced (or gapped) to allow inclusion of new activities between existing activities while still maintaining a similarity of numbering for like activities. Numbering by area, level, etc. is encouraged to assist in analysis. The numbering may be alphanumeric to allow easier identification of areas, etc. At a minimum, the following code fields should be included:

   a. RESP – Responsibility (Owner, Owner's Representative, Sub Consultants, Jurisdictions, Key Third Parties, Contractors, Sub Contractor and, Vendors)

   b. PHAS – Phases

   c. AREA – Locations

   d. STEP – Steps or Sub AREAs

   e. ITEM – Specification Section Numbers

   f. CONO – Change Order Numbers

10. Activities that have started and are in progress shall be "scheduled" on each submitted schedule. Planned durations for remaining work and planned completions of remaining work on activities shall be used. Activities shall not "ride" the data date line, with scheduled completions being the remaining durations, unless the Contractor actually plans to complete work within the remaining duration. Schedules submitted with activities "riding" the data date line will not be accepted by Owner.

11. The work breakdown and coding structure (WBS) should, at a minimum, incorporate the following:

a. Milestones/Hammocks

b. Deferred Approvals (by CSI, including Agency Approvals)

c. Submittals (by CSI)

d. Quality Control Activities, Pre-Installation Activities, Commissioning, Designer of Record Observations, Mock-ups

e. Work

i. mobilization

ii. Grading/Underground Utilities

iii. Foundations

iv. Structures

v. Exterior Skin and Roof

vi. Interior Construction:

a. By Floor

b. By Major Unique Functional Area

c. Electrical and MEP Equipment

d. Unique Elements

e. Equipment, including OFCI, OFOI and OFOICC

f. Start-Up, Commissioning and Test & Balance (by system and element)

g. Fire and Life-Safety and Systems Pre-Tests (by system and element)

h. Fire and Life-Safety Jurisdictional Tests and Inspections (by system and element)

i. Final Sign Offs by the Design Team and Jurisdictions

E. Schedule Layout and Sequence of Activities

1. The schedule layout shall be consistent with the Project Conditions and milestones set forth in the Contract documents. Work to complete each milestone shall be easily identifiable in the Contractor's overall schedule.

2. The layout shall be consistent with the Work required to meet the Contract milestone dates. In general, it is desired to have the Work needed to meet the Contract milestones be detailed activities that summarize, or roll-up to provide plan and status information reported for the milestone. The summarized overall

schedule shall allow reporting of physical progress, cost, and manpower loading for the entire work. Owner intent will be to use the Contractor's schedule for milestones to summarize activities in Owner Master Schedule for all projects.

3. The Schedule layout shall be arranged to allow easy physical progress monitoring of physical areas. Essentially, each level and area within level or area and level within area or the like shall be broken down within the Schedule. These areas and levels shall summarize (or rollup) for reporting purposes. The Contractor shall establish the layout that is needed to meet his Contract responsibilities. The Contractor shall use his selected layout to coordinate with the Contractor's submitted progress payment applications, such that the Schedule, physical progress, the progress payment application and physical progress can be compared to determine the actual progress payments to be made to the Contractor.

4. The calendar is established including agreed working times and holidays. The calendar should not be altered during the project unless the Owner's Representative expressly agrees.

5. Only activity types such "Start Milestone," "Finish Milestone," and "Task" will be allowed with prior authorization by the Owner's Representative. Level of effort (LOE) activities may be used to summarize work as needed to produce summary level schedules for presentation purposes.

6. All activities should have both predecessor and successor logic ties that accurately represent the sequence and interdependence of all related activities except Project Start (which would not have any predecessors) and the last Contract Milestone (which would not have any successors).

7. Negative lags may not be used (there will be no exceptions to this requirement). FS – Finish-to-Start with zero (0) duration logic ties are preferable.

8. SF – Start-to-Finish logic ties are not acceptable.

F. Formats of Schedules Submitted to Owner's Representative

1. The formats of schedules (and schedule documents) shall be submitted to the Owner's Representative are described below. The formats described are solely for reporting information and analysis use with Owner and are not intended to direct the Contractor in his own methods of scheduling. The Contractor may use any schedule format needed for his own use in performing his responsibilities in the Contract.

2. All schedules (and schedule documents) shall be submitted with clear identification of Owner and Contractor's job numbers, schedule names, descriptions, plot dates, data dates, file numbers, issue numbers and the like.

3. All Baseline, Progress and Summary Schedules submitted shall be formatted in a fixed sequence of summary and detail activities for the Contract duration for ease of reference in progress updates. This sequence shall be established by the Contractor and acceptable to the Owner's Representative. The sequence shall be set up in the software such that re-sequencing or reorganizing of the Schedules is not required to generate Owner required schedules and reports.

This allows a one to one comparison of each Schedule issued with previous Schedules for analysis purposes, including the As-built Schedule.

4. All Baseline, Progress, and Summary Schedules shall be submitted with the activity description data listed from left to right, as follows: Activity ID, Activity Description, Original Duration, Remaining Duration, Total Float, Percent Complete, Early Start, and Early Finish. The early start and finish dates shall display an “A” after the dates if started (and finished). The Baseline Schedule shall also have the late start and late finish dates to the right of the early finish dates. The Owner reserves the right, at no cost, to require the Contractor to add the late start and late Finish dates to the Progress and Summary Schedules at any time.

5. The status bars on all schedules shall display the physical percent complete of progress. This same physical percent complete shall also be used in the data field. The percent complete of activity duration to show progress shall not be used.

6. The Baseline and Progress Schedules shall be submitted as color plotted time-scaled logic diagrams, with sufficient calendar and spacing to allow activity description information, bars and logic to be easily read. For each submitted schedule, a color plotted time-scaled logic diagram of just critical path activities shall be submitted. The fixed format, as described above, shall be used for all time-scaled logic diagram submittals throughout the duration of the project.

7. The Baseline, Progress, and Summary Schedules shall be submitted in bar chart format with activity data on the left side and bars on the right side. Logic shall not be displayed. Activity descriptions shall be displayed in the bar area. These bar chart schedules shall be 11” x 17” in size, and readable.

8. The Progress Schedule shall be submitted in an additional bar chart format that displays the previous month’s Progress Schedule as a “Target” schedule for comparison use. The first Progress Schedule shall use the Baseline Schedule as the “Target” schedule. The “Target” bars shall be of smaller size, of different color, and below the current schedule’s bars. Two color copies shall be submitted. The size shall be 11” x 17”.

9. The Baseline and Progress Schedules shall be submitted in a bar chart format, as described above, but shall contain only the critical path activities. In the event that the Contractor’s schedule has more than 25 percent of the activities as critical path or near critical path, the Contractor shall submit an additional bar chart schedule containing both the critical path and near critical path (as previously defined) activities.

10. The Baseline and Progress Schedules shall be submitted with a tabular report that displays the activity data previously listed in this subsection, sorted by Activity Number. Owner reserves the right to request up to two additional tabular reports, in a format requested by the Owner’s Representative, with any schedule submittal, Time Impact Analysis, or Recovery Schedule, at no additional cost to Owner.

11. The Baseline and Progress Schedules shall be submitted with a predecessor and successor report in 8-1/2” x 11”, black and white format, displaying the activity data previously listed in this subsection and the predecessors and successors for

each activity. This shall be in the fixed activity format.

12. All schedules and schedule documents submitted to the Owner's Representative shall be in hard copy, as described above, and in the submitted format via electronic transmission that contains the schedule data files.

1.08 WEATHER IMPACTS AND DELAY

A. The Contractor agrees that he shall not be entitled to a time extension due to normal inclement weather, which can be expected at the project locale due to precipitation, snow, temperature, or other weather conditions. Normal inclement weather shall be defined as the most recent five-year average of accumulated record mean values from climatological data compiled by the US Department of Commerce, National Oceanic and Atmospheric Administration (NOAA) monitoring station nearest to the project site. The Contractor shall include in its Baseline Schedule and all Progress Schedules, allowances for normal inclement weather. Agreed rain days will be tied to specific activity sequences in specific seasons.

B. The Contractor shall only be entitled to an extension of Contract time, if the Contractor can substantiate that the severity of the weather was in excess of the normal inclement weather, and such weather conditions actually delayed the critical path of the Work. Time extensions will not be allowed for weather delays to non-critical path portions of the Work. Approved time extensions for abnormal weather conditions shall be deemed excusable and non-compensable.

C. No extension of time will be made for abnormal inclement weather after the portions of the Work in progress at the time are enclosed, except for site work. Site work delays at that time will be allowed only if the abnormal weather causes a critical path delay to the Contract Time or milestone date related to that site work. For the purpose of this paragraph, the term enclosed is defined to mean when the Work in an area of a structure or building is sufficiently closed in (portions of exterior walls up and portions of roof in place), so as to permit adequate conditioning of the air to allow the various trades to perform the Work.

D. The Contractor is responsible for providing any temporary weather enclosures necessary for Work to proceed without weather delays.

1.09 SCHEDULE UPDATES AND SCHEDULE (NETWORK) REVISIONS

A. During the course of the Work and issuance of the Progress Schedules, updating to reflect actual progress shall not be considered revisions to the Schedule. Such updating shall include revisions to activity durations and certain sequences on a monthly basis. Included in the Progress Schedule updates shall be activities and changes that have already been reviewed and accepted by Owner such as the effect of accepted Owner changes, the agreed duration of delays caused by acts of God or other conditions or events which have affected the progress of the Work. The Progress Schedules, when formally submitted, shall display current progress, as well as displaying the forecast or projected Work to the end of the Project.

B. On all Progress Schedule submittals, the Contractor shall submit a printed list of all schedule logic changes along with the reason for each change. This list is an integral part of the Schedule submittal. This list shall be generated from the scheduling software and be the same logic included electronic transmission. Owner shall accept this list as part of its overall Progress Schedule submittal review and acceptance process.

C. Should the Contractor, after Owner acceptance of the Baseline Schedule and any Progress Schedules, desire to change the logic of its plan of construction, the Contractor shall submit in writing its requested revisions to the Owner's Representative. The request shall include a written narrative of the reasons for the activity and logic changes, a description of the logic for rescheduling the work, and the methods of maintaining adherence to critical and milestone dates. In addition, for changes affecting sequences of the Work, the Contractor shall provide a time-scaled logic diagram that compares the original sequence of work to the requested revised sequence of work. The Contractor shall submit the requested revision in a timely manner such that Owner may review the request submittal the same time frame and manner as required for other schedule submittals. Upon Owner acceptance of the request, the Contractor shall include the revision in the next upcoming Progress Schedule.

D. Neither the updating or revision of the Contractor's Progress Schedule, nor the submittal, updating, change or revision of any schedule (or schedule document) for the Owner's review and acceptance shall have the effect of amending or modifying, in any way, the Contract Time, any Contract completion date, or Contract milestone dates or of modifying or limiting in any way Contractor's obligations under this Contract.

1.10 TIME IMPACT ANALYSIS FOR CHANGED CONDITIONS

A. If delays are experienced that the Contractor believes are caused by Owner, the Contractor shall submit a formal written Time Impact Analysis (TIA). The TIA shall define the impact of each change or delay to the current accepted Progress Schedule. The TIA shall include a written narrative of the impact of such delays, and a schedule in time-scaled logic diagram format that depicts how the changed or delayed work affects other activities in the current accepted Progress Schedule.

B. In addition to the Contractor's presentation of the impact in the TIA, the Contractor shall include in the TIA, a mitigation plan that reduces or eliminates the claimed delay. The mitigation plan shall include specific Owner and Contractor actions as well as the cost to the Contractor to proceed with the mitigation.

C. In the event that the Contractor requests a Contract time extension, the time impacts to critical path activities in the current accepted Progress Schedule shall be clearly shown on a schedule in time-scaled logic diagram format. Extensions of time will be granted only to the extent that such changes or delays cause the time for the changed activity and related activities to exceed the total float along the affected path of activities at the time of Owner directive to proceed with the change or the actual commencement of the delay included in the TIA.

D. Schedule float is not for the exclusive use or benefit of either the Contractor or Owner. Neither Owner nor the Contractor "owns" the float. The project or Work "owns" the float. Liability for delay to Contract or milestone dates rests with the party whose action (or inaction) caused the delay beyond the float that was available at the time of the delaying action (or inaction).

E. Each formal TIA shall be submitted as an integral element of the Contractor's change order proposal.

F. A copy of Owner accepted TIA will be incorporated in the change order signed by Owner and the Contract Administrator for such change. Any changes to the Schedule will be incorporated into the next update of the Progress Schedule following the Owner's acceptance of the TIA.

G. The Contractor shall be responsible for all costs associated with the preparation of the TIA and the incorporation of accepted TIA's, or portion of TIA's, in the Progress Schedule.

H. If agreement is not reached on a TIA, or a portion of a TIA, the Progress Schedule, including any time extensions, shall be revised only to the extent accepted by Owner. For any TIA, or portion of a TIA, that is not accepted by Owner, the Contractor may submit a claim in accordance with the Conditions of the Contract.

1.11 RECOVERY SCHEDULE

A. Should any conditions exist, such that certain activities shown on the Contractor's Progress Schedule fall behind schedule to the extent that any of the mandatory critical dates or milestone completion dates are at risk of being delayed, the Contractor shall be required, at no cost to Owner, to prepare and submit to the Owner's Representative a supplementary Recovery Schedule. The Recovery Schedule shall be in a form and detail appropriate to the need, to explain and display to the Owner's Representative how the Contractor intends to re-schedule those activities to regain compliance with the last previously accepted Progress Schedule.

B. After determination by the Owner's Representative of the requirement for a Recovery Schedule, the Contractor shall, within five (5) calendar days, submit to Owner's Representative, the Recovery Schedule. The Recovery Schedule shall represent the Contractor's best judgment as to how the Contractor's work shall be reorganized such that the work may return to the accepted Progress Schedule within the maximum one-month period. The Recovery Schedule shall be prepared at a similar level of detail as the Progress Schedule and shall be based on the accepted Progress Schedule.

C. The Owner's Representative will have seven (7) calendar days to review the Recovery Schedule submittal. Any revisions that result from the Owners Representative's review shall be resubmitted within three (3) workdays by the Contractor for acceptance by the Contract Administrator. The accepted Recovery Schedule shall then be the Schedule that the Contractor shall use in planning, organizing, directing, coordinating, performing and executing the Work (including all activities of subcontractors, equipment vendors and suppliers) that is included on the Recovery Schedule. All other Work shall proceed per the accepted Progress Schedule.

D. No later than five (5) calendar days prior to the expiration of the Recovery Schedule, the Owner's Representative and Contractor will meet to determine whether the Contractor has regained compliance with the accepted Progress Schedule. At the direction of the Owner's Representative, one of the following will occur:

1. If, in the opinion of the Owner's Representative, the Contractor is still behind schedule, the Contractor shall prepare another Recovery Schedule, at the Contractor's expense, to take effect for a maximum of one additional month from the start of the new Recovery Schedule.

2. If, in the opinion of the Owner's Representative, the Contractor has sufficiently regained compliance with the Progress Schedule, the use of the Progress Schedule shall be resumed.

1.12 TIMELINESS OF SCHEDULE DOCUMENT SUBMITTALS

A. The Schedule (and schedule documents) shall be submitted in a timely manner, as required by this Section. Failure to submit the Schedule and schedule documents on time

and in an acceptable format shall result in withholding of payments and other remedies.

1.13 OWNER REVIEW OF SCHEDULE SUBMITTALS

A. All schedule documents shall be formally submitted and will be reviewed by Owner and returned to the Contractor with the required acceptance or action noted.

B. In providing review comments on schedule (and schedule document) submittals, and in this section, Contract Administrator may use the word “accepted”, “not accepted” or variations thereof in conveying its review comments to the Contractor. At any time, the “accepted” or similar wording is used, such wording shall have no different meaning than similar wording, such as “no exceptions taken.”

END OF SECTION

PART 1 GENERAL

1.01 SECTION INCLUDES

A. Submittals.

B. References and standards.

C. Testing and inspection agencies and services.

D. Control of installation.

E. Mock-ups.

F. Tolerances.

G. Manufacturers' field services.

H. Defect Assessment.

1.02 RELATED REQUIREMENTS

A. Section 00 6000 - General Conditions: Inspections and approvals required by public authorities.

B. Section 01 3000 - Administrative Requirements: Submittal procedures.

C. Section 01 6000 - Product Requirements: Requirements for material and product quality.

1.03 REFERENCE STANDARDS

A. ASTM C1021 - Standard Practice for Laboratories Engaged in Testing of Building Sealants; 2008 (Reapproved 2014).

B. ASTM C1077 - Standard Practice for Laboratories Testing Concrete and Concrete Aggregates for Use in Construction and Criteria for Laboratory Evaluation; 2014.

C. ASTM C1093 - Standard Practice for Accreditation of Testing Agencies for Masonry; 2013.

D. ASTM D3740 - Standard Practice for Minimum Requirements for Agencies Engaged in the Testing and/or Inspection of Soil and Rock as Used in Engineering Design and Construction; 2012a.

E. ASTM E329 - Standard Specification for Agencies Engaged in Construction Inspection, Testing, or Special Inspection; 2014a.

F. ASTM E543 - Standard Specification for Agencies Performing Nondestructive Testing; 2013.

G. OSSC - Oregon Structural Specialty Code, latest edition.

1.04 SUBMITTALS

A. See Section 01 3000 - Administrative Requirements, for submittal procedures.

B. Design Data: Submit for Consultant's knowledge as contract administrator for the limited purpose of assessing conformance with information given and the design concept expressed in the contract documents, or for Owner's information.

C. Test Reports: After each test/inspection, promptly submit two copies of report to Consultant and to Contractor.

1. Include:

a. Date issued.

b. Project title and number.

c. Name of inspector.

d. Date and time of sampling or inspection.

e. Identification of product and specifications section.

f. Location in the Project.

g. Type of test/inspection.

h. Date of test/inspection.

i. Results of test/inspection.

j. Conformance with Contract Documents.

k. When requested by Consultant, provide interpretation of results.

2. Test report submittals are for Consultant's knowledge as contract administrator for the limited purpose of assessing conformance with information given and the design concept expressed in the contract documents, or for Owner's information.

D. Certificates: When specified in individual specification sections, submit certification by the manufacturer and Contractor or installation/application subcontractor to Consultant, in quantities specified for Product Data.

1. Indicate material or product conforms to or exceeds specified requirements. Submit supporting reference data, affidavits, and certifications as appropriate.

2. Certificates may be recent or previous test results on material or product, but must be acceptable to Consultant.

E. Manufacturer's Instructions: When specified in individual specification sections, submit printed instructions for delivery, storage, assembly, installation, start-up, adjusting, and finishing, for the Owner's information. Indicate special procedures, perimeter conditions requiring special attention, and special environmental criteria required for application or installation.

F. Manufacturer's Field Reports: Submit reports for Consultant's benefit as contract administrator or for Owner.

1. Submit for information for the limited purpose of assessing conformance with information given and the design concept expressed in the contract documents.

G. Erection Drawings: Submit drawings for Consultant's benefit as contract administrator or for Owner.

1. Submit for information for the limited purpose of assessing conformance with information given and the design concept expressed in the contract documents.

2. Data indicating inappropriate or unacceptable Work may be subject to action by Consultant or Owner.

1.05 REFERENCES AND STANDARDS

A. For products and workmanship specified by reference to a document or documents not included in the Project Manual, also referred to as reference standards, comply with requirements of the standard, except when more rigid requirements are specified or are required by applicable codes.

B. Conform to reference standard of date of issue current on date of Contract Documents, except where a specific date is established by applicable code.

C. Obtain copies of standards where required by product specification sections.

D. Maintain copy at project site during submittals, planning, and progress of the specific work, until Substantial Completion.

E. Should specified reference standards conflict with Contract Documents, request clarification from Consultant before proceeding.

F. Neither the contractual relationships, duties, or responsibilities of the parties in Contract nor those of Consultant shall be altered from the Contract Documents by mention or inference otherwise in any reference document.

1.06 TESTING AND INSPECTION AGENCIES AND SERVICES

A. Owner will employ and pay for services of an independent testing agency to perform other specified testing.

B. Employment of agency in no way relieves Contractor of obligation to perform Work in accordance with requirements of Contract Documents.

PART 2 PRODUCTS - NOT USED

PART 3 EXECUTION

3.01 CONTROL OF INSTALLATION

A. Monitor quality control over suppliers, manufacturers, products, services, site conditions, and workmanship, to produce Work of specified quality.

B. Comply with manufacturers' instructions, including each step in sequence.

C. Should manufacturers' instructions conflict with Contract Documents, request clarification from Consultant before proceeding.

D. Comply with specified standards as minimum quality for the Work except where more stringent tolerances, codes, or specified requirements indicate higher standards or more precise workmanship.

E. Have Work performed by persons qualified to produce required and specified quality.

F. Verify that field measurements are as indicated on shop drawings or as instructed by the manufacturer.

G. Secure products in place with positive anchorage devices designed and sized to withstand stresses, vibration, physical distortion, and disfigurement.

3.02 MOCK-UPS

A. Before installing portions of the Work where mock-ups are required, construct mock-ups in location and size indicated for each form of construction and finish required to comply with the following requirements, using materials indicated for the completed Work. The purpose of mock-up is to demonstrate the proposed range of aesthetic effects and workmanship.

B. Accepted mock-ups establish the standard of quality the Consultant will use to judge the Work.

C. Integrated Exterior Mock-ups: construct integrated exterior mock-up as indicated on Drawings. Coordinate installation of exterior envelope materials and products as required in individual Specification Sections. Provide adequate supporting structure for mock-up materials as necessary.

D. Notify Consultant fifteen (15) working days in advance of dates and times when mockups will be constructed.

E. Provide supervisory personnel who will oversee mock-up construction. Provide workers that will be employed during the construction at Project.

F. Tests shall be performed under provisions identified in this section and identified in the respective product specification sections.

G. Assemble and erect specified items with specified attachment and anchorage devices, flashings, seals, and finishes.

H. Obtain Consultant's approval of mock-ups before starting work, fabrication, or construction.

I. Accepted mock-ups shall be a comparison standard for the remaining Work.

J. Where mock-up has been accepted by Consultant and is specified in product specification sections to be removed, protect mock-up throughout construction, remove mock-up and clear area when directed to do so by Consultant.

K. Where possible salvage and recycle the demolished mock-up materials.

3.03 TOLERANCES

A. Monitor fabrication and installation tolerance control of products to produce acceptable Work. Do not permit tolerances to accumulate.

B. Comply with manufacturers' tolerances. Should manufacturers' tolerances conflict with Contract Documents, request clarification from Consultant before proceeding.

C. Adjust products to appropriate dimensions; position before securing products in place.

3.04 TESTING AND INSPECTION

A. See individual specification sections and the current building code for testing and inspection required.

B. Testing Agency Duties:

1. Provide qualified personnel at site. Cooperate with Consultant and Contractor in performance of services.

2. Perform specified sampling and testing of products in accordance with specified standards.

3. Ascertain compliance of materials and mixes with requirements of Contract Documents.

4. Promptly notify Consultant and Contractor of observed irregularities or non-conformance of Work or products.

5. Perform additional tests and inspections required by Consultant.

6. Submit reports of all tests/inspections specified.

C. Limits on Testing/Inspection Agency Authority:

1. Agency may not release, revoke, alter, or enlarge on requirements of Contract Documents.

2. Agency may not approve or accept any portion of the Work.

3. Agency may not assume any duties of Contractor.

4. Agency has no authority to stop the Work.

D. Contractor Responsibilities:

1. Deliver to agency at designated location, adequate samples of materials proposed to be used that require testing, along with proposed mix designs.

2. Cooperate with laboratory personnel, and provide access to the Work and to manufacturers' facilities.

3. Provide incidental labor and facilities:

a. To provide access to Work to be tested/inspected.

b. To obtain and handle samples at the site or at source of Products to be tested/inspected.

c. To facilitate tests/inspections.

d. To provide storage and curing of test samples.

4. Notify Consultant and laboratory 24 hours prior to expected time for operations requiring testing/inspection services.

5. Employ services of an independent qualified testing laboratory and pay for additional samples, tests, and inspections required by Contractor beyond specified requirements.

6. Arrange with Owner's agency and pay for additional samples, tests, and inspections required by Contractor beyond specified requirements.

E. Re-testing required because of non-conformance to specified requirements shall be performed by the same agency on instructions by Consultant.

F. Re-testing required because of non-conformance to specified requirements shall be paid for by Contractor. Payment for re testing will be charged to the Contractor by deducting testing charges from the Contract Price.

3.05 MANUFACTURERS' FIELD SERVICES

A. When specified in individual specification sections, require material or product suppliers or manufacturers to provide qualified staff personnel to observe site conditions, conditions of surfaces and installation, quality of workmanship, start-up of equipment, test, adjust and balance of equipment as applicable, and to initiate instructions when necessary.

B. Submit qualifications of observer to Consultant 30 days in advance of required observations.

1. Observer subject to approval of Consultant.

2. Observer subject to approval of Owner.

C. Report observations and site decisions or instructions given to applicators or installers that are supplemental or contrary to manufacturers' written instructions.

3.06 DEFECT ASSESSMENT

A. Replace Work or portions of the Work not conforming to specified requirements.

END OF SECTION

PART 1 GENERAL

1.01 SECTION INCLUDES

A. Temporary telecommunications services.

B. Temporary sanitary facilities.

C. Temporary Controls: Barriers, enclosures, and fencing.

D. Security requirements.

E. Vehicular access and parking.

F. Waste removal facilities and services.

G. Project identification sign.

H. Field offices.

1.02 RELATED REQUIREMENTS

A. Section 01 5100 - Temporary Utilities.

1.03 REFERENCE STANDARDS

A. ASTM E84 - Standard Test Method for Surface Burning Characteristics of Building Materials; 2015a.

1.04 TELECOMMUNICATIONS SERVICES

A. Provide, maintain, and pay for telecommunications services to field office at time of project mobilization.

B. Telecommunications services shall include:

1. Windows-based personal computer dedicated to project telecommunications, with necessary software and laser printer.

2. Telephone Land Lines: One line, minimum; one handset per line.

   a. Cell phone service with voice mail for the project superintendent is an acceptable alternative to a fixed telephone device for this project.

3. Internet Connections: Minimum of one; DSL modem or faster.

4. Email: Account/address reserved for project use.

5. Facsimile Service: Minimum of one dedicated fax machine/printer, with dedicated phone line.

   a. This service may reside at the Contractor's office for this project if someone in the office can regularly check the device for messages.

C. Provide a digital camera at the site capable of taking pictures of job conditions and sending.jpg images via e-mail to Owner and Architect.

1.05 TEMPORARY SANITARY FACILITIES

A. Provide and maintain required facilities and enclosures. Provide at time of project mobilization.

B. Maintain daily in clean and sanitary condition.

1.06 BARRIERS

A. Provide barriers to protect workers on the site and the public against injury.

B. Provide barriers to prevent unauthorized entry to construction areas, to prevent access to areas that could be hazardous to workers or the public, to allow for owner's use of site and to protect existing facilities and adjacent properties from damage from construction operations and demolition.

C. Provide barricades and covered walkways required by governing authorities for public rights-of-way and for public access to existing building.

D. Provide protection for plants designated to remain. Replace damaged plants.

E. Protect non-owned vehicular traffic, stored materials, site, and structures from damage.

F. Traffic Controls: Provide as required to maintain safe working environment for Owner and Contractor personnel using the site.

1.07 TEMPORARY FIRE PROTECTION

A. Provide and maintain necessary facilities and equipment to safeguard Project against Fire Damage.

1.08 FENCING

A. Provide 6 foot high fence around construction site; equip with vehicular and pedestrian gates with locks.

1.09 EXTERIOR ENCLOSURES

A. Provide temporary insulated weather tight closure of exterior openings to accommodate acceptable working conditions and protection for Products, to allow for temporary heating and maintenance of required ambient temperatures identified in individual specification sections, and to prevent entry of unauthorized persons. Provide access doors with self-closing hardware and locks.

1.10 INTERIOR ENCLOSURES

A. Provide temporary partitions and ceilings as indicated to separate work areas from Owner-occupied areas, to prevent penetration of dust and moisture into Owner-occupied areas, and to prevent damage to existing materials and equipment.

B. Construction: Framing and reinforced polyethylene sheet materials with closed joints and sealed edges at intersections with existing surfaces:

1. Maximum flame spread rating of 75 in accordance with ASTM E84.

1.11 SECURITY

A. Provide security and facilities to protect Work, existing facilities, and Owner's operations from unauthorized entry, vandalism, or theft.

B. Coordinate with Owner's security program.

1.12 VEHICULAR ACCESS AND PARKING

A. Comply with regulations relating to use of streets and sidewalks, access to emergency facilities, and access for emergency vehicles.

B. Coordinate access and haul routes with governing authorities and Owner.

C. Provide and maintain access to fire hydrants, free of obstructions.

D. Provide means of removing mud from vehicle wheels before entering streets.

E. Designated existing on-site roads may be used for construction traffic.

F. Provide temporary parking areas to accommodate construction personnel. When site space is not adequate, provide additional off-site parking.

G. Existing parking areas may be used for construction parking.

H. Do not allow vehicle parking on existing pavement.

I. Use designated drop off and delivery areas for short term parking only.

J. Do not use Owner's Parking Lots for overnight vehicle storage.

K. Designate one parking space for Owner and Architect use.

L. Repair existing facilities damaged by use, to original condition.

M. Provide trained and equipped flag persons to regulate traffic when construction operations or traffic encroach on public traffic lanes.

1.13 MATERIAL STORAGE SPACE

A. Maintain within Project Limits in accordance with Architect's and Owner's instructions. Do not block exitways or overload structure.

1.14 WASTE REMOVAL

A. See Section 01 7419 - Construction Waste Management and Disposal, for additional requirements.

B. Encourage the separation of waste materials and sorting and disposal at a local recycling center.

C. Provide waste removal facilities and services as required to maintain the site in clean and orderly condition.

D. Provide containers with lids. Remove trash from site periodically.

E. If materials to be recycled or re-used on the project must be stored on-site, provide suitable non-combustible containers; locate containers holding flammable material outside the structure unless otherwise approved by the authorities having jurisdiction.

F. Open free-fall chutes are not permitted. Terminate closed chutes into appropriate containers with lids.

1.15 PROJECT IDENTIFICATION

A. A project sign is not required for this project.

B. No other signs are allowed without Owner permission except those required by law.

1.16 FIELD OFFICES

A. Office: Weathertight, with lighting, electrical outlets, heating, cooling equipment, and equipped with sturdy furniture and storage space for drawings and all project documents.

B. Provide space for Project meetings, with table and chairs to accommodate 8 persons.

C. Provide office within 15 days from Notice to Proceed, maintain, and remove prior to Substantial Completion or as agreed by Owner.

D. Contractor shall provide a field office, minimum 8’x20’ for Owners Rep: Weathertight, with lighting, electrical outlets, internet, heating, cooling equipment, and equipped with sturdy furniture and storage space for drawings and all project documents. Provide separate keyed lock.

1. Provide space for Project meetings, with table and chairs to accommodate 8 persons.

2. Provide office within 15 days from Notice to Proceed, maintain, and remove prior to Substantial Completion or as agreed by Owner.

3. Provide Utilities: power and internet.

1.17 VISITOR PERSONAL PROTECTION EQUIPMENT

A. Provide six sets of Personal Protection Equipment (PPE) for use by official visitors to the project site during construction. Visitor PPE shall include as a minimum, hard hat and protective eye goggles. Provide high visibility garments when moving vehicles are in use on the construction site. Store in Field Office and reserve for use by visitors to the project site.

B. Maintain in good condition through the course of the project and replace equipment that does not meet personal safety requirements.

1.18 REMOVAL OF UTILITIES, FACILITIES, AND CONTROLS

A. Remove temporary utilities, equipment, facilities, materials, prior to Date of Substantial Completion inspection.

B. Remove underground installations to a minimum depth of 2 feet. Grade site as indicated.

C. Clean and repair damage caused by installation or use of temporary work.

D. Restore existing facilities used during construction to original condition.

E. Restore new permanent facilities used during construction to specified condition.

PART 2 PRODUCTS - NOT USED

PART 3 EXECUTION - NOT USED

END OF SECTION

PART 1 GENERAL

1.01 SECTION INCLUDES

A. Temporary Utilities: Electricity, lighting, heat, ventilation, and water.

1.02 RELATED REQUIREMENTS

A. Section 01 5000 - Temporary Facilities and Controls:

1. Temporary telecommunications services for administrative purposes.

2. Temporary sanitary facilities required by law.

1.03 CONSERVATION

A. It is the Owner's practice to utilize natural resources responsibly. Exercise appropriate energy and water conservation measures at all times.

1.04 TEMPORARY ELECTRICITY

A. Cost of Labor, Material and Energy: By Contractor.

B. Provide power service required from utility source.

C. Provide power outlets for construction operations, with branch wiring and distribution boxes located at each floor. Provide flexible power cords as required.

D. Provide main service disconnect and over-current protection at convenient location and meter.

E. Permanent convenience receptacles may be utilized during construction.

F. Provide adequate distribution equipment, wiring, and outlets to provide single phase branch circuits for power and lighting.

1.05 TEMPORARY LIGHTING FOR CONSTRUCTION PURPOSES

A. Provide and maintain incandescent lighting for construction operations to achieve a minimum lighting level of 2 watt/sq ft.

B. Provide and maintain 1 watt/sq ft lighting to exterior staging and storage areas after dark for security purposes.

C. Provide and maintain 0.25 watt/sq ft H.I.D. lighting to interior work areas after dark for security purposes.

D. Provide branch wiring from power source to distribution boxes with lighting conductors, pigtails, and lamps as required.

E. Maintain lighting and provide routine repairs.

F. Permanent building lighting may be utilized during construction.

1.06 TEMPORARY HEATING

A. Cost of of Labor, Material and Energy: By Contractor.

B. Provide heating devices and heat as needed to maintain specified conditions for construction operations.

C. Maintain minimum ambient temperature of 50 degrees F in areas where construction is in progress, unless indicated otherwise in specifications.

1.07 TEMPORARY COOLING

A. Provide cooling devices and cooling as needed to maintain specified conditions for construction operations.

B. Maintain maximum ambient temperature of 80 degrees F in areas where construction is in progress, unless indicated otherwise in specifications.

1.08 TEMPORARY VENTILATION

A. Existing ventilation equipment may not be used.

1.09 TEMPORARY WATER SERVICE

A. Cost of Labor, Materials, and Water Used: By Contractor.

B. Provide and maintain suitable quality water service for construction operations at time of project mobilization.

C. Connect to existing water source.

1. Exercise measures to conserve water.

D. Extend branch piping with outlets located so water is available by hoses with threaded connections. Provide temporary pipe insulation to prevent freezing.

PART 2 PRODUCTS - NOT USED

PART 3 EXECUTION - NOT USED

END OF SECTION

PART 1 GENERAL

1.01 SECTION INCLUDES

A. Prevention of erosion due to construction activities.

B. Prevention of sedimentation of waterways, open drainage ways, and storm and sanitary sewers due to construction activities.

C. Restoration of areas eroded due to insufficient preventive measures.

D. Compensation of Owner for fines levied by authorities having jurisdiction due to non-compliance by Contractor.

1.02 REFERENCE STANDARDS

A. ASTM D4355 - Standard Test Method for Deterioration of Geotextiles by Exposure to Light, Moisture, and Heat in a Xenon Arc Type Apparatus; 2007.

B. ASTM D4491 - Standard Test Methods for Water Permeability of Geotextiles by Permittivity; 1999a (Reapproved 2014).

C. ASTM D4533 - Standard Test Method for Trapezoid Tearing Strength of Geotextiles; 2011.

D. ASTM D4632/D4632M - Standard Test Method for Grab Breaking Load and Elongation of Geotextiles; 2015a.

E. ASTM D4751 - Standard Test Method for Determining Apparent Opening Size of a Geotextile; 2012.

F. ASTM D4873 - Standard Guide for Identification, Storage, and Handling of Geosynthetic Rolls and Samples; 2002 (Reapproved 2009).

1.03 PERFORMANCE REQUIREMENTS

A. Comply with all requirements of state and local jurisdictions for erosion and sedimentation control.

B. Develop and follow an Erosion and Sedimentation Prevention Plan and submit periodic inspection reports.

C. Do not begin clearing, grading, or other work involving disturbance of ground surface cover until applicable permits have been obtained; furnish all documentation required to obtain applicable permits.

1. An erosion control permit is required. The Owner shall apply, pay for, and secure the permit. The contractor shall comply with the construction erosion control permit.

2. Owner will withhold payment to Contractor equivalent to all fines resulting from non-compliance with applicable regulations.

D. Timing: Put preventive measures in place as soon as possible after disturbance of surface cover and before precipitation occurs.

E. Storm Water Runoff: Control increased storm water runoff due to disturbance of surface cover due to construction activities for this project.

1. Prevent runoff into storm and sanitary sewer systems, including open drainage channels, in excess of actual capacity or amount allowed by authorities having jurisdiction, whichever is less.

2. Anticipate runoff volume due to the most extreme short term and 24-hour rainfall events that might occur in 25 years.

F. Erosion On Site: Minimize wind, water, and vehicular erosion of soil on project site due to construction activities for this project.

1. Control movement of sediment and soil from temporary stockpiles of soil.

2. Prevent development of ruts due to equipment and vehicular traffic.

3. If erosion occurs due to non-compliance with these requirements, restore eroded areas at no cost to Owner.

G. Erosion Off Site: Prevent erosion of soil and deposition of sediment on other properties caused by water leaving the project site due to construction activities for this project.

1. Prevent windblown soil from leaving the project site.

2. Prevent tracking of mud onto public roads outside site.

3. Prevent mud and sediment from flowing onto sidewalks and pavements.

4. If erosion occurs due to non-compliance with these requirements, restore eroded areas at no cost to Owner.

H. Sedimentation of Waterways On Site: Prevent sedimentation of waterways on the project site, including rivers, streams, lakes, ponds, open drainage ways, storm sewers, and sanitary sewers.

1. If sedimentation occurs, install or correct preventive measures immediately at no cost to Owner; remove deposited sediments; comply with requirements of authorities having jurisdiction.

2. If sediment basins are used as temporary preventive measures, pump dry and remove deposited sediment after each storm.

I. Sedimentation of Waterways Off Site: Prevent sedimentation of waterways off the project site, including rivers, streams, lakes, ponds, open drainage ways, storm sewers, and sanitary sewers.

1. If sedimentation occurs, install or correct preventive measures immediately at no cost to Owner; remove deposited sediments; comply with requirements of authorities having jurisdiction.

J. Open Water: Prevent standing water that could become stagnant.

K. Maintenance: Maintain temporary preventive measures until permanent measures have been established.

1.04 WORK INCLUDED BUT SPECIFIED ELSEWHERE

A. Erosion control products and construction work within any jurisdictional right-of-way shall conform to the requirments of that jurisdiction, in addition to the requirements herein and those shown on the private improvement drawings.

B. Erosion control products and construction work within the any jurisdictional right-of-way shall conform to the requirments of that jurisdiction, 1990 Standard Specifications for Public Works Construction published by the Oregon Chapter of APWA (Amended in 1996) and to the requirements herein and those shown on the private improvement drawings.

1.05 SUBMITTALS

A. See Section 01 3000 - Administrative Requirements, for submittal procedures.

B. Erosion and Sedimentation Control Plan:

1. Submit within 2 weeks after Notice to Proceed.

2. Include:

a. Site plan identifying soils and vegetation, existing erosion problems, and areas vulnerable to erosion due to topography, soils, vegetation, or drainage.

b. Site plan showing grading; new improvements; temporary roads, traffic accesses, and other temporary construction; and proposed preventive measures.

c. Where extensive areas of soil will be disturbed, include storm water flow and volume calculations, soil loss predictions, and proposed preventive measures.

d. Schedule of temporary preventive measures, in relation to ground disturbing activities.

e. Other information required by law.

f. Format required by law is acceptable, provided any additional information specified is also included.

3. Obtain the approval of the Plan by authorities having jurisdiction.

4. Obtain the approval of the Plan by Owner.

C. Certificate: Mill certificate for silt fence fabric attesting that fabric and factory seams comply with specified requirements, signed by legally authorized official of manufacturer; indicate actual minimum average roll values; identify fabric by roll identification numbers.

D. Inspection Reports: Submit report of each inspection; identify each preventive measure, indicate condition, and specify maintenance or repair required and accomplished.

PART 2 PRODUCTS

2.01 MATERIALS

A. Mulch: Use one of the following:

1. Straw or hay.
2. Wood waste, chips, or bark.
3. Erosion control matting or netting.
4. Polyethylene film, where specifically indicated only.

B. Grass Seed For Temporary Cover: Select a species appropriate to climate, planting season, and intended purpose. If same area will later be planted with permanent vegetation, do not use species known to be excessively competitive or prone to volunteer in subsequent seasons.

C. Bales: Air dry, rectangular straw bales.

1. Cross Section: 14 by 18 inches, minimum.
2. Bindings: Wire or string, around long dimension.

D. Bale Stakes: One of the following, minimum 3 feet long:

1. Steel U- or T-section, with minimum mass of 1.33 lb per linear foot.
2. Wood, 2 by 2 inches in cross section.

E. Silt Fence Fabric: Polypropylene geotextile resistant to common soil chemicals, mildew, and insects; non-biodegradable; in longest lengths possible; fabric including seams with the following minimum average roll lengths:

1. Average Opening Size: 30 U.S. Std. Sieve, maximum, when tested in accordance with ASTM D4751.
2. Permittivity: 0.05 sec^-1, minimum, when tested in accordance with ASTM D4491.
3. Ultraviolet Resistance: Retaining at least 70 percent of tensile strength, when tested in accordance with ASTM D4355 after 500 hours exposure.
4. Tensile Strength: 100 lb-f, minimum, in cross-machine direction; 124 lb-f, minimum, in machine direction; when tested in accordance with ASTM D4632/D4632M.
5. Elongation: 15 to 30 percent, when tested in accordance with ASTM D4632/D4632M.
6. Tear Strength: 55 lb-f, minimum, when tested in accordance with ASTM D4533.
7. Color: Manufacturer's standard, with embedment and fastener lines preprinted.

F. Silt Fence Posts: One of the following, minimum 5 feet long:

1. Softwood, 4 by 4 inches in cross section.

G. Gravel: See Section 32 1123 for aggregate.

PART 3 EXECUTION

3.01 EXAMINATION

A. Examine site and identify existing features that contribute to erosion resistance; maintain such existing features to greatest extent possible.

3.02 PREPARATION

A. Schedule work so that soil surfaces are left exposed for the minimum amount of time.

3.03 SCOPE OF PREVENTIVE MEASURES

A. In all cases, if permanent erosion resistant measures have been installed temporary preventive measures are not required.

B. Construction Entrances: Traffic-bearing aggregate surface.

1. Width: As required; 20 feet, minimum.

2. Length: 50 feet, minimum.

3. Provide at each construction entrance from public right-of-way and where noted on drawings.

4. Where necessary to prevent tracking of mud onto right-of-way, provide wheel washing area out of direct traffic lane, with drain into sediment trap or basin.

C. Linear Sediment Barriers: Made of silt fences.

1. Provide linear sediment barriers:

a. Along downhill perimeter edge of disturbed areas, including soil stockpiles.

2. Space sediment barriers with the following maximum slope length upslope from barrier:

a. Slope of Less Than 2 Percent: 100 feet..

b. Slope Between 2 and 5 Percent: 75 feet.

c. Slope Between 5 and 10 Percent: 50 feet.

d. Slope Between 10 and 20 Percent: 25 feet.

e. Slope Over 20 Percent: 15 feet.

D. Storm Drain Curb Inlet Sediment Trap: Protect each curb inlet using one of the following measures:

1. Filter fabric wrapped around hollow concrete blocks blocking entire inlet face area; use one piece of fabric wrapped at least 1-1/2 times around concrete blocks and secured to prevent dislodging; orient cores of blocks so runoff passes into inlet.

2. Straw bale row blocking entire inlet face area; anchor into pavement.

E. Storm Drain Drop Inlet Sediment Traps: As detailed on drawings.

F. Temporary Splash Pads: Stone aggregate over filter fabric; size to suit application; provide at downspout outlets and storm water outlets.

G. Soil Stockpiles: Protect using one of the following measures:

1. Cover with polyethylene film, secured by placing soil on outer edges.

2. Cover with mulch at least 4 inches thickness of pine needles, sawdust, bark, wood chips, or shredded leaves, or 6 inches of straw or hay.

H. Mulching: Use only for areas that may be subjected to erosion for less than 6 months.

1. Wood Waste: Use only on slopes 3:1 or flatter; no anchoring required.

I. Temporary Seeding: Use where temporary vegetated cover is required.

3.04 INSTALLATION

A. Traffic-Bearing Aggregate Surface:

1. Excavate minimum of 6 inches.

2. Place geotextile fabric full width and length, with minimum 12 inch overlap at joints.

3. Place and compact at least 6 inches of 1.5 to 3.5 inch diameter stone.

B. Silt Fences:

1. Store and handle fabric in accordance with ASTM D4873.

2. Where slope gradient is less than 3:1 or barriers will be in place less than 6 months, use nominal 16 inch high barriers with minimum 36 inch long posts spaced at 6 feet maximum, with fabric embedded at least 4 inches in ground.

3. Where slope gradient is steeper than 3:1 or barriers will be in place over 6 months, use nominal 28 inch high barriers, minimum 48 inch long posts spaced at 6 feet maximum, with fabric embedded at least 6 inches in ground.

4. Where slope gradient is steeper than 3:1 and vertical height of slope between barriers is more than 20 feet, use nominal 32 inch high barriers with woven wire reinforcement and steel posts spaced at 4 feet maximum, with fabric embedded at least 6 inches in ground.

5. Install with top of fabric at nominal height and embedment as specified.

6. Do not splice fabric width; minimize splices in fabric length; splice at post only, overlapping at least 18 inches, with extra post.

7. Fasten fabric to wood posts using one of the following:

a. Four nails per post with 3/4 inch diameter flat or button head, 1 inch long, and 14 gage, 0.083 inch shank diameter.

b. Five staples per post with at least 17 gage, 0.0453 inch wire, 3/4 inch crown width and 1/2 inch long legs.

8. Wherever runoff will flow around end of barrier or over the top, provide temporary splash pad or other outlet protection; at such outlets in the run of the barrier, make barrier not more than 12 inches high with post spacing not more than 4 feet.

C. Straw Bale Rows:

1. Install bales in continuous rows with ends butting tightly, with one bale at each end of row turned uphill.

2. Install bales so that bindings are not in contact with the ground.

3. Embed bales at least 4 inches in the ground.

4. Anchor bales with at least two stakes per bale, driven at least 18 inches into the ground; drive first stake in each bale toward the previously placed bale to force bales together.

5. Fill gaps between ends of bales with loose straw wedged tightly.

6. Place soil excavated for trench against bales on the upslope side of the row, compacted.

D. Mulching Over Large Areas:

1. Dry Straw and Hay: Apply 2-1/2 tons per acre; anchor using dull disc harrow or emulsified asphalt applied using same spraying machine at 100 gallons of water per ton of mulch.

2. Wood Waste: Apply 6 to 9 tons per acre.

3. Erosion Control Matting: Comply with manufacturer's instructions.

E. Mulching Over Small and Medium Areas:

1. Dry Straw and Hay: Apply 4 to 6 inches depth.

2. Wood Waste: Apply 2 to 3inches depth.

3. Erosion Control Matting: Comply with manufacturer's instructions.

F. Temporary Seeding:

1. When hydraulic seeder is used, seedbed preparation is not required.

2. When surface soil has been sealed by rainfall or consists of smooth undisturbed cut slopes, and conventional or manual seeding is to be used, prepare seedbed by scarifying sufficiently to allow seed to lodge and germinate.

3. If temporary mulching was used on planting area but not removed, apply nitrogen fertilizer at 1 pound per 1000 sq ft.

4. On soils of very low fertility, apply 10-10-10 fertilizer at rate of 12 to 16 pounds per 1000 sq ft.

5. Incorporate fertilizer into soil before seeding.

6. Apply seed uniformly; if using drill or cultipacker seeders place seed 1/2 to 1 inch deep.

7. Irrigate as required to thoroughly wet soil to depth that will ensure germination, without causing runoff or erosion.

8. Repeat irrigation as required until grass is established.

3.05 MAINTENANCE

A. Inspect preventive measures weekly, within 24 hours after the end of any storm that produces 0.5 inches or more rainfall at the project site, and daily during prolonged rainfall.

B. Repair deficiencies immediately.

C. Silt Fences:

1. Promptly replace fabric that deteriorates unless need for fence has passed.

2. Remove silt deposits that exceed one-third of the height of the fence.

3. Repair fences that are undercut by runoff or otherwise damaged, whether by runoff or other causes.

D. Straw Bale Rows:

1. Promptly replace bales that fall apart or otherwise deteriorate unless need has passed.

2. Remove silt deposits that exceed one-half of the height of the bales.

3. Repair bale rows that are undercut by runoff or otherwise damaged, whether by runoff or other causes.

E. Clean out temporary sediment control structures weekly and relocate soil on site.

F. Place sediment in appropriate locations on site; do not remove from site.

3.06 CLEAN UP

A. Remove temporary measures after permanent measures have been installed, unless permitted to remain by Architect.

B. Clean out temporary sediment control structures that are to remain as permanent measures.

C. Where removal of temporary measures would leave exposed soil, shape surface to an acceptable grade and finish to match adjacent ground surfaces.

END OF SECTION

PART 1 GENERAL

1.01 SECTION INCLUDES

A. Construction procedures to promote adequate indoor air quality after construction.

B. Building flush-out after construction and before occupancy.

C. Testing indoor air quality after completion of construction.

1.02 PROJECT GOALS

A. Dust and Airborne Particulates: Prevent deposition of dust and other particulates in HVAC ducts and equipment.

1. Cleaning of ductwork is not contemplated under this Contract.

2. Contractor shall bear the cost of cleaning required due to failure to protect ducts and equipment from construction dust.

B. Airborne Contaminants: Procedures and products have been specified to minimize indoor air pollutants.

1. Furnish products meeting the specifications.

2. Avoid construction practices that could result in contamination of installed products leading to indoor air pollution.

1.03 RELATED REQUIREMENTS

A. Section 01 4000 - Quality Requirements: Testing and inspection services.

B. Section 01 6116 - Volatile Organic Compound (VOC) Content Restrictions.

1.04 REFERENCE STANDARDS

A. ASTM D5197 - Standard Test Method for Determination of Formaldehyde and Other Carbonyl Compounds in Air (Active Sampler Methodology); 2009.

B. CAL (CDPH SM) - Standard Method for the Testing and Evaluation of Volatile Organic Chemical Emissions From Indoor Sources Using Environmental Chambers; California Department of Public Health; v1.1, 2010.

C. EPA 600/4-90/010 - Compendium of Methods for the Determination of Air Pollutants in Indoor Air; April 1990.

D. EPA 625/R-96/010b - Compendium of Methods for the Determination of Toxic Organic Compounds in Ambient Air; January 1999.

E. SMACNA (OCC) - IAQ Guidelines for Occupied Buildings Under Construction; 2007.

1.05 DEFINITIONS

A. Adsorptive Materials: Gypsum board, acoustical ceiling tile and panels, carpet and carpet tile, fabrics, fibrous insulation, and other similar products.

B. Contaminants: Gases, vapors, regulated pollutants, airborne mold and mildew, and the like, as specified.

C. Particulates: Dust, dirt, and other airborne solid matter.

D. Wet Work: Concrete, plaster, coatings, and other products that emit water vapor or volatile organic compounds during installation, drying, or curing.

1.06 SUBMITTALS

A. See Section 01 3000 - Administrative Requirements, for submittal procedures.

B. Indoor Air Quality Management Plan: Describe in detail measures to be taken to promote adequate indoor air quality upon completion; use SMACNA (OCC) as a guide.

1. Submit not less than 60 days before enclosure of building.
2. Identify potential sources of odor and dust.
3. Identify construction activities likely to produce odor or dust.
4. Identify areas of project potentially affected, especially occupied areas.
5. Evaluate potential problems by severity and describe methods of control.
6. Describe construction ventilation to be provided, including type and duration of ventilation, use of permanent HVAC systems, types of filters and schedule for replacement of filters.
7. Describe cleaning and dust control procedures.

C. Air Contaminant Test Plan: Identify:

1. Testing agency qualifications.
2. Locations and scheduling of air sampling.
3. Test procedures, in detail.
4. Test instruments and apparatus.
5. Sampling methods.

D. Air Contaminant Test Reports: Show:

1. Location where each sample was taken, and time.
2. Test values for each air sample; average the values of each set of 3.
3. HVAC operating conditions.
4. Certification of test equipment calibration.
5. Other conditions or discrepancies that might have influenced results.

PART 2 PRODUCTS

2.01 MATERIALS

A. Low VOC Materials: See Section 01 6116.

B. Low VOC Materials: See individual sections for specific requirements for materials with low VOC content.

PART 3 EXECUTION

3.01 CONSTRUCTION PROCEDURES

A. Prevent the absorption of moisture and humidity by adsorptive materials by:

1. Sequencing the delivery of such materials so that they are not present in the building until wet work is completed and dry.

2. Delivery and storage of such materials in fully sealed moisture-impermeable packaging.

3. Provide sufficient ventilation for drying within reasonable time frame.

B. Begin construction ventilation when building is substantially enclosed.

C. If extremely dusty or dirty work must be conducted inside the building, shut down HVAC systems for the duration; remove dust and dirt completely before restarting systems.

D. HVAC equipment and ductwork may NOT be used for ventilation during construction:

1. Provide temporary ventilation equivalent to 1.5 air changes per hour, minimum.

2. Exhaust directly to outside.

3. Seal HVAC air inlets and outlets immediately after duct installation.

E. Do not store construction materials or waste in mechanical or electrical rooms.

F. Prior to use of return air ductwork without intake filters clean up and remove dust and debris generated by construction activities.

1. Inspect duct intakes, return air grilles, and terminal units for dust.

2. Clean plenum spaces, including top sides of lay-in ceilings, outsides of ducts, tops of pipes and conduit.

3. Clean tops of doors and frames.

4. Clean mechanical and electrical rooms, including tops of pipes, ducts, and conduit, equipment, and supports.

5. Clean return plenums of air handling units.

6. Remove intake filters last, after cleaning is complete.

G. Do not perform dusty or dirty work after starting use of return air ducts without intake filters.

H. Use other relevant recommendations of SMACNA (OCC) for avoiding unnecessary contamination due to construction procedures.

3.02 BUILDING FLUSH-OUT

A. Contractor's Option: Either full continuous flush-out OR satisfactory air contaminant testing is required, not both.

B. Perform building flush-out before occupancy.

C. Do not start flush-out until:

1. All construction is complete.

2. HVAC systems have been tested, adjusted, and balanced for proper operation.

3. Inspection of inside of return air ducts and terminal units confirms that cleaning is not necessary.

4. New HVAC filtration media have been installed.

D. Building Flush-Out: Operate all ventilation systems at normal flow rates with 100 percent outside air until a total air volume of 14,000 cubic feet per square foot of floor area has been supplied.

1. Obtain Owner's concurrence that construction is complete enough before beginning flush-out.

2. Maintain interior temperature of at least 60 degrees F and interior relative humidity no higher than 60 percent.

3. If additional construction involving materials that produce particulates or any of the specified contaminants is conducted during flush-out, start flush-out over.

4. If interior spaces must be occupied prior to completion of the flush-out, supply a minimum of 25 percent of the total air volume prior to occupancy, and:

a. Begin ventilation at least three hours prior to daily occupancy.

b. Continue ventilation during all occupied periods.

c. Provide minimum outside air volume of 0.30 cfm per square foot or design minimum outside air rate, whichever is greater.

E. Install new HVAC filtration media after completion of flush-out and before occupancy or further testing.

3.03 AIR CONTAMINANT TESTING

A. Contractor's Option: Either full continuous flush-out OR satisfactory air contaminant testing is required, not both.

B. Perform air contaminant testing before occupancy.

C. Do not start air contaminant testing until:

1. All construction is complete, including interior finishes.

2. HVAC systems have been tested, adjusted, and balanced for proper operation.

3. New HVAC filtration media have been installed.

D. Indoor Air Samples: Collect from spaces representative of occupied areas:

1. Collect samples while operable windows and exterior doors are closed, HVAC system is running normally as if occupied, with design minimum outdoor air, but with the building unoccupied.

2. Collect samples from spaces in each contiguous floor area in each air handler zone, but not less than one sample per 25,000 square feet; take samples from areas having the least ventilation and those having the greatest presumed source strength.

3. Collect samples from height from 36 inches to 72 inches above floor.

4. Collect samples from same locations on 3 consecutive days during normal business hours; average the results of each set of 3 samples.

5. Exception: Areas with normal very high outside air ventilation rates, such as laboratories, do not need to be tested.

6. When retesting the same building areas, take samples from at least the same locations as in first test.

E. Outdoor Air Samples: Collect samples at outside air intake of each air handler at the same time as indoor samples are taken.

F. Analyze air samples and submit report.

G. Air Contaminant Concentration Limits:

1. Formaldehyde: Not more than 27 parts per billion.

2. PM10 Particulates: Not more than 50 micrograms per cubic meter.

3. Total Volatile Organic Compounds (TVOCs): Not more than 500 micrograms per cubic meter.

4. Chemicals Listed in CAL (CDPH SM) Table 4-1, except Formaldehyde: Allowable concentrations listed in Table 4-1.

5. Carbon Monoxide: Not more than 9 parts per million and not more than 2 parts per million higher than outdoor air.

H. Air Contaminant Concentration Test Methods:

1. Formaldehyde: ASTM D5197, EPA 625 Method TO-11A, or EPA 600 Method IP-6.

2. Particulates: EPA 600 Method IP-10.

3. Total Volatile Organic Compounds (TVOC): EPA 625 Method TO-1, TO-15, or TO-17; or EPA 600 Method IP-1.

4. Chemicals Listed in CAL (CDPH SM) Table 4-1, except Formaldehyde: ASTM D5197, or EPA 625 Method TO-1, TO-15, or TO-17.

5. Carbon Monoxide: EPA 600 Method IP-3, plus measure outdoor air; measure in ppm; report both indoor and outdoor measurements.

I. Air Contaminant Concentration Determination and Limits:

1. Carbon Monoxide: Not more than 9 parts per million and not more than 2 parts per million higher than outdoor air.

2. Airborne Mold and Mildew: Measure in relation to outside air; not higher than outside air.

3. Formaldehyde: Not more than 50 parts per billion.

4. Formaldehyde: Measure in micrograms per cubic meter, in relation to outside air; not more than 20 micrograms per cubic meter higher than outside air.

5. Total Volatile Organic Compounds (TVOC): Not more than 500 micrograms per cubic meter.

6. Total Volatile Organic Compounds (TVOC): Measure in micrograms per cubic meter, in relation to outside air; not more than 200 micrograms per cubic meter higher than outside air.

7. Particulates (PM10): Not more than 50 micrograms per cubic meter.

8. Total Particulates (PM): Measure in micrograms per cubic meter, in relation to outside air; not more than 20 micrograms per cubic meter higher than outside air.

END OF SECTION

PART 1 GENERAL

1.01 SECTION INCLUDES

A. General product requirements.

B. Re-use of existing products.

C. Transportation, handling, storage and protection.

D. Product option requirements.

E. Substitution limitations and procedures.

F. Procedures for Owner-supplied products.

G. Maintenance materials, including extra materials, spare parts, tools, and software.

1.02 RELATED REQUIREMENTS

A. Document 00 2113 - Instructions to Bidders: Product options and substitution procedures prior to bid date.

B. Section 01 4000 - Quality Requirements: Product quality monitoring.

C. Section 01 6023 - Substitution Request Form

D. Section 01 6116 - Volatile Organic Compound (VOC) Content Restrictions: Requirements for VOC-restricted product categories.

E. Section 01 7419 - Construction Waste Management and Disposal: Waste disposal requirements potentially affecting packaging and substitutions.

1.03 REFERENCE STANDARDS

A. GEI (SCH) - GREENGUARD "Children and Schools" Certified Products; GREENGUARD Environmental Institute; current listings at www.greenguard.org.

B. GreenSeal GS-36 - Commercial Adhesives; Green Seal, Inc.; 2000.

C. SCAQMD 1168 - South Coast Air Quality Management District Rule No.1168; current edition; www.aqmd.gov

1.04 SUBMITTALS

A. Proposed Products List: Submit list of major products that comply with the specifications and are proposed for use, with name of manufacturer, trade name, and model number of each product.

1. Submit within 15 days after date of Subcontract Award Notice.

2. For products specified only by reference standards, list applicable reference standards.

B. Product Data Submittals: Submit manufacturer's standard published data. Mark each copy to identify applicable products, models, options, and other data. Supplement manufacturers' standard data to provide information specific to this Project.

C. Shop Drawing Submittals: Prepared specifically for this Project; indicate utility and electrical characteristics, utility connection requirements, and location of utility outlets for service for functional equipment and appliances.

D. Sample Submittals: Illustrate functional and aesthetic characteristics of the product, with integral parts and attachment devices. Coordinate sample submittals for interfacing work.

1. For selection from standard finishes, submit samples of the full range of the manufacturer's standard colors, textures, and patterns.

PART 2 PRODUCTS

2.01 EXISTING PRODUCTS

A. Do not use materials and equipment removed from existing premises unless specifically required or permitted by the Contract Documents.

B. Unforeseen historic items encountered remain the property of the Owner; notify Owner promptly upon discovery; protect, remove, handle, and store as directed by Owner.

C. Existing materials and equipment indicated to be removed, but not to be re-used, relocated, reinstalled, delivered to the Owner, or otherwise indicated as to remain the property of the Owner, become the property of the Contractor; remove from site.

D. Reused Products: Reused products include materials and equipment previously used in this or other construction, salvaged and refurbished as specified.

2.02 NEW PRODUCTS

A. Provide new products unless specifically required or permitted by the Contract Documents.

2.03 PRODUCT OPTIONS

A. Products Specified by Reference Standards or by Description Only: Use any product meeting those standards or description.

B. Products Specified by Naming One or More Manufacturers: Use a product of one of the manufacturers named and meeting specifications, no options or substitutions allowed.

C. Products Specified by Naming One or More Manufacturers with a Provision for Substitutions: Submit a request for substitution for any manufacturer not named.

2.04 MAINTENANCE MATERIALS

A. Furnish extra materials, spare parts, tools, and software of types and in quantities specified in individual specification sections.

PART 3 EXECUTION

3.01 SUBSTITUTION PROCEDURES

A. Instructions to Bidders specifies process and time restrictions for submitting requests for substitutions during the bidding period. Comply with requirements specified in that section.

B. Substitutions may be considered when a product becomes unavailable through no fault of the Contractor.

C. Document each request on Form 01-6023 with complete data substantiating compliance of proposed substitution with Contract Documents. **Include a point by point comparative analysis in matrix form.**

D. Substitutions

1. Notify Architect when Contractor is aware of materials, equipment, or products that meet the aesthetic and programmatic intent of Contract Documents, but which are more environmentally responsible than materials, equipment, or products specified or indicated in the Contract Documents.

E. A request for substitution constitutes a representation that the submitter:

1. Has investigated proposed product and determined that it meets or exceeds the quality level of the specified product.

2. Agrees to provide the same warranty for the substitution as for the specified product.

3. Agrees to coordinate installation and make changes to other Work that may be required for the Work to be complete with no additional cost to Owner.

4. Waives claims for additional costs or time extension that may subsequently become apparent.

F. Substitutions will not be allowed post bid.

G. Each request for substitution approval shall include:

1. Identity of Product for which substitution is requested; include Specification Section.

2. Identity of substitution; include complete Product description, drawings, photographs, performance and test data, and any other information necessary for evaluation.

3. ~~Identify compliance with any described LEED product requirements~~.

4. Quality comparison of proposed substitution with specified product.

5. Changes in other Work required because of substitution.

6. Effect on construction progress schedule.

7. Cost of proposed substitution compared with specified product.

8. Any required license fees or royalties.

9. Availability of maintenance service.

10. Source of replacement materials.

H. Architect will be sole judge of acceptability of any proposed substitution.

3.02 SUBSTITUTIONS AFTER CONTRACT AWARD

A. Approval will be granted only when:

1. Specified Product cannot be delivered without Project delay, or
2. Specified Product has been discontinued, or
3. Specified Product has been replaced by superior Product, or
4. Specified Product cannot be guaranteed as specified, or
5. Specified Product will not perform properly, or
6. Specified Product will not fit within designated space, or
7. Specified Product does not comply with governing codes, or
8. Substitution will be clearly in Owner's interest.

B. Architect will issue Change Order authorizing approved substitutions and revising Contract Sum where appropriate.

3.03 CONTRACT COMPLIANCE

A. Substitution approval does not relieve Contractor from responsibility for proper execution of the Work and for compliance with other Contract requirements.

3.04 OWNER-SUPPLIED PRODUCTS

A. See Section 01 1000 for identification of Owner-supplied products.

B. Owner's Responsibilities:

1. Arrange for and deliver Owner reviewed shop drawings, product data, and samples, to Contractor.
2. Arrange and pay for product delivery to site.
3. On delivery, inspect products jointly with Contractor.
4. Submit claims for transportation damage and replace damaged, defective, or deficient items.
5. Arrange for manufacturers' warranties, inspections, and service.

C. Contractor's Responsibilities:

1. Review Owner reviewed shop drawings, product data, and samples.

2. Receive and unload products at site; inspect for completeness or damage jointly with Owner.

3. Handle, store, install and finish products.

4. Repair or replace items damaged after receipt.

3.05 TRANSPORTATION AND HANDLING

A. Package products for shipment in manner to prevent damage; for equipment, package to avoid loss of factory calibration.

B. If special precautions are required, attach instructions prominently and legibly on outside of packaging.

C. Coordinate schedule of product delivery to designated prepared areas in order to minimize site storage time and potential damage to stored materials.

D. Transport and handle products in accordance with manufacturer's instructions.

E. Transport materials in covered trucks to prevent contamination of product and littering of surrounding areas.

F. Promptly inspect shipments to ensure that products comply with requirements, quantities are correct, and products are undamaged.

G. Provide equipment and personnel to handle products by methods to prevent soiling, disfigurement, or damage, and to minimize handling.

H. Arrange for the return of packing materials, such as wood pallets, where economically feasible.

3.06 STORAGE AND PROTECTION

A. Designate receiving/storage areas for incoming products so that they are delivered according to installation schedule and placed convenient to work area in order to minimize waste due to excessive materials handling and misapplication.

B. Store and protect products in accordance with manufacturers' instructions.

C. Store with seals and labels intact and legible.

D. Store sensitive products in weather tight, climate controlled, enclosures in an environment favorable to product.

E. For exterior storage of fabricated products, place on sloped supports above ground.

F. Protect products from damage or deterioration due to construction operations, weather, precipitation, humidity, temperature, sunlight and ultraviolet light, dirt, dust, and other contaminants.

G. Comply with manufacturer's warranty conditions, if any.

H. Cover products subject to deterioration with impervious sheet covering. Provide ventilation to prevent condensation and degradation of products.

I. Prevent contact with material that may cause corrosion, discoloration, or staining.

J. Provide equipment and personnel to store products by methods to prevent soiling, disfigurement, or damage.

K. Arrange storage of products to permit access for inspection. Periodically inspect to verify products are undamaged and are maintained in acceptable condition.

END OF SECTION

SUBSTITUTION REQUEST: DATE SUBMITTED _____

1.01 SUBMIT TO: Chris Brown at arkitek@arkitek.us

1.02 PROJECT: Willow Wind Renovation

1.03 SPECIFIED ITEM:

A. SECTION NAME AND NUMBER: _____

B. PRODUCT TYPE AND NAME AND MODEL: _____

C. PARAGRAPH AND PRODUCT DESCRIPTION: _____

1.04 PROPOSED SUBSTITUTION:

A. MANUFACTURER AND MODEL NUMBER(S): _____

B. PRODUCT DESCRIPTION: _____

C. Attached data includes product description, specifications, drawings, photographs, performance, test data and **point by point comparative matrix** adequate for evaluation of request including identification of applicable data portions. Attached data also includes description of changes to Contract Documents the proposed substitution requires for proper installation.

D. It is the responsibility of the requestee to assemble a comparative matrix outlining key elements of proposed substitution.

1.05 UNDERSIGNED CERTIFIES FOLLOWING ITEMS, UNLESS MODIFIED BY ATTACHMENTS, ARE CORRECT:

A. Proposed substitution does not affect dimensions shown on the drawings.

B. Undersigned pays for changes to building design, including engineering design, detailing, and construction costs caused by proposed substitution.

C. Proposed substitution has no adverse effect on other trades, construction schedule, or specified warranty requirements.

D. Maintenance and service parts are available locally or readily obtainable for proposed substitution.

1.06 UNDERSIGNED FURTHER CERTIFIES FUNCTION, APPEARANCE, AND QUALITY OF PROPOSED SUBSTITUTION ARE EQUIVALENT OR SUPERIOR TO SPECIFIED ITEM.

1.07 UNDERSIGNED FURTHER CERTIFIES THAT THE MANUFACTURER OF THE PROPOSED SUBSTITUTION IS AWARE OF THIS SUBSTITUTION REQUEST AND AGREES TO THE STATEMENTS NOTED ABOVE.

1.08 UNDERSIGNED AGREES THAT THE TERMS AND CONDITIONS FOR SUBSTITUTIONS FOUND IN BIDDING DOCUMENTS APPLY TO THIS PROPOSED SUBSTITUTION.

1.09 SUBMITTED BY:

A. PRINT NAME: _____

SIGNATURE:_____

B. FIRM NAME: _____

C. FULL MAILING ADDRESS: _____

City: _____ State: _____ Zip:_____

D. PHONE: _____ E-MAIL: _____

1.10 FOR USE BY ARCHITECT OR ENGINEER

A. APPROVED OR APPROVED AS NOTED BY: _____

B. NOT APPROVED BY: _____

C. RECEIVED TOO LATE: _____

D. REMARKS: _____

E. DATE OF RESPONSE: _____

END OF SECTION

PART 1 GENERAL

1.01 SECTION INCLUDES

A. Requirement for installer certification that they did not use any non-compliant products.

B. VOC restrictions for product categories listed below under "DEFINITIONS."

C. All products of each category that are installed in the project must comply; Owner's project goals do not allow for partial compliance.

1.02 RELATED REQUIREMENTS

A. Section 01 3000 - Administrative Requirements: Submittal procedures.

C. Section 01 4000 - Quality Requirements: Procedures for testing and certifications.

D. Section 01 5721 - Indoor Air Quality Controls: Procedures and testing.

E. Section 01 6000 - Product Requirements: Fundamental product requirements, substitutions and product options, delivery, storage, and handling.

1.03 DEFINITIONS

A. VOC-Restricted Products: All products of each of the following categories when installed or applied on-site in the building interior:

1. Adhesives, sealants, and sealer coatings.
2. Carpet.
3. Carpet tile.
4. Resilient floor coverings.
5. Paints and coatings.
6. Insulation.
7. Gypsum board.
8. Acoustical ceilings and panels.
9. Cabinet work.
10. Wall coverings.
11. Composite wood and agrifiber products used either alone or as part of another product.
12. Other products when specifically stated in the specifications.

B. Interior of Building: Anywhere inside the exterior weather barrier.

C. Adhesives: All gunnable, trowelable, liquid-applied, and aerosol adhesives, whether specified or not; including flooring adhesives, resilient base adhesives, and pipe jointing adhesives.

D. Sealants: All gunnable, trowelable, and liquid-applied joint sealants and sealant primers, whether specified or not; including firestopping sealants and duct joint sealers.

1.04 REFERENCE STANDARDS

A. CRI (GLP) - Green Label Plus Testing Program - Certified Products; Carpet and Rug Institute; Current Edition.

B. GreenSeal GC-03 - Anti-Corrosive Paints; Green Seal, Inc.; 2007

C. GreenSeal GS-11 - Paints; Green Seal, Inc.; 1993.

D. GreenSeal GS-36 - Commercial Adhesives; Green Seal, Inc.; 2011.

E. SCAQMD 1113 - South Coast Air Quality Management District Rule No.1113; current edition; http://www.aqmd.gov/

F. SCAQMD 1168 - South Coast Air Quality Management District Rule No.1168; current edition; www.aqmd.gov

G. SCS (CPD) - SCS Certified Products; Scientific Certification Systems; current listings at www.scscertified.com

1.05 SUBMITTALS

A. See Section 01 3000 - Administrative Requirements, for submittal procedures.

B. Evidence of Compliance: Submit for each different product in each applicable category.

C. Product Data: For each VOC-restricted product used in the project, submit evidence of compliance.

D. Installer Certifications Regarding Prohibited Content: Require each installer of any type of product (not just the products for which VOC restrictions are specified) to certify that either 1) no adhesives, joint sealants, paints, coatings, or composite wood or agrifiber products have been used in the installation of his products, or 2) that such products used comply with these requirements.

PART 2 PRODUCTS

2.01 MATERIALS

A. All Products: Comply with the most stringent of federal, State, and local requirements, or these specifications.

B. Adhesives and Joint Sealants: Provide only products having volatile organic compound (VOC) content not greater than required by South Coast Air Quality Management District Rule No.1168.

1. Definition: This provision applies to gunnable, trowelable, and liquid-applied adhesives, sealants, and sealant primers used anywhere on the interior of the building inside the weather barrier, including duct sealers and fire stopping.

2. ~~LEED:~~ Not Used

3. Certification: Require each installer to certify compliance and submit product data showing product content.

   a. Evidence of Compliance: Acceptable types of evidence are:

      1) Report of laboratory testing performed in accordance with requirements.

      2) Published product data showing compliance with requirements.

      3) Certification by manufacturer that product complies with requirements.

      4) SCAQMD limits for specific product categories:

         a) Architectural ApplicationsVOC Limit g/L less water

            1. Indoor Carpet Adhesives 50

            2. Carpet Pad Adhesives 50

            3. Outdoor Carpet Adhesives 150

            4. Wood Flooring Adhesive 100

            5. Rubber Floor Adhesives 60

            6. Subfloor Adhesives 50

            7. Ceramic Tile Adhesives 65

            8. VCT and Asphalt Tile Adhesives 50

            9. Dry Wall and Panel Adhesives 50

            10. Cove Base Adhesives 50

            11. Multipurpose Construction Adhesives 70

            12. Structural Glazing Adhesives 100

            13. Single Ply Roof Membrane Adhesives 250

         b) Specialty Applications VOC Limits g/L less water

            1. PVC Welding 510

            2. CPVC Welding490

            3. ABS Welding 325

            4. Plastic Cement Welding250

            5. Adhesive Primer for Plastic 550

6. Computer Diskette Manufacturing350
7. Contact Adhesive 80
8. Special Purpose Contact Adhesive250
9. Tire Retread 100
10. Adhesive Primer for Traffic Marking Tape150
11. Structural Wood Member Adhesive140
12. Sheet Applied Rubber Lining Operations850
13. Top and Trim Adhesive250

c) Substrate Specific ApplicationsVOC Limit g/L less water

1. Metal to Metal 30
2. Plastic Foams 50
3. Porous Material (except wood) 50
4. Wood 30
5. Fiberglass 80

d) Sealants VOC Limit g/L less water

1. Architectural 250
2. Marine Deck 760
3. Nonmembrane Roof 300
4. Roadway 250
5. Single-Ply Roof Membrane 450
6. Other 420

e) Sealant Primers VOC Limit g/L less water

1. Architectural Non Porous250
2. Architectural Porous775
3. Modified Bituminous 500
4. Marine Deck 760
5. Other 750

C. Aerosol Adhesives: Provide only products having volatile organic compound (VOC) content not greater than required by GreenSeal GS-36.

1. ~~LEED:~~ Not Used

2. Certification: Require each installer to certify compliance and submit product data showing product content.

   a. Evidence of Compliance: Acceptable types of evidence are:

      1) Current GreenSeal Certification.

      2) Report of laboratory testing performed in accordance with GreenSeal GS-36 requirements.

      3) Published product data showing compliance with requirements.

3. GreenSeal limits for specific product categories:

   a. Aerosol AdhesivesVOC Weight g/L minus water

      1) General purpose mist spray65% VOCs by weight

      2) General purpose web spray55% VOCs by weight

      3) Special purpose aerosol adhesives (all types)70% VOCs by weight

D. Paints and Coatings:

1. Definition: This provision applies to paints and coatings used anywhere on the interior of the building inside the weather barrier, including all primers and sealers.

2. Provide coatings that comply with the most stringent requirements specified in the following:

   a. Architectural Paints and Coatings: Do not exceed VOC content limits established in GreenSeal GS-11.

   b. Anti-Corrosive and Anti-Rust Paints: Do not exceed VOC content limits established in GreenSeal GS-03.

   c. Clear Wood Finishes, Floor Coatings, Stains, Primers and Shellacs: Do not exceed the VOC content limits established in SCAQMD Rule No. 1113.

3. Determination of VOC Content: Testing and calculation in accordance with 40 CFR 59, Subpart D (EPA Method 24), exclusive of colorants added to a tint base and water added at project site; or other method acceptable to authorities having jurisdiction.

4. This provision is applicable to LEED Credit EQ 4.1; submit LEED Prohibited Content Installer Certification Forms and all support material per section 01 35 16.07.

5. Certification: Require each installer to certify compliance and submit product data showing product content.

   a. Evidence of Compliance: Acceptable types of evidence are:

1) Report of laboratory testing performed in accordance with requirements.

2) Published product data showing compliance with requirements.

6. Limits for specific product categories:

a. Architectural paints, coatings and primers applied to interior walls and ceilings per GreenSeal GS-11

1) Flats: 50 g/L

2) Non-Flats: 150 g/L

3) Primers 50 g/L

b. Interior Anti-Corrosive and Anti-rust paints, coatings and primers per GreenSeal GS-03, Anti-Corrosive Paints

1) 250 g/L

c. All other coatings, paints and sealers per SCAQMD Rule #1113, Architectural Coatings

1) Coating CategoryVOC Limit g/L

(a) Bond Breakers 350

(b) Clear Wood Finishes275

(c) Varnish275

(d) Sanding Sealers275

(e) Lacquer275

(f) Clear Brushing Lacquer275

(g) Concrete-Curing Compounds100

(h) Concrete-Curing Compounds For Roadways and Bridges350

(i) Dry-Fog Coatings150

(j) Fire-Proofing Exterior Coatings350

(k) Fire-Retardant Coatings Clear 650

(l) Fire-Retardant Coatings Pigmented 350

(m) Flats50

(n) Floor Coatings50

(o) Graphic Arts (Sign) Coatings 500

(p) Industrial Maintenance (IM) Coatings100

(q) High Temperature IM Coatings 420

(r) Zinc-Rich IM Primers100

(s) Japans/Faux Finishing Coatings350

(t) Magnesite Cement Coatings450

(u) Mastic Coatings300

(v) Metallic Pigmented Coatings500

(w) Multi-Color Coatings250

(x) Nonflat Coatings50

(y) Nonflat High Gloss50

(z) Pigmented Lacquer 275

(aa) Pre-Treatment Wash Primers420

(ab) Primers, Sealers, and Undercoaters100

(ac) Quick-Dry Enamels 50

(ad) Quick-Dry Primers, Sealers, and Undercoaters100

(ae) Recycled Coatings250

(af) Roof Coatings50

(ag) Roof Coatings, Aluminum100

(ah) Roof Primers, Bituminous350

(ai) Rust Preventative Coatings100

(aj) Shellac Clear 730

(ak) Shellac Pigmented 550

(al) Specialty Primers100

(am) Stains100

(an) Stains, Interior 250

(ao) Swimming Pool Coatings Repair340

(ap) Swimming Pool Coatings Other340

(aq) Traffic Coatings100

(ar) Waterproofing Sealers100

(as) Waterproofing Concrete/Masonry Sealers100

(at) Wood Preservatives Below-Ground350

(au) Wood Preservatives- Other 350

(av) Low-Solids Coating 120

E. Carpet and Adhesive: Provide products having VOC content not greater than that required for CRI Green Label Plus certification.

1. Evidence of Compliance: Acceptable types of evidence are:

a. Current Green Label Plus Certification.

b. Report of laboratory testing performed in accordance with requirements.

F. Carpet Tile and Adhesive: Provide products having VOC content not greater than that required for CRI Green Label Plus certification.

1. Evidence of Compliance: Acceptable types of evidence are:

a. Current Green Label Plus Certification.

b. Report of laboratory testing performed in accordance with requirements.

G. Composite Wood and Agrifiber Products and Adhesives Used for Laminating Them: Provide products having no added urea-formaldehyde resins.

1. Evidence of Compliance: Acceptable types of evidence are:

a. Current SCS "No Added Urea Formaldehyde" certification; www.scscertified.com.

b. Published product data showing compliance with requirements.

H. Other Product Categories: Comply with limitations specified elsewhere.

PART 3 EXECUTION

3.01 FIELD QUALITY CONTROL

A. Owner reserves the right to reject non-compliant products, whether installed or not, and require their removal and replacement with compliant products at no extra cost to Owner.

B. Additional costs to restore indoor air quality due to installation of non-compliant products will be borne by Contractor.

END OF SECTION

PART 1 GENERAL

1.01 SECTION INCLUDES

A. Examination, preparation, and general installation procedures.

B. Requirements for alterations work, including selective demolition, except removal, disposal, and/or remediation of hazardous materials and toxic substances.

C. Requirements for forming openings in existing construction for all work including mechanical and electrical work.

D. Pre-installation meetings.

E. Cutting and patching.

F. Surveying for laying out the work.

G. Cleaning and protection.

H. Starting of systems and equipment.

I. Demonstration and instruction of Owner personnel.

J. Closeout procedures, including Contractor's Correction Punch List, except payment procedures.

K. General requirements for maintenance service.

L. Substantial completion

M. Final Completion

N. Additional fees for delays in completing work

1.02 RELATED REQUIREMENTS

A. Section 01 1000 - Summary: Limitations on working in existing building; continued occupancy; work sequence; identification of salvaged and relocated materials.

B. Section 01 3000 - Administrative Requirements: Submittals procedures, Electronic document submittal service.

C. Section 01 4000 - Quality Requirements: Testing and inspection procedures.

D. Section 01 5000 - Temporary Facilities and Controls: Temporary exterior enclosures.

E. Section 01 5000 - Temporary Facilities and Controls: Temporary interior partitions.

F. Section 01 5100 - Temporary Utilities: Temporary heating, cooling, and ventilating facilities.

G. Section 01 7419 - Construction Waste Management and Disposal: Additional procedures for trash/waste removal, recycling, salvage, and reuse.

H. Section 01 7800 - Closeout Submittals: Project record documents, operation and maintenance data, warranties and bonds.

1.03 REFERENCE STANDARDS

A. NFPA 241 - Standard for Safeguarding Construction, Alteration, and Demolition Operations; 2013.

1.04 SUBMITTALS

A. See Section 01 3000 - Administrative Requirements, for submittal procedures.

B. Survey work: Submit name, address, and telephone number of Surveyor before starting survey work.

1. On request, submit documentation verifying accuracy of survey work.

2. Submit a copy of site drawing signed by the Land Surveyor, that the elevations and locations of the work are in conformance with Contract Documents.

3. Submit surveys and survey logs for the project record.

C. Cutting and Patching: Submit written request in advance of cutting or alteration that affects:

1. Structural integrity of any element of Project.

2. Integrity of weather exposed or moisture resistant element.

3. Efficiency, maintenance, or safety of any operational element.

4. Visual qualities of sight exposed elements.

5. Work of Owner or separate Contractor.

6. Include in request:

a. Identification of Project.

b. Location and description of affected work.

c. Necessity for cutting or alteration.

d. Description of proposed work and products to be used.

e. Effect on work of Owner or separate Contractor.

f. Written permission of affected separate Contractor.

g. Date and time work will be executed.

D. Project Record Documents: Accurately record actual locations of capped and active utilities.

1.05 QUALIFICATIONS

A. For survey work, employ a land surveyor registered in the State in which the Project is located and acceptable to Architect. Submit evidence of Surveyor's Errors and Omissions insurance coverage in the form of an Insurance Certificate.

1.06 PROJECT CONDITIONS

A. Use of explosives is not permitted.

B. Grade site to drain. Maintain excavations free of water. Provide, operate, and maintain pumping equipment.

C. Protect site from puddling or running water. Provide water barriers as required to protect site from soil erosion.

D. Ventilate enclosed areas to assist cure of materials, to dissipate humidity, and to prevent accumulation of dust, fumes, vapors, or gases.

E. Dust Control: Execute work by methods to minimize raising dust from construction operations. Provide positive means to prevent air-borne dust from dispersing into atmosphere and over adjacent property.

1. Provide dust-proof enclosures to prevent entry of dust generated outdoors.

F. Erosion and Sediment Control: Plan and execute work by methods to control surface drainage from cuts and fills, from borrow and waste disposal areas. Prevent erosion and sedimentation.

1. Minimize amount of bare soil exposed at one time.

2. Provide temporary measures such as berms, dikes, and drains, to prevent water flow.

3. Construct fill and waste areas by selective placement to avoid erosive surface silts or clays.

4. Periodically inspect earthwork to detect evidence of erosion and sedimentation; promptly apply corrective measures.

G. Noise Control: Provide methods, means, and facilities to minimize noise produced by construction operations.

1. At All Times: Excessively noisy tools and operations will not be tolerated inside the building at any time of day; excessively noisy includes jackhammers.

2. Outdoors: Limit conduct of especially noisy exterior work to the hours of 8 am to 5 pm.

3. Indoors: Limit conduct of especially noisy interior work to the hours of 6 pm to 7 am.

H. Pest and Rodent Control: Provide methods, means, and facilities to prevent pests and insects from damaging the work.

I. Pollution Control: Provide methods, means, and facilities to prevent contamination of soil, water, and atmosphere from discharge of noxious, toxic substances, and pollutants produced by construction operations. Comply with federal, state, and local regulations.

1.07 COORDINATION

A. Coordinate work of alterations and renovations to expedite completion sequentially and to accommodate occupancy requirements.

B. Coordinate scheduling, submittals, and work of the various sections of the Project Manual to ensure efficient and orderly sequence of installation of interdependent construction elements, with provisions for accommodating items installed later.

C. Notify affected utility companies and comply with their requirements.

D. Verify that utility requirements and characteristics of new operating equipment are compatible with building utilities. Coordinate work of various sections having interdependent responsibilities for installing, connecting to, and placing in service, such equipment.

E. Coordinate space requirements, supports, and installation of mechanical and electrical work that are indicated diagrammatically on Drawings. Follow routing shown for pipes, ducts, and conduit, as closely as practicable; place runs parallel with lines of building. Utilize spaces efficiently to maximize accessibility for other installations, for maintenance, and for repairs.

F. In finished areas except as otherwise indicated, conceal pipes, ducts, and wiring within the construction. Coordinate locations of fixtures and outlets with finish elements.

G. Coordinate completion and clean-up of work of separate sections.

H. After Owner occupancy of premises, coordinate access to site for correction of defective work and work not in accordance with Contract Documents, to minimize disruption of Owner's activities.

1.08 CONTRACTOR'S FULL TIME SUPERVISION OF THE WORK

A. Contractor shall provide an on-site project superintendent to be present full time whenever work is occurring on site.

B. Contractor's Superintendent shall maintain a Daily Log of work activities at the site during construction.

1. Submit copies of the Daliy Logs to the Owner on a weekly basis.

PART 2 PRODUCTS

2.01 PATCHING MATERIALS

A. New Materials: As specified in product sections; match existing products and work for patching and extending work.

B. Type and Quality of Existing Products: Determine by inspecting and testing products where necessary, referring to existing work as a standard.

C. Product Substitution: For any proposed change in materials, submit request for substitution described in Section 01 6000 - Product Requirements.

PART 3 EXECUTION

3.01 EXAMINATION

A. Verify that existing site conditions and substrate surfaces are acceptable for subsequent work. Start of work means acceptance of existing conditions.

B. Verify that existing substrate is capable of structural support or attachment of new work being applied or attached.

C. Examine and verify specific conditions described in individual specification sections.

D. Take field measurements before confirming product orders or beginning fabrication, to minimize waste due to over-ordering or misfabrication.

E. Verify that utility services are available, of the correct characteristics, and in the correct locations.

F. Prior to Cutting: Examine existing conditions prior to commencing work, including elements subject to damage or movement during cutting and patching. After uncovering existing work, assess conditions affecting performance of work. Beginning of cutting or patching means acceptance of existing conditions.

3.02 PREPARATION

A. Clean substrate surfaces prior to applying next material or substance.

B. Seal cracks or openings of substrate prior to applying next material or substance.

C. Apply manufacturer required or recommended substrate primer, sealer, or conditioner prior to applying any new material or substance in contact or bond.

3.03 PREINSTALLATION MEETINGS

A. When required in individual specification sections, convene a preinstallation meeting at the site prior to commencing work of the section.

B. Require attendance of parties directly affecting, or affected by, work of the specific section.

C. Notify Architect seven days in advance of meeting date.

D. Prepare agenda and preside at meeting:

1. Review conditions of examination, preparation and installation procedures.

2. Review coordination with related work.

E. Record minutes and distribute copies within two days after meeting to participants, with two copies to Architect, Owner, participants, and those affected by decisions made.

3.04 LAYING OUT THE WORK

A. Verify locations of survey control points prior to starting work.

B. Promptly notify Architect of any discrepancies discovered.

C. Protect survey control points prior to starting site work; preserve permanent reference points during construction.

D. Promptly report to Architect the loss or destruction of any reference point or relocation required because of changes in grades or other reasons.

E. Replace dislocated survey control points based on original survey control. Make no changes without prior written notice to Architect.

F. Utilize recognized engineering survey practices.

G. Establish elevations, lines and levels. Locate and lay out by instrumentation and similar appropriate means:

1. Site improvements including pavements; stakes for grading, fill and topsoil placement; utility locations, slopes, and invert elevations.

2. Grid or axis for structures.

3. Building foundation, column locations, ground floor elevations.

H. Periodically verify layouts by same means.

I. Maintain a complete and accurate log of control and survey work as it progresses.

3.05 GENERAL INSTALLATION REQUIREMENTS

A. Install products as specified in individual sections, in accordance with manufacturer's instructions and recommendations, and so as to avoid waste due to necessity for replacement.

B. Make vertical elements plumb and horizontal elements level, unless otherwise indicated.

C. Install equipment and fittings plumb and level, neatly aligned with adjacent vertical and horizontal lines, unless otherwise indicated.

D. Make consistent texture on surfaces, with seamless transitions, unless otherwise indicated.

E. Make neat transitions between different surfaces, maintaining texture and appearance.

3.06 ALTERATIONS

A. The stability and integrity of the existing structure during demolition and selective demolition shall be maintained at levels generally acceptable within the construction industry by the use of temporary bracing, shoring, and underpinning until the proposed structure modifications are completed. In no case shall the existing structure be allowed to become unsafe during construction.

B. The design, installation, and removal of shoring and bracing systems required to provide temporary support of the existing structure during construction shall be the responsibility of the Contractor and shall be designed to support the dead, live, soil, earthquake, and wind loads that may be imposed on the structure during construction in accordance with industry standards and generally accepted engineering principals. Provide the services of a registered professional engineer to design these systems when required by Oregon State Statute and the building code.

C. Drawings showing existing construction and utilities are based on casual field observation and existing record documents only.

1. Verify that construction and utility arrangements are as shown.

2. Report discrepancies to Architect before disturbing existing installation.

3. Beginning of alterations work constitutes acceptance of existing conditions.

D. Keep areas in which alterations are being conducted separated from other areas that are still occupied.

1. Provide, erect, and maintain temporary dustproof partitions of construction specified in Section 01 5000 in locations indicated on drawings.

2. Provide appropriate temporary signage including signage for exit or building egress.

E. Maintain weatherproof exterior building enclosure except for interruptions required for replacement or modifications; take care to prevent water and humidity damage.

1. Where openings in exterior enclosure exist, provide construction to make exterior enclosure weatherproof.

2. Insulate existing ducts or pipes that are exposed to outdoor ambient temperatures by alterations work.

F. Comply with regulatory requirements for Alteration Work:

1. Conform to applicable code for demolition work, dust control, products requiring electrical disconnection and re-connection.

2. Obtain required permits from authorities.

3. Do not close or obstruct egress from any building exit or site exit.

4. Do not disable or disrupt building fire or life safety systems without 3 days' prior written notice to Owner.

5. Conform to applicable regulatory procedures when hazardous or contaminated materials are discovered. Stop all work in the area and notify the Owner's representative.

a. Owner will provide verification, abatement, and removal as required to complete the Work.

G. Remove existing work as indicated and as required to accomplish new work.

1. Remove items indicated on drawings.

2. Relocate items indicated on drawings.

3. Where new surface finishes are to be applied to existing work, perform removals, patch, and prepare existing surfaces as required to receive new finish; remove existing finish if necessary for successful application of new finish.

4. Where new surface finishes are not specified or indicated, patch holes and damaged surfaces to match adjacent finished surfaces as closely as possible

H. Services (Including but not limited to HVAC, Plumbing, Fire Protection, Electrical, and Telecommunications): Remove, relocate, and extend existing systems to accommodate new construction.

1. Notify affected utility companies before starting work and comply with their requirements.

2. Mark location and termination of utilities.

3. Maintain existing active systems that are to remain in operation; maintain access to equipment and operational components; if necessary, modify installation to allow access or provide access panel.

4. Do not interrupt existing utilities serving occupied or used facilities, except when authorized in writing by the Owner. Provide temporary services during interruption of existing utilities, as acceptable to the Owner

5. Where existing systems or equipment are not active and Contract Documents require reactivation, put back into operational condition; repair supply, distribution, and equipment as required.

6. Where existing active systems serve occupied facilities but are to be replaced with new services, maintain existing systems in service until new systems are complete and ready for service.

   a. Disable existing systems only to make switchovers and connections; minimize duration of outages.

   b. Provide temporary connections as required to maintain existing systems in service.

7. Verify that abandoned services serve only abandoned facilities.

8. Remove abandoned pipe, ducts, conduits, and equipment, including those above accessible ceilings; remove back to source of supply where possible, otherwise cap stub and tag with identification; patch holes left by removal using materials specified for new construction.

I. Protect existing work to remain.

1. Prevent movement of structure; provide shoring and bracing if necessary.

2. Perform cutting to accomplish removals neatly and as specified for cutting new work.

3. Repair adjacent construction and finishes damaged during removal work.

4. Cover finish floors to remain.

5. Use only rubber tired vehicles for conveying materials in building.

J. Adapt existing work to fit new work: Make as neat and smooth transition as possible.

1. When existing finished surfaces are cut so that a smooth transition with new work is not possible, terminate existing surface along a straight line at a natural line of division and make recommendation to Architect.

2. Where removal of partitions or walls results in adjacent spaces becoming one, rework floors, walls, and ceilings to a smooth plane without breaks, steps, or bulkheads.

3. Where a change of plane of 1/4 inch or more occurs in existing work, submit recommendation for providing a smooth transition for Architect review and request instructions.

4. Trim existing wood doors as necessary to clear new floor finish. Refinish trim as required.

K. Patching: Where the existing surface is not indicated to be refinished, patch to match the surface finish that existed prior to cutting. Where the surface is indicated to be refinished, patch so that the substrate is ready for the new finish.

L. Refinish existing surfaces as indicated:

1. Where rooms or spaces are indicated to be refinished, refinish all visible existing surfaces to remain to the specified condition for each material, with a neat transition to adjacent finishes.

2. If mechanical or electrical work is exposed accidentally during the work, re-cover and refinish to match.

M. Clean existing systems and equipment.

N. Remove demolition debris and abandoned items from alterations areas and dispose of off-site; do not burn or bury.

O. Clean remaining structure, equipment and facilities of all dirt, dust, and debris caused by demolition work. Return areas to conditions existing prior to the start of the work.

P. Do not begin new construction in alterations areas before demolition is complete.

Q. Comply with all other applicable requirements of this section.

3.07 CUTTING AND PATCHING

A. Whenever possible, execute the work by methods that avoid cutting or patching.

B. See Alterations article above for additional requirements.

C. Perform whatever cutting and patching is necessary to:

1. Complete the work.

2. Fit products together to integrate with other work.

3. Provide openings for penetration of mechanical, electrical, and other services.

4. Match work that has been cut to adjacent work.

5. Repair areas adjacent to cuts to required condition.

6. Repair new work damaged by subsequent work.

7. Remove samples of installed work for testing when requested.

8. Remove and replace defective and non-conforming work.

D. Execute work by methods that avoid damage to other work and that will provide appropriate surfaces to receive patching and finishing. In existing work, minimize damage and restore to original condition.

E. Employ original installer to perform cutting for weather exposed and moisture resistant elements, and sight exposed surfaces.

F. Cut rigid materials using masonry saw or core drill. Pneumatic tools not allowed without prior approval.

G. Restore work with new products in accordance with requirements of Contract Documents.

H. Fit work air tight to pipes, sleeves, ducts, conduit, and other penetrations through surfaces.

I. At penetrations of fire rated walls, partitions, ceiling, or floor construction, completely seal voids with fire rated material in accordance with Section 07 8400, to full thickness of the penetrated element.

J. Sawcutting:

1. Employ experienced sawcutting contractor to make all holes, or slab and pavement cutting shown in drawings for architectural, structural, mechanical and electrical work.

2. Do not use water saws in occupied areas, unless otherwise approved.

3. Cut openings square and plumb with sharp edges. Minimize overcutting at corners.

4. Verify location of existing utilities in work area and make proper precautions to protect, disconnect and relocate, or terminate services as directed.

K. Patching:

1. Finish patched surfaces to match finish that existed prior to patching. On continuous surfaces, refinish to nearest intersection or natural break. For an assembly, refinish entire unit.

2. Match color, texture, and appearance.

3. Repair patched surfaces that are damaged, lifted, discolored, or showing other imperfections due to patching work. If defects are due to condition of substrate, repair substrate prior to repairing finish.

L. Maintain adequate Temporary Support necessary to assure structural integrity of affected Work.

M. Protect other portions of Project Work against damage and discoloration.

N. Protect Work exposed by cutting against damage and discoloration.

O. Refinish surfaces to match adjacent finish. For continuous surfaces, refinish to nearest intersection or natural break. For an assembly, refinish entire unit.

P. Make neat transitions. Patch work to match adjacent work in texture and appearance. Where new work abuts or aligns with existing, perform a smooth and even transition.

Q. Patch or replace surfaces that are damaged, lifted, discolored, or showing other imperfections due to patching work. Repair substrate prior to patching finish. Finish patches to produce uniform finish and texture over entire area. When finish cannot be matched, refinish entire surface to nearest intersections.

3.08 PROGRESS CLEANING

A. Maintain areas free of waste materials, debris, and rubbish. Maintain site in a clean and orderly condition.

B. Remove debris and rubbish from pipe chases, plenums, attics, crawl spaces, and other closed or remote spaces, prior to enclosing the space.

C. Broom and vacuum clean interior areas prior to start of surface finishing, and continue cleaning to eliminate dust.

D. Collect and remove waste materials, debris, and trash/rubbish from site periodically and dispose off-site; do not burn or bury.

3.09 PROTECTION OF INSTALLED WORK

A. Protect installed work from damage by construction operations.

B. Provide special protection where specified in individual specification sections.

C. Provide temporary and removable protection for installed products. Control activity in immediate work area to prevent damage.

D. Provide protective coverings at walls, projections, jambs, sills, and soffits of openings.

E. Protect finished floors, stairs, and other surfaces from traffic, dirt, wear, damage, or movement of heavy objects, by protecting with durable sheet materials.

F. Prohibit traffic or storage upon waterproofed or roofed surfaces. If traffic or activity is necessary, obtain recommendations for protection from waterproofing or roofing material manufacturer.

G. Prohibit traffic from landscaped areas.

H. Remove protective coverings when no longer needed; reuse or recycle plastic coverings if possible.

3.10 SYSTEM STARTUP

A. Coordinate schedule for start-up of various equipment and systems.

B. Notify Architect and owner seven days prior to start-up of each item.

C. Verify that each piece of equipment or system has been checked for proper lubrication, drive rotation, belt tension, control sequence, and for conditions that may cause damage.

D. Verify tests, meter readings, and specified electrical characteristics agree with those required by the equipment or system manufacturer.

E. Verify that wiring and support components for equipment are complete and tested.

F. Execute start-up under supervision of applicable Contractor personnel and manufacturer's representative in accordance with manufacturers' instructions.

G. When specified in individual specification Sections, require manufacturer to provide authorized representative to be present at site to inspect, check, and approve equipment or system installation prior to start-up, and to supervise placing equipment or system in operation.

H. Submit a written report that equipment or system has been properly installed and is functioning correctly.

3.11 DEMONSTRATION AND INSTRUCTION

A. Demonstrate operation and maintenance of products to Owner's personnel two weeks prior to date of Substantial Completion.

B. Demonstrate start-up, operation, control, adjustment, trouble-shooting, servicing, maintenance, and shutdown of each item of equipment at scheduled time, at equipment location.

C. For equipment or systems requiring seasonal operation, perform demonstration for other season within six months.

D. Provide a qualified person who is knowledgeable about the Project to perform demonstration and instruction of owner personnel.

E. Utilize operation and maintenance manuals as basis for instruction. Review contents of manual with Owner's personnel in detail to explain all aspects of operation and maintenance.

F. Prepare and insert additional data in operations and maintenance manuals when need for additional data becomes apparent during instruction.

G. The amount of time required for instruction on each item of equipment and system is that specified in individual sections.

3.12 ADJUSTING

A. Adjust operating products and equipment to ensure smooth and unhindered operation.

B. Testing, adjusting, and balancing HVAC systems: See Section 23 0593 - Testing, Adjusting, and Balancing for HVAC.

3.13 FINAL CLEANING

A. Use cleaning materials that are nonhazardous.

B. Clean interior and exterior glass, surfaces exposed to view; remove temporary labels, stains and foreign substances, polish transparent and glossy surfaces, vacuum carpeted and soft surfaces.

C. Remove all labels that are not permanent. Do not paint or otherwise cover fire test labels or nameplates on mechanical and electrical equipment.

D. Clean equipment and fixtures to a sanitary condition with cleaning materials appropriate to the surface and material being cleaned.

E. Clean interior floors in accordance with flooring manufacturer instructions.

F. Clean filters of operating equipment.

G. Clean debris from roofs, gutters, downspouts, scuppers, overflow drains, area drains, and drainage systems.

H. Clean site; sweep paved areas, rake clean landscaped surfaces.

I. Remove waste, surplus materials, trash/rubbish, and construction facilities from the site; dispose of in legal manner; do not burn or bury.

3.14 CLOSEOUT PROCEDURES

A. Make submittals that are required by governing or other authorities.

B. Accompany Project Coordinator on preliminary inspection to determine items to be listed for completion or correction in the Contractor's Correction Punch List for Contractor's Notice of Substantial Completion.

C. Notify Architect when work is considered ready for Architect's Substantial Completion inspection.

D. Conduct Substantial Completion inspection and create Final Correction Punch List containing Architect's and Contractor's comprehensive list of items identified to be completed or corrected and submit to Architect.

3.15 SUBSTANTIAL COMPLETION

A. Submit written certification that Contract Documents have been reviewed, work has been inspected, and that work is complete in accordance with Contract Documents and ready for Architect's review.

B. Complete all required maintenance work prior to the date of substantial completion.

C. When Contractor considers Work substantially complete, as defined in General Conditions, submit to the Architect:

1. Written notice that Work, or designated portion thereof, is substantially complete.

2. List of Items to be completed or corrected.

3. Copy of Final or Temporary Occupancy Permit.

D. Architect will, as soon as possible thereafter, make an observation visit to the site to determine completion status.

E. Should Architect determine that Work is not substantially complete:

1. Architect will promptly notify Contractor in writing, giving reasons therefore.

2. Contractor shall remedy Work deficiencies, and send second notice of substantial completion to Architect.

3. Architect will review the corrected work.

F. When Architect concurs that Work is substantially complete, Architect will:

1. Prepare Certificate of Substantial Completion, accompanied by Contractor's list of items to be completed or corrected, as verified and amended by Architect.

2. Submit Certificate to Owner and Contractor for their written acceptance of the responsibilities assigned to them in the Certificate.

G. Correct items of work listed in executed Certificates of Substantial Completion and comply with requirements for access to Owner-occupied areas.

H. Notify Architect when work is considered finally complete.

I. Complete items of work determined by Architect's final inspection.

J. See: ***General Conditions of the Contract for Construction*** for additonal requirements.

3.16 FINAL ACCEPTANCE

A. When Contractor considers Work complete, submit written certification that:

1. Contract Documents have been reviewed.

2. Contractor has inspected Work for compliance with Contract Documents.

3. Work has been completed in accordance with Contract Documents.

4. Equipment and Systems have been tested in presence of Owner's Representative and are operational.

5. Work is complete and ready for final inspection.

B. Architect will, as soon as possible thereafter, make an observation visit to the site to determine completion status.

C. Should Architect consider Work incomplete or defective:

1. Architect will promptly notify Contractor in writing, listing incomplete or defective Work.

2. Contractor shall immediately remedy deficiencies, and send second written certification to Architect that Work is complete.

3. Architect will review the corrected Work.

D. When Architect finds Work acceptable under Contract Documents, Architect will request Contractor to make closeout submittals.

E. See: ***General Conditions of the Contract for Construction*** for additonal requirements.

3.17 ADDITIONAL FEES FOR DELAYS IN COMPLETING THE WORK

A. Architect will make 2 visits to the project site, one at Substantial Completion and one at Final Completion.

B. Should Architect be required to make more than the stated 2 final site visits due to Contractor's failure to correct specified deficiencies:

1. Owner will compensate Architect for additional services.

2. Owner will deduct Architect's compensation amount from Contractor's final payment as follows:

a. Principal's time at their contracted hourly rate.

b. Employees' time at their contracted hourly rate.

c. Consultant employees and Others at 1.1 times the direct cost incurred.

d. Charges will be made for necessary travel time, commercial air fare, auto expense computed at current allowable IRS mileage rate, room and board, and all other expenses incurred in making inspections.

END OF SECTION

PART 1 GENERAL

1.01 WASTE MANAGEMENT REQUIREMENTS

A. Owner requires that this project generate the least amount of trash and waste possible.

B. Employ processes that ensure the generation of as little waste as possible due to error, poor planning, breakage, mishandling, contamination, or other factors.

C. Minimize trash/waste disposal in landfills; reuse, salvage, or recycle as much waste as economically feasible.

D. Required Recycling, Salvage, and Reuse: The following may not be disposed of in landfills or by incineration:

1. Aluminum and plastic beverage containers.

2. Corrugated cardboard.

3. Wood pallets.

4. Clean dimensional wood: May be used as blocking or furring.

5. Land clearing debris, including brush, branches, logs, and stumps; see Section 31 1000 - Site Clearing for use options.

6. Metals, including packaging banding, metal studs, sheet metal, structural steel, piping, reinforcing bars, door frames, and other items made of steel, iron, galvanized steel, stainless steel, aluminum, copper, zinc, lead, brass, and bronze.

7. Fluorescent lamps (light bulbs).

E. Contractor shall submit periodic Waste Disposal Reports; all landfill disposal, recycling, salvage, and reuse must be reported regardless of to whom the cost or savings accrues; use the same units of measure on all reports.

F. Contractor shall develop and follow a Waste Management Plan designed to implement these requirements.

G. Methods of trash/waste disposal that are not acceptable are:

1. Burning on the project site.

2. Burying on the project site.

3. Dumping or burying on other property, public or private.

4. Other illegal dumping or burying.

5. Incineration, either on- or off-site.

6. Use of Owner's trash receptacles.

H. Regulatory Requirements: Contractor is responsible for knowing and complying with regulatory requirements, including but not limited to Federal, state and local

requirements, pertaining to legal disposal of all construction and demolition waste materials.

1.02 RELATED REQUIREMENTS

A. Section 01 3000 - Administrative Requirements: Additional requirements for project meetings, reports, submittal procedures, and project documentation.

B. Section 01 5000 - Temporary Facilities and Controls: Additional requirements related to trash/waste collection and removal facilities and services.

C. Section 01 6000 - Product Requirements: Waste prevention requirements related to delivery, storage, and handling.

D. Section 01 7000 - Execution and Closeout Requirements: Trash/waste prevention procedures related to demolition, cutting and patching, installation, protection, and cleaning.

1.03 DEFINITIONS

A. Clean: Untreated and unpainted; not contaminated with oils, solvents, caulk, or the like.

B. Construction and Demolition Waste: Solid wastes typically including building materials, packaging, trash, debris, and rubble resulting from construction, remodeling, repair and demolition operations.

C. Hazardous: Exhibiting the characteristics of hazardous substances, i.e., ignitibility, corrosivity, toxicity or reactivity.

D. Nonhazardous: Exhibiting none of the characteristics of hazardous substances, i.e., ignitibility, corrosivity, toxicity, or reactivity.

E. Nontoxic: Neither immediately poisonous to humans nor poisonous after a long period of exposure.

F. Recyclable: The ability of a product or material to be recovered at the end of its life cycle and remanufactured into a new product for reuse by others.

G. Recycle: To remove a waste material from the project site to another site for remanufacture into a new product for reuse by others.

H. Recycling: The process of sorting, cleansing, treating and reconstituting solid waste and other discarded materials for the purpose of using the altered form. Recycling does not include burning, incinerating, or thermally destroying waste.

I. Return: To give back reusable items or unused products to vendors for credit.

J. Reuse: To reuse a construction waste material in some manner on the project site.

K. Salvage: To remove a waste material from the project site to another site for resale or reuse by others.

L. Sediment: Soil and other debris that has been eroded and transported by storm or well production run-off water.

M. Source Separation: The act of keeping different types of waste materials separate beginning from the first time they become waste.

N. Toxic: Poisonous to humans either immediately or after a long period of exposure.

O. Trash: Any product or material unable to be reused, returned, recycled, or salvaged.

P. Waste: Extra material or material that has reached the end of its useful life in its intended use. Waste includes salvageable, returnable, recyclable, and reusable material.

1.04 SUBMITTALS

A. See Section 01 3000 - Administrative Requirements, for submittal procedures.

B. Submit Waste Management Plan within 10 calendar days after receipt of Notice of Award of Bid, or prior to any trash or waste removal, whichever occurs sooner; submit projection of all trash and waste that will require disposal and alternatives to landfilling.

C. Waste Management Plan: Include the following information:

1. Analysis of the trash and waste projected to be generated during the entire project construction cycle, including types and quantities.

2. Landfill Options: The name, address, and telephone number of the landfill(s) where trash/waste will be disposed of, the applicable landfill tipping fee(s), and the projected cost of disposing of all project trash/waste in the landfill(s).

3. Landfill Alternatives: List all waste materials that will be diverted from landfills by reuse, salvage, or recycling.

D. Waste Disposal Reports: Submit at specified intervals, with details of quantities of trash and waste, means of disposal or reuse, and costs; show both totals to date and since last report.

1. Submit updated Report with each Application for Progress Payment; failure to submit Report will delay payment.

2. Submit Report on a form acceptable to Owner.

3. Landfill Disposal: Include the following information:

a. Identification of material.

b. Amount, in tons or cubic yards, of trash/waste material from the project disposed of in landfills.

c. State the identity of landfills, total amount of tipping fees paid to landfill, and total disposal cost.

d. Include manifests, weight tickets, receipts, and invoices as evidence of quantity and cost.

4. Recycled and Salvaged Materials: Include the following information for each:

a. Identification of material, including those retrieved by installer for use on other projects.

b. Amount, in tons or cubic yards, date removed from the project site, and receiving party.

c. Transportation cost, amount paid or received for the material, and the net total cost or savings of salvage or recycling each material.

d. Include manifests, weight tickets, receipts, and invoices as evidence of quantity and cost.

e. Certification by receiving party that materials will not be disposed of in landfills or by incineration.

5. Material Reused on Project: Include the following information for each:

a. Identification of material and how it was used in the project.

b. Amount, in tons or cubic yards.

c. Include weight tickets as evidence of quantity.

6. Other Disposal Methods: Include information similar to that described above, as appropriate to disposal method.

PART 2 PRODUCTS - NOT USED

PART 3 EXECUTION

3.01 WASTE MANAGEMENT PLAN IMPLEMENTATION

A. Manager: Designate an on-site person or persons responsible for instructing workers and overseeing and documenting results of the Waste Management Plan.

B. Spill Response Planning - Establish spill prevention and cleanup procedures. Identify all potential spill areas and develop procedures for avoiding and responding to spills should they occur.

C. Communication: Distribute copies of the Waste Management Plan to job site foreman, each subcontractor, Owner, and Architect.

D. Instruction: Provide on-site instruction of appropriate separation, handling, and recycling, salvage, reuse, and return methods to be used by all parties at the appropriate stages of the project.

E. Meetings: Discuss trash/waste management goals and issues at project meetings.

1. Pre-bid meeting.

2. Pre-construction meeting.

3. Regular job-site meetings.

F. Facilities: Provide specific facilities for separation and storage of materials for recycling, salvage, reuse, return, and trash disposal, for use by all contractors and installers.

1. Provide containers as required.

2. Provide adequate space for pick-up and delivery and convenience to subcontractors.

3. If an enclosed area is not provided, clearly lay out and label a specific area on-site.

4. Keep recycling and trash/waste bin areas neat and clean and clearly marked in order to avoid contamination of materials.

G. Hazardous Wastes: Separate, store, and dispose of hazardous wastes according to applicable regulations.

H. Recycling: Separate, store, protect, and handle at the site identified recyclable waste products in order to prevent contamination of materials and to maximize recyclability of identified materials. Arrange for timely pickups from the site or deliveries to recycling facility in order to prevent contamination of recyclable materials.

I. Reuse of Materials On-Site: Set aside, sort, and protect separated products in preparation for reuse.

J. Salvage: Set aside, sort, and protect products to be salvaged for reuse off-site.

END OF SECTION

PART 1 GENERAL

1.01 SECTION INCLUDES

A. Project Record Documents.

B. Operation and Maintenance Data.

C. Warranties and bonds.

1.02 RELATED REQUIREMENTS

A. ***Section 00 6000 General Conditions of Construction Contract*** for additonal requirements.

B. Section 01 3000 - Administrative Requirements: Submittals procedures, shop drawings, product data, and samples.

C. Section 01 7000 - Execution and Closeout Requirements: Contract closeout procedures.

D. Individual Product Sections: Specific requirements for operation and maintenance data.

E. Individual Product Sections: Warranties required for specific products or Work.

1.03 SUBMITTALS

A. Substantial Completion will not commence before the Operations and Maintenance Manuals, Warranties, and the Record Drawings are submitted in accordance with Section 01 7000.

B. Project Record Documents: Submit documents to Consultant Prior to Substantial Completion.

C. Operation and Maintenance Data:

1. Submit one paper copy of preliminary draft or proposed formats and outlines of contents before start of Work. Consultant will review draft and return the one copy with comments.

2. For equipment, or component parts of equipment put into service during construction and operated by Owner, submit completed documents within ten days after acceptance.

3. Submit one copy of completed documents 30 days prior to scheduled date of substantial completion.. This copy will be reviewed and returned, with Consultant comments. Revise content of all document sets as required prior to final submission.

4. Submit three digital copy in PDF file format on CD or DVD discs, and three paper sets of revised final documents in final form prior to date of Substantial Completion.

5. Either the draft copy or the final copy of the O&M manuals must be on the project site during any of the operator training scheduled for the project.

D. Warranties and Bonds:

1. For equipment or component parts of equipment put into service during construction with Owner's permission, submit documents within 10 days after acceptance.

2. Make other submittals within 10 days after Date of Substantial Completion, prior to final Application for Payment.

3. For items of Work for which acceptance is delayed beyond Date of Substantial Completion, submit within 10 days after acceptance, listing the date of acceptance as the beginning of the warranty period.

4. Submit three digital copies in PDF file format on CD or DVD discs, and [three] paper sets of final documents prior to date of Substantial Completion.

PART 2 PRODUCTS - NOT USED

PART 3 EXECUTION

3.01 PROJECT RECORD DOCUMENTS

A. Maintain on site one set of the following record documents; record actual revisions to the Work:

1. Drawings.

2. Specifications.

3. Addenda.

4. Change Orders and other modifications to the Contract.

B. Maintenance of documents and samples.

1. Store in Contractor's Field Office apart from Documents used for Construction.

2. Provide Files, Shelving and Cabinets necessary to safely and securely store Documents and Samples.

3. Maintain Documents in a clean, dry, legible, and good order.

4. Do not use Record Documents for Construction Purposes.

5. Make Documents available at all time for Consultant's inspection

C. Ensure entries are complete and accurate, enabling future reference by Owner.

D. Store record documents separate from documents used for construction.

E. Record information concurrent with construction progress.

F. Specifications: Legibly mark and record at each product section description of actual products installed, including the following:

1. Manufacturer's name and product model and number.

2. Product substitutions or alternates utilized.

3. Changes made by Addenda and modifications.

G. Record Drawings: Legibly mark each item to record actual construction including:

1. Measured depths of foundations in relation to finish first floor datum.

2. Measured horizontal and vertical locations of underground utilities and appurtenances, referenced to permanent surface improvements.

3. Measured locations of internal utilities and appurtenances concealed in construction, referenced to visible and accessible features of the Work.

4. Field changes of dimension and detail.

5. Details not on original Contract drawings.

3.02 OPERATION AND MAINTENANCE DATA

A. Source Data: For each product or system, list names, addresses and telephone numbers of Subcontractors and suppliers, including local source of supplies and replacement parts.

B. Product Data: Mark each sheet to clearly identify specific products and component parts, and data applicable to installation. Delete inapplicable information.

C. Drawings: Supplement product data to illustrate relations of component parts of equipment and systems, to show control and flow diagrams. Do not use Project Record Documents as maintenance drawings.

D. Typed Text: As required to supplement product data. Provide logical sequence of instructions for each procedure, incorporating manufacturer's instructions.

3.03 OPERATION AND MAINTENANCE DATA FOR MATERIALS AND FINISHES

A. For Each Product, Applied Material, and Finish:

1. Product data, with catalog number, size, composition, and color and texture designations.

2. Information for re-ordering custom manufactured products.

B. Instructions for Care and Maintenance: Manufacturer's recommendations for cleaning agents and methods, precautions against detrimental cleaning agents and methods, and recommended schedule for cleaning and maintenance.

C. Moisture protection and weather-exposed products: Include product data listing applicable reference standards, chemical composition, and details of installation. Provide recommendations for inspections, maintenance, and repair.

D. Additional information as specified in individual product specification sections.

E. Where additional instructions are required, beyond the manufacturer's standard printed instructions, have instructions prepared by personnel experienced in the operation and maintenance of the specific products.

F. Provide a listing in Table of Contents for design data, with tabbed fly sheet and space for insertion of data.

3.04 OPERATION AND MAINTENANCE DATA FOR EQUIPMENT AND SYSTEMS

A. In addition to requirements called for in other sections of this manual, provide the following:

B. For Each Item of Equipment and Each System:

1. Description of unit or system, and component parts.

2. Identify function, normal operating characteristics, and limiting conditions.

3. Include performance curves, with engineering data and tests.

4. Complete nomenclature and model number of replaceable parts.

C. Where additional instructions are required, beyond the manufacturer's standard printed instructions, have instructions prepared by personnel experienced in the operation and maintenance of the specific products.

D. Panelboard Circuit Directories: Provide electrical service characteristics, controls, and communications; typed.

E. Include color coded wiring diagrams as installed.

F. Operating Procedures: Include start-up, break-in, and routine normal operating instructions and sequences. Include regulation, control, stopping, shut-down, and emergency instructions. Include summer, winter, and any special operating instructions.

G. Maintenance Requirements: Include routine procedures and guide for preventative maintenance and trouble shooting; disassembly, repair, and reassembly instructions; and alignment, adjusting, balancing, and checking instructions.

H. Provide servicing and lubrication schedule, and list of lubricants required.

I. Include manufacturer's printed operation and maintenance instructions.

J. Include sequence of operation by controls manufacturer.

K. Provide original manufacturer's parts list, illustrations, assembly drawings, and diagrams required for maintenance.

L. Provide control diagrams by controls manufacturer as installed.

M. Provide Contractor's coordination drawings, with color coded piping diagrams as installed.

N. Provide charts of valve tag numbers, with location and function of each valve, keyed to flow and control diagrams.

O. Provide list of original manufacturer's spare parts, current prices, and recommended quantities to be maintained in storage.

P. Include test and balancing reports.

3.05 ASSEMBLY OF OPERATION AND MAINTENANCE MANUALS

A. Assemble operation and maintenance data into durable manuals for Owner's personnel use, with data arranged in the same sequence as, and identified by, the specification sections.

B. Where systems involve more than one specification section, provide separate tabbed divider for each system.

C. Prepare instructions and data by personnel experienced in maintenance and operation of described products.

D. Prepare data in the form of an instructional manual.

E. Digital O&M Manuals: In addition to binders described below, prepare manuals as PDF documents organized similar to the printed manuals. Copy to one or more properly labeled CD or DVD discs.

1. Searchable PDF files are preferred when possible. Table of Contents and any divider pages in these PDF files must be searchable.

2. Digital copies of O&M Manuals must be organized by section.

F. Paper & 3 Ring Binder O&M Manuals: Binders to be Wilson Jones #344 Series of equivalent, as approved by the Owner. Minimum ring size 1”. When multiple binders are used, correlate data into related consistent groupings. Do not overfill binders.

G. Cover: Identify each binder with typed or printed title OPERATION AND MAINTENANCE INSTRUCTIONS; identify title of Project; identify subject matter of contents.

H. Project Directory: Title and address of Project; names, addresses, and telephone numbers of Consultant, Consultants, Contractor and subcontractors, with names of responsible parties.

I. Tables of Contents: List every item separated by a divider, using the same identification as on the divider tab; where multiple volumes are required, include all volumes Tables of Contents in each volume, with the current volume clearly identified.

J. Dividers: Provide tabbed dividers for each separate product and system; identify the contents on the divider tab; immediately following the divider tab include a description of product and major component parts of equipment.

K. Text: Manufacturer's printed data, or typewritten data on 24 pound paper.

L. Drawings: Provide with reinforced punched binder tab. Bind in with text; fold larger drawings to size of text pages.

M. Arrangement of Contents: Organize each volume in parts as follows:

1. Project Directory.

2. Table of Contents, of all volumes, and of this volume.

3. Operation and Maintenance Data: Arranged by system, then by product category.

a. Source data.

b. Operation and maintenance data.

c. Field quality control data.

d. Original warranties and bonds.

3.06 WARRANTIES AND BONDS

A. Obtain warranties and bonds, executed in duplicate by responsible Subcontractors, suppliers, and manufacturers, within 10 days after completion of the applicable item of work. Except for items put into use with Owner's permission, leave date of beginning of time of warranty until Date of Substantial completion is determined.

B. Verify that documents are in proper form, contain full information, and when required have been are notarized.

C. Co-execute submittals when required.

D. Retain warranties and bonds until time specified for submittal.

E. Manual: Binders to be Wilson Jones #344 Series of equivalent, as approved by the Owner. Minimum ring size 1”. Do not overfill binders.

F. Cover: Identify each binder with typed or printed title WARRANTIES AND BONDS, with title of Project; name, address and telephone number of Contractor and equipment supplier; and name of responsible company principal.

G. Table of Contents: Neatly typed, in the sequence of the Table of Contents of the Project Manual, with each item identified with the number and title of the specification section in which specified, and the name of product or work item.

H. Separate each warranty or bond with index tab sheets keyed to the Table of Contents listing. Provide full information, using separate typed sheets as necessary. List Subcontractor, supplier, and manufacturer, with name, address, and telephone number of responsible principal.

3.07 EVIDENCE OF PAYMENTS & RELEASE OF LIENS

A. Contractor shall submit the following:

1. Contractor's Affidavit of Payment of Debts and Claims, AIA Document G-706 or equivilant form.

2. Contractor's Affidavit of Release of Liens, AIA Document G-706A or equivilant form, including the following:

   a. Consent of Contractor's Surety to Final Payment, AIA Document G-707, or equivilant form.

   b. Contractor's Release or Waiver of Liens.

   c. Separate releases or waivers of lien for Subcontractors, Suppliers, and others with lien rights against Owner's Property, together with list of those parties.

3. Duly sign and execute all Submittals, before delivery to Consultant.

3.08 CONTRACTOR'S CLOSEOUT SUBMITTALS TO CONSULTANT

A. Wage Certification: Section 00 7343 and 01 2000.

B. Building Official's Certificate of Mechanical & Electrical Inspections.

C. Building Official's Certificate of Occupancy.

3.09 SPARE PART & MAINTENANCE MATERIAL SUBMITTALS TO OWNER

A. All spare parts and extra material are to be delivered to the owner prior to the date of substantial completion. Provide written confirmation of delivery, noting quantity and description as well as storage location. Obtain written acceptance from Owner for receipt of stored items.

B. Specific Requirements: See Specifications Sections.

C. Products: Identical to those included in Project Work.

D. Storage Location: Where directed by Owner.

E. Required Submittals: See Specification Sections.

3.10 FINAL ADJUSTMENT OF ACCOUNTS

A. Submit final statement of accounting to Consultant, including the following:

1. Original Contract Sum.
2. Additions and deductions resulting from:
   a. Previous Change Orders.
   b. Adjustments to Cash Allowances
   c. Other adjustments.
   d. Deductions for uncompleted Work.
   e. Deductions for Reinspection Payments.
3. Total Contract Sum, as adjusted.
4. Previous Payments.
5. Sum remaining due.

B. Consultant will prepare and issue final Change Order, reflecting approved adjustments to Contract Sum not previously made by Change Orders.

3.11 FINAL APPLICATION FOR PAYMENT

A. Follow procedures specified in Section 01 2000.

END OF SECTION

PART 1 GENERAL

1.01 SUMMARY

A. Demonstration of products and systems to be commissioned and where indicated in specific specification sections.

B. Training of Owner personnel in operation and maintenance is required for:

1. All software-operated systems
2. HVAC systems and equipment
3. Plumbing equipment
4. Electrical systems and equipment
5. Conveying systems
6. Landscape irrigation
7. Items specified in individual product Sections

1.02 RELATED REQUIREMENTS

A. Section 01 7800 - Closeout Submittals: Operation and maintenance manuals

B. Other Specification Sections: Additional requirements for demonstration and training

1.03 SUBMITTALS

A. See Section 01 3000 - Administrative Requirements, for submittal procedures; except:

1. Make all submittals specified in this section, and elsewhere where indicated for commissioning purposes, directly to the Commissioning Authority
2. Submit one copy to the Commissioning Authority, not to be returned
3. Make commissioning submittals on time schedule specified by Commissioning Authority
4. Submittals indicated as "Draft" are intended for the use of the Commissioning Authority in preparation of overall Training Plan; submit in editable electronic format

B. Draft Training Plans: Owner will designate personnel to be trained; tailor training to needs and skill-level of attendees.

1. Submit to Commissioning Authority for review and inclusion in overall training plan.
2. Submit not less than four weeks prior to start of training.
3. Revise and resubmit until acceptable.
4. Provide an overall schedule showing all training sessions.
5. Include at least the following for each training session:

a. Identification, date, time, and duration.

b. Description of products and/or systems to be covered.

c. Name of firm and person conducting training; include qualifications.

d. Intended audience, such as job description.

e. Objectives of training and suggested methods of ensuring adequate training.

f. Methods to be used, such as classroom lecture, live demonstrations, hands-on, etc.

g. Media to be used, such a slides, hand-outs, etc.

h. Training equipment required, such as projector, projection screen, etc., to be provided by Contractor.

C. Training Manuals: Provide training manual for each attendee; allow for minimum of two attendees per training session.

1. Include applicable portion of O&M manuals.

2. Include copies of all hand-outs, slides, overheads, video presentations, etc., that are not included in O&M manuals.

3. Provide one extra copy of each training manual to be included with operation and maintenance data.

D. Training Reports:

1. Identification of each training session, date, time, and duration.

2. Sign-in sheet showing names and job titles of attendees.

3. List of attendee questions and written answers given, including copies of and references to supporting documentation required for clarification; include answers to questions that could not be answered in original training session.

4. Include Commissioning Authority's formal acceptance of training session.

E. Video Recordings: Submit digital video recording of each demonstration and training session for Owner's subsequent use.

1. Format: DVD Disc.

2. Label each disc and container with session identification and date.

1.04 QUALITY ASSURANCE

A. Instructor Qualifications: Familiar with design, operation, maintenance and troubleshooting of the relevant products and systems.

1. Provide as instructors the most qualified trainer of those contractors and/or installers who actually supplied and installed the systems and equipment.

2. Where a single person is not familiar with all aspects, provide specialists with necessary qualifications.

PART 2 PRODUCTS - NOT USED

PART 3 EXECUTION

3.01 DEMONSTRATION - GENERAL

A. Demonstrations conducted during system start-up do not qualify as demonstrations for the purposes of this section, unless approved in advance by Owner.

B. Demonstrations conducted during Functional Testing need not be repeated unless Owner personnel training is specified.

C. Demonstration may be combined with Owner personnel training if applicable.

D. Operating Equipment and Systems: Demonstrate operation in all modes, including start-up, shut-down, seasonal changeover, emergency conditions, and troubleshooting, and maintenance procedures, including scheduled and preventive maintenance.

1. Perform demonstrations not less than two weeks prior to Substantial Completion.

2. For equipment or systems requiring seasonal operation, perform demonstration for other season within six months.

E. Non-Operating Products: Demonstrate cleaning, scheduled and preventive maintenance, and repair procedures.

1. Perform demonstrations not less than two weeks prior to Substantial Completion.

3.02 TRAINING - GENERAL

A. Commissioning Authority will prepare the Training Plan based on draft plans submitted.

B. Conduct training on-site unless otherwise indicated.

C. Owner will provide classroom and seating at no cost to Contractor.

D. Do not start training until Functional Testing is complete, unless otherwise specified or approved by the Commissioning Authority.

E. Provide training in minimum two hour segments.

F. The Commissioning Authority is responsible for determining that the training was satisfactorily completed and will provide approval forms.

G. Training schedule will be subject to availability of Owner's personnel to be trained; re-schedule training sessions as required by Owner; once schedule has been approved by Owner failure to conduct sessions according to schedule will be cause for Owner to charge Contractor for personnel "show-up" time.

H. Review of Facility Policy on Operation and Maintenance Data: During training discuss:

1. The location of the O&M manuals and procedures for use and preservation; backup copies.

2. Typical contents and organization of all manuals, including explanatory information, system narratives, and product specific information.

3. Typical uses of the O&M manuals.

I. Product- and System-Specific Training:

1. Review the applicable O&M manuals.

2. For systems, provide an overview of system operation, design parameters and constraints, and operational strategies.

3. Review instructions for proper operation in all modes, including start-up, shut-down, seasonal changeover and emergency procedures, and for maintenance, including preventative maintenance.

4. Provide hands-on training on all operational modes possible and preventive maintenance.

5. Emphasize safe and proper operating requirements; discuss relevant health and safety issues and emergency procedures.

6. Discuss common troubleshooting problems and solutions.

7. Discuss any peculiarities of equipment installation or operation.

8. Discuss warranties and guarantees, including procedures necessary to avoid voiding coverage.

9. Review recommended tools and spare parts inventory suggestions of manufacturers.

10. Review spare parts and tools required to be furnished by Contractor.

11. Review spare parts suppliers and sources and procurement procedures.

J. Be prepared to answer questions raised by training attendees; if unable to answer during training session, provide written response within three days.

END OF SECTION

PART 1 — GENERAL

1.1 CONDITIONS AND REQUIREMENTS

A. The District will hire an independent third party Commissioning Authority (CA) to perform commissioning services for the HVAC systems as described within the provided drawings and specifications.

1.2 DESCRIPTION OF WORK

A. Commissioning is defined as the process of verifying that the installation and performance of selected building systems meet the specified design criteria and therefore satisfy the design intent and the Owner's operational needs. The Contractor shall be responsible for participation in the commissioning process as outlined below, and in subsequent sectional references and attachments throughout the project documents. Commissioning procedures will be designed and coordinated under the direction of a CA. The CA shall be a totally independent firm under contract directly with the Owner or Owner's Representative, and shall not be contractually or otherwise financially associated with either the Design Team or any Contractor performing work on this project. The CA shall be directly responsible to the Owner and/or Owner's Representative.

B. The CA, at the completion of the commissioning process shall submit the final Commissioning report indicating that all tested controls system are operating per the engineers intent. All units or systems requiring re-testing becaue of initial failures shall be included in the final report. Submitted documentation includes the completed Functional Performance Tests, Functional Performance Test Procedures,–Issues Logs, trend analaysis, TAB analysis and any other documents as detailed in the commissioning plan and normally associated with commissioning Submit the completed documented commissioning acceptance logs and the detailed for each piece of equipment and interactive control system.

C. The Contractor responsible for completion of the work within the sections as listed below under 9100, 1.3.A., shall have specific responsibilities relating to demonstrating the equipment and systems provided have been installed and function per the specifications as defined in the project contract documents. These responsibilities are as follows:

1. Prior to the initial Commissioning Coordination Meeting, the Contractor shall submit for approval the name and professional qualifications of one individual who shall represent the Contractor and sub contractors when dealing with issues related to the commissioning process on this project. In matters related to commissioning, this person shall be referred to as the Contractor's Commissioning Coordinator and shall be responsible for communicating commissioning related issues to relevant members of the Contractor's team. This person shall be responsible for the oversight of all required contractor start-up and testing procedures. This person shall be responsible for collection, review and forwarding to the CA of start-up, testing and commissioning related documentation as required to be provided by the Contractor and their sub contractors. This person shall be responsible for maintenance and updating the site version of the Commissioning Plan binder, as provided by the Commissioning Authority.

2. It will be the responsibility of the Contractor's Commissioning Coordinator to schedule coordination meetings with the CA, the Controls Contractor, and all sub-contractors have responsibility with any portion of the these meetings and associated tasks are to be included in the project schedule as early in the

construction process as possible. These meetings and tasks to include, Sequence of Operation review and approval, Programming steps, Test and Balance for air and water systems, start-up by equipment type, Point-to Point verification for each piece of equipment and Functional Performance testing.

3. It is the Contractor's specific responsibility to complete and document their respective start-up and checkout procedures per the project documents and to insure the complete readiness of equipment and systems prior to the start of the functional performance-testing phase of the commissioning process.

4. The Contractor shall provide written confirmation of system readiness for functional performance testing, in the form of a Contractor's System Readiness Checklist provided by the CA. The Contractor shall complete, sign and return these forms and any required supporting installation and start-up documentation as an indication of compliance with all specified work.

5. Once the CA is provided with written confirmation (Contractor's System Readiness Checklist) of related systems completion, the actual date and times for the functional performance testing phase will be confirmed. The Contractor shall be prepared at this time to demonstrate system performance to the Commissioning Authority through completion of the functional performance testing process. The Contractor shall be required to use test procedures and data entry forms as approved or provided by the CA. The CA is to develop with the Owner's Representative the performance testing criteria as required on this project.

6. The Contractor shall be responsible for providing qualified representatives, material, equipment, tools, etc., required within the scope of their specialty, to facilitate successfully completing the functional performance testing process. The Contractor shall budget and provide sufficient time and qualified personnel to participate on-site in this process until the process is successfully completed and all issues have been corrected or otherwise resolved.

1.3 RELATED WORK

A. The following sections will include start-up, testing and/or commissioning related activities.

General Mechanical Requirements
Balancing of Air Systems
Mechanical Piping
HVAC Ducts
HVAC Equipment
HVAC Piping and Pumps
Building Controls

1.4 DEFINITION OF TERMS

A. The Commissioning Plan is a detailed document prepared and maintained by the CA that defines the entire commissioning process. The Commissioning Plan includes the following:

1. Project overview.

2. A complete list and description of all equipment and systems to be commissioned.

3. Contractor's System Readiness Checklists.

4. Review of the Sequence of Operation for all controlled equipment

5. Review of all Test and Balance reports

6 Complete review of all trend information for a period of at leat seven days

7. Equipment manufacturer's startup procedures and associated checklists.

8. CA installation verification data forms for systems and equipment to be commissioned.

9. Functional performance test criteria, test forms and data forms for systems and equipment designated to be functionally tested .

10. The Commissioning Issues List

11. Training verification plan

B. Contractor's System Readiness Checklist: These checklists are provided by the CA and include equipment installation and start-up items specified to be performed by the Contractor. These checklists shall be completed by the Contractor and returned to the CA prior to the final CA installation verification and functional performance testing process. Actual checklists shall be provided to the Contractor once all equipment submittals have been approved by the Design Engineer of record.

C. Manufacturer's Startup Checklists: These checklists are generally provided by the equipment manufacturer as part of the manufacturer's recommended installation and start-up documentation included with the equipment. The Contractor shall complete and provide all such forms to the CA.

D. CA Final Installation Verification Process: This process includes the on-site review of related system components for conformance to the Project Documents. The CA will conduct this review and verify system readiness for final functional testing procedures upon receipt of the Contractor completed Contractor's System Readiness Checklists. The CA will document issues identified during this process and assign them to the appropriate party for resolution.

E. Final Functional Performance Testing Process: This process includes the documented testing of system parameters, under actual or simulated operating conditions. Final performance of systems will begin only after the Contractor certifies that systems and controls are 100% complete and ready for functional testing. Contractors will be required to schedule, coordinate and participate in functional performance test procedures as defined by the CA and presented in the Commissioning Plan. The CA will participate in all

functional tests and document issues discovered through the functional testing process for resolution by the appropriate party.

F. Commissioning Issues List: This list created by the CA, includes the description of all concerns discovered as a result of the commissioning process. This list also includes the current status of issues, assignment to the responsible party and the date of final resolution as confirmed by the CA. Items listed may include issues where design, products, execution or performance does not appear to satisfy the Project Contract Documents and/or the design intent. The resolution of issues identified on this list may or may not be the responsibility of the Contractor.

G. Back-Checking: Back-Checking is the process of verifying that commissioning related issues have been resolved. The back-checking process takes place once the commissioning issues list has been returned by the Contractor with signatures indicating that all commissioning issues assigned to the Contractor have been resolved. Excessive back-checking by the CA is subject to back-charges to the Contractor per 01 9100, 1.7, Back-Charges.

H. Performance Period: The performance period is a set length of time designated to demonstrate proper facility operation prior to acceptance. The performance period commences after successful completion of all functional testing. Parameters evaluated typically include zone temperature stability, optimum start/stop, warm-up period and other related functions.

I. Off-Season Testing: This testing is completed during seasonal temperature conditions opposite of those when initial functional testing took place. The tests are a limited sub-set of the original tests and are designed to evaluate capacity and interrelationships of systems. The level of off-season testing is dependent on the seasonal conditions encountered during testing, the CA's scope of work and other factors. Requirements for off-season testing for this project may be required. Contractors will be required to participate in this process as needed to complete the tests.

J. Final Commissioning Report: This report includes the overall final commissioning document, prepared by the Commissioning Authority, which details the actual commissioning procedures performed, inspection and testing results, TAB analysis and Trend report analysis. The final version of the Commissioning Issues List, indicating that all issues discovered through the commissioning process have been verified as resolved or otherwise accounted for to the satisfaction of the owner.

K. Project Contract Documents: These documents include all contract specifications, drawings, addenda as provided by the design team for the purposes of bidding and completing the project.

L. Initial Commissioning Coordination Meeting: This meeting is intended to present the Commissioning Plan to the Contractor and is typically scheduled to occur after bid award and prior to installation of commissioned systems.

1.5 CONSTRUCTION PHASE COMMISSIONING PROCESS OVERVIEW

A. As soon as possible after the bid award and approval of all mechanical and electrical submittals, the Commissioning Authority will conduct a pre-installation commissioning coordination meeting with the Contractors, Owner's Representative and the Design Team. The CA will explain the commissioning process in detail, and identify specific commissioning related responsibilities. The preliminary commissioning plan provided at

this time will include the final versions of the Contractor's System Readiness Checklists and a list of the equipment to be commissioned. Due dates will be set at that meeting for the proposed contractor start-up and testing forms, preliminary O&M manuals, training agendas and other approved submittals needed to complete the plan. The final plan will be developed, including both CA and contractor checklists and testing, after the CA receives all submittals from the Contractor and design team.

B. Commissioning status meetings shall be scheduled to occur during the construction and closeout phase to monitor progress and to help facilitate the commissioning process. Contractor representatives for commissioned systems shall be required to attend these meetings. Meetings will generally be scheduled to occur with scheduled construction or management meetings.

C. Once the Contractor has provided the CA with written verification (Contractor's System Readiness Checklists) indicating completion of installation procedures, the Commissioning Authority will conduct a final on-site inspection and system readiness review of the specific systems and equipment to be commissioned. Issues noted during this process will be documented by the CA in the Commissioning Issues List.

D. Upon confirmation of system readiness and receipt of the balancing (TAB) report, the Contractor and the Owner will run trends on all points for at least 7 consecutive days and provide the trend data in Excel format to the CA for analysis

E. After the completion of the trend data collection, the CA will schedule with the Contractor to perform functional performance tests, as appropriate, to verify functional compliance with the Project Documents. Functional testing will not commence until all critical issues identified during the Installation Verification Process are resolved. The Commissioning Authority will oversee the Functional Performance Testing Process and will provide or approve the format and documentation for these tests. Scheduled test activities not executed because of lack of preparation or coordination by the Contractor are subject to back-charges to the Contractor per 1.7, Back-Charges.

F. Issues noted during the functional performance tests will be documented by the CA. When easily corrected, issues will be resolved at the time of discovery. The appropriate Contractor will resolve all other issues at a later time. Issues will be tracked by issue number, responsible party, and status and activity date. The Contractor shall be responsible for reporting, in writing, to the CA when issues have been resolved so that the CA can verify the resolution.

G. Training on related systems and equipment operation and maintenance shall only be scheduled to commence after commissioning is satisfactorily completed, O&M manuals have been delivered, and systems are verified to be 100% complete and functional. Each Contractor is responsible to provide a topical outline of all subjects to be covered in the training session(s), the expected length of time for the training sessions, and a brief resume listing the qualifications of the proposed training presenters. Training will be coordinated with the Owner.

H. The construction phase commissioning process will be complete when all noted issues have been corrected, proved to be in compliance with the Project Documents or otherwise resolved to the satisfaction of the Owner.

I. Training on related systems and equipment operation and maintenance shall only be scheduled to commence after commissioning is satisfactorily completed, O&M manuals have been delivered, and systems are verified to be 100% complete and functional.

Each Contractor is responsible to provide a topical outline of all subjects to be covered in the training session(s), the expected length of time for the training sessions, and a brief resume listing the qualifications of the proposed training presenters. Training will be coordinated with the Owner.

The Contractor is responsible for providing the CA with copies of all balancing reports, as-built drawings and O&M manuals relevant to the systems commissioned. The CA will review this material for compliance with Project Documents and will note and report all issues for resolution by the responsible party.

When seasonal testing is required by the Project Documents, testing will be conducted by the CA in the opposite season from original commissioning. The Contractor is responsible to support seasonal testing and resolve contractor related issues discovered.

J. Upon completion of all commissioning activities the CA will prepare and submit to the owner the Final Commissioning Report detailing the commissioning plan and all commissioning activities.

1.6 BACK-CHARGING

A. The Contractor is responsible for scheduling and coordinating testing and demonstration activities with the CA. The Contractor shall be back-charged for all additional expenses incurred by the CA as a result of scheduled testing and demonstration activities that are not executed because of lack of preparation or coordination by the Contractor.

B. The CA will document all potential deficiencies on the Commissioning Issues List for resolution by the Contractor. Upon receipt of the signed-off issues list, the CA will back-check these issues on a <u>one-time-per-issue basis</u> to verify they have been corrected by the Contractor. In the event that an issue previously signed-off as corrected by the Contractor fails to meet the criteria as set forth in the Commissioning Plan and Project Documents, the Contractor is subject to back-charges.

C. The Contractor shall reimburse the Owner for all costs associated with any additional efforts required to witness installation, start-ups, testing activities or for excessive back-checking as indicated above. These costs shall include salary, travel costs and per diem lodging costs (where applicable) for the Commissioning Authority. Rates to be used are TDB as per Contract Agreement with CA.

1.7 SYSTEMS TO BE COMMISSIONED

A. The following sytems will be commissioned as part of this project:

HVAC and associated controls

1.8 OWNER'S RESPONSIBILITIES

A. Ensure the participation of owner's chosen representatives as required to complete the commissioning process.

B. Provide the basis of design and contruction documentation to CA for information and use.

C. Assign O&M personnel and schedule them to participate in the commissioning team activities, as required.

1.9 ARCHITECT/ENGINEER'S RESPONSIBILITIES

A. Review the commissioning documentation and provide comments as necessary to the CA and the Owner or Owner's Representative.

B. The Architect shall ensure the participation of necessary representatives from the design team as required to complete the commissioning process. Design team members will be expected to provide prompt replies to commissioning review reports and RFI requests issued during the commissioning process. RFI's and ASI's pertaining to the equipment to be commissioned shall be transmitted to the CA for review and comments.

Participate in determination of final controls sytem input/output points list and sequences of operation as required to complete functional test procedures with the Owner's Representative, CA, and Controls Contractor.

1.10 CONTRACTORS' RESPONSIBILITIES

A. Contractor, all subcontractors, and all sub-subcontractors shall assign representatives with expertise and authority to act on its behalf and shall ensure that they are familiar with all requirements noted in this section. All parties shall execute all commissioning responsibilities assigned to them in the contract documents. Contractor must schedule time for, participate in, and perform commissioning process activities including, but no limited to, the following:

1. Evaluate commissioning issues identified in test reports or observation reports, in collaboration with entitiy responsible for system and equipment installation, recommend corrective action.

2. Cooperate with the CA for resolution of issues recorded in the commissioning issues log.

3. Attend commissioning meetings, to include a commissioning scoping kickoff meeting and other meetings, as required to facilitate the commissioning process.

4. Integrate and coordinate commissioning process, critical commissioning tasks, milestones, and testing activities with construction schedule. The schedule is to identify, the completion of all contractor pre-functional checklists, preliminary TAB report, DDC point verification, and functional performance testing indicated in the specification.

5. Provide a copy of the O&M manuals and submittals of commissioned equipment, to the CA for review and approval.

6. Review and accept pre-functional checklists provided by the CA.

7. Review and accept functional performance test procedures provided by the CA.

8. Complete and/or ensure that your subcontractors complete all required commissioned forms.

1.11 COMMISSIONING AUTHORITY'S RESPONSIBILITIES

A. Organize and lead the commissioning team.

B. Provide commissioning plan with list of commissioned equipment and systems.

C. Provide commissioning related specifications, submittals, and construction documents.

D. Review and approve training curriculum as developed by the contractor(s).

E. Develop detailed and specific pre-functional checklists, and functional performance testing procedures for equipment and systems to be commissioned.

F. Coordinate commissioning meetings as necessary to facilitate the commissioning process, maintain the project commissioning schedule and resolve identified issues. Provide meeting notes to commissioning team for review and comment.

G. Review TAB plan and reports.

H. Review DDC plan and submittal. Spot-check and witness the DDC point-to-point checkouts, graphic displays at the DDC workstation. All written sequences will be functionally tested and demonstrated to theca by the Controls Contractors.

I. Perform site observations and verify contractor readiness for the functional testing process.

J. Verify the execution of commissioning process activities using random sampling method. Verification will include, but is not limited to, equipment submittals, completed pre-functional checklists, testing and balancing mesurements, and functional performance testing results.

K. Prepare and maintain the commissioning issues log.

L. Prepare and maintain completed pre-functional checklists and equipment startup checklists.

M. Witness contractor-performed systems, assemblies, and component startup, when possible.

N. Retain all commissioned documentation from the contractor's start-up forms, building flush-out verification, pipework flushing and chemical clearning, testing and balancing data, functional performance testing, and commissioning issues list.

O. Provide the Owner with a final commissioning report to document the process and to verify that the commissioning process has been completed.

P. Review O&M documentation for commissioning information completeness.

PART 2 — PRODUCTS

2.1 CONTRACTOR INSTALLATION VERIFICATION CHECKLISTS

A. The Contractor shall be responsible for maintaining and completing copies of the Contractor's System Readiness Checklist forms as provided by the CA. Final checklists will be created based on actual submittal data and equipment lists. Checklist forms and supporting documents shall be signed by the Contractor and returned to the CA upon completion of all listed items.

B. The checklist forms provided at the end of this section are not intended to list every requirement of the Project Contract Documents. Completion of these checklist items shall in no way release the Contractor from their responsibility to complete other specified requirements of the Project Contract Documents.

2.2 EQUIPMENT MANUFACTURER'S STARTUP FORMS

A. Any installation and start-up checklists that are provided by the equipment or system manufacturer shall be submitted to the CA for review and approval at the same time as the standard equipment submittal documentation is provided to the Design Team. The approved startup documentation shall be completed by the responsible Contractor during startup and a copy of the completed document shall be given to the CA for review and inclusion within the Final Commissioning Report.

2.3 FUNCTIONAL TEST FORMS

A. In addition to the testing requirements, wherever the Project Documents require testing, test reports, checklists, verifying operation, demonstrating proper operation or other similar language, written testing procedures and documentation of tests will be required from the Contractor.

B. The Contractor shall submit all proposed test documents to the CA for approval prior to conducting tests. The CA will advise and assist the Contractor with test form development if requested.

2.4 PROJECT CLOSE-OUT CHECKLIST

A. The Contractor shall complete and sign the Project Closeout Checklist (draft version in Appendix "A"), to indicate completion of Contractor's specified responsibilities regarding: arrangements for post-construction testing, spare parts for owner, final O&M manuals, as-built documents, O&M training, performance testing, indoor air quality testing and any other requirements that occur just prior to owner acceptance of the project.

PART 3 — EXECUTION

3.1 DOCUMENTATION

A. All checklists, start-up documentation, test forms and other commissioning related documentation required by contract shall be neatly completed and provided to the CA in a clear and easily readable condition.

B. All required checklists, start-up documentation, test forms and other commissioning related documentation shall be provided to the CA in a timely fashion and according to the commissioning and construction schedule.

C. If the project is phased, Contractor shall complete and submit documentation as if each phase were a separate project.

D. In every case where the Contractor is unable to comply with an item as listed on the checklist or form, the Contractor shall immediately notify the CA in writing as to the reasons for non-compliance.

3.2 INSTALLATION VERIFICATION

A. Contractor shall inspect installed equipment and systems. Contractor shall complete and return the Contractor System Readiness Checklists as an indication of completion of all installation requirements as specified in the Project Contract Documents.

B. After all Contractor's System Readiness Checklists are received from the Contractor, the CA will conduct final installation verifications on selected systems. Discrepancies discovered will be reported on the Commissioning Issues List.

3.3 FUNCTIONAL PERFORMANCE TESTS

A. Functional performance testing of shall begin after all critical issues discovered during the installation verification process have been corrected. The CA and Contractor shall conduct functional performance tests on selected systems to demonstrate and verify functional performance criteria as outlined by the CA and as required in the Project Contract Documents. Discrepancies discovered will be reported by the CA on the Commissioning Issues List.

B. In addition to participating in functional tests developed by the CA, the Contractor shall be required to complete all start-up and testing procedures as specified elsewhere in the Project Contract Documents.

3.4 DDC SYSTEM TRENDING REVIEW

A. Trending is a method of testing as a method to augment manual functional testing. The Contractor shall trend all physical inputs and outputs with specified soft variables at intervals provided by the CA.

B. The contractor shall provide graphical trending through the DDC control system. Trending requirements shall be provided by the CA. The graphical plots shall be provided with a dual y-axis allowing 5 or more trend points plotted simultaneously on the graph with each series in distinct color. If this cannot be sufficiently accomplished directly in the DDC control syste, then it is responsibility of the Controls Contractor to provide required csv trending files at specified trending intervals provided by the CA.

3.5 ISSUE CORRECTION

A. Once issues have been identified and assigned to a Contractor on the Commissioning Issues List, the Contractor shall be required to investigate and resolve these issues in a timely manner. After correcting issues noted on the Commissioning Issues List, the Contractor shall sign off on each issue and return the list to the CA.

3.6 PERFORMANCE PERIOD

A. The CA may prepare a performance period test plan including measured variables and success criteria based on performance characteristics described in the Project Documents. The CA will provide the Control System Contractor with list of required trend log definitions to be implemented as a basis for reviewing performance during this period.

B. The Contractor will review the performance period test plan and set up the trend log definitions from the CA. The trending shall be provided by the Contractor in both a text and graphic format with related system parameters grouped together for easy comparison. If DDC system resident memory is limited or there are other issues with the trending

requirements, the Contractor will notify the CA and request the CA redefine the test plan.

C. The performance period will commence within one week of the final functional tests and run for a minimum of 5 days. If failures are encountered, the performance period shall be aborted. After corrections are made, the performance period shall be re-started at day one.

3.7 SYSTEM ACCEPTANCE

A. Specified training on related systems and equipment operation and maintenance shall only commence after final performance testing is successfully completed, and systems are verified by the CA to be 100% complete and functional.

B. Equipment and systems shall not be accepted by the Owner and final payment shall not be made by the Owner until all commissioning activities are complete and the performance period standards have been met.

(PROJECT CLOSE-OUT CHECKLIST TO FOLLOW IN APPENDIX "A")

APPENDIX A

Project Closeout

Contractor's Closeout Checklist

Instructions:

Contractor shall complete all specified items as listed on the following checklist and return the signed checklist to the Commissioning Authority prior to final project completion.

Project Closeout Checklist:

- ☐ Training agendas, schedules and qualifications of trainers have been provided to the Owner for review prior to the start of training.
- ☐ Training has been completed in compliance with specifications.
- ☐ O&M Manuals are complete and submitted.
- ☐ Warranties have been provided to Owner.
- ☐ Record drawings have been updated as-built.
- ☐ Required spares have been submitted to owner and receipt of materials signed.
- ☐ Contractor considers all specified close-out requirements to be complete.

Please note: This checklist is not intended to represent all the requirements of the Project Documents within this section. Completion of the items on this checklist does not release the contractor from their contractual obligation to complete all the work as detailed within the entire specification section.

Signed: _____ Date: _____

Company: _____

END OF SECTION

PROJECT MANUAL

WILLOW WIND RENOVATIONS

1497 E. MAIN ST, ASHLAND, OR 97520

ASHLAND SCHOOL DISTRICT NO. 5
885 SISKIYOU BLVD
ASHLAND OR 97520

100% DESIGN DEVELOPMENT
FEBRUARY 1, 2021

arkitek: design & architecture
christopher brown, AIA
426 a street suit 101
ashland, oregon 97520

REGISTERED ARCHITECT
CHRISTOPHER PLUMMER BROWN
5027
ASHLAND, OREGON
STATE OF OREGON

HMK COMPANY

Ashland School District
inspiring learning for life...

TABLE OF CONTENTS

DIVISION 10 - SPECIALTIES

10 1400	SIGNAGE
10 2600	WALL AND DOOR PROTECTION
10 2800	TOILET, BATH, AND LAUNDRY ACCESSORIES
10 5129	PHENOLIC LOCKERS

DIVISION 21 - 28 *****DESIGN/BUILD BY SUBCONTRACTOR*****

SECTION 02 4100
DEMOLITION

PART 1 GENERAL

1.01 SECTION INCLUDES

A. Selective demolition of built site elements.

B. Selective demolition of building elements for alteration purposes.

1.02 RELATED REQUIREMENTS

A. Section 01 1000 - Summary: Limitations on Contractor's use of site and premises.

B. Section 01 1000 - Summary: Sequencing and staging requirements.

C. Section 01 1000 - Summary: Description of items to be salvaged or removed for re-use by Contractor.

D. Section 01 5000 - Temporary Facilities and Controls: Site fences, security, protective barriers, and waste removal.

E. Section 01 6000 - Product Requirements: Handling and storage of items removed for salvage and relocation.

F. Section 01 7000 - Execution and Closeout Requirements: Project conditions; protection of bench marks, survey control points, and existing construction to remain; reinstallation of removed products; temporary bracing and shoring.

G. Section 31 2323 - Fill: Fill material for filling holes, pits, and excavations generated as a result of removal operations.

1.03 REFERENCE STANDARDS

A. 29 CFR 1926 - U.S. Occupational Safety and Health Standards current edition.

1.04 SUBMITTALS

A. See Section 01 3000 - Administrative Requirements, for submittal procedures.

B. Site Plan: Showing:
   1. Areas for temporary construction and field offices.
   2. Areas for temporary and permanent placement of removed materials.

C. Demolition Plan: Submit demolition plan as specified by OSHA and local authorities.
   1. Indicate extent of demolition, removal sequence, bracing and shoring, and location and construction of barricades and fences.
   2. Identify demolition firm and submit qualifications.

PART 3 EXECUTION

3.01 SCOPE

A. Remove portions of existing buildings in the following sequence:

B. Remove paving and curbs as required to accomplish new work.

C. Remove other items indicated, for salvage, relocation, and recycling.

D. Fill excavations, open pits, and holes in ground areas generated as result of removals, using specified fill; compact fill as specified in Section 31 2200.

3.02 GENERAL PROCEDURES AND PROJECT CONDITIONS

A. Comply with applicable codes and regulations for demolition operations and safety of adjacent structures and the public.
   1. Obtain required permits.
   2. Take precautions to prevent catastrophic or uncontrolled collapse of structures to be removed; do not allow worker or public access within range of potential collapse of unstable structures.
   3. Provide, erect, and maintain temporary barriers and security devices.

4. Conduct operations to minimize effects on and interference with adjacent structures and occupants.
5. Do not close or obstruct roadways or sidewalks without permit.
6. Conduct operations to minimize obstruction of public and private entrances and exits; do not obstruct required exits at any time; protect persons using entrances and exits from removal operations.
7. Obtain written permission from owners of adjacent properties when demolition equipment will traverse, infringe upon or limit access to their property.

B. Do not begin removal until receipt of notification to proceed from Owner.

C. Protect existing structures and other elements that are not to be removed.
1. Provide bracing and shoring.
2. Prevent movement or settlement of adjacent structures.
3. Stop work immediately if adjacent structures appear to be in danger.

D. If hazardous materials are discovered during removal operations, stop work and notify Architect and Owner; hazardous materials include regulated asbestos containing materials, lead, PCB's, and mercury.

E. Partial Removal of Paving and Curbs: Neatly saw cut at right angle to surface.

3.03 **SELECTIVE DEMOLITION FOR ALTERATIONS**

A. Drawings showing existing construction and utilities are based on casual field observation and existing record documents only.
1. Verify that construction and utility arrangements are as indicated.
2. Report discrepancies to Architect before disturbing existing installation.
3. Beginning of demolition work constitutes acceptance of existing conditions that would be apparent upon examination prior to starting demolition.

B. Maintain weatherproof exterior building enclosure except for interruptions required for replacement or modifications; take care to prevent water and humidity damage.

C. Remove existing work as indicated and as required to accomplish new work.
1. Remove rotted wood, corroded metals, and deteriorated masonry and concrete; replace with new construction specified.
2. Remove items indicated on drawings.

D. Services (Including but not limited to HVAC, Plumbing, Fire Protection, Electrical, and Telecommunications): Remove existing systems and equipment as indicated.
1. Maintain existing active systems that are to remain in operation; maintain access to equipment and operational components.
2. Where existing active systems serve occupied facilities but are to be replaced with new services, maintain existing systems in service until new systems are complete and ready for service.
3. Verify that abandoned services serve only abandoned facilities before removal.
4. Remove abandoned pipe, ducts, conduits, and equipment, including those above accessible ceilings; remove back to source of supply where possible, otherwise cap stub and tag with identification.

E. Protect existing work to remain.
1. Prevent movement of structure; provide shoring and bracing if necessary.
2. Perform cutting to accomplish removals neatly and as specified for cutting new work.
3. Repair adjacent construction and finishes damaged during removal work.
4. Patch as specified for patching new work.

3.04 **DEBRIS AND WASTE REMOVAL**

A. Remove debris, junk, and trash from site.

B. Leave site in clean condition, ready for subsequent work.

C. Clean up spillage and wind-blown debris from public and private lands.

END OF SECTION

SECTION 03 0516
UNDERSLAB VAPOR BARRIER

PART 1 GENERAL

1.01 SECTION INCLUDES

A. Sheet vapor barrier under concrete slabs on grade.

1.02 RELATED REQUIREMENTS

A. Section 03 3000 - Cast-in-Place Concrete: Preparation of subgrade, granular fill, placement of concrete.

1.03 REFERENCE STANDARDS

A. ASTM E1643 - Standard Practice for Selection, Design, Installation and Inspection of Water Vapor Retarders Used in Contact with Earth or Granular Fill Under Concrete Slabs 2018a.

B. ASTM E1745 - Standard Specification for Plastic Water Vapor Retarders Used in Contact with Soil or Granular Fill under Concrete Slabs 2017.

1.04 SUBMITTALS

A. See Section 01 3000 - Administrative Requirements, for submittal procedures.

B. Product Data: Submit manufacturers' data on manufactured products.

C. Samples: Submit samples of underslab vapor barrier to be used.

D. Manufacturer's Installation Instructions: Indicate installation procedures and interface required with adjacent construction.

PART 2 PRODUCTS

2.01 MATERIALS

A. Underslab Vapor Barrier:
   1. Water Vapor Permeance: Not more than 0.010 perms (0.6 ng/(s m2 Pa)), maximum.
   2. Thickness: 15 mils (0.4 mm).
   3. Basis of Design:
      a. Stego Industries LLC; Stego Wrap Vapor Barrier (15-mil): www.stegoindustries.com/#sle.

B. Accessory Products: Vapor barrier manufacturer's recommended tape, adhesive, mastic, etc., for sealing seams and penetrations in vapor barrier.

PART 3 EXECUTION

3.01 INSTALLATION

A. Install vapor barrier in accordance with manufacturer's instructions and ASTM E1643.

B. Install vapor barrier under interior slabs on grade; lap sheet over footings and seal to foundation walls.

C. Lap joints minimum 6 inches (150 mm).

D. Seal joints, seams and penetrations watertight with manufacturer's recommended products and follow manufacturer's written instructions.

E. No penetration of vapor barrier is allowed except for reinforcing steel and permanent utilities.

F. Repair damaged vapor retarder before covering with other materials.

END OF SECTION

SECTION 03 3000
CAST-IN-PLACE CONCRETE

PART 1 GENERAL

1.01 SECTION INCLUDES

A. Concrete formwork.

B. Floors and slabs on grade.

C. Concrete reinforcement.

D. Joint devices associated with concrete work.

E. Concrete curing.

1.02 RELATED REQUIREMENTS

A. Section 07 9200 - Joint Sealants: Products and installation for sealants and joint fillers for saw cut joints and isolation joints in slabs.

1.03 REFERENCE STANDARDS

A. ACI 117 - Specifications for Tolerances for Concrete Construction and Materials 2010 (Reapproved 2015).

B. ACI 211.1 - Standard Practice for Selecting Proportions for Normal, Heavyweight, and Mass Concrete 1991 (Reapproved 2009).

C. ACI 301 - Specifications for Structural Concrete 2016.

D. ACI 302.1R - Guide to Concrete Floor and Slab Construction 2015.

E. ACI 304R - Guide for Measuring, Mixing, Transporting, and Placing Concrete 2000 (Reapproved 2009).

F. ACI 305R - Guide to Hot Weather Concreting 2010.

G. ACI 306R - Guide to Cold Weather Concreting 2016.

H. ACI 308R - Guide to External Curing of Concrete 2016.

I. ACI 318 - Building Code Requirements for Structural Concrete and Commentary 2014 (Errata 2018).

J. ACI 347R - Guide to Formwork for Concrete 2014, with Errata (2017).

K. ASTM A615/A615M - Standard Specification for Deformed and Plain Carbon-Steel Bars for Concrete Reinforcement 2020.

L. ASTM A1064/A1064M - Standard Specification for Carbon-Steel Wire and Welded Wire Reinforcement, Plain and Deformed, for Concrete 2018a.

M. ASTM C33/C33M - Standard Specification for Concrete Aggregates 2018.

N. ASTM C94/C94M - Standard Specification for Ready-Mixed Concrete 2020.

O. ASTM C109/C109M - Standard Test Method for Compressive Strength of Hydraulic Cement Mortars (Using 2-in. or (50-mm) Cube Specimens) 2020a.

P. ASTM C150/C150M - Standard Specification for Portland Cement 2020.

Q. ASTM C1602/C1602M - Standard Specification for Mixing Water Used in the Production of Hydraulic Cement Concrete 2012.

R. ASTM E1155 - Standard Test Method for Determining F(F) Floor Flatness and F(L) Floor Levelness Numbers 2014.

S. ASTM E1155M - Standard Test Method for Determining F(F) Floor Flatness and F(L) Floor Levelness Numbers (Metric) 2014.

T. ASTM E1643 - Standard Practice for Selection, Design, Installation and Inspection of Water Vapor Retarders Used in Contact with Earth or Granular Fill Under Concrete Slabs 2018a.

U. ASTM E1745 - Standard Specification for Plastic Water Vapor Retarders Used in Contact with Soil or Granular Fill under Concrete Slabs 2017.

1.04 **SUBMITTALS**

A. See Section 01 3000 - Administrative Requirements, for submittal procedures.

B. Product Data: Submit manufacturers' data on manufactured products showing compliance with specified requirements and installation instructions.

C. Mix Design: Submit proposed concrete mix design.

D. Samples: Submit samples of underslab vapor retarder to be used.

E. Test Reports: Submit report for each test or series of tests specified.

F. Project Record Documents: Accurately record actual locations of embedded utilities and components that will be concealed from view upon completion of concrete work.

1.05 **QUALITY ASSURANCE**

A. Perform work of this section in accordance with ACI 301 and ACI 318.

B. Follow recommendations of ACI 305R when concreting during hot weather.

C. Follow recommendations of ACI 306R when concreting during cold weather.

PART 2 PRODUCTS

2.01 **FORMWORK**

A. Formwork Design and Construction: Comply with guidelines of ACI 347R to provide formwork that will produce concrete complying with tolerances of ACI 117.

B. Form Materials: Contractor's choice of standard products with sufficient strength to withstand hydrostatic head without distortion in excess of permitted tolerances.

1. Form Facing for Exposed Finish Concrete: Contractor's choice of materials that will provide smooth, stain-free final appearance.
2. Form Ties: Cone snap type that will leave no metal within 1-1/2 inches (38 mm) of concrete surface.

2.02 **REINFORCEMENT MATERIALS**

A. Reinforcing Steel: Per Structural Engineering Design

2.03 **CONCRETE MATERIALS**

A. Cement: Per Structural Engineering Design

B. Fine and Coarse Aggregates: Per Structural Engineering Design

C. Water: Per Structural Engineering Design

2.04 **ADMIXTURES**

A. Per Structural Engineering Design

2.05 **ACCESSORY MATERIALS**

A. Underslab Vapor Retarder: As specified in Section 03 0516

2.06 **BONDING AND JOINTING PRODUCTS**

2.07 **CURING MATERIALS**

A. Per Structural Engineering Design

2.08 **CONCRETE MIX DESIGN**

A. Per Structural Engineering Design

2.09 **MIXING**

A. Per Structural Engineering Design

PART 3 EXECUTION

3.01 **PREPARATION**

A. Formwork: Per Structural Engineering Design

B. Interior Slabs on Grade: Install vapor retarder under interior slabs on grade. Comply with ASTM E1643. Lap joints minimum 6 inches (150 mm). Seal joints, seams and penetrations watertight with manufacturer's recommended products and follow manufacturer's written instructions. Repair damaged vapor retarder before covering.

3.02 **INSTALLING REINFORCEMENT AND OTHER EMBEDDED ITEMS**

A. Per Structural Engineering Design

3.03 **PLACING CONCRETE**

A. Place concrete in accordance with ACI 304R.

B. Place concrete for floor slabs in accordance with ACI 302.1R.

C. Finish floors level and flat, unless otherwise indicated, within the tolerances specified below.

3.04 **FLOOR FLATNESS AND LEVELNESS TOLERANCES**

A. Minimum F(F) Floor Flatness and F(L) Floor Levelness Values:
   1. Exposed to View and Foot Traffic: F(F) of 20; F(L) of 15, on-grade only.
   2. Under Thin Resilient Flooring and Thinset Tile: F(F) of 35; F(L) of 25, on-grade only.

B. Measure F(F) Floor Flatness and F(L) Floor Levelness in accordance with ASTM E1155 (ASTM E1155M), within 48 hours after slab installation; report both composite overall values and local values for each measured section.

C. Correct the slab surface if composite overall value is less than specified and if local value is less than two-thirds of specified value or less than F(F) 13/F(L) 10.

D. Correct defects by grinding or by removal and replacement of the defective work. Areas requiring corrective work will be identified. Re-measure corrected areas by the same process.

3.05 **CONCRETE FINISHING**

A. Repair surface defects, including tie holes, immediately after removing formwork.

B. Unexposed Form Finish: Rub down or chip off fins or other raised areas 1/4 inch (6 mm) or more in height.

C. Concrete Slabs: Finish to requirements of ACI 302.1R, and as follows:
   1. Surfaces to Receive Thin Floor Coverings: "Steel trowel" as described in ACI 302.1R; thin floor coverings include carpeting, resilient flooring, seamless flooring, resinous matrix terrazzo, thin set quarry tile, and thin set ceramic tile.
   2. Other Surfaces to Be Left Exposed: Trowel as described in ACI 302.1R, minimizing burnish marks and other appearance defects.

D. Exposed Form Finish: Sack Finish

3.06 **CURING AND PROTECTION**

A. Per Structural Engineering Design

3.07 **FIELD QUALITY CONTROL**

A. Per Structural Engineering Design

END OF SECTION

SECTION 05 5213
PIPE AND TUBE RAILINGS

PART 1 GENERAL

1.01 SECTION INCLUDES

A. Interior and Exterior installations.
   1. Wall mounted handrails.
   2. Stair railings and guardrails.
   3. Free-standing railings.

B. Fabricator Powder Coatings

1.02 RELATED REQUIREMENTS

A. Section 09 9113 - Exterior Painting: Paint finish.

1.03 REFERENCE STANDARDS

A. AISC 201 - AISC Certification Program for Structural Steel Fabricators, Standard for Steel Building Structures; 2006.

B. ASTM A53/A53M - Standard Specification for Pipe, Steel, Black and Hot-Dipped, Zinc-Coated, Welded and Seamless; 2018.

C. ASTM A123/A123M - Standard Specification for Zinc (Hot-Dip Galvanized) Coatings on Iron and Steel Products; 2017.

D. ASTM A500/A500M - Standard Specification for Cold-Formed Welded and Seamless Carbon Steel Structural Tubing in Rounds and Shapes; 2018.

E. AWS A2.4 - Standard Symbols for Welding, Brazing, and Nondestructive Examination; 2012.

F. IAS AC172 - Accreditation Criteria for Fabricator Inspection Programs for Structural Steel; 2018.

1.04 SUBMITTALS

A. See Section 01 3000 - Administrative Requirements, for submittal procedures.

B. Shop Drawings: Indicate profiles, sizes, connection attachments, anchorage, size and type of fasteners, and accessories.
   1. Indicate welded connections using standard AWS A2.4 welding symbols. Indicate net weld lengths.
   2. Include the design engineer's seal and signature on each sheet of shop drawings.

C. Color Selection: Submit manufacturer's color charts showing the full range of colors available for products with factory-applied color finishes

D. Fabricator's Qualification Statement.

1.05 QUALITY ASSURANCE

A. Structural Designer Qualifications: Professional Structural Engineer experienced in design of this work and licensed in the State in which the Project is located, or personnel under direct supervision of such an engineer.

B. Welder Qualifications: Show certification of welders employed on the Work, verifying AWS qualification within the previous 12 months.

C. Fabricator Qualifications:
   1. A qualified steel fabricator that is certified by the American Institute for Steel Construction (AISC) under AISC 201.
   2. A qualified steel fabricator that is accredited by the International Accreditation Service (IAS) Fabricator Inspection Program for Structural Steel in accordance with IAS AC172.
   3. A company specializing in manufacturing products specified in this section, with not less than ten years of documented experience.

PART 2 PRODUCTS

2.01 RAILINGS - GENERAL REQUIREMENTS

A. Design, fabricate, and test railing assemblies in accordance with the most stringent requirements of applicable local code.

B. Allow for expansion and contraction of members and building movement without damage to connections or members.

C. Dimensions: See drawings for configurations and heights.

D. Provide anchors and other components as required to attach to structure, made of same materials as railing components unless otherwise indicated; where exposed fasteners are unavoidable provide flush countersunk fasteners.

E. Provide slip-on non-weld mechanical fittings to join lengths, seal open ends, and conceal exposed mounting bolts and nuts, including but not limited to elbows, T-shapes, splice connectors, flanges, escutcheons, and wall brackets.

2.02 STEEL RAILING SYSTEM

A. Steel Tube: ASTM A500/A500M, Grade B cold-formed structural tubing.

B. Steel Pipe: ASTM A53/A53M, Grade B Schedule 80, black finish.

C. Welding Fittings: Factory- or shop-welded from matching pipe or tube; seams continuously welded; joints and seams ground smooth.

D. Exposed Fasteners: Flush countersunk screws or bolts; consistent with design of railing.

E. Finish Powder Coating:
   1. Fabricator Standard Material: Polyester powder coating, 3.0 mil (0.076 mm) average film thickness.
      a. Meets or exceeds AAMA 2603 and 2604 specifications

2.03 FABRICATION

A. Accurately form components to suit specific project conditions and for proper connection to building structure.

B. Fit and shop assemble components in largest practical sizes for delivery to site.

C. Thermal Movements: Handrails and railings shall allow for movements resulting from 120 deg F (49 deg C) changes in ambient and 180 deg F (82 deg C) surface temperatures. Base engineering calculation on surface temperatures of materials due to both solar heat gain and nighttime-sky heat loss.

D. Fabricate components with joints tightly fitted and secured. Provide spigots and sleeves to accommodate site assembly and installation.

E. Welded Joints:
   1. Exterior Components: Continuously seal joined pieces by intermittent welds and plastic filler. Drill condensate drainage holes at bottom of members at locations that will not encourage water intrusion.
   2. Interior Components: Continuously seal joined pieces by intermittent welds and plastic filler.
   3. Grind exposed joints flush and smooth with adjacent finish surface. Make exposed joints butt tight, flush, and hairline. Ease exposed edges to small uniform radius.

PART 3 EXECUTION

3.01 EXAMINATION

A. Verify that field conditions are acceptable and are ready to receive work.

3.02 PREPARATION

A. Clean and strip primed steel items to bare metal where site welding is required.

B. Supply items required to be cast into concrete or embedded in masonry with setting templates, for installation as work of other sections.

C. Apply one coat of bituminous paint to concealed aluminum surfaces that will be in contact with cementitious or dissimilar materials.

3.03 **INSTALLATION**

A. Install in accordance with manufacturer's instructions.

B. Install components plumb and level, accurately fitted, free from distortion or defects, with tight joints.

C. Install railings in compliance with ADA Standards for accessible design at applicable locations.

D. Anchor railings securely to structure.

E. Cleaning and Touch-Up: Restore finishes damaged during installation and construction period so no evidence remains of correction work. Return items that cannot be refinished in field to shop; make required alterations and refinish entire unit, or provide new units.

3.04 **TOLERANCES**

A. Maximum Variation From Plumb: 1/4 inch per floor level, non-cumulative.

B. Maximum Offset From True Alignment: 1/4 inch.

C. Maximum Out-of-Position: 1/4 inch.

END OF SECTION

SECTION 06 1000
ROUGH CARPENTRY

PART 1 GENERAL

1.01 SECTION INCLUDES

A. Structural dimension lumber framing.
B. Non-structural dimension lumber framing.
C. Rough opening framing for doors, windows, and roof openings.
D. Sheathing.
E. Roof-mounted curbs.
F. Roofing nailers.
G. Preservative treated wood materials.
H. Miscellaneous framing and sheathing.
I. Concealed wood blocking, nailers, and supports.
J. Miscellaneous wood nailers, furring, and grounds.

1.02 RELATED REQUIREMENTS

A. Section 03 3000 - Cast-in-Place Concrete: Setting anchors in concrete.
B. Section 07 2500 - Weather Barriers: Water-resistive barrier over sheathing.
C. Section 07 6200 - Sheet Metal Flashing and Trim: Sill flashings.
D. Section 09 2116 - Gypsum Board Assemblies: Gypsum-based sheathing.

1.03 REFERENCE STANDARDS

A. ANSI A208.1 - American National Standard for Particleboard; 2009.
B. ASTM C1396/C1396M - Standard Specification for Gypsum Board; 2017.
C. ASTM D2898 - Standard Test Methods for Accelerated Weathering of Fire-Retardant-Treated Wood for Fire Testing; 2010 (Reapproved 2017).
D. ASTM D3273 - Standard Test Method for Resistance to Growth of Mold on the Surface of Interior Coatings in an Environmental Chamber; 2016.
E. ASTM E2357 - Standard Test Method for Determining Air Leakage of Air Barrier Assemblies; 2018.
F. ASTM E84 - Standard Test Method for Surface Burning Characteristics of Building Materials; 2018b.
G. ASTM E96/E96M - Standard Test Methods for Water Vapor Transmission of Materials; 2016.
H. AWC (WFCM) - Wood Frame Construction Manual for One- and Two-Family Dwellings; 2015.
I. AWPA U1 - Use Category System: User Specification for Treated Wood; 2017.
J. ICC (IBC) - International Building Code; Most Recent Edition Adopted by Authority Having Jurisdiction, Including All Applicable Amendments and Supplements.
K. ICC (IECC) - International Energy Conservation Code; Most Recent Edition Adopted by Authority Having Jurisdiction, Including All Applicable Amendments and Supplements.
L. ICC-ES AC38 - Acceptance Criteria for Water-Resistive Barriers; 2016.
M. PS 1 - Structural Plywood; 2009.
N. PS 2 - Performance Standard for Wood-Based Structural-Use Panels; 2010.
O. PS 20 - American Softwood Lumber Standard; 2015.
P. WCLIB (GR) - Standard Grading Rules for West Coast Lumber No. 17; 2015.

Q. WWPA G-5 - Western Lumber Grading Rules; 2017.

1.04 **SUBMITTALS**

A. See Section 01 3000 - Administrative Requirements, for submittal procedures.

PART 2 PRODUCTS

2.01 **GENERAL REQUIREMENTS**

A. Dimension Lumber: Per Structural Engineering Design.

2.02 **CONSTRUCTION PANELS**

A. Roof Sheathing, Per Structural Engineering Design.

B. Wall Sheathing, Per Structural Engineering Design

2.03 **ACCESSORIES**

A. Fasteners and Anchors:
   1. Metal and Finish: Per Structural Engineering Design

B. Joist Hangers: Per Structural Engineering Design

C. Sill Gasket on Top of Foundation Wall and Concrete: 1/4 inch thick, plate width, closed cell plastic foam from continuous rolls.

D. Sill Flashing: As specified in Section 07 6200.

2.04 **FACTORY WOOD TREATMENT**

A. Treated Lumber and Plywood: Comply with requirements of AWPA U1 - Use Category System for wood treatments determined by use categories, expected service conditions, and specific applications.

B. Preservative Treatment:
   1. Preservative Pressure Treatment of Lumber Above Grade: AWPA U1, Use Category UC3B, Commodity Specification A using waterborne preservative.
      a. Kiln dry lumber after treatment to maximum moisture content of 19 percent.
      b. Treat lumber exposed to weather.
      c. Treat lumber in contact with roofing, flashing, or waterproofing.
      d. Treat lumber in contact with masonry or concrete.
      e. Treat lumber less than 18 inches above grade.

PART 3 EXECUTION

3.01 **PREPARATION**

A. Where wood framing bears on cementitious foundations, install full width sill flashing continuous over top of foundation, lap ends of flashing minimum of 4 inches and seal.

B. Install sill gasket under sill plate of framed walls bearing on foundations; puncture gasket cleanly to fit tightly around protruding anchor bolts.

C. Coordinate installation of rough carpentry members specified in other sections.

3.02 **INSTALLATION - GENERAL**

A. Select material sizes to minimize waste.

B. Reuse scrap to the greatest extent possible; clearly separate scrap for use on site as accessory components, including: shims, bracing, and blocking.

3.03 **FRAMING INSTALLATION**

A. Set structural members level, plumb, and true to line. Discard pieces with defects that would lower required strength or result in unacceptable appearance of exposed members.

B. Make provisions for temporary construction loads, and provide temporary bracing sufficient to maintain structure in true alignment and safe condition until completion of erection and installation of permanent bracing.

C. Install structural members full length without splices unless otherwise specifically detailed.

D. Comply with member sizes, spacing, and configurations indicated, and fastener size and spacing indicated, but not less than required by applicable codes and AWC (WFCM) Wood Frame Construction Manual.

E. Construct double joist headers at floor and ceiling openings and under wall stud partitions that are parallel to floor joists; use metal joist hangers unless otherwise detailed.

F. Frame wall openings with two or more studs at each jamb; support headers on cripple studs.

3.04 **BLOCKING, NAILERS, AND SUPPORTS**

A. Provide framing and blocking members as indicated or as required to support finishes, fixtures, specialty items, and trim.

B. In framed assemblies that have concealed spaces, provide solid wood fireblocking as required by applicable local code, to close concealed draft openings between floors and between top story and roof/attic space; other material acceptable to code authorities may be used in lieu of solid wood blocking.

C. In walls, provide blocking attached to studs as backing and support for wall-mounted items, unless item can be securely fastened to two or more studs or other method of support is explicitly indicated.

D. Where ceiling-mounting is indicated, provide blocking and supplementary supports above ceiling, unless other method of support is explicitly indicated.

E. Provide the following specific non-structural framing and blocking:
   1. Cabinets and shelf supports.
   2. Wall brackets.
   3. Handrails.
   4. Grab bars.
   5. Towel and bath accessories.
   6. Wall-mounted door stops.
   7. Chalkboards and marker boards.
   8. Wall paneling and trim.
   9. Joints of rigid wall coverings that occur between studs.

3.05 **ROOF-RELATED CARPENTRY**

A. Coordinate installation of roofing carpentry with deck construction, framing of roof openings, and roofing assembly installation.

B. Provide wood curb at all roof openings except where prefabricated curbs are specified and where specifically indicated otherwise. Form corners by alternating lapping side members.

3.06 **INSTALLATION OF CONSTRUCTION PANELS**

A. Roof Sheathing: Per Structural Engineering Design

B. Wall Sheathing: Per Structural Engineering Design

3.07 **TOLERANCES**

A. Framing Members: 1/4 inch from true position, maximum.

B. Surface Flatness of Floor: 1/8 inch in 10 feet maximum, and 1/4 inch in 30 feet maximum.

C. Variation from Plane (Other than Floors): 1/4 inch in 10 feet maximum, and 1/4 inch in 30 feet maximum.

3.08 **FIELD QUALITY CONTROL**

A. See Section 01 4000 - Quality Requirements, for additional requirements.

B. Coordination of ABAA Tests and Inspections:
   1. Provide testing and inspection required by ABAA QAP.
   2. Notify in ABAA writing of schedule for air barrier work. Allow adequate time for testing and inspection.

3. Cooperate with ABAA testing agency.
4. Allow access to air barrier work areas and staging.
5. Do not cover air barrier work until tested, inspected, and accepted.

3.09 **CLEANING**

A. Waste Disposal: Comply with the requirements of Section 01 7419 - Construction Waste Management and Disposal.
   1. Comply with applicable regulations.
   2. Do not burn scrap on project site.

B. Do not leave any wood, shavings, sawdust, etc. on the ground or buried in fill.

C. Prevent sawdust and wood shavings from entering the storm drainage system.

END OF SECTION

SECTION 06 1753
SHOP-FABRICATED WOOD TRUSSES

PART 1 GENERAL

1.01 SECTION INCLUDES

A. Shop fabricated wood trusses for roof framing.

B. Bridging, bracing, and anchorage.

1.02 RELATED REQUIREMENTS

A. Section 01 6116 - Volatile Organic Compound (VOC) Content Restrictions.

B. Section 06 1000 - Rough Carpentry: Installation requirements for miscellaneous framing

A. Section 06 1000 - Rough Carpentry Material requirements for blocking, bridging, plates, and miscellaneous framing.

1.03 REFERENCE STANDARDS

A. TPI 1 - National Design Standard for Metal-Plate-Connected Wood Truss Construction; 2014.

B. TPI BCSI 1 - Building Component Safety Information Booklet: The Guide to Good Practice for Handling, Installing & Bracing of Metal Plate Connected Wood Trusses; 2018.

C. TPI DSB-89 - Recommended Design Specification for Temporary Bracing of Metal Plate Connected Wood Trusses; 1989.

1.04 SUBMITTALS

A. See Section 01 3000 - Administrative Requirements, for submittal procedures.

B. Product Data: Manufacturer's data sheets on plate connectors, bearing plates, and metal bracing components.

C. Shop Drawings: Show truss configurations, sizes, spacing, size and type of plate connectors, cambers,required openings for web penetrations, framed openings, bearing and anchor details, and bridging and bracing.
   1. Include identification of engineering software used for design.
   2. Provide shop drawings stamped or sealed by design engineer.

D. Designer's Qualification Statement.

E. Fabricator's Qualification Statement.

1.05 QUALITY ASSURANCE

A. Fabricator Qualifications: Company specializing in manufacturing the products specified in this section with minimum three years of documented experience.

1.06 DELIVERY, STORAGE, AND HANDLING

A. Handle and erect trusses in accordance with TPI BCSI 1.

B. Store trusses in vertical position resting on bearing ends.

PART 2 PRODUCTS

2.01 TRUSSES

A. Wood Trusses: Designed and fabricated in accordance with TPI 1 and TPI DSB-89 to achieve structural requirements indicated.

2.02 MATERIALS

A. Lumber:
   1. Moisture Content: Between 7 and 9 percent.
   2. Lumber fabricated from old growth timber is not permitted.

B. Truss Bridging: Type, size and spacing recommended by truss manufacturer.

PART 3 EXECUTION

3.01 **EXAMINATION**

A. Verify that field measurements are as indicated.

B. Verify that supports and openings are ready to receive trusses.

3.02 **PREPARATION**

A. Coordinate placement of bearing items.

3.03 **ERECTION**

A. Install trusses in accordance with manufacturer's instructions and TPI DSB-89 and TPI BCSI 1; maintain a copy of each TPI document on site until installation is complete.

B. Set members level and plumb, in correct position.

C. Make provisions for erection loads, and for sufficient temporary bracing to maintain structure plumb, and in true alignment until completion of erection and installation of permanent bracing.

D. Do not field cut or alter structural members without approval of Architect.

E. Install permanent bridging and bracing.

F. Install headers and supports to frame openings required.

G. Frame openings between trusses with lumber in accordance with Section 06 1000.

H. Coordinate placement of decking with work of this section.

I. After erection, touch-up primed surfaces with primer consistent with shop coat.

3.04 **TOLERANCES**

A. Framing Members: 1/4 inch maximum, from true position.

END OF SECTION

SECTION 06 2000
FINISH CARPENTRY

PART 1 GENERAL

1.01 SECTION INCLUDES

A. Finish carpentry items.

B. Wood casings and moldings.

C. Hardware and attachment accessories.

1.02 RELATED REQUIREMENTS

A. Section 01 6116 - Volatile Organic Compound (VOC) Content Restrictions.

B. Section 06 1000 - Rough Carpentry: Support framing, grounds, and concealed blocking.

C. Section 06 4100 - Architectural Wood Casework: Shop fabricated custom cabinet work.

D. Section 09 9113 - Exterior Painting: Painting of finish carpentry items.

E. Section 09 9123 - Interior Painting: Painting of finish carpentry items.

1.03 REFERENCE STANDARDS

A. AWI/AWMAC/WI (AWS) - Architectural Woodwork Standards 2014, with Errata (2018).

B. AWMAC/WI (NAAWS) - North American Architectural Woodwork Standards, U.S. Version 3.1 2017, with Errata (2019).

C. NEMA LD 3 - High-Pressure Decorative Laminates 2005.

D. PS 1 - Structural Plywood 2009.

E. PS 20 - American Softwood Lumber Standard 2020.

1.04 ADMINISTRATIVE REQUIREMENTS

A. Coordinate the work with plumbing rough-in, electrical rough-in, and installation of associated and adjacent components.

B. Sequence installation to ensure utility connections are achieved in an orderly and expeditious manner.

1.05 SUBMITTALS

A. See Section 01 3000 - Administrative Requirements for submittal procedures.

B. Shop Drawings: Indicate materials, component profiles, fastening methods, jointing details, and accessories.
   1. Provide the information required by AWI/AWMAC/WI (AWS) or AWMAC/WI (NAAWS).

PART 2 PRODUCTS

2.01 FINISH CARPENTRY ITEMS

A. Quality Standard: Custom Grade, in accordance with AWI/AWMAC/WI (AWS) or AWMAC/WI (NAAWS), unless noted otherwise.

B. Exterior Woodwork Items:
   1. Window Casings and Moldings: Softwood; prepare for paint finish.
   2. Soffits and Fascias: Prepare for paint finish.

C. Interior Woodwork Items:
   1. Moldings, Bases, Casings, and Miscellaneous Trim: Clear white pine; prepare for paint finish.
   2. Door, Glazed Light, and Pocket Door Frames: Clear white pine; prepare for paint finish.
   3. Window Sills: Clear white pine; prepare for paint finish.
   4. Loose Shelving: Birch plywood; prepare for paint finish.

2.02 PLASTIC LAMINATE MATERIALS

A. Plastic Laminate: NEMA LD 3; color as selected by Architect; textured, low gloss finish.

2.03 **FASTENINGS**

A. Adhesive for factory-fabricated units: Manufacturer's recommended adhesive for application.

2.04 **ACCESSORIES**

A. Adhesive: Type recommended by fabricator to suit application.

B. Lumber for Shimming and Blocking: Softwood lumber of indicated species.

C. Primer: 09 9000 - Painting and Coating.

D. Wood Filler: Solvent base, tinted to match surface finish color.

2.05 **WOOD TREATMENT**

A. Factory-Treated Lumber: Comply with requirements of AWPA U1 - Use Category System for pressure impregnated wood treatments determined by use categories, expected service conditions, and specific applications.

2.06 **FABRICATION**

A. Shop assemble work for delivery to site, permitting passage through building openings.

B. Cap exposed plastic laminate finish edges with material of same finish and pattern.

C. When necessary to cut and fit on site, provide materials with ample allowance for cutting. Provide trim for scribing and site cutting.

D. Apply plastic laminate finish in full uninterrupted sheets consistent with manufactured sizes. Fit corners and joints hairline; secure with concealed fasteners. Slightly bevel arises. Locate counter butt joints minimum 2 feet from sink cut-outs. (Locate counter butt joints minimum 600 mm from sink cut-outs.)

PART 3 EXECUTION

3.01 **EXAMINATION**

A. Verify adequacy of backing and support framing.

B. Verify mechanical, electrical, and building items affecting work of this section are placed and ready to receive this work.

3.02 **INSTALLATION**

A. Install custom fabrications in accordance with AWI/AWMAC/WI (AWS) or AWMAC/WI (NAAWS) requirements for grade indicated.

B. Set and secure materials and components in place, plumb and level.

C. Carefully scribe work abutting other components, with maximum gaps of 1/32 inch (0.79 mm). Do not use additional overlay trim to conceal larger gaps.

3.03 **PREPARATION FOR SITE FINISHING**

A. Set exposed fasteners. Apply wood filler in exposed fastener indentations. Sand work smooth.

B. Site Finishing: See Section 09 9113 and 09 9123.

C. Before installation, prime paint surfaces of items or assemblies to be in contact with cementitious materials.

END OF SECTION

SECTION 07 2100
THERMAL INSULATION

PART 1 GENERAL

1.01 SECTION INCLUDES

A. Board insulation and integral vapor retarder at slab on grade.

B. Batt insulation and vapor retarder in exterior wall, ceiling, roof, and floor construction.

1.02 RELATED REQUIREMENTS

A. Section 01 6116 - Volatile Organic Compound (VOC) Content Restrictions.

B. Section 04 2723 - Cavity Wall Unit Masonry: Masonry walls enclosing insulation.

C. Section 06 1000 - Rough Carpentry: Supporting construction for batt insulation.

D. Section 06 1000 - Rough Carpentry: Installation requirements for board insulation over steep slope roof sheathing or roof structure.

E. Section 07 2119 - Foamed-In-Place Insulation: Plastic foam insulation other than boards.

F. Section 07 2123 - Loose-Fill Insulation: Granular and bead insulation.

G. Section 07 2500 - Weather Barriers: Separate air barrier and vapor retarder materials.

H. Section 07 5216 - Styrene-Butadiene-Styrene Modified Bituminous Membrane Roofing: Insulation specified as part of roofing system.

1.03 REFERENCE STANDARDS

A. ASTM C578 - Standard Specification for Rigid, Cellular Polystyrene Thermal Insulation; 2018.

B. ASTM C665 - Standard Specification for Mineral-Fiber Blanket Thermal Insulation for Light Frame Construction and Manufactured Housing; 2017.

C. ASTM C1289 - Standard Specification for Faced Rigid Cellular Polyisocyanurate Thermal Insulation Board; 2018a.

D. ASTM E84 - Standard Test Method for Surface Burning Characteristics of Building Materials; 2018b.

E. ASTM E136 - Standard Test Method for Behavior of Materials in a Vertical Tube Furnace At 750 Degrees C; 2019.

1.04 SUBMITTALS

A. See Section 01 3000 - Administrative Requirements, for submittal procedures.

B. Product Data: Provide data on product characteristics, performance criteria, and product limitations.

C. ABAA Field Quality Control Submittals: Submit third-party reports of testing and inspection required by ABAA QAP.

D. Manufacturer's Certificate: Certify that products meet or exceed specified requirements.

E. Manufacturer's Installation Instructions: Include information on special environmental conditions required for installation and installation techniques.

F. ABAA Manufacturer Qualification: Submit documentation of current evaluation of proposed manufacturer and materials.

1.05 QUALITY ASSURANCE

A. Air Barrier Association of America (ABAA) Evaluated Materials Program (EAP); www.airbarrier.org/#sle: Use evaluated materials from a single manufacturer regularly engaged in air barrier material manufacture. Use secondary materials approved in writing by primary material manufacturer.

B. At wood framing, place vapor retarder on warm side of insulation by stapling at 6 inches (152 mm) on center. Lap and seal sheet retarder joints over face of member.

C. Tape seal tears or cuts in vapor retarder.

1.06 **FIELD CONDITIONS**

A. Do not install insulation adhesives when temperature or weather conditions are detrimental to successful installation.

PART 2 PRODUCTS

2.01 **APPLICATIONS**

A. Insulation at Perimeter of Slab on Grade: Extruded polystyrene (XPS) board.

B. Insulation in Wood Framed Walls: Batt insulation with separate vapor retarder.

C. R values as indicated on the drawings.

2.02 **FOAM BOARD INSULATION MATERIALS**

A. Extruded Polystyrene (XPS) Board Insulation: Complies with ASTM C578 with either natural skin or cut cell surfaces.
   1. Type and Compressive Resistance: Type IV, 25 psi (173 kPa), minimum.
   2. Flame Spread Index (FSI): Class A - 0 to 25, when tested in accordance with ASTM E84.
   3. Smoke Developed Index (SDI): 450 or less, when tested in accordance with ASTM E84.
   4. Type and Thermal Resistance, R-value: Type IV, 5.0 (0.88) per 1 inch thickness at 75 degrees F mean temperature.
      a. Required total R-Value as indicated on Drawings.
   5. Board Edges: Tongue-and-groove or shiplap.
   6. Manufacturers:
      a. Kingspan Insulation LLC; GreenGuard XPS Type IV, 25 psi: www.kingspan.com/#sle.
      b. Owens Corning Corporation; FOAMULAR Extruded Polystyrene (XPS) Insulation: www.ocbuildingspec.com/#sle.
      c. Substitutions: See Section 01 6000 - Product Requirements.

2.03 **BATT INSULATION MATERIALS**

A. Where batt insulation is indicated, either glass fiber or mineral fiber batt insulation may be used, at Contractor's option.

B. Glass Fiber Batt Insulation: Flexible preformed batt or blanket, complying with ASTM C665; friction fit.
   1. Combustibility: Non-combustible, when tested in accordance with ASTM E136, except for facing, if any.
   2. Formaldehyde Content: Zero.
   3. Thermal Resistance: R-value as indicated on Drawings.
   4. Facing: Unfaced.
   5. Manufacturers:
      a. Knauf Insulation; EcoBatt Insulation: www.knaufinsulation.com.
      b. Owens Corning Corporation; EcoTouch PINK FIBERGLAS Insulation: www.ocbuildingspec.com/#sle.
      c. Substitutions: See Section 01 6000 - Product Requirements.

C. Mineral Fiber Batt Insulation: Flexible or semi-rigid preformed batt or blanket, complying with ASTM C665; friction fit; unfaced flame spread index of 0 (zero) when tested in accordance with ASTM E84.
   1. Smoke Developed Index: 0 (zero), when tested in accordance with ASTM E84.
   2. Thermal Resistance: R-value as indicated on Drawings.
   3. Manufacturers:
      a. Knauf Insulation; EcoBatt Insulation: www.knaufinsulation.com/#sle.
      b. ROCKWOOL (ROXUL, Inc); COMFORTBATT: www.rockwool.com/#sle.
      c. Substitutions: See Section 01 6000 - Product Requirements.

2.04 **ACCESSORIES**

A. Interior Vapor Retarder: Modified polyethylene/polyacrylate (PE/PA) film reinforced with polyethylene terephthalate (PET) fibers, 12 mils, 0.012 inch thick.
   1. Width: 4.9 feet.
   2. Manufacturers:
      a. SIGA Cover Inc; SIGA-Majrex: www.sigacover.com/#sle.
      b. Substitutions: See Section 01 6000 - Product Requirements.

B. Tape: Reinforced polyethylene film with acrylic pressure sensitive adhesive.
   1. Application: Sealing of interior circular penetrations, such as pipes or cables.
   2. Width: Are required for application.

C. Insulation Fasteners: Appropriate for purpose intended and approved by roofing manufacturer.
   1. Length as required for thickness of insulation material and penetration of deck substrate.

PART 3 EXECUTION

3.01 **EXAMINATION**

A. Verify that substrate, adjacent materials, and insulation materials are dry and that substrates are ready to receive insulation.

B. Verify substrate surfaces are flat, free of honeycomb, fins, irregularities, or materials or substances that may impede adhesive bond.

3.02 **BOARD INSTALLATION AT SLAB PERIMETER**

A. Install boards horizontally on foundation perimeter.
   1. Install in running bond pattern.
   2. Butt edges and ends tightly to adjacent boards and to protrusions.

B. Cut and fit insulation tightly to protrusions or interruptions to the insulation plane.

3.03 **BOARD INSTALLATION UNDER CONCRETE SLABS**

A. Place insulation under slabs on grade after base for slab has been compacted.

B. Cut and fit insulation tightly to protrusions or interruptions to the insulation plane.

C. Prevent insulation from being displaced or damaged while placing vapor retarder and placing slab.

3.04 **BATT INSTALLATION**

A. Install insulation and vapor retarder in accordance with manufacturer's instructions.

B. Install in exterior wall spaces without gaps or voids. Do not compress insulation.

C. Trim insulation neatly to fit spaces. Insulate miscellaneous gaps and voids.

D. Fit insulation tightly in cavities and tightly to exterior side of mechanical and electrical services within the plane of the insulation.

E. At wood framing, place vapor retarder on warm side of insulation by stapling at 6 inches on center. Lap and seal sheet retarder joints over face of member.

F. Tape seal tears or cuts in vapor retarder.

G. Extend vapor retarder tightly to full perimeter of adjacent window and door frames and other items interrupting the plane of the membrane. Tape seal in place.
   1. Install vapor retarder in accordance with manufacturers instructions.
   2. Install vapor retarder with product name facing interior.

H. Coordinate work of this section with requirements for vapor retarder specified in Section 07 2500.

3.05 **FIELD QUALITY CONTROL**

A. See Section 01 4000 - Quality Requirements, for additional requirements.

3.06 **PROTECTION**

A. Do not permit installed insulation to be damaged prior to its concealment.

END OF SECTION

SECTION 07 2500
WEATHER BARRIERS

PART 1 GENERAL

1.01 SECTION INCLUDES

A. Water-Resistive Barrier: Under exterior wall cladding, over sheathing or other substrate.

B. Vapor Retarders: Materials to make exterior walls, joints between exterior walls and roof, joints around frames of openings in exterior walls, and water vapor resistant and air tight.

1.02 RELATED REQUIREMENTS

A. Section 06 1000 - Rough Carpentry: Water-resistive barrier under exterior cladding.

B. Section 07 2100 - Thermal Insulation: Vapor retarder installed in conjunction with batt insulation.

C. Section 07 9200 - Joint Sealants: Sealing building expansion joints.

1.03 DEFINITIONS

A. Weather Barrier: Assemblies that form either water-resistive barriers, air barriers, or vapor retarders.

B. Air Barrier: Air tight barrier made of material that is relatively air impermeable but water vapor permeable, both to the degree specified, with sealed seams and with sealed joints to adjacent surfaces. Note: For the purposes of this specification, vapor impermeable air barriers are classified as vapor retarders.

C. Vapor Retarder: Air tight barrier made of material that is relatively water vapor impermeable, to the degree specified, with sealed seams and with sealed joints to adjacent surfaces.

1. Water Vapor Permeance: For purposes of conversion, 57.2 ng/(Pa s sq m) = 1 perm.

D. Water-Resistive Barrier: Water-shedding barrier made of material that is moisture resistant, to the degree specified, intended to be installed to shed water without sealed seams.

1.04 REFERENCE STANDARDS

A. ASTM D1970/D1970M - Standard Specification for Self-Adhering Polymer Modified Bituminous Sheet Materials Used as Steep Roofing Underlayment for Ice Dam Protection 2019.

B. ASTM E84 - Standard Test Method for Surface Burning Characteristics of Building Materials 2020.

C. ASTM E96/E96M - Standard Test Methods for Water Vapor Transmission of Materials 2016.

D. ASTM E2178 - Standard Test Method for Air Permeance of Building Materials 2013.

E. ICC-ES AC38 - Acceptance Criteria for Water-Resistive Barriers 2016.

F. ICC-ES AC148 - Acceptance Criteria for Flexible Flashing Materials 2017.

1.05 SUBMITTALS

A. See Section 01 3000 - Administrative Requirements, for submittal procedures.

B. Product Data: Provide data on material characteristics.

C. Manufacturer's Installation Instructions: Indicate preparation.

1.06 FIELD CONDITIONS

A. Maintain temperature and humidity recommended by the materials manufacturers before, during and after installation.

PART 2 PRODUCTS

2.01 WEATHER BARRIER ASSEMBLIES

A. Water-Resistive Barrier: Provide on exterior walls under exterior cladding.

2.02 **WATER-RESISTIVE BARRIER MATERIALS (NEITHER AIR BARRIER OR VAPOR RETARDER)**

2.03 **AIR BARRIER MATERIALS (WATER VAPOR PERMEABLE AND WATER-RESISTIVE)**

A. Air Barrier Sheet, Self-Adhered:
   1. Manufacturers:
      a. Henry Company; Blueskin VP100: www.henry.com/#sle.

2.04 **ACCESSORIES**

A. Sealants, Tapes, and Accessories for Sealing Weather Barrier and Sealing Weather Barrier to Adjacent Substrates: As specified or as recommended by weather barrier manufacturer.

B. Flexible Flashing: Self-adhesive sheet flashing complying with ASTM D1970/D1970M, except slip resistance requirement is waived if not installed on a roof.

PART 3 EXECUTION

3.01 **EXAMINATION**

A. Verify that surfaces and conditions are ready to accept the work of this section.

3.02 **PREPARATION**

A. Remove projections, protruding fasteners, and loose or foreign matter that might interfere with proper installation.

B. Clean and prime substrate surfaces to receive adhesives in accordance with manufacturer's instructions.

3.03 **INSTALLATION**

A. Install materials in accordance with manufacturer's instructions.

B. Water-Resistive Barriers: Install continuous barrier over surfaces indicated, with sheets lapped to shed water but with seams not sealed.

C. Air Barriers: Install continuous air tight barrier over surfaces indicated, with sealed seams and with sealed joints to adjacent surfaces.

D. Apply sealants and adhesives within recommended application temperature ranges. Consult manufacturer if temperature is out of this range.

E. Self-Adhered Sheets:
   1. Prepare substrate in manner recommended by sheet manufacturer; fill and tape joints in substrate and between dissimilar materials.
   2. Lap sheets shingle-fashion to shed water and seal laps air tight.
   3. Once sheets are in place, press firmly into substrate with resilient hand roller; ensure that laps are firmly adhered with no gaps or fishmouths.
   4. Use same material, or other material approved by sheet manufacturer for the purpose, to seal to adjacent construction and as flashing.
   5. At wide joints, provide extra flexible membrane allowing joint movement.

F. Openings and Penetrations in Exterior Weather Barriers:
   1. Install flashing over sills, covering entire sill frame member, extending at least 5 inches (125 mm) onto weather barrier and at least 6 inches (150 mm) up jambs; mechanically fasten stretched edges.
   2. At openings to be filled with frames having nailing flanges, seal head and jamb flanges using a continuous bead of sealant compressed by flange and cover flanges with sealing tape at least 4 inches (100 mm) wide; do not seal sill flange.
   3. At openings to be filled with non-flanged frames, seal weather barrier to each side of opening framing, using flashing at least 9 inches (230 mm) wide, covering entire depth of framing.
   4. At head of openings, install flashing under weather barrier extending at least 2 inches (50 mm) beyond face of jambs; seal weather barrier to flashing.
   5. At interior face of openings, seal gap between window/door frame and rough framing, using joint sealant over backer rod.

6. Service and Other Penetrations: Form flashing around penetrating item and seal to weather barrier surface.

3.04 **FIELD QUALITY CONTROL**

A. See Section 01 4000 - Quality Requirements, for additional requirements.

B. Coordination of ABAA Tests and Inspections:
   1. Provide testing and inspection required by ABAA QAP.
   2. Notify ABAA in writing of schedule for air barrier work, and allow adequate time for testing and inspection.
   3. Cooperate with ABAA testing agency.
   4. Allow access to air barrier work areas and staging.
   5. Do not cover air barrier work until tested, inspected, and accepted.

END OF SECTION

SECTION 07 3100
ASPHALT SHINGLES

PART 1 GENERAL

1.01 SECTION INCLUDES

A. Asphalt roofing shingles.

B. Leak barrier and roof deck protection.

C. Metal flashing associated with shingle roofing.

D. Attic ventilation.

1.02 RELATED SECTIONS

A. Section 06100 - Rough Carpentry: Framing, wood decking, and roof sheathing.

B. Section 07620 - Flashing and Sheet Metal: Sheet metal flashing not associated with shingle roofing; gutters and downspouts.

1.03 REFERENCES

A. American Society for Testing and Materials (ASTM) - Annual Book of ASTM Standards
   1. ASTM A 653/A 653M - Standard Specification for Steel Sheet, Zinc Coated (Galvanized) or Zinc-Iron Alloy-Coated (Galvannealed) by the Hot-Dip Process.
   2. ASTM D 3018 - Standard Specification for Class A Asphalt Shingles Surfaced with Mineral Granules.
   3. ASTM D 3161 - Standard Test Method for Wind-Resistance of Asphalt Shingles (Fan-Induced Method).
   4. ASTM D 3462 – Standard Specification for Asphalt Shingles Made From Glass Felt and Surfaced with Mineral Granules.
   5. ASTM D 7158 - Standard Test Method for Wind-Resistance of Sealed Asphalt Shingles (Uplift Force/Uplift Resistance Method).
   6. AC438-1011-R1 – New Acceptance Criteria for Alternative Asphalt Roofing Shingles
   7. UL 790 - Tests for Fire Resistance of Roof Covering Materials.
   8. UL 997 - Wind Resistance of Prepared Roof Covering Materials.
   9. UL 2218 – Impact Resistance of Prepared Roof Covering Materials.

B. Asphalt Roofing Manufacturers Association (ARMA)

C. Sheet Metal and Air Conditioning Contractors National Association, 1nc. (SMACNA) - Architectural Sheet Metal Manual.

D. National Roofing Contractors Association (NRCA)

E. American Society of Civil Engineers (ASCE).

F. ASCE 7 - Minimum Design Loads for Buildings and Other Structures.

1.04 DEFINITIONS

A. Roofing Terminology: Refer to ASTM D1079 and the glossary of the National Roofing Contractors Association (NRCA) Roofing and Waterproofing Manual for definitions of roofing terms related to this section.

1.05 SUBMITTALS

A. Submit copies of GAF® product data sheets, detail drawings and samples for each type of roofing product.

1.06 QUALITY ASSURANCE

A. Manufacturer Qualifications: Provide all primary roofing products, including shingles, underlayment, leak barrier, and ventilation, by a single manufacturer.

B. Installer Qualifications: Installer must be approved for installation of all roofing products to be installed under this section.

1.07 REGULATORY REQUIREMENTS

A. Provide a roofing system achieving an Underwriters Laboratories (UL) Class A fire classification.

B. Install all roofing products in accordance with all federal, state and local building codes.

C. All work shall be performed in a manner consistent with current OSHA guidelines.

1.08 PREINSTALLATION MEETING

A. General: For all projects in excess of 250 squares of roofing, a pre-installation meeting is strongly recommended.

B. Timing: The meeting shall take place at the start of the roofing installation, no more than 2 weeks into the roofing project.

C. Attendees: Meeting to be called for by manufacturer's certified contractor. Meeting's mandatory attendees shall include the certified contractor and the manufacturer's representative. Non-mandatory attendees shall include the owner's representative, architect or engineer's representative, and the general contractor's representative.

D. Topics: Certified contractor and manufacturer's representative shall review all pertinent requirements for the project, including but not limited to, scheduling, weather considerations, project duration, and requirements for the specified warranty.

1.09 DELIVERY, STORAGE, AND HANDLING

A. Store all products in manufacturer's unopened, labeled packaging until they are ready for installation.

B. Store products in a covered, ventilated area, at temperature not more than 110 degrees F (43 degrees C); do not store near steam pipes, radiators, or in direct sunlight.

C. Store bundles on a flat, properly drained surface. Maximum stacking height shall not exceed GAF®'s recommendations. Store all rolls on end.

D. Store and dispose of solvent-based materials in accordance with all federal, state and local regulations.

1.10 WEATHER CONDITIONS

A. Proceed with work only when existing and forecasted weather conditions will permit work to be performed in accordance with GAF®'s recommendations

1.11 WARRANTY Provide to the owner a **GAF® Shingle & Accessory Ltd. Warranty** for**:**

A. GAF® Lifetime Shingles covering
   1. Manufacturing defects: 100% coverage for materials for:
      a. - 10 years non-prorated, then 20% thereafter for all GAF Lifetime Shingles.
      b. - 5 years non-prorated, then 20% thereafter for GAF Royal Sovereign and Marquis Weathermax Shingles.
      c. Any other type of owner or building – 40 years with the first 5 years non - prorated.
      d. With the use of three or more GAF Accessory Products (GAF Ridge Cap Shingles, GAF Starter Strip Shingle, GAF Leak Barrier, GAF Roof Deck Protection, GAF Cobra

PART 2 PRODUCTS

2.01 **MANUFACTURER**

A. Acceptable Manufacturer: GAF®,1 Campus Drive, Parsippany, NJ 07054. Tel: 1-973-628-3000.

B. Requests for substitutions will be considered in accordance with provisions of Section 01600.

2.02 **SHINGLES**

A. Self sealing, granule surfaced, asphalt shingle with a strong fiberglass reinforced Micro Weave core and StainGuard protection, which prevents pronounced discoloration from blue-green algae through formulation/unique blends of granules. Architectural laminate styling provides a wood shake appearance with 5 5/8in. exposure. Features the classic Natural Shadow effect. UL 790 Class A rated with UL 997 Wind Resistance Label; ASTM D

7158, Class H; ASTM D 3161, Type 1; ASTM D 3018, Type 1; ASTM D 3462; AC438 compliant; CSA 123.5-98; Dade County Approved, Florida Building Code Approved, Texas Dept of Insurance Approved, ICC Report Approval. **Timberline® Natural Shadow®** Lifetime Shingles, by GAF®.

1. Color: As selected from manufacturers' full range.
2. Color: Match Existing

2.03 **HIP AND RIDGE SHINGLES**

A. High profile self sealing hip and ridge cap shingle matching the color of selected roof shingle. Each bundle covers approx. 20 lineal feet (6.10m). **Timbertex®** Premium Ridge Cap Shingles, by GAF®.

2.04 **STARTER STRIP**

A. Self sealing starter shingle designed for all roof shingles. Each bundle covers approx. 120 lineal feet (36.58m). **ProStart™** Starter Strip by GAF®.

2.05 **LEAK BARRIER**

A. Self-adhering, self-sealing, bituminous leak barrier surfaced with a smooth polyethylene film. Approved by UL, Dade County, ICC, State of Florida and Texas Department of Insurance. Each Roll contains approx. 200 sq ft. (18.6 sq.m.), 36" X 66.7' (0.9m x 20.3m), and 60 mils thick. **StormGuard®** Leak Barrier, by GAF®.

2.06 **SHINGLE UNDERLAYMENT**

A. #30 Roofing Underlayment - By Others: Water repellent breather type cellulose fiber building paper. Meets or exceeds the requirements of ASTM D-4869 Type II.

2.07 **ATTIC VENTILATION**

A. Ridge Vents
   1. Flexible rigid plastic ridge ventilator designed to allow the passage of hot air from attics, while resisting snow infiltration. For use in conjunction with eave/soffit ventilation products. Provides 12.5 sq inches Net Free Ventilation Area per lineal foot (26460 sq.mm/m). Each package contains 20 lineal feet (6.10m) of vent. **Cobra® Ridge Runner™** Ridge Vent by GAF®.

2.08 **NAILS**

A. Standard round wire, zinc-coated steel or aluminum; 10 to 12 gauge, smooth, barbed or deformed shank, with heads 3/8 inch (9mm) to 7/16 inch (11mm) in diameter. Length must be sufficient to penetrate into solid wood at least 3/4 inch (19mm) or through plywood or oriented strand board by at least 1/8 inch (3.18mm).

2.09 **METAL FLASHING**

A. 24 gauge hot-dip galvanized steel sheet, complying with ASTM A 653/A 653M, G90/Z275.

PART 3 EXECUTION

3.01 **EXAMINATION**

A. Do not begin installation until the roof deck has been properly prepared.

B. If roof deck preparation is the responsibility of another installer, notify the architect or building owner of unsatisfactory preparation before proceeding.

3.02 **PREPARATION** Remove selected existing roofing down to the roof deck.

B. Verify that the deck is dry, sound, clean and smooth. It shall be free of any depressions, waves, and projections.

C. Cover with sheet metal, all holes over 1 inch (25mm) in diameter, cracks over 1/2 inch (12mm) in width, loose knots and excessively resinous areas.

D. Replace damaged deck with new materials.

E. Clean deck surfaces thoroughly prior to installation of eaves protection membrane and underlayment.

3.03 **PREPARATION OF SUBSTRATE**

A. Clean deck surfaces thoroughly prior to installation of eaves protection membrane and underlayment.

B. At areas that receive eaves protection membrane, fill knotholes and cracks with latex filler.

C. Install crickets on the upslope side of all chimneys in the north, any chimney wider than 24" (610mm), and on all roofs steeper than 6/12.

3.04 **INSTALLATION OF UNDERLAYMENTS** General:

1. Install using methods recommended by GAF®, in accordance with local building codes. When local codes and application instructions are in conflict, the more stringent requirements shall take precedence.

B. Eaves:

1. Install eaves edge metal flashing tight with fascia boards; lap joints 2 inches (51mm) and seal with plastic cement or high quality urethane sealant; nail at the top of the flange.
2. In the north, and on all roofs between 2/12 and 4/12 (low slopes) install GAF® leak barrier up the slope from eaves edge a full 36 inches (914mm) or to at least 24 inches (610 mm) beyond the interior "warm wall". Lap ends 6 inches (152mm) and bond.

C. Valleys:

1. Install eaves protection membrane at least 36 (914mm) inches wide and centered on the valley. Lap ends 6 inches (152mm) and seal.
2. Where valleys are indicated to be "open valleys", install metal flashing over GAF® leak barrier before GAF® roof deck protection is installed; DO NOT nail through the flashing. Secure the flashing by nailing at 18 inches (457 mm) on center just beyond edge of flashing so that nail heads hold down the edge.

D. Hips and Ridges:

1. Install GAF® leak barrier along entire lengths. If ridge vents are to be installed, position the GAF® leak barrier so that the ridge slots will not be covered.

E. Roof Deck Protection:

1. Install one layer of GAF® roof deck protection over the entire area not protected by GAF® leak barrier at the eaves or valley. Install sheets horizontally so water sheds and nail in place.
2. On roofs sloped at more than 4:12, lap horizontal edges at least 2 inches (51mm) and at least 2 inches (51mm) over eaves protection membrane.
3. On roofs sloped between 2:12 and 4:12, lap horizontal edges at least 19 inches (482 mm) and at least 19 inches (482mm) over eaves protection membrane.
4. Lap ends at least 4 inches (102 mm). Stagger end laps of each layer at least 36 inches (914 mm).
5. Lap GAF® roof deck protection over GAF® leak barrier in valley at least 6 inches (152mm).

F. Penetrations:

1. Vent pipes: Install a 24 inch (610 mm) square piece of eaves protection membrane lapping over roof deck underlayment; seal tightly to pipe.
2. Vertical walls: Install eaves protection membrane extending at least 6 inches (152mm) up the wall and 12 inches (305mm) on to the roof surface. Lap the membrane over the roof deck underlayment.
3. Skylights and roof hatches: Install eaves protection membrane from under the built-in counterflashing and 12 inches (305mm) on to the roof surface lapping over roof deck underlayment.
4. Chimneys: Install eaves protection membrane around entire chimney extending at least 6 inches (152mm) up the wall and 12 inches (305mm) on to the roof surface. Lap the membrane over the roof deck underlayment.
5. Rake Edges: Install metal edge flashing over eaves protection membrane and roof deck underlayment; set tight to rake boards; lap joints at least 2 inches (51mm) and seal with plastic cement; secure with nails.

3.05 **INSTALLATION OF STARTER SHINGLES**

A. General:
   1. Install in accordance with GAF®'s instructions and local building codes. When local codes and application instructions are in conflict, the more stringent requirements shall take precedence.
   2. Refer to application instructions for the selected starter strip shingles.

B. Placement and Nailing:
   1. For maximum wind resistance along rakes & eaves, install any GAF® starter strip containing sealant or cement shingles to underlayment and each other in a 4" (102mm) width of asphalt plastic roof cement.
   2. Place starter strip shingles 1/4" – 3/4" (6 – 19mm) over eave and rake edges to provide drip edge.
   3. Nail approximately 1-1/2" – 3" (38 – 76mm) above the butt edge of the shingle.
   4. Rake starter course should overlap eave edge starter strip at least 3" (76mm).

3.06 **INSTALLATION OF SHINGLES**

A. General:
   1. Install in accordance with GAF®'s instructions and local building codes. When local codes and application instructions are in conflict, the more stringent requirements shall take precedence.
   2. Minimize breakage of shingles by avoiding dropping bundles on edge, by separating shingles carefully (not by "breaking" over ridge or bundles), and by taking extra precautions in temperatures below 40 degrees F (4 degrees C).
   3. Handle carefully in hot weather to avoid scuffing the surfacing, or damaging the shingle edges.

B. Placement and Nailing: Secure with 4, 5, or 6 nails per shingle per GAF®'s application instructions or local codes.
   2. Placement of nails varies based on the type of shingle specified. Consult the application instructions for the specified shingle for details.
   3. Nails must be driven flush with the shingle surface. Do not overdrive or under drive the nails.
   4. Shingle offset varies based on the type of shingle specified. Consult the application instructions for the specified shingle for details.

C. Valleys Install valleys using the "open valley" method:
   a Snap diverging chalk lines on the metal flashing, starting at 3 inches (76mm) each side of top of valley, spreading at 1/8 inch per foot (9mm per meter) to the eaves.
   b Run shingles to chalk line.
   c Trim last shingle in each course to match the chalk line; do not trim shingles to less than 12 inches (305mm) wide.
   d Apply a 2 inch (51mm) wide strip of plastic cement under ends of shingles, sealing them to the metal flashing.

D. Penetrations
   1. All Penetrations are to be flashed according to GAF®, ARMA and NRCA application instructions and construction details.

3.07 **INSTALLATION OF ATTIC VENTILATION**

A. General
   1. Ventilation must meet or exceed current local code requirements.

B. Ridge / Soffit ventilation
   1. Install ridge vent along the entire length of ridges:
   2. Cut continuous vent slots through the sheathing, stopping 6 inches (152mm) from each end of the ridge.

3. On roofs without ridge board, make a slot 1 inch (25mm) wide, on either side of the peak (2 inch (51mm) overall).
4. On roofs with ridge board, make two slots 1-3/4 inches (44.5mm) wide, one on each side of the peak (3 ½ inch (89mm) overall).
5. Install ridge vent material along the full length of the ridge, including uncut areas.
6. Butt ends of ridge vent material and join using roofing cement.
7. Install eaves vents in sufficient quantity to equal or exceed the ridge vent area.

3.08 **PROTECTION**

A. Protect installed products from foot traffic until completion of the project.

B. Any roof areas that are not completed by the end of the workday are to be protected from moisture and contaminants.

END OF SECTION

SECTION 07 4623
WOOD SIDING

PART 1 GENERAL

1.01 SECTION INCLUDES

A. Wood siding including the following:
   1. Wood paneling.
   2. Wood batts.

1.02 RELATED SECTIONS

A. Section 06 10 00 - Rough Carpentry.

1.03 REFERENCES

A. FSC-Certified - Forest Stewardship Council Certification.

1.04 SUBMITTALS

A. Submit under provisions of Section 01 30 00 - Administrative Requirements.

B. Product Data: Manufacturer's data sheets on each product to be used, including:
   1. Preparation instructions and recommendations.
   2. Storage and handling requirements and recommendations.
   3. Installation methods.

C. Selection Samples: For each finish product specified, two complete sets of color chips representing manufacturer's full range of available colors and patterns.

D. Verification Samples: For each finish product specified, two samples, minimum size 6 inches (150 mm) square representing actual product, color, and patterns.

1.05 QUALITY ASSURANCE

A. Manufacturer Qualifications: Minimum 5 year experience harvesting and milling forest products.

B. Installer Qualifications: Minimum 2 year experience installing similar products.

C. Mock-Up: Provide a mock-up for evaluation of surface preparation techniques and application workmanship.
   1. Finish areas designated by Architect.
   2. Do not proceed with remaining work until workmanship is approved by Architect.
   3. Refinish mock-up area as required to produce acceptable work.

D. Grading shall be established by published grading rules.

1.06 PRE-INSTALLATION MEETINGS

A. Convene minimum two weeks prior to starting work of this section.

1.07 DELIVERY, STORAGE, AND HANDLING

A. Deliver and store products in manufacturer's unopened packaging bearing the brand name and manufacturer's identification until ready for installation.

B. Handling: Handle materials to avoid damage.

1.08 PROJECT CONDITIONS

A. Maintain environmental conditions (temperature, humidity, and ventilation) within limits recommended by manufacturer for optimum results. Do not install products under environmental conditions outside manufacturer's recommended limits.

1.09 SEQUENCING

A. Ensure that products of this section are supplied to affected trades in time to prevent interruption of construction progress.

PART 2 PRODUCTS

2.01 **MANUFACTURERS**

A. Acceptable Manufacturer: Roseburg Forest Products, www.roseburg.com

B. Substitutions: See Section 01 6000 - Product Requirements.

2.02 **WOOD PANELING**

A. Material: Match existing panel siding.

2.03 **WOOD BATTS**

A. Material: Match existing batts.

PART 3 EXECUTION

3.01 **EXAMINATION**

A. Do not begin installation until substrates have been properly prepared.

B. If substrate preparation is the responsibility of another installer, notify Architect of unsatisfactory preparation before proceeding.

3.02 **PREPARATION**

A. Clean surfaces thoroughly prior to installation.

B. Prepare surfaces using the methods recommended by the manufacturer for achieving the best result for the substrate under the project conditions.

3.03 **INSTALLATION**

A. Install in accordance with manufacturer's instructions.

B. Products shall have all butt and scarf joints caulked with a quality, exterior rated, flexible caulk prior to paint application. All non-trim/fascia abutments shall be caulked and sealed with the same exterior grade caulk.

C. Ends exposed due to post-manufacturing field cuts shall be sealed with a premium, 100% acrylic primer, to ensure that no fiber is left exposed to the elements.

D. Use only corrosion resistant fasteners. Acceptable are stainless steel or hot-dipped galvanized nails; minimum size - 7 penny.

E. Joints shall fall over framing lumber and shall be double nailed. Trim boards of 10 inches (254 mm) or greater in width require 3 nails evenly spaced across the face of the board. Do not nail any less than 1/2 inch (13 mm) from any edge and fasten at a minimum of every 24 inches (610 mm) on center.

F. Drive nails perpendicular to the framing lumber and the wood trim product; drive nails flush with the product's surface. Nails shall penetrate at least 1-1/4 inches (32 mm) into the structural framing.

3.04 **PROTECTION**

A. Protect installed products until completion of project.

B. Touch-up, repair or replace damaged products before Substantial Completion.

END OF SECTION

SECTION 07 6200
SHEET METAL FLASHING AND TRIM

PART 1 GENERAL

1.01 SECTION INCLUDES

A. Fabricated sheet metal items, including flashings, counterflashings, gutters, downspouts, sheet metal roofing, exterior penetrations, and other items indicated in Schedule.

B. Sealants for joints within sheet metal fabrications.

1.02 RELATED REQUIREMENTS

A. Section 06 1000 - Rough Carpentry: Wood nailers for sheet metal work.

B. Section 06 1000 - Rough Carpentry: Field fabricated roof curbs.

C. Section 07 7123 - Manufactured Gutters and Downspouts.

1.03 REFERENCE STANDARDS

A. AAMA 2605 - Voluntary Specification, Performance Requirements and Test Procedures for Superior Performing Organic Coatings on Aluminum Extrusions and Panels (with Coil Coating Appendix) 2017a.

B. ASTM A653/A653M - Standard Specification for Steel Sheet, Zinc-Coated (Galvanized) or Zinc-Iron Alloy-Coated (Galvannealed) by the Hot-Dip Process 2020.

C. ASTM A666 - Standard Specification for Annealed or Cold-Worked Austenitic Stainless Steel Sheet, Strip, Plate, and Flat Bar 2015.

D. ASTM C920 - Standard Specification for Elastomeric Joint Sealants 2018.

E. ASTM D4586/D4586M - Standard Specification for Asphalt Roof Cement, Asbestos-Free 2007 (Reapproved 2018).

F. CDA A4050 - Copper in Architecture - Handbook current edition.

G. SMACNA (ASMM) - Architectural Sheet Metal Manual 2012.

1.04 SUBMITTALS

A. See Section 01 3000 - Administrative Requirements, for submittal procedures.

B. Shop Drawings: Indicate material profile, jointing pattern, jointing details, fastening methods, flashings, terminations, and installation details.

1.05 QUALITY ASSURANCE

A. Perform work in accordance with SMACNA (ASMM) and CDA A4050 requirements and standard details, except as otherwise indicated.

PART 2 PRODUCTS

2.01 SHEET MATERIALS

A. Pre-Finished Galvanized Steel: ASTM A653/A653M, with G90/Z275 zinc coating; minimum 24 gage, (0.0239) inch (0.61 mm) thick base metal, shop pre-coated with PVDF coating.
   1. PVDF (Polyvinylidene Fluoride) Coating: Superior Performance Organic Finish, AAMA 2605; multiple coat, thermally cured fluoropolymer finish system.

2.02 FABRICATION

A. Form sections true to shape, accurate in size, square, and free from distortion or defects.

B. Form pieces in longest possible lengths.

C. Hem exposed edges on underside 1/2 inch (13 mm); miter and seam corners.

D. Form material with flat lock seams, except where otherwise indicated; at moving joints, use sealed lapped, bayonet-type or interlocking hooked seams.

E. Fabricate corners from one piece with minimum 18 inch (450 mm) long legs; seam for rigidity, seal with sealant.

F. Fabricate flashings to allow toe to extend 2 inches (50 mm) over roofing gravel. Return and brake edges.

2.03 **GUTTER AND DOWNSPOUT FABRICATION**

A. Gutters: SMACNA (ASMM) Rectangular profile.

B. Downspouts: Rectangular profile.

C. Gutters and Downspouts: Match existing size.

D. Accessories: Profiled to suit gutters and downspouts.
   1. Anchorage Devices: In accordance with SMACNA (ASMM) requirements.
   2. Gutter Supports: Brackets.
   3. Downspout Supports: Brackets.

E. Seal metal joints.

2.04 **ACCESSORIES**

A. Fasteners: Galvanized steel, with soft neoprene washers.

B. Primer: Zinc chromate type.

C. Concealed Sealants: Non-curing butyl sealant.

D. Exposed Sealants: ASTM C920; elastomeric sealant, with minimum movement capability as recommended by manufacturer for substrates to be sealed; color to match adjacent material.

E. Plastic Cement: ASTM D4586/D4586M, Type I.

F. Reglets: Surface mounted type, galvanized steel; face and ends covered with plastic tape.

PART 3 EXECUTION

3.01 **PREPARATION**

A. Install starter and edge strips, and cleats before starting installation.

B. Install surface mounted reglets true to lines and levels, and seal top of reglets with sealant.

C. Back paint concealed metal surfaces with protective backing paint to a minimum dry film thickness of 15 mil (0.4 mm).

3.02 **INSTALLATION**

A. Comply with drawing details.

B. Secure flashings in place using concealed fasteners, and use exposed fasteners only where permitted..

C. Apply plastic cement compound between metal flashings and felt flashings.

D. Fit flashings tight in place; make corners square, surfaces true and straight in planes, and lines accurate to profiles.

E. Secure gutters and downspouts in place with concealed fasteners.

END OF SECTION

SECTION 07 9200
JOINT SEALANTS

PART 1 GENERAL

1.01 SECTION INCLUDES

A. Nonsag gunnable joint sealants.

B. Joint backings and accessories.

1.02 RELATED REQUIREMENTS

A. Section 07 2500 - Weather Barriers: Sealants required in conjunction with air barriers and vapor retarders.

1.03 REFERENCE STANDARDS

A. ASTM C661 - Standard Test Method for Indentation Hardness of Elastomeric-Type Sealants by Means of a Durometer 2015.

B. ASTM C834 - Standard Specification for Latex Sealants 2017.

C. ASTM C920 - Standard Specification for Elastomeric Joint Sealants 2018.

D. ASTM C1193 - Standard Guide for Use of Joint Sealants 2016.

E. ASTM C1248 - Standard Test Method for Staining of Porous Substrate by Joint Sealants 2018.

F. ASTM C1521 - Standard Practice for Evaluating Adhesion of Installed Weatherproofing Sealant Joints 2019 (Reapproved 2020).

1.04 SUBMITTALS

A. See Section 01 3000 - Administrative Requirements, for submittal procedures.

PART 2 PRODUCTS

2.01 JOINT SEALANT APPLICATIONS

A. Scope:
   1. Exterior Joints: Seal open joints, whether or not the joint is indicated on drawings, unless specifically indicated not to be sealed. Exterior joints to be sealed include, but are not limited to, the following items.
      a. Wall expansion and control joints.
      b. Joints between door, window, and other frames and adjacent construction.
      c. Joints between different exposed materials.
      d. Openings below ledge angles in masonry.
      e. Other joints indicated below.
   2. Interior Joints: Do not seal interior joints unless specifically indicated to be sealed. Interior joints to be sealed include, but are not limited to, the following items.
      a. Joints between door, window, and other frames and adjacent construction.
      b. Other joints indicated below.
   3. Do not seal the following types of joints.
      a. Intentional weepholes in masonry.
      b. Joints indicated to be treated with manufactured expansion joint cover or some other type of sealing device.
      c. Joints where sealant is specified to be provided by manufacturer of product to be sealed.
      d. Joints where installation of sealant is specified in another section.
      e. Joints between suspended panel ceilings/grid and walls.

2.02 NONSAG JOINT SEALANTS

A. Type 1 - Polyurethane Sealant: ASTM C920, Grade NS, Uses M and A; single or multi-component; not expected to withstand continuous water immersion or traffic.
   1. Movement Capability: Plus and minus +100 to -50 percent, minimum.
   2. Hardness Range: 20 to 35, Shore A, when tested in accordance with ASTM C661.

3. Color: Match adjacent finished surfaces.
4. Manufacturers:
   a. Master Builders Solutions by BASF; MasterSeal NP1: www.master-builders-solutions.basf.us/en-us/#sle.

B. Type 2 - Acrylic Emulsion Latex: Water-based; ASTM C834, single component, non-staining, non-bleeding, non-sagging; not intended for exterior use.
1. Color: Standard colors matching finished surfaces, Type OP (opaque).
2. Manufacturers:
   a. Master Builders Solutions by BASF; MasterSeal NP 520: www.master-builders-solutions.basf.us/en-us/#sle.

2.03 **ACCESSORIES**

A. Backer Rod: Cylindrical cellular foam rod with surface that sealant will not adhere to, compatible with specific sealant used, and recommended by backing and sealant manufacturers for specific application.

B. Backing Tape: Self-adhesive polyethylene tape with surface that sealant will not adhere to and recommended by tape and sealant manufacturers for specific application.

PART 3 EXECUTION

3.01 **EXAMINATION**

A. Verify that joints are ready to receive work.

B. Verify that backing materials are compatible with sealants.

C. Verify that backer rods are of the correct size.

3.02 **PREPARATION**

A. Remove loose materials and foreign matter that could impair adhesion of sealant.

B. Clean joints, and prime as necessary, in accordance with manufacturer's instructions.

C. Perform preparation in accordance with manufacturer's instructions and ASTM C1193.

D. Mask elements and surfaces adjacent to joints from damage and disfigurement due to sealant work; be aware that sealant drips and smears may not be completely removable.

3.03 **INSTALLATION**

A. Perform work in accordance with sealant manufacturer's requirements for preparation of surfaces and material installation instructions.

B. Perform installation in accordance with ASTM C1193.

C. Install bond breaker backing tape where backer rod cannot be used.

D. Install sealant free of air pockets, foreign embedded matter, ridges, and sags, and without getting sealant on adjacent surfaces.

E. Do not install sealant when ambient temperature is outside manufacturer's recommended temperature range, or will be outside that range during the entire curing period, unless manufacturer's approval is obtained and instructions are followed.

F. Nonsag Sealants: Tool surface concave, unless otherwise indicated; remove masking tape immediately after tooling sealant surface.

END OF SECTION

SECTION 08 1400
WOOD DOORS

PART 1 GENERAL

1.01 SECTION INCLUDES

A. Aluminum clad exterior wood swing panels (outswing or inswing) installed in frame.

B. Accessories, including glazing, louvers, and matching panels.

1.02 RELATED REQUIREMENTS

A. Section 06 1000 - Rough Carpentry

B. Section 08 7100 - Door Hardware.

C. Section 09 9113 - Exterior Painting: Field painting.

D. Section 09 9123 - Interior Painting: Field painting.

1.03 REFERENCE STANDARDS

A. American Architectural Manufacturers Association (AAMA):
   1. AAMA 2604 "Voluntary Specification, Performance Requirements and Test Procedures for Pigmented Organic Coatings on Aluminum Extrusions and Panels."
   2. AAMA 2605 "Voluntary Specification, Performance Requirements and Test Procedures for Superior Performing Organic Coatings on Aluminum Extrusions and Panels."

B. American National Standards Institute (ANSI):
   1. ANSI Z97.1 "Safety Glazing Materials Used in Buildings – Safety Performance Specifications and Methods of Test."

C. American Society for Testing and Materials (ASTM):
   1. ASTM B 136 "Standard for Measurement of Stain Resistance of Anodic Coatings on Aluminum."
   2. ASTM B 137 "Standard for Measurement of Coating Mass Per Unit Area on Anodically Coated Aluminum."
   3. ASTM B 244 "Standard for Measurement of Thickness of Anodic Coatings on Aluminum and of Other Nonconductive Coatings or Nonmagnetic Basis Metals with Eddy Current Instruments."
   4. ASTM C 1036 "Standard Specification for Flat Glass."
   5. ASTM C 1048 "Standard Specification for Heat-Treated Flat Glass – Kind HS, Kind FT Coated and Uncoated Glass."
   6. ASTM D 3359 "Standard Test Methods for Measuring Adhesion by Tape Test."
   7. ASTM D 5235 "Standard Test Method for Microscopical Measurement of Dry Film Thickness of Coatings on Wood Products."
   8. ASTM D 5572 "Standard Specification for Adhesives Used for Finger Joints in Nonstructural Lumber Products."
   9. ASTM D 5751 "Standard Specification for Laminate Joints in Nonstructural Lumber Products."

D. National Fenestration Rating Council (NFRC):
   1. NFRC 100 "Procedure for Determining Fenestration Products U-Factors."
   2. NFRC 200 "Procedure for Determining Fenestration Product Solar Heat Gain Coefficients at Normal Incidence."
   3. NFRC 300 "Procedure for Determining Solar Optical Properties of Simple Fenestration Product."

E. Consumer Products Safety Commission:
   1. 16 CFR, Part 1201 "Safety Standard for Architectural Glazing Material."

F. Window and Door Manufacturers Association (WDMA):
   1. WDMA I.S.4 "Industry Standard for Water Repellant Preservative Non-Pressure Treatment for Millwork."

1.04 **DEFINITIONS**

A. U Cog: Units Btu/(hr•ft^2•°F), center-of-glass U value. Center-of-glass is the central glazed portion of the window which one sees through that is more than 2.5 inches from sightline.

B. U/R Total: Value of total unit calculated per NFRC 100 using window and frame. U Factor is the primary measure of winter energy efficiency. A low U Factor means less heat passes through the unit due to exterior air and roomside air temperature differences. R Value = 1/U.

C. SHGC: The solar heat gain coefficient of the total fenestration system represents the solar heat gain through the system relative to the incident solar radiation striking the exterior surface. Solar Heat Gain Ratings are determined in accordance with NFRC 200.

D. Vtc: The visible transmittance of the total fenestration system is the transmittance across the visible portion of the solar spectrum where sensitivity to each wave length is weighted by the eye's response. Visible Transmittance Ratings are determined in accordance with NFRC 300.

1.05 **THERMAL PERFORMANCE RATING**

A. Glazing Type and Finish: Low-E Clear
   1. U Value: 0.33.
   2. Solar Heat Gain Coefficient (SHGC): 0.26
   3. Visible light transmission (Vtc):0.43

1.06 **SUBMITTALS**

A. Provide submittals under provisions of Division 1.

B. Product Data: Include the following for each type of door required.
   1. Construction details and fabrication methods.
   2. Profiles and dimensions of individual components.
   3. Data on hardware, accessories, and finishes.
   4. Recommendations for maintenance and cleaning of exposed surfaces.

C. Shop Drawings: Include information not fully detailed in manufacturer's product data and include the following for each type of door required.
   1. Fabrication, layout and installation details, including anchors.
   2. Typical door elevations.
   3. Full size section details of typical composite members, including reinforcement.
   4. Glazing details.
   5. Accessories.

D. Samples: Submit one corner section. Submit color samples as appropriate.

1.07 **QUALITY ASSURANCE**

A. Manufacturer Qualifications: Manufacturer shall have produced types of doors specified for not less than ten years, with similar projects that have been in successful use for not less than ten years.

B. Obtain aluminum clad wood door units through one source from a single manufacturer.

C. Safety Glass Standard: Provide products complying with testing requirements of United States Consumer Product Safety Commission's 16 CFR, Part 1201 for Category II materials or as prescribed by local codes. Provide products complying with ANSI Z97.1.
   1. Subject to compliance with project requirements, provide safety glass permanently marked with certification label of Safety Glazing Certification Council or another certification agency acceptable to authorities having jurisdiction.

D. Insulated Glass Certification: Provide insulated glass units permanently marked on spacers or on at least one component pane of units with appropriate certification label of inspecting agency.

E. Wood Components Sustainability Standards: Provide products that have been certified by independent third parties and labeled as having been produced in compliance with the accepted principles of sustainable forest management. Current certification systems that meet this standard of sustainability include the SFI™ or Sustainable Forestry Initiative

(independent third-party verification), the ISO 14001 EMS program, the FSC (Forest Stewardship Council) system, and the CSA (Canadian Standards Association) certification system.

1.08 **DELIVERY, STORAGE, AND HANDLING**

A. Deliver in original packaging, undamaged, with instructions.

B. Store off ground and protect from weather.

1.09 **LIMITED WARRANTY**

A. Insulated Glass: Provide manufacturer's limited warranty against failure of air seal due to defects in materials or workmanship for period of 20 years from date of manufacture.

B. Wood Components, Hardware, and Weatherstripping: Provide manufacturer's ten year limited warranty against defects in workmanship or materials which might unreasonably affect product's normal functioning.

C. Metal Clad Warranty:
1. Residential 2605 Metal Clad Warranty: Provide manufacturer's 30 year limited warranty on metal clad coating against cracking or checking; 25 year limited warranty on metal clad coating against color change; 20 year warranty on metal clad coating against chalking or peeling (adhesion loss).
2. Commercial 2605 Metal Clad Warranty: Provide manufacturer's 20 year limited warranty on metal clad coating against cracking, checking, color change, chalking or peeling (adhesion loss) in normal conditions; 10 year limited warranty on metal clad coating against cracking, checking, color change, chalking or peeling (adhesion loss) in extreme conditions.
3. 2604 Metal Clad Warranty: Provide manufacturer's 10 year limited warranty on metal clad coating against cracking, checking, color change, chalking or peeling (adhesion loss). (2604 powder coating available in Heritage Collection Textured Series only.)

PART 2 PRODUCTS

2.01 **MANUFACTURERS**

A. Acceptable Manufacturers: Sierra Pacific Windows, Red Bluff, CA, Medford and Merrill, WI. 800-824-7744; www.sierrapacificwindows.com

2.02 **MATERIALS**

A. Wood: Douglas fir, kiln dried to moisture content of 6 to 12 percent at time of fabrication; water-repellent preservative treated in accordance with WDMA I.S.4.
1. Grade and Grain:
a. Interior Exposed Wood: Solid clear, suitable for staining or painting.

B. Aluminum Cladding: Extruded 6063 T5 grade aluminum.
1. Frame Cladding Thickness: 0.062 inch.
2. Panel Cladding Thickness: 0.075 inch.

C. Glazing: Provide manufacturer's standard glazing material.

2.03 **COMPONENTS**

A. Hardware: No handleset, trim set, locking hardware or closures provided with the commercial wood or clad wood out-swinging door system. Hardware to be supplied by others.
1. Hinges: 4 inches by 4.5 inches ball-bearing, stainless steel [oil rubbed bronze finished], non-removable pin.
a. Provide three hinges on 82 inch height doors.
b. Provide four hinges on doors from 87 inches to 107 inches in height.
c. Provide five hinges on doors from 107 inches to 120 inches in height.
d. Provide two hinges on each door with non-removable pins (outswing only).

B. Sill: Extruded low profile (1/2 inch) aluminum sill (ADA compliant).

C. Weatherstripping:

1. Head and Side Jambs: Vinyl-covered foam weatherstrip.
2. Panel Tops: Leaf type weatherstrip.
3. Panel Bottoms: Mohair weatherstrip.

D. Drip Cap: Extruded aluminum clad drip cap factory mounted to frame.

E. Airspace Grille: 3/4 inch wide aluminum airspace grille between glass.

2.04 **FABRICATION**

A. Fabricate units that are reglazable from interior without dismantling.

B. Factory assemble unit to include frame, panels, weatherstripping, applied jamb extension, astragal weather-strip (as required), drip cap.

C. Basic Jamb:
1. Basic Jamb Width: 4-9/16 inches.
2. Factory apply clear extension jambs.

D. Panels:
1. Stile and Rail Thickness: 1-3/4 inches.
2. Stile Width: 5-5/8 inches.
3. Top Rail Width: 6-13/16 inches.
4. Bottom Rail Width: 12 inches (ADA compliant).
5. Attach solid, edge-glued rails to laminated engineered stiles with 5/8 inch by 4 inch fluted dowels. Seal with exterior glue.
6. Fabricate with phenolic high density laminate moisture vapor barrier laminated to both sides of stiles.

E. Glued and Laminated Components: Comply with ASTM D 5572 and ASTM D 5751.

F. Cladding:
1. Clad exterior wood surfaces with extruded aluminum.
2. Fabricate frame cladding to meet frame weatherstripping.
3. Seal clad frame corners with silicone, along with butyl pads, and secure with stainless steel screws.
4. Fabricate frame extrusion with continuous integral nail flange.
5. Fabricate exterior of frame with accessory groove to accept retrofit trim system or clad brickmould.

G. Glazing:
1. Fabricate door unit with single lite.

H. Sill:
1. Fabricate low profile sill to comply with ADA requirements.

2.05 **FINISHES**

A. Interior Exposed Wood: Unfinished for field staining.

B. Exterior Finish Cladding: To be manufacturer's pre-treated aluminum surface with baked on, electrostatically applied super durable polyester powder paint, zero-VOC finish conforming to specified AAMA 2604 or AAMA 2605 test procedures. Color specified from one of the seven available design collections. Please refer to our website www.sierrapacificwindows.com, or contact your SPW representative to view this expansive color palette.
1. Manufacturer's super durable polyester powder; 1.5 to 2.5 mil dry film thickness.
   a. Factory finish to comply with AAMA 2604. Color: Match building siding color.
      1) Textured Collection.

C. Drip Cap: Match frame color.

D. Sill:
1. Low-Profile, ADA compliant, ½" tall with 3 degree slope to the exterior.
2. Exposed Aluminum: Anodized bronze tone.

PART 3 EXECUTION

3.01 EXAMINATION

A. Site Verification of Conditions: Verify installation conditions previously established under other sections are acceptable for product installation in accordance with manufacturer's instructions.

B. Verify that field measurements are acceptable to suit door unit tolerances.

C. Verify sill plate is level.

D. Verify supports and anchors are correctly and securely positioned.

E. Verify wood frame walls are dry, clean, sound, well-nailed, free of voids, and without offsets at joints. Ensure that nail heads are driven flush with surfaces in opening and within 3 inches of the corner.

F. Scheduling of installation implies that substrate and conditions are prepared and ready for product installation. Proceeding with installation implies installer's acceptance of substrate and conditions.

3.02 PREPARATION

A. Coordinate door installation with wall flashings and other built-in components.

3.03 INSTALLATION

A. Install door units, hardware (as provided by others), and components in accordance with manufacturer's instructions and approved shop drawings, in compliance with specified performance requirements, and to provide weathertight construction.

B. Anchor components rigidly and securely to building structure, plumb and level, accurately fitted, and free from distortion or defects.

C. Fit exposed connections to form tight hairline joints.

3.04 ADJUSTING

A. Adjust doors, hardware, and weatherstripping to provide tight fit at contact points, smooth operation, and weather-tight closure.

3.05 CLEANING

A. Clean interior and exterior surfaces immediately after installation in accordance with manufacturer's recommendations for cleaning and maintenance.

B. Remove temporary labels from surfaces.

C. Remove and replace glass damaged during construction period.

3.06 PROTECTION

A. Protect door units from damage or deterioration until Substantial Completion.

B. Touch up damaged factory finishes.

END OF SECTION

SECTION 08 1416
FLUSH WOOD DOORS

PART 1 GENERAL

1.01 SECTION INCLUDES

A. Flush wood doors.

B. Wood door frames

1.02 RELATED REQUIREMENTS

A. Section 06 1000 - Rough Carpentry

B. Section 08 7100 - Door Hardware.

C. Section 09 9113 - Exterior Painting: Field painting.

D. Section 09 9123 - Interior Painting: Field painting.

1.03 REFERENCE STANDARDS

A. WDMA I.S. 1A - Interior Architectural Wood Flush Doors; 2013.

1.04 SUBMITTALS

A. Provide submittals under provisions of Division 1.

B. See Section 01 3000 - Administrative Requirements, for submittal procedures.

C. Product Data: Indicate door core materials and construction; veneer species, type and characteristics.

D. Shop Drawings: Show doors and frames, elevations, sizes, types, swings, undercuts, beveling, blocking for hardware, factory machining, factory finishing, cutouts for glazing and other details.

E. Samples: Submit two samples of door veneer, 6x6 inch in size illustrating wood grain, stain color, and sheen.

F. Certificate: Submit labels and certificates required by quality assurance and quality control programs.

G. Test Reports: Show compliance with specified requirements for the following:

H. Manufacturer's Installation Instructions: Indicate special installation instructions.

I. Specimen warranty.

J. Warranty, executed in Owner's name.

1.05 QUALITY ASSURANCE

A. Manufacturer Qualifications: Company specializing in manufacturing the products specified in this section, with not less than five years of documented experience.

B. Installer Qualifications: Company specializing in performing work of the type specified in this section, with not less than three years of documented experience.

1.06 DELIVERY, STORAGE, AND HANDLING

A. Package, deliver and store doors in accordance with specified quality standard.

B. Accept doors on site in manufacturer's packaging, and inspect for damage.

C. Protect doors with resilient packaging sealed with heat shrunk plastic; do not store in damp or wet areas or areas where sunlight might bleach veneer; seal top and bottom edges clear sealer if stored more than one week, and break seal on site to permit ventilation.

1.07 WARRANTY

A. See Section 01 7800 - Closeout Submittals, for additional warranty requirements.

B. Interior Doors: Provide manufacturer's warranty for the life of the installation.

C. Include coverage for delamination of veneer, warping beyond specified installation tolerances, defective materials, and telegraphing core construction.

PART 2 PRODUCTS

2.01 MANUFACTURERS

A. Wood Veneer Faced Doors:
   1. Oregon Door; Architectural Series: www.oregondoor.com/#sle.
   2. Substitutions: See Section 01 6000 - Product Requirements.

2.02 DOORS AND PANELS

A. Doors: See drawings for locations and additional requirements.
   1. Quality Standard: Custom Grade, Heavy Duty performance, in accordance with WDMA I.S.

B. Interior Doors: 1-3/4 inches thick unless otherwise indicated; flush construction.
   1. Provide solid core doors at each location.

2.03 DOOR AND PANEL CORES

A. Non-Rated Solid Core and 20 Minute Rated Doors: Type particleboard core (PC) or structural composite lumber core (SCLC), plies and faces as indicated.

2.04 DOOR FACINGS

A. Veneer Facing for Transparent Finish: White Maple, HPVA Grade A, plain sliced (flat cut), with book match between leaves of veneer, balance match of spliced veneer leaves assembled on door or panel face.
   1. Vertical Edges: Same species as face veneer.

B. Facing Adhesive: Type II - water resistant.

2.05 DOOR CONSTRUCTION

A. Fabricate doors in accordance with door quality standard specified.

B. Cores Constructed with stiles and rails:
   1. Provide solid blocks at lock edge and top of door for closer for hardware reinforcement.
   2. Provide solid blocking for other throughbolted hardware.

C. Factory machine doors for hardware other than surface-mounted hardware, in accordance with hardware requirements and dimensions.

D. Factory fit doors for frame opening dimensions identified on shop drawings, with edge clearances in accordance with specified quality standard.

E. Provide edge clearances in accordance with the quality standard specified.

2.06 FINISHES - WOOD VENEER DOORS

A. Finish work in accordance with WDMA I.S. 1A for grade specified and as follows:
   1. Transparent:
      a. System - TR-4, Conversion Varnish.
      b. Sheen: Semigloss.

B. Seal door top edge with clear sealer to match door facing.

2.07 ACCESSORIES

A. Wood door frames, match existing interior door frames.

B. Door Hardware: See Section 08 7100.

PART 3 EXECUTION

3.01 EXAMINATION

A. Verify existing conditions before starting work.

B. Verify that opening sizes and tolerances are acceptable.

C. Do not install doors in frame openings that are not plumb or are out-of-tolerance for size or alignment.

3.02 **INSTALLATION**

A. Install doors in accordance with manufacturer's instructions and specified quality standard.
   1. Install fire-rated doors in accordance with NFPA 80 requirements.
   2. Install smoke and draft control doors in accordance with NFPA 105 requirements.

B. Factory-Finished Doors: Do not field cut or trim; if fit or clearance is not correct, replace door.

C. Use machine tools to cut or drill for hardware.

D. Coordinate installation of doors with installation of frames and hardware.

E. Coordinate installation of glazing.

3.03 **TOLERANCES**

A. Comply with specified quality standard for fit and clearance tolerances.

B. Comply with specified quality standard for telegraphing, warp, and squareness.

3.04 **ADJUSTING**

A. Adjust doors for smooth and balanced door movement.

B. Adjust closers for full closure.

END OF SECTION

SECTION 08 5200
WOOD WINDOWS

PART 1 GENERAL

1.01 SECTION INCLUDES

A. Aluminum clad wood direct glaze plus frame.

B. Accessories, including glazing, louvers, and matching panels.

1.02 RELATED REQUIREMENTS

A. Section 06 1000 - Rough Carpentry

B. Section 09 9113 - Exterior Painting: Field painting.

C. Section 09 9123 - Interior Painting: Field painting.

1.03 REFERENCE STANDARDS

A. American Architectural Manufacturers Association (AAMA):
1. AAMA/WDMA/CSA 101/I.S.2/A440-08 "NAFS - North American Fenestration Standard/Specification for windows, doors and skylights."
2. AAMA/WDMA/CSA 101/I.S.2/A440-11 "NAFS 2011 – North American Fenestration Standard/Specification for windows, doors and skylights."
3. AAMA 2604 "Voluntary Specification, Performance Requirements and Test Procedures for High Performance Organic Coatings on Aluminum Extrusions and Panels."
4. AAMA 2605 "Voluntary Specification, Performance Requirements and Test Procedures for Superior Performing Organic Coatings on Aluminum Extrusions and Panels."

B. American National Standards Institute (ANSI):
1. ANSI Z97.1 "Safety Glazing Materials Used in Buildings – Safety Performance Specifications and Methods of Test."

C. American Society for Testing and Materials (ASTM):
1. ASTM B 136 "Standard for Measurement of Stain Resistance of Anodic Coatings on Aluminum."
2. ASTM B 137 "Standard for Measurement of Coating Mass Per Unit Area on Anodically Coated Aluminum."
3. ASTM B 244 "Standard for Measurement of Thickness of Anodic Coatings on Aluminum and of Other Nonconductive Coatings or Nonmagnetic Basis Metals with Eddy Current Instruments."
4. ASTM C 1036 "Standard Specification for Flat Glass."
5. ASTM C 1048 "Standard Specification for Heat-Treated Flat Glass – Kind HS, Kind FT Coated and Uncoated Glass."
6. ASTM D 3359 "Standard Test Methods for Measuring Adhesion by Tape Test."
7. ASTM D 5235 "Standard Test Method for Microscopical Measurement of Dry Film Thickness of Coatings on Wood Products."
8. ASTM D 5572 "Standard Specification for Adhesives Used for Finger Joints in Nonstructural Lumber Products."
9. ASTM D 5751 "Standard Specification for Laminate Joints in Nonstructural Lumber Products."
10. ASTM E 283 "Standard Test Method for Rate of Air Leakage Through Exterior Windows, Curtain Walls, and Doors."
11. ASTM E 330 "Standard Test Method for Structural Performance of Exterior Windows, Curtain Walls, and Doors by Uniform Static Air Pressure Difference."
12. ASTM E 547 "Standard Test Method for Water Penetration of Exterior Windows, Curtain Walls, and Doors by Cyclic Static Air Pressure Differential."

D. Consumer Products Safety Commission:
1. 16 CFR, Part 1201 "Safety Standard for Architectural Glazing Material."

E. National Fenestration Rating Council (NFRC):

1. NFRC 100 "Procedure for Determining Fenestration Products U-Factors."
2. NFRC 200 "Procedure for Determining Fenestration Product Solar Heat Gain Coefficients at Normal Incidence."
3. NFRC 300 "Procedure for Determining Solar Optical Properties of Simple Fenestration Product."

F. Window and Door Manufacturers Association (WDMA):
1. AAMA/WDMA/CSA 101/I.S.2/A440-08 "NAFS - North American Fenestration Standard/Specification for windows, doors and skylights."
2. AAMA/WDMA/CSA 101/I.S.2/A440-11 "NAFS 2011 – North American Fenestration Standard/Specification for windows, doors and skylights."
3. WDMA I.S.4 "Industry Standard for Water Repellant Preservative Non-Pressure Treatment for Millwork."

1.04 DEFINITIONS

A. U Cog: Units Btu/(hr•ft^2•°F), center-of-glass U value. Center-of-glass is the central glazed portion of the window which one sees through that is more than 2.5 inches from sightline.

B. U/R Total: Value of total unit calculated per NFRC 100 using window and frame. U Factor is the primary measure of winter energy efficiency. A low U Factor means less heat passes through the unit due to exterior air and room-side air temperature differences. R Value = 1/U.

C. SHGC: The solar heat gain coefficient of the total fenestration system represents the solar heat gain through the system relative to the incident solar radiation striking the exterior surface. Solar Heat Gain Ratings are determined in accordance with NFRC 200.

D. Vtc: The visible transmittance of the total fenestration system is the transmittance across the visible portion of the solar spectrum where sensitivity to each wave length is weighted by the eye's response. Visible Transmittance Ratings are determined in accordance with NFRC 300.

1.05 PERFORMANCE REQUIREMENT

A. Class CW-PG40, AAMA/WDMA/CSA 101/I.S.2/A440-08:
1. Air Infiltration, ASTM E 283: Maximum 0.3 cfm/ft^2. at 1.57 psf. (25 mph).
2. Water Resistance, ASTM E 547: No leakage at 6.00 psf. (48.41 mph).
3. Structural Performance, ASTM E 330: Withstands up to +/-40 psf. (125 mph).

1.06 THERMAL PERFORMANCE RATING

A. Glazing Type and Finish: Low-E, clear.
1. U Value: 0.32
2. Solar Heat Gain Coefficient (SHGC): 0.38
3. Visible light transmission (Vtc): 0.65

1.07 SUBMITTALS

A. Provide submittals under provisions of Division 1.

B. Product Data: Include the following for each type of window required.
1. Construction details and fabrication methods.
2. Profiles and dimensions of individual components.
3. Data on accessories and finishes.
4. Recommendations for maintenance and cleaning of exposed surfaces.

C. Shop Drawings: Include information not fully detailed in manufacturer's product data and include the following for each type of window required.
1. Layout and installation details, including anchors.
2. Elevations at 1/4 inch = 1 foot (1:50) scale and typical window unit elevations at 3/4 inch = 1 foot (1:20) scale.
3. Sections at 3 inch = 1 foot (1:4) scale, of typical composite members, including reinforcement and stiffners.
4. Glazing details.
5. Accessories.

D. Samples: Submit one corner section. Submit color samples as appropriate.

1.08 **QUALITY ASSURANCE**

A. Manufacturer Qualifications: Manufacturer shall have produced types of windows specified for not less than ten years, with similar projects that have been in successful use for not less than ten years.

B. Obtain wood window units through one source from a single manufacturer.

C. Safety Glass Standard: Provide products complying with testing requirements of United States Consumer Product Safety Commission's 16 CFR, Part 1201 for Category II materials or as prescribed by local codes. Provide products complying with ANSI Z97.1.
   1. Subject to compliance with project requirements, provide safety glass permanently marked with certification label of Safety Glazing Certification Council or another certification agency acceptable to authorities having jurisdiction.

D. Insulated Glass Certification: Provide insulated glass units permanently marked on spacers or on at least one component pane of units with appropriate certification label of inspecting agency.

E. Wood Components Sustainability Standards: Provide products that have been certified by independent third parties and labeled as having been produced in compliance with the accepted principles of sustainable forest management. Current certification systems that meet this standard of sustainability include the SFI™ or Sustainable Forestry Initiative (independent third-party verification), the ISO 14001 EMS program, the FSC (Forest Stewardship Council) system, and the CSA (Canadian Standards Association) certification system.

1.09 **DELIVERY, STORAGE, AND HANDLING**

A. Ship units with both temporary and permanent NFRC labeling.
   1. Temporary label shall indicate that the unit is NFRC certified and include brief product description and thermal or energy performance values.
   2. Permanent label shall include manufacturer identification and performance tracking for life of product.

B. Deliver in original packaging, undamaged, with instructions.

C. Store off ground and protect from weather.

1.10 **WARRANTY**

A. Warranty: Provide manufacturer's standard warranty as follows.
   1. Workmanship and Materials: 10-year limited warranty.
   2. Insulating Glass: 20-year limited warranty (Residential and Commercial).
   3. Exterior Clad Finish:
      a. Commercial 2605 Metal Clad: 20-year limited warranty on metal clad coating against cracking, checking, color change, chalking or peeling (adhesion loss) in normal conditions; 10 year limited warranty on metal clad coating against cracking, checking, color change, chalking or peeling (adhesion loss) in extreme conditions.
      b. Residential 2605 Metal Clad: 30-year limited warranty on metal clad coating against cracking or checking.
      c. Commercial and Residential 2604 Metal Clad Warranty: 10-year limited warranty on metal clad coating against cracking, checking, color change, chalking or peeling (adhesion loss).
   4. Interior Finish: 2-year limited warranty.
   5. Warranty Labor: 2-year limited warranty.

PART 2 PRODUCTS

2.01 **MANUFACTURERS**

A. Acceptable Manufacturers: Sierra Pacific Windows, Red Bluff, CA, Medford and Merrill, WI. 800-824-7744; www.sierrapacificwindows.com

2.02 **MATERIALS**

A. Wood:
   1. Species: Douglas Fir, kiln dried to moisture content of 6 to 12 percent at time of fabrication; water-repellent preservative treated in accordance with WDMA I.S.4.
   2. Interior Exposed Wood: Solid clear, suitable for staining or painting.

B. Aluminum Cladding: 0.062 inch thick extruded 6063 T5 grade aluminum.

C. Glazing: Provide manufacturer's standard glazing material.

2.03 **COMPONENTS**

A. Drip Cap: Extruded aluminum clad drip cap factory mounted to frame.

2.04 **FABRICATION**

A. Basic Jamb:
   1. Basic Jamb Width: 4-9/16 inches.
   2. Factory apply clear extension jambs; one piece extension.

2.05 **FINISHES**

A. Interior Exposed Wood: Unfinished for field staining.

B. Exterior Finish Cladding: To be manufacturer's pre-treated aluminum surface with baked on, electrostatically applied super durable polyester powder paint, zero-VOC finish conforming to specified AAMA 2604 or AAMA 2605 test procedures. Color specified from one of the seven available design collections. Please refer to our website www.sierrapacificwindows.com, or contact your SPW representative to view this expansive color palette.
   1. Manufacturer's super durable polyester powder; 1.5 to 2.5 mil dry film thickness.
      a. Factory finish to comply with AAMA 2604. Color: Match building siding color.
         1) Textured Collection.

C. Drip Cap: Match frame color.

PART 3 EXECUTION

1.11 **EXAMINATION**

A. Site Verification of Conditions: Verify installation conditions previously established under other sections are acceptable for product installation in accordance with manufacturer's instructions.

B. Verify that field measurements are acceptable to suit window unit tolerances.

C. Verify sill plate is level.

D. Verify supports and anchors are correctly and securely positioned.

E. Verify wood frame walls are dry, clean, sound, well-nailed, free of voids, and without offsets at joints. Ensure that nail heads are driven flush with surfaces in opening and within 3 inches of corner.

F. Scheduling of installation implies that substrate and conditions are prepared and ready for product installation. Proceeding with installation implies installer's acceptance of substrate and conditions.

1.12 **PREPARATION**

A. Coordinate window installation with wall flashings and other built-in components.

1.13 **INSTALLATION**

A. Install window units and components in accordance with manufacturer's instructions and approved shop drawings, in compliance with specified performance requirements, and to provide weather-tight construction.

B. Anchor components rigidly and securely to building structure, plumb and level, accurately fitted, and free from distortion or defects.

C. Fit exposed connections to form tight hairline joints.

1.14 **CLEANING**

A. Clean interior and exterior surfaces immediately after installation in accordance with manufacturer's recommendations for cleaning and maintenance.

B. Remove temporary labels from surfaces.

C. Remove and replace glass damaged during construction period.

1.15 **PROTECTION**

A. Protect window units from damage or deterioration until Substantial Completion.

END OF SECTION

SECTION 08 7100
DOOR HARDWARE

PART 1 GENERAL

1.01 SECTION INCLUDES

A. Hardware for wood doors.

B. Lock cylinders for doors that hardware is specified in other sections.

1.02 RELATED REQUIREMENTS

A. Section 08 1416 - Flush Wood Doors.

1.03 REFERENCES

A. BHMA A156.18 - American National Standard for Materials and Finishes; Builders Hardware Manufacturers Association, Inc.; 2012 (ANSI/BHMA A156.18).

B. DHI WDHS.3 - Recommended Locations for Architectural Hardware for Flush Wood Doors; Door and Hardware Institute; 1993; also in WDHS-1/WDHS-5 Series, 1996.

C. ICC A117.1 - Accessible and Usable Buildings and Facilities; International Code Council; 2009 (ANSI).

D. NFPA 80 - Standard for Fire Doors and Other Opening Protectives; 2013.

E. UL (BMD) - Building Materials Directory; Underwriters Laboratories Inc.; current edition.

1.04 QUALITY ASSURANCE

A. Special Requirements of Regulatory Agencies
   1. Accessibility: ADA Standards and ICC A117.1.

B. Single Source: Where several manufacturers are specified for one type of hardware, use only products of one manufacturer.

C. Supplier’s Qualifications:
   1. Hardware supplier shall have and maintain a factory direct status with all manufacturer’s specified or approved.
   2. Supplier shall employ an Architectural Hardware Consultant (AHC) who will coordinate and produce required submittals and who is available during the course of the project for meetings with the Architect and Owner.
   3. Approved suppliers: Bell Hardware- Wilsonville; American Direct- Portland; Chown Hardware- Portland. All other potential suppliers who meet the above requirements must apply for approval prior to bid.

D. Installer’s Qualifications:
   1. Locally recognized installer of commercial hardware products and an employer of workers trained and approved by product manufacturers and who is available during the course of the Work to consult with Contractor, Architect, and Owner about door hardware and keying.

1.05 PRE-INSTALLATION CONFERENCE

A. Prior to commencement of hardware work, schedule meeting at mutually agreeable time to include, Owner, Contractor, Contractor's field superintendent, hardware installer, and other interested parties to review methods and procedures to be used to achieve end results.

1.06 SUBMITTALS

A. See Section 01 3000 - Administrative Requirements, for submittal procedures.

B. Product Data
   1. Hardware: Manufacturer's specifications, maintenance and keying manual, and installation instructions of finish hardware. Include photographs, marked templates and other data required to show compliance with these specifications.

C. Hardware Schedule: List manufacturer's name with manufacturer's hardware number together with finishes designation. Include separate schedule of key and masterkey system.

Owner's review shall not relieve Contractor of responsibility from requirement to provide complete hardware for project.

D. Maintenance Data: Include data on operating hardware, lubrication requirements, and inspection procedures related to preventative maintenance.

E. Keying: All final keying furnished by Owner.

F. Warranty: Submit manufacturer's warranty and ensure that forms have been completed in Owner's name and registered with manufacturer.

G. Templates: After hardware schedule has been approved, furnish templates as soon as possible.

1.07 **REGULATORY REQUIREMENTS**

A. Conform to applicable code for requirements applicable to fire rated doors and frames.

1.08 **DELIVERY**

A. Delivery of Hardware: Deliver in unopened containers fully identified with manufacturer's name, number and finish.

B. Delivery of Keys: Keys provided by Owner.

1.09 **COORDINATION**

A. Coordinate the work with other directly affected sections involving manufacture or fabrication of internal reinforcement for door hardware.

B. Furnish templates for door and frame preparation.

C. Coordinate Owner's keying requirements during the course of the Work.

1.10 **WARRANTY**

A. Warrant locksets and component parts against mechanical failure for period of 10 years. Warrant panic hardware against mechanical failure for period of 3 years. Warrant door closers against mechanical failure for a period of 30 years. Warrant auto door operators against mechanical failure for a period of 2 years.

B. Upon notification of defects within warranty period, make necessary repairs and replacements at Owner's convenience.

1.11 **MAINTENANCE PRODUCTS**

A. Provide maintenance tools and accessories supplied by hardware component manufacturer.

B. Maintenance Material: Deliver to Owner at project site the following items:
   1. Provide special wrenches and tools applicable to each different or special hardware component.
   2. One set of Maintenance Manuals for locksets, closers and exit devices.

1.12 **CLOSEOUT SUBMITTALS**

A. As specified in Section 01 7800.

B. Operation and maintenance data for review and approval.
   1. Operation and maintenance data for hardware.
   2. Final typed finish hardware schedule that includes any corrections and changes to the submittal schedule.

PART 2 PRODUCTS

2.01 **ACCEPTABLE MANUFACTURERS**

A. Model numbers of the following manufacturers have been selected based on style and function.
   1. Other manufacturer's products may be used if they are approved by means of a substitution request and meet the requirements of the Uniform Federal Accessibility Standards. Locksets, Keying, Panic Hardware, Door Closers and Auto Door Operators are the required Owner Standards and cannot be substituted.

2.02 HARDWARE FINISHES

A. Produce finishes as stated herein. Finishes of same designation, that come from more than one source, shall match when items are viewed at arms length and approximately 2 feet apart.
   1. Unless otherwise specified, match finish of each item of hardware with finish selected for lock sets and latches.

2.03 FASTENERS

A. Provide concealed fastenings wherever possible. Use of self-tapping or sheet metal screws prohibited. Through-bolting prohibited.
   1. Concealed Fasteners: Furnish hardware items with appropriate type and length of screws or other fastenings suitable to ensure permanent anchorage.
   2. Exposed Fasteners: Furnish hardware with countersunk Phillips flat head and oval head type screws where concealed fastenings is not possible. Match screw finish or color to hardware item being fastened.

2.04 BUTT HINGES

A. General: Full mortise type, with flush barrels; non-magnetic stainless steel pins, flat button tips, and square corners; template, bearing types and weights as specified. Pack hinges with appropriate type screws required by door and frame construction.
   1. Exterior Hinges: By door manufacturer.
   2. Interior Hinges: Including exterior inswinging doors; wrought steel, unless otherwise specified, non-rising loose pins.

B. Hinge Sizes: Where projecting door trim is encountered, increase hinge width to clear trim with minimum barrel projection.
   1. Hinges Per Door

Door Height	Hinges Required
Over 60 inches through 95 inches	3

C. Manufacturers and Types
   1. Door Butts : As shown in hardware sets.
   2. Manufacturers:
      a. Bommer
      b. Ives
      c. Stanley
   3. Finishes: BHMA 652 –satin chrome. 630 satin stainless, where specified.

2.05 LOCKSETS

A. General: Mortise type, except where noted otherwise.
   1. Schlage L series, 07A lever; Schlage ND series, ATH lever; design and function as specified in the hardware sets.
   2. No substitution.- Owner standard.
   3. Finishes: BHMA 626 satin chrome.

2.06 OVERHEAD SURFACE CLOSERS & AUTO DOOR OPERATORS

A. General:
   1. Heavy duty with full rack and pinion independent closing speed and latch regulating valves and adjustable backcheck; single size with adjustable power spring and adjustment indicator dial to permit sizing for door and installation requirements; regular or parallel arms as indicated.
   2. Parallel arm closers must have one piece solid forged arms with bronze bushings.
   3. All other closers to have forged steel main arms.
   4. Pressure relief valves are not permitted.
   5. Furnish closers for 180 degree door opening where partition arrangement will permit.
   6. Furnish delayed action closers where indicated in the hardware schedule.

B. Size

1. Size to properly close door automatically, smoothly, and tightly against door frame under operating conditions; manufacturer's published recommended sizes are minimum.
   a. Take special precaution to compensate for auxiliary hardware, oversized doors, stack action in shafts, and differential pressures caused by air conditioning system.
2. Operating Force: Pull or push force required to operate door. Force measured at right angle to door and on centerline of specified backset.
   a. Exterior Doors: Maximum 8.5 pounds (3.8 kg).
   b. Interior Doors: Maximum 5 pounds (2.3 kg).
3. Verify head condition prior to furnishing door closers; make required modifications or changes due to conditions at no cost to Owner.
4. Install on side of door away from corridors or public spaces.
5. Provide stick-on template & self-tapping screws for ease of installation.

C. Types and Manufacturers:
   1. Manufacturers: LCN, no substitution.- Owner standard.
   2. Finish: 689 aluminum.
   3. Function: See Schedule.
      a. Pull side of doors: 4011 Series.
      b. Push side of doors: 4111EDA Series.
      c. Closer to be mounted on room side of doors - not on corridor or hall side. Closers may not be thru bolted through door.

2.07 **DOOR SEALS/GASKETS:**

A. General: Single lengths; apply to stop edge. Butt edges at corners to form airtight joints.

B. Manufacturers and Type
   1. Zero 188S or 488S (where specified). Equivalents by Pemko or NGP are approved.

2.08 **THRESHOLDS AND SADDLES**

A. General: Single length, width required to align with both jamb faces. Where required for door closer adjustment, provide with matching finish removable threaded valve hole plugs for access to adjusting screws.

B. Threshold height shall allow for maximum deviation between landing levels of 1/2 inch (12 mm). Maximum height of threshold; 1/2 inch (12 mm).

C. Manufacturers and type as indicated on hardware schedule. Finish: Aluminum.

D. Manufacturers:
   1. Zero. Equivalents by Pemko or NGP are approved.

2.09 **KEYS AND KEYING**

A. Provide a construction key system with (12) keys for use during construction period. Plastic cores and/or keys are not permitted.

B. Final Cylinders & Keys: Key into the Owner’s existing Schlage master key system. Provide per hardware groups. Coordinate with Owner regarding keyway, correct part numbers and required key quantities.

C. Installation of Cylinders: Coordinate with Owner at substantial completion.

2.10 **HARDWARE GROUPS**

A. All hardware to match district standards.

B. Verify hardware groups with architect.

PART 3 EXECUTION

3.01 EXAMINATION

A. Verify that doors and frames are ready to receive this work; labeled, fire-rated doors and frames are properly installed, and dimensions are as indicated on shop drawings.

3.02 INSTALLATION

A. Install hardware in accordance with manufacturer's instructions and applicable codes.

B. Install hardware on fire-rated doors and frames in accordance with applicable codes and NFPA 80.

C. Use templates provided by hardware item manufacturer.

D. Door Hardware Mounting Heights: Distance from finished floor to center line of hardware item. As indicated in following list; unless noted otherwise in Door Hardware Schedule or on drawings.

E. Set exterior door thresholds with full-width bead of elastomeric sealant at each point of contact with floor providing a continuous weather seal; anchor thresholds with stainless steel countersunk screws.

3.03 ADJUSTING

A. Adjust work under provisions of Section 01 7000 - Execution and Closeout Requirements.

B. Adjust hardware for smooth operation.

C. Adjust gasketing for complete, continuous seal; replace if unable to make complete seal.

3.04 PROTECTION

A. Protect finished Work under provisions of Section 01 7000 - Execution and Closeout Requirements.

B. Do not permit adjacent work to damage hardware or finish.

END OF SECTION

SECTION 09 2116
GYPSUM BOARD ASSEMBLIES

PART 1 GENERAL

1.01 SECTION INCLUDES

A. Gypsum wallboard.
B. Cementitious backing board
C. Joint treatment and accessories.
D. Textured finish system.

1.02 RELATED REQUIREMENTS

A. Section 06 1000 - Rough Carpentry: Building framing and sheathing.
B. Section 06 1000 - Rough Carpentry: Wood blocking product and execution requirements.
C. Section 07 2100 - Thermal Insulation: Acoustic insulation.
D. Section 07 9200 - Joint Sealants: Sealing acoustical gaps in construction other than gypsum board or plaster work.

1.03 REFERENCE STANDARDS

A. ASTM C475/C475M - Standard Specification for Joint Compound and Joint Tape for Finishing Gypsum Board 2017.
B. ASTM C557 - Standard Specification for Adhesives for Fastening Gypsum Wallboard to Wood Framing 2003 (Reapproved 2017).
C. ASTM C840 - Standard Specification for Application and Finishing of Gypsum Board 2019b.
D. ASTM C1002 - Standard Specification for Steel Self-Piercing Tapping Screws for Application of Gypsum Panel Products or Metal Plaster Bases to Wood Studs or Steel Studs 2018.
E. ASTM C1047 - Standard Specification for Accessories For Gypsum Wallboard and Gypsum Veneer Base 2019.
F. ASTM C1396/C1396M - Standard Specification for Gypsum Board 2017.
G. GA-216 - Application and Finishing of Gypsum Panel Products 2016.

PART 2 PRODUCTS

2.01 GYPSUM BOARD ASSEMBLIES

A. Provide completed assemblies complying with ASTM C840 and GA-216.

2.02 BOARD MATERIALS

A. Manufacturers - Gypsum-Based Board:
   1. American Gypsum Company: www.americangypsum.com/#sle.
   2. CertainTeed Corporation: www.certainteed.com/#sle.
   3. Georgia-Pacific Gypsum: www.gpgypsum.com/#sle.
B. Gypsum Wallboard: Paper-faced gypsum panels as defined in ASTM C1396/C1396M; sizes to minimize joints in place; ends square cut.
   1. Application: Use for vertical surfaces and ceilings, unless otherwise indicated.
   2. Thickness:
      a. Vertical Surfaces: 1/2 inch (13 mm).
      b. Ceilings: 1/2 inch (13 mm).
   3. Mold Resistant Paper Faced Products:
      a. CertainTeed Corporation; M2Tech 1/2" Moisture & Mold Resistant Drywall: www.certainteed.com/#sle.
C. Backing Board For Non-Wet Areas: Water-resistant gypsum backing board as defined in ASTM C1396/C1396M; sizes to minimum joints in place; ends square cut.
   1. Application: Vertical surfaces behind thinset tile, except in wet areas.

2. Edges: Tapered.

D. Ceiling Board: Special sag resistant gypsum ceiling board as defined in ASTM C1396/C1396M; sizes to minimize joints in place; ends square cut.
1. Application: Ceilings, unless otherwise indicated.
2. Thickness: 1/2 inch (13 mm).
3. Edges: Tapered.

2.03 **GYPSUM WALLBOARD ACCESSORIES**

A. Finishing Accessories: ASTM C1047, galvanized steel or rolled zinc, unless noted otherwise.
1. Types: As detailed or required for finished appearance.

B. Beads, Joint Accessories, and Other Trim: ASTM C1047, rigid plastic, galvanized steel, or rolled zinc, unless noted otherwise.

C. Joint Materials: ASTM C475/C475M and as recommended by gypsum board manufacturer for project conditions.

D. Textured Finish Materials: Latex-based compound; plain.

E. Screws for Fastening of Gypsum Panel Products to Cold-Formed Steel Studs Less than 0.033 inches (0.84 mm) in Thickness and Wood Members: ASTM C1002; self-piercing tapping screws, corrosion-resistant.

F. Adhesive for Attachment to Wood, ASTM C557 and Metal

PART 3 EXECUTION

3.01 **EXAMINATION**

A. Verify that project conditions are appropriate for work of this section to commence.

3.02 **BOARD INSTALLATION**

A. Comply with ASTM C840, GA-216, and manufacturer's instructions. Install to minimize butt end joints, especially in highly visible locations.

B. Single-Layer Nonrated: Install gypsum board in most economical direction, with ends and edges occurring over firm bearing.

3.03 **INSTALLATION OF TRIM AND ACCESSORIES**

A. Control Joints: Place control joints consistent with lines of building spaces and as indicated.
1. Not more than 30 feet (10 meters) apart on walls and ceilings over 50 feet (16 meters) long.

B. Corner Beads: Install at external corners, using longest practical lengths.

C. Edge Trim: Install at locations where gypsum board abuts dissimilar materials and as indicated.

3.04 **JOINT TREATMENT**

A. Finish gypsum board in accordance with levels defined in ASTM C840, as follows:
1. Level 4: Walls and ceilings to receive paint finish or wall coverings, unless otherwise indicated.
2. Level 1: Fire-resistance-rated wall areas above finished ceilings, whether or not accessible in the completed construction.

B. Tape, fill, and sand exposed joints, edges, and corners to produce smooth surface ready to receive finishes.
1. Feather coats of joint compound so that camber is maximum 1/32 inch (0.8 mm).
2. Taping, filling, and sanding are not required at surfaces behind adhesive applied ceramic tile and fixed cabinetry.

3.05 **TEXTURE FINISH**

A. Apply finish texture coating by means of spraying apparatus in accordance with manufacturer's instructions and to match approved sample. Confirm acceptance with District and Architect.

B. Texture Required: Match existing.

3.06 **TOLERANCES**

A. Maximum Variation of Finished Gypsum Board Surface from True Flatness: 1/8 inch in 10 feet (3 mm in 3 m) in any direction.

END OF SECTION

SECTION 09 3000
TILING

PART 1 GENERAL

1.01 SECTION INCLUDES

A. Tile for wall applications.

B. Non-ceramic trim.

1.02 RELATED REQUIREMENTS

A. Section 07 9200 - Joint Sealants: Sealing joints between tile work and adjacent construction and fixtures.

B. Section 09 2116 - Gypsum Board Assemblies: Tile backer board.

1.03 REFERENCE STANDARDS

A. ANSI A108.1a - American National Standard Specifications for Installation of Ceramic Tile in the Wet-Set Method, with Portland Cement Mortar; 2017.

B. ANSI A108.1b - American National Standard Specifications for Installation of Ceramic Tile on a Cured Portland Cement Mortar Setting Bed with Dry-Set or Latex-Portland Cement Mortar; 2017.

C. ANSI A108.1c - Specifications for Contractors Option: Installation of Ceramic Tile in the Wet-Set Method with Portland Cement Mortar or Installation of Ceramic Tile on a Cured

D. Portland Cement Mortar Bed with Dry-Set or Latex-Portland Cement; 1999 (Reaffirmed 2016).

E. ANSI A108.2 - American National Standard General Requirements: Materials, Environmental and Workmanship; 2019.

F. ANSI A108.4 - American National Standard Specifications for Installation of Ceramic Tile with Organic Adhesives or Water Cleanable Tile-Setting Epoxy Adhesive; 2009 (Revised).

G. ANSI A108.5 - American National Standard Specifications for Installation of Ceramic Tile with Dry-Set Portland Cement Mortar or Latex-Portland Cement Mortar; 1999 (Reaffirmed 2010).

H. ANSI A108.6 - American National Standard Specifications for Installation of Ceramic Tile with Chemical Resistant, Water Cleanable Tile-Setting and -Grouting Epoxy; 1999 (Reaffirmed 2010).

I. ANSI A108.8 - American National Standard Specifications for Installation of Ceramic Tile with Chemical Resistant Furan Resin Mortar and Grout; 1999 (Reaffirmed 2010).

J. ANSI A108.9 - American National Standard Specifications for Installation of Ceramic Tile with Modified Epoxy Emulsion Mortar/Grout; 1999 (Reaffirmed 2010).

K. ANSI A108.10 - American National Standard Specifications for Installation of Grout in Tilework; 2017.

L. ANSI A108.11 - American National Standard Specifications for Interior Installation of Cementitious Backer Units; 2018.

M. ANSI A108.12 - American National Standard for Installation of Ceramic Tile with EGP (Exterior Glue Plywood) Latex-Portland Cement Mortar; 1999 (Reaffirmed 2010).

N. ANSI A108.13 - American National Standard for Installation of Load Bearing, Bonded, Waterproof Membranes for Thin-Set Ceramic Tile and Dimension Stone; 2005 (Reaffirmed 2016).

O. ANSI A108.19 - American National Standard Specifications for Interior Installation of Gauged Porcelain Tiles and Gauged Porcelain Tile Panels/Slabs by the Thin-Bed Method Bonded with Modified Dry-Set Cement Mortar or Improved Modified Dry-Set Cement Mortar; 2017.

P. ANSI A118.3 - American National Standard Specifications for Chemical Resistant, Water Cleanable Tile-Setting and -Grouting Epoxy and Water Cleanable Tile-Setting Epoxy Adhesive; 2013 (Revised).

Q. ANSI A118.10 - American National Standard Specifications for Load Bearing, Bonded, Waterproof Membranes For Thin-Set Ceramic Tile And Dimension Stone Installation; 2014.

R. ANSI A137.1 - American National Standard Specifications for Ceramic Tile; 2012.

S. TCNA (HB) - Handbook for Ceramic, Glass, and Stone Tile Installation; 2019.

1.04 **ADMINISTRATIVE REQUIREMENTS**

A. Preinstallation Meeting: Convene a preinstallation meeting one week before starting work of this section; require attendance by affected installers.

1.05 **SUBMITTALS**

A. See Section 01 3000 - Administrative Requirements, for submittal procedures.

B. Product Data: Provide manufacturers' data sheets on tile, mortar, grout, and accessories. Include instructions for using grouts and adhesives.

C. Samples: Mount tile and apply grout on two plywood panels, minimum 18 by 18 inches in size illustrating pattern, color variations, and grout joint size variations.

D. Maintenance Materials: Furnish the following for Owner's use in maintenance of project.
   1. See Section 01 6000 - Product Requirements, for additional provisions.
   2. Extra Tile: 1 percent of each size, color, and surface finish combination, but not less than 20 tiles of each type.

1.06 **QUALITY ASSURANCE**

A. Installer Qualifications:
   1. Company specializing in performing tile installation, with minimum of five years of documented experience.

1.07 **MOCK-UP**

A. See Section 01 4000 - Quality Requirements, for general requirements for mock-up.

B. Construct tile mock-up where directed by Architect or indicated on drawings, incorporating all components specified for the location.
   1. Minimum size of mock-up is indicated on drawings for final height and min width of 4'.
   2. Approved mock-up may remain as part of the Work.

1.08 **DELIVERY, STORAGE, AND HANDLING**

A. Protect adhesives from freezing or overheating in accordance with manufacturer's instructions.

1.09 **FIELD CONDITIONS**

A. Do not install solvent-based products in an unventilated environment.

B. Maintain ambient and substrate temperature above 50 degrees F and below 100 degrees F during installation and curing of setting materials.

PART 2 PRODUCTS

2.01 **TILE**

A. Refer to Interior Standards Specifications summary and Floor Finishes Plans.

B. Glazed Wall Tile: ANSI A137.1, standard grade.
   1. Size: As indicated.
   2. Surface Finish: as indicated on drawings.
   3. Color(s): Verify color selection with district and Architect.
   4. Products:
      a. Dal-Tile Corporation; Linear: www.daltile.com/#sle.
      b. Substitutions: Not permitted.

2.02 **TRIM AND ACCESSORIES**

A. Non-Ceramic Trim: Satin brass anodized extruded aluminum, style and dimensions to suit application, for setting using tile mortar or adhesive.
   1. Applications:
      a. Open edges of wall tile.
         1) Product: Schluter-Systems; Jolly: www.schluter.com.

2.03 **SETTING MATERIALS**

A. Epoxy Adhesive and Mortar Bond Coat: ANSI A118.3.
   1. Applications: Thinset toilet and shower room walls.
   2. Products:
      a. LATICRETE International, Inc; LATICRETE LATAPOXY 300 Adhesive: www.laticrete.com/#sle.
      b. Substitutions: See Section 01 6000 - Product Requirements.

2.04 **GROUTS**

A. Provide setting and grout materials from same manufacturer.

B. Epoxy Grout: ANSI A118.3 chemical resistant and water-cleanable epoxy grout.
   1. Applications: Toilet room and shower room walls.
   2. Color(s): As selected by Architect from manufacturer's full line.
   3. Products:
      a. ARDEX Engineered Cements; ARDEX WA: www.ardexamericas.com/#sle.
      b. LATICRETE International, Inc; LATICRETE SPECTRALOCK PRO Premium Grout: www.laticrete.com/#sle.
      c. Substitutions: See Section 01 6000 - Product Requirements.

2.05 **MAINTENANCE MATERIALS**

A. Grout Sealer: Liquid-applied, moisture and stain protection for existing or new Portland cement grout.
   1. Composition: Water-based colorless silicone.

2.06 **ACCESSORY MATERIALS**

A. Waterproofing Membrane at Showers and Tiled Tubs: Specifically designed for bonding to cementitious substrate under thick mortar bed or thin-set tile; complying with ANSI A118.10.
   1. Mortar Bonded Sheet Type:
      a. Material: Chlorinated polyethylene sheet membrane with polyester fabric laminated to both sides, 30 mils, thick, minimum.
      b. Products:
         1) LATICRETE International, Inc; LATICRETE HYDRO BAN Sheet Membrane: www.laticrete.com/#sle.
         2) Substitutions: See Section 01 6000 - Product Requirements.

B. Backer Board: See Section 09 2116 - Gypsum Board Assemblies.

PART 3 EXECUTION

3.01 **EXAMINATION**

A. Verify that wall surfaces are smooth and flat within the tolerances specified for that type of work, are dust-free, and are ready to receive tile.
   1. Tolerance for Large Format Tile: 1/8 inch in 10 feet in accordance with ANSI A108.

3.02 **PREPARATION**

A. Protect surrounding work from damage.

B. Vacuum clean surfaces and damp clean.

C. Seal substrate surface cracks with filler. Level existing substrate surfaces to acceptable flatness tolerances.

D. Install backer board in accordance with ANSI A108.11 and board manufacturer's instructions. Tape joints and corners, cover with skim coat of setting material to a feather edge.

3.03 **INSTALLATION - GENERAL**

A. Install tile and grout in accordance with applicable requirements of ANSI A108.1a through ANSI A108.19 , manufacturer's instructions, and TCNA (HB) recommendations.
   1. 'Dotting' is not permitted.

B. Lay tile to pattern indicated. Do not interrupt tile pattern through openings.

C. Cut and fit tile to penetrations through tile, leaving sealant joint space. Form corners neatly. Align wall joints.

D. Place tile joints uniform in width, subject to variance in tolerance allowed in tile size. Make grout joints without voids, cracks, excess mortar or excess grout, or too little grout.
   1. Joint Size: 1/16 inch typical; 1/8 inch for large format tiles.

E. Form internal angles square and external angles bullnosed.

F. Install non-ceramic trim in accordance with manufacturer's instructions.

G. Sound tile after setting. Replace hollow sounding units.

H. Keep control and expansion joints free of mortar, grout, and adhesive.

I. Prior to grouting, allow installation to completely cure; minimum of 48 hours.

J. Grout tile joints unless otherwise indicated. Use standard grout unless otherwise indicated.

K. At changes in plane and tile-to-tile control joints, use tile sealant instead of grout, with either bond breaker tape or backer rod as appropriate to prevent three-sided bonding.

3.04 **INSTALLATION - WALL TILE**

A. Over cementitious backer units on studs, install in accordance with TCNA (HB) Method W244using membrane at locker rooms, toilet rooms, and shower rooms.

3.05 **CLEANING**

A. Clean tile and grout surfaces.

3.06 **SCHEDULE**

A. Manufactuer: Daltile

B. Collection: Linear

END OF SECTION

SECTION 09 6500
RESILIENT FLOORING

PART 1 GENERAL

1.01 SECTION INCLUDES

A. Resilient sheet flooring.

B. Resilient tile flooring.

C. Resilient base.

D. Installation accessories.

1.02 RELATED REQUIREMENTS

A. Section 03 3000 - Cast-in-Place Concrete: Restrictions on curing compounds for concrete slabs and floors to receive adhesive-applied resilient flooring.

B. Section 26 0526 - Grounding and Bonding for Electrical Systems: Grounding and bonding of static control flooring to building grounding system.

1.03 REFERENCE STANDARDS

A. ASTM F1303 - Standard Specification for Sheet Vinyl Floor Covering with Backing; 2004 (Reapproved 2014).

B. ASTM F1861 - Standard Specification for Resilient Wall Base; 2016.

C. ASTM F2195 - Standard Specification for Linoleum Floor Tile; 2018.

D. RFCI (RWP) - Recommended Work Practices for Removal of Resilient Floor Coverings; 2011.

1.04 SUBMITTALS

A. See Section 01 3000 - Administrative Requirements, for submittal procedures.

B. Product Data: Provide data on specified products, describing physical and performance characteristics; including sizes, patterns and colors available; and installation instructions.

C. Verification Samples: Submit two samples, 4 by 4 inch in size illustrating color and pattern for each resilient flooring product specified.

D. Concrete Subfloor Test Report: Submit a copy of the moisture and alkalinity (pH) test reports.

E. Certification: Prior to installation of flooring, submit written certification by flooring manufacturer and adhesive manufacturer that condition of subfloor is acceptable.

F. Maintenance Data: Include maintenance procedures, recommended maintenance materials, and suggested schedule for cleaning, stripping, and re-waxing.

G. Maintenance Materials: Furnish the following for Owner's use in maintenance of project.
   1. See Section 01 6000 - Product Requirements, for additional provisions.
   2. Extra Flooring Tile Material: One carton of each type and color.
   3. Extra Flooring Sheet Material: 80 square feet of each type and color.
   4. Extra Wall Base: One carton of each type and color.

1.05 QUALITY ASSURANCE

A. Installer Qualifications: Company specializing in installing specified flooring with minimum three years documented experience.

1.06 MOCK-UP

A. See Section 01 4000 - Quality Requirements, for general requirements for mock-up.

B. Construct tile mock-up where directed by Architect or indicated on drawings, incorporating all components specified for the location.
   1. Minimum size of mock-up is indicated on drawings or as directed by Architect.
   2. Minimum size to be 6' by 6' minmum and include a seam condition.
   3. Approved mock-up may remain as part of the Work.

1.07 **DELIVERY, STORAGE, AND HANDLING**

A. Upon receipt, immediately remove any shrink-wrap and check materials for damage and the correct style, color, quantity and run numbers.

B. Store all materials off of the floor in an acclimatized, weather-tight space.

C. Maintain temperature in storage area between 55 degrees F and 90 degrees F.

D. Protect roll materials from damage by storing on end.

E. Do not double stack pallets.

1.08 **FIELD CONDITIONS**

A. Store materials for not less than 48 hours prior to installation in area of installation at a temperature of 70 degrees F to achieve temperature stability. Thereafter, maintain conditions above 55 degrees F.

PART 2 PRODUCTS

2.01 **SHEET FLOORING**

A. Vinyl Sheet Flooring: Color and pattern throughout wear layer thickness, with backing.
   1. Manufacturers:
      a. Patcraft: www.patcraft.com.
      b. Substitutions: See Section 01 6000 - Product Requirements.
   2. Minimum Requirements: Comply with ASTM F1303, Type II, with Class A fibrous backing.
   3. Wear Layer Thickness: 0.050 inch minimum.
   4. Total Thickness: 0.079 inch minimum.
   5. Sheet Width: 78 inch minimum.
   6. Color: Verify color with district and Architect.

2.02 **TILE FLOORING**

A. Linoleum Tile: Homogeneous wear layer bonded to backing, with color and pattern through wear layer thickness.
   1. Manufacturers:
      a. Forbo Flooring, Inc: www.forboflooringna.com/#sle.
      b. Substitutions: See Section 01 6000 - Product Requirements.
   2. Minimum Requirements: Comply with ASTM F2195, Type corresponding to type specified.
   3. Backing: Synthetic fabric.
   4. Thickness: 0.100 inch, minimum, excluding backing.
   5. Color: Verify color with district and Architect.

2.03 **RESILIENT BASE**

A. Resilient Base: ASTM F1861, Type TS rubber, vulcanized thermoset; Straight and Cove.
   1. Manufacturers:
      a. Tarket: www.commercial.tarkett.com.
      b. Substitutions: See Section 01 6000 - Product Requirements.
   2. Height: 6 inch.
   3. Thickness: 0.125 inch.
   4. Finish: Satin.
   5. Color: Verify color with district and Architect.

2.04 **ACCESSORIES**

A. Subfloor Filler: White premix latex; type recommended by adhesive material manufacturer.

B. Primers, Adhesives, and Seam Sealer: Waterproof; types recommended by flooring manufacturer.

C. Sealer and Wax: Types recommended by flooring manufacturer.

PART 3 EXECUTION

3.01 EXAMINATION

A. Verify that surfaces are flat to tolerances acceptable to flooring manufacturer, free of cracks that might telegraph through flooring, clean, dry, and free of curing compounds, surface hardeners, and other chemicals that might interfere with bonding of flooring to substrate.

B. Verify that wall surfaces are smooth and flat within the tolerances specified for that type of work, are dust-free, and are ready to receive resilient base.

C. Cementitious Subfloor Surfaces: Verify that substrates are ready for resilient flooring installation by testing for moisture and alkalinity (pH).
   1. Obtain instructions if test results are not within limits recommended by resilient flooring manufacturer and adhesive materials manufacturer.

D. Verify that required floor-mounted utilities are in correct location.

3.02 PREPARATION

A. Remove existing resilient flooring and flooring adhesives; follow the recommendations of RFCI (RWP).

B. Prepare floor substrates as recommended by flooring and adhesive manufacturers.

C. Remove subfloor ridges and bumps. Fill minor low spots, cracks, joints, holes, and other defects with subfloor filler to achieve smooth, flat, hard surface.

D. Prohibit traffic until filler is fully cured.

E. Clean substrate.

3.03 INSTALLATION - GENERAL

A. Starting installation constitutes acceptance of subfloor conditions.

B. Install in accordance with manufacturer's written instructions.

C. Adhesive-Applied Installation:
   1. Place copper grounding strip in conductive adhesive and apply additional adhesive to top side of strip before installing static control flooring. Allow strip to extend beyond flooring in accordance with static control flooring manufacturer's instructions. Refer to Section 26 0526 for grounding and bonding to building grounding system.
   2. Fit joints and butt seams tightly.
   3. Set flooring in place, press with heavy roller to attain full adhesion.

D. Where type of floor finish, pattern, or color are different on opposite sides of door, terminate flooring under centerline of door.

E. Install edge strips at unprotected or exposed edges, where flooring terminates, and where indicated.
   1. Metal Strips: Attach to substrate before installation of flooring using stainless steel screws.

F. Scribe flooring to walls, columns, cabinets, floor outlets, and other appurtenances to produce tight joints.

3.04 INSTALLATION - SHEET FLOORING

A. Lay flooring with joints and seams parallel to longer room dimensions, to produce minimum number of seams. Lay out seams to avoid widths less than 1/3 of roll width; match patterns at seams.

B. Seams are prohibited in toilet rooms.

C. Cut sheet at seams in accordance with manufacturer's instructions.

D. Seal seams by heat welding where indicated.

3.05 INSTALLATION - TILE FLOORING

A. Mix tile from container to ensure shade variations are consistent when tile is placed, unless otherwise indicated in manufacturer's installation instructions.

B. Lay flooring with joints and seams parallel to building lines to produce symmetrical pattern.

3.06 **INSTALLATION - RESILIENT BASE**

A. Fit joints tightly and make vertical. Maintain minimum dimension of 18 inches between joints.

B. Miter internal corners. At external corners, use premolded units. At exposed ends, use premolded units.

C. Install base on solid backing. Bond tightly to wall and floor surfaces.

D. Scribe and fit to door frames and other interruptions.

3.07 **CLEANING**

A. Remove excess adhesive from floor, base, and wall surfaces without damage.

B. Clean in accordance with manufacturer's written instructions.

3.08 **PROTECTION**

A. Prohibit traffic on resilient flooring for 48 hours after installation.

END OF SECTION

SECTION 09 6700
FLUID-APPLIED FLOORING

PART 1 GENERAL

1.01 SECTION INCLUDES

A. Fluid-applied flooring and base.

1.02 RELATED REQUIREMENTS

A. Section 033000 - Cast-in-Place Concrete.

1.03 REFERENCE STANDARDS

A. ASTM F710 - Standard Practice for Preparing Concrete Floors to Receive Resilient Flooring; 2019.

B. ICRI 310.2R - Selecting and Specifying Concrete Surface Preparation for Sealers, Coatings, Polymer Overlays, and Concrete Repair; 2013.

1.04 ADMINISTRATIVE REQUIREMENTS

A. Coordinate with affected mechanical and electrical work associated with penetrations.

B. Preinstallation Meeting: Convene one week before starting work of this section.
   1. Attendees:
      a. Architect.
      b. Contractor.
      c. Owner.
      d. Installer.
      e. System manufacturer's field representative.
   2. Meeting Agenda: Provide agenda to participants prior to meeting in preparation for discussions on the following:
      a. Necessary preparatory work.
      b. Protection before, during, and after system installation.
      c. Installation of new system.
      d. Temporary and daily terminations.
      e. Transitions and connection to and with other work.
      f. Inspections and testing of installed systems.

1.05 SUBMITTALS

A. See Section 01 3000 - Administrative Requirements, for submittal procedures.

B. Product Data: Provide data on specified products, describing physical and performance characteristics; sizes, patterns and colors available.

C. Samples: Submit two samples, 3 by 3 inch in size illustrating color and pattern for each floor material for each color specified.

D. Maintenance Data: Include maintenance procedures, recommended maintenance materials, procedures for stain removal, repairing surface, and suggested schedule for cleaning.

E. Maintenance Materials: Furnish the following for Owner's use in maintenance of project.
   1. See Section 01 6000 - Product Requirements, for additional provisions.
   2. Extra Top Coat Materials: 2 gallons.

1.06 QUALITY ASSURANCE

A. Manufacturer Qualifications: Company specializing in manufacturing products specified in this section with minimum three years documented experience.

B. Applicator Qualifications: Company specializing in performing the work of this section.
   1. Approved by manufacturer.

1.07 MOCK-UP

A. Construct mock-up(s) of fluid applied flooring to serve as basis for evaluation of texture and workmanship.

1. Number of Mock-Ups to be Prepared: One.
2. Use same materials and methods for use in the work.
3. Locate where directed by Architect.
4. Minimum Size: 96 inches by 96 inches and include one (minimum) inside corner condition.

B. See Section 01 4000 - Quality Requirements for additional requirements.

C. Obtain approval of mock-up by Architect before proceeding with work.

D. Approved mock-up may remain as part of the Work.

1.08 **DELIVERY, STORAGE, AND HANDLING**

A. Store resin materials in a dry, secure area.

B. Store materials for three days prior to installation in area of installation to achieve temperature stability.

1.09 **FIELD CONDITIONS**

A. Maintain minimum temperature in storage area of 55 degrees F.

B. Store materials in area of installation for minimum period of 24 hours prior to installation.

C. Maintain ambient temperature required by manufacturer 72 hours prior to, during, and 24 hours after installation of materials.

PART 2 PRODUCTS

2.01 **MANUFACTURERS**

A. Fluid-Applied Flooring:
1. Dur-A-Flex, Inc., Poly-Crete MBD: www.dur-a-flex.com.
2. Substitutions: See Section 01 6000 - Product Requirements.

2.02 **FLUID-APPLIED FLOORING SYSTEMS**

A. Fluid-Applied Flooring: Polyurethane cement slurry base coat(s) with broadcast aggregate.
1. Aggregate: Quartz granules.
2. System Thickness: 1/4 inch, nominal, when dry.
3. Texture: Slip resistant.
4. Color: Verify with district and architect.

2.03 **ACCESSORIES**

A. Base Caps: Extruded anodized aluminum with projecting base of 1/8 inch; clear anodized color.

B. Cant Strips: Molded material compatible with flooring.

C. Subfloor Filler: Type recommended by fluid-applied flooring manufacturer.

D. Primer: Type recommended by fluid-applied flooring manufacturer.

PART 3 EXECUTION

3.01 **EXAMINATION**

A. Verify that subfloor surfaces are smooth and flat within the tolerances specified for that type of work and are ready to receive flooring.

B. Verify that wall surfaces are smooth and flat within the tolerances specified for that type of work, are dust-free, and are ready to receive flooring.

C. Verify that subfloor surfaces are dust-free and free of substances that could impair bonding of materials to subfloor surfaces.

D. Cementitious Subfloor Surfaces: Verify that substrates are ready for fluid-applied flooring installation by testing for moisture and alkalinity (pH).
1. Obtain instructions if test results are not within limits recommended by fluid-applied flooring manufacturer.

E. Verify that required floor-mounted utilities are in correct location.

3.02 **PREPARATION**

A. Remove subfloor ridges and bumps. Fill low spots, cracks, joints, holes, and other defects with subfloor filler.

B. Apply, trowel, and float filler to achieve smooth, flat, hard surface. Grind irregularities above the surface level. Prohibit traffic until filler is cured.

C. Vacuum clean substrate.

D. Apply primer to surfaces required by flooring manufacturer.

3.03 **INSTALLATION - ACCESSORIES**

A. Install cant strips at base of walls where flooring is to be extended up wall as base.

B. Install terminating cap strip at top of base; attach securely to wall substrate.

3.04 **INSTALLATION - FLOORING**

A. Apply in accordance with manufacturer's instructions.

B. Apply each coat to minimum thickness indicated.

C. Finish to smooth level surface.

D. Cove at vertical surfaces.

3.05 **PROTECTION**

A. Prohibit traffic on floor finish for 48 hours after installation.

B. Barricade area to protect flooring until fully cured.

END OF SECTION

SECTION 09 9113
EXTERIOR PAINTING

PART 1 GENERAL

1.01 SECTION INCLUDES

A. Surface preparation.

B. Field application of paints.

C. Scope: Finish exterior surfaces exposed to view, unless fully factory-finished.

D. Do Not Paint or Finish the Following Items:
   1. Items factory-finished unless otherwise indicated; materials and products having factory-applied primers are not considered factory finished.
   2. Items indicated to receive other finishes.
   3. Items indicated to remain unfinished.
   4. Fire rating labels, equipment serial number and capacity labels, and operating parts of equipment.
   5. Floors, unless specifically indicated.
   6. Glass.
   7. Concealed pipes, ducts, and conduits.

1.02 RELATED REQUIREMENTS

A. Section 09 9123 - Interior Painting.

1.03 DEFINITIONS

A. Comply with ASTM D16 for interpretation of terms used in this section.

1.04 REFERENCE STANDARDS

A. ASTM D16 - Standard Terminology for Paint, Related Coatings, Materials, and Applications 2016.

B. ASTM D4442 - Standard Test Methods for Direct Moisture Content Measurement of Wood and Wood-Based Materials 2020.

C. MPI (APSM) - Master Painters Institute Architectural Painting Specification Manual Current Edition.

1.05 SUBMITTALS

A. See Section 01 3000 - Administrative Requirements, for submittal procedures.

B. Product Data: Provide complete list of products to be used, with the following information for each:
   1. Manufacturer's name, product name and/or catalog number, and general product category (e.g. "alkyd enamel").
   2. MPI product number (e.g. MPI #47).
   3. Cross-reference to specified paint system(s) product is to be used in; include description of each system.

C. Samples: Submit three paper "draw down" samples, 8-1/2 by 11 inches (216 by 279 mm) in size, illustrating range of colors available for each finishing product specified.
   1. Where sheen is specified, submit samples in only that sheen.

D. Maintenance Materials: Furnish the following for Owner's use in maintenance of project.
   1. See Section 01 6000 - Product Requirements, for additional provisions.
   2. Extra Paint and Finish Materials: 1 gallon (4 L) of each color; from the same product run, store where directed.
   3. Label each container with color in addition to the manufacturer's label.

1.06 FIELD CONDITIONS

A. Do not apply materials when surface and ambient temperatures are outside the temperature ranges required by the paint product manufacturer.

B. Follow manufacturer's recommended procedures for producing best results, including testing of substrates, moisture in substrates, and humidity and temperature limitations.

C. Do not apply exterior paint and finishes during rain or snow, or when relative humidity is outside the humidity ranges required by the paint product manufacturer.

D. Minimum Application Temperatures for Latex Paints: 50 degrees F (10 degrees C) for exterior; unless required otherwise by manufacturer's instructions.

E. Provide lighting level of 80 ft candles (860 lx) measured mid-height at substrate surface.

PART 2 PRODUCTS

2.01 MANUFACTURERS

A. Paints:
   1. PPG Paints: www.ppgpaints.com/#sle.
   2. Sherwin-Williams Company: www.sherwin-williams.com/#sle.

2.02 PAINTS AND FINISHES - GENERAL

A. Paints and Finishes: Ready mixed, unless required to be a field-catalyzed paint.
   1. Provide paints and finishes of a soft paste consistency, capable of being readily and uniformly dispersed to a homogeneous coating, with good flow and brushing properties, and capable of drying or curing free of streaks or sags.
   2. Supply each paint material in quantity required to complete entire project's work from a single production run.
   3. Do not reduce, thin, or dilute paint or finishes or add materials unless such procedure is specifically described in manufacturer's product instructions.

2.03 PAINT SYSTEMS - EXTERIOR

A. Paint E-OP - Exterior Surfaces to be Painted, Unless Otherwise Indicated: Including primed wood and primed metal.
   1. Two top coats and one coat primer.

2.04 ACCESSORY MATERIALS

A. Accessory Materials: Provide primers, sealers, cleaning agents, cleaning cloths, sanding materials, and clean-up materials as required for final completion of painted surfaces.

B. Patching Material: Latex filler.

C. Fastener Head Cover Material: Latex filler.

PART 3 EXECUTION

3.01 EXAMINATION

A. Verify that surfaces are ready to receive work as instructed by the product manufacturer.

B. Examine surfaces scheduled to be finished prior to commencement of work. Report any condition that may potentially effect proper application.

C. Test shop-applied primer for compatibility with subsequent cover materials.

D. Measure moisture content of surfaces using an electronic moisture meter. Do not apply finishes unless moisture content of surfaces are below the following maximums:
   1. Exterior Wood: 15 percent, measured in accordance with ASTM D4442.

3.02 PREPARATION

A. Clean surfaces thoroughly and correct defects prior to application.

B. Prepare surfaces using the methods recommended by the manufacturer for achieving the best result for the substrate under the project conditions.

C. Remove or mask surface appurtenances, including electrical plates, hardware, light fixture trim, escutcheons, and fittings, prior to preparing surfaces for finishing.

D. Seal surfaces that might cause bleed through or staining of topcoat.

E. Remove mildew from impervious surfaces by scrubbing with solution of tetra-sodium phosphate and bleach. Rinse with clean water and allow surface to dry.

F. Exterior Wood Surfaces to Receive Opaque Finish: Remove dust, grit, and foreign matter. Seal knots, pitch streaks, and sappy sections. Fill nail holes with tinted exterior calking compound after prime coat has been applied. Back prime concealed surfaces before installation.

G. Metal Doors to be Painted: Prime metal door top and bottom edge surfaces.

3.03 **APPLICATION**

A. Exterior Wood to Receive Opaque Finish: If final painting must be delayed more than 2 weeks after installation of woodwork, apply primer within 2 weeks and final coating within 4 weeks.

B. Apply products in accordance with manufacturer's written instructions and recommendations in "MPI Architectural Painting Specification Manual".

C. Where adjacent sealant is to be painted, do not apply finish coats until sealant is applied.

D. Do not apply finishes to surfaces that are not dry. Allow applied coats to dry before next coat is applied.

E. Apply each coat to uniform appearance.

F. Vacuum clean surfaces of loose particles. Use tack cloth to remove dust and particles just prior to applying next coat.

G. Reinstall electrical cover plates, hardware, light fixture trim, escutcheons, and fittings removed prior to finishing.

3.04 **CLEANING**

A. Collect waste material that could constitute a fire hazard, place in closed metal containers, and remove daily from site.

3.05 **PROTECTION**

A. Protect finishes until completion of project.

B. Touch-up damaged finishes after Substantial Completion.

END OF SECTION

SECTION 09 9123
INTERIOR PAINTING

PART 1 GENERAL

1.01 SECTION INCLUDES

A. Surface preparation.

B. Field application of paints.

C. Scope: Finish interior surfaces exposed to view, unless fully factory-finished and unless otherwise indicated.

D. Do Not Paint or Finish the Following Items:
   1. Items factory-finished unless otherwise indicated; materials and products having factory-applied primers are not considered factory finished.
   2. Items indicated to receive other finishes.
   3. Items indicated to remain unfinished.
   4. Fire rating labels, equipment serial number and capacity labels, bar code labels, and operating parts of equipment.
   5. Floors, unless specifically indicated.
   6. Glass.
   7. Concealed pipes, ducts, and conduits.

1.02 RELATED REQUIREMENTS

A. Section 01 6116 - Volatile Organic Compound (VOC) Content Restrictions.

B. Section 09 9113 - Exterior Painting.

1.03 DEFINITIONS

A. Comply with ASTM D16 for interpretation of terms used in this section.

1.04 REFERENCE STANDARDS

A. 40 CFR 59, Subpart D - National Volatile Organic Compound Emission Standards for

B. Architectural Coatings; U.S. Environmental Protection Agency; current edition.

C. ASTM D16 - Standard Terminology for Paint, Related Coatings, Materials, and Applications 2016.

D. ASTM D4442 - Standard Test Methods for Direct Moisture Content Measurement of Wood and Wood-Based Materials 2020.

E. MPI (APL) - Master Painters Institute Approved Products List; Master Painters and Decorators Association Current Edition.

F. MPI (APSM) - Master Painters Institute Architectural Painting Specification Manual Current Edition.

G. SCAQMD 1113 - Architectural Coatings 1977 (Amended 2016).

H. SSPC-SP 1 - Solvent Cleaning 2015, with Editorial Revision (2016).

1.05 SUBMITTALS

A. See Section 01 3000 - Administrative Requirements, for submittal procedures.

B. Product Data: Provide complete list of products to be used, with the following information for each:
   1. Manufacturer's name, product name and/or catalog number, and general product category (e.g. "alkyd enamel").
   2. MPI product number (e.g. MPI #47).
   3. Cross-reference to specified paint system(s) product is to be used in; include description of each system.

C. Samples: Submit three paper "draw down" samples, 8-1/2 by 11 inches (216 by 279 mm) in size, illustrating range of colors available for each finishing product specified.
   1. Where sheen is specified, submit samples in only that sheen.

D. Maintenance Materials: Furnish the following for Owner's use in maintenance of project.

1. See Section 01 6000 - Product Requirements, for additional provisions.
2. Extra Paint and Finish Materials: 1 gallon (4 L) of each color; from the same product run, store where directed.
3. Label each container with color in addition to the manufacturer's label.

1.06 **FIELD CONDITIONS**

A. Do not apply materials when surface and ambient temperatures are outside the temperature ranges required by the paint product manufacturer.

B. Follow manufacturer's recommended procedures for producing best results, including testing of substrates, moisture in substrates, and humidity and temperature limitations.

C. Provide lighting level of 80 ft candles (860 lx) measured mid-height at substrate surface.

PART 2 PRODUCTS

2.01 **MANUFACTURERS**

A. Provide paints and finishes from the same manufacturer to the greatest extent possible.

B. Paints: Miller Paint, no substitutions permitted, all paints to be semi-gloss.

C. Primer Sealers: Same manufacturer as top coats.

2.02 **PAINTS AND FINISHES - GENERAL**

A. Paints and Finishes: Ready mixed, unless intended to be a field-catalyzed paint.
1. Where MPI paint numbers are specified, provide products listed in Master Painters Institute Approved Product List, current edition available at www.paintinfo.com, for specified MPI categories, except as otherwise indicated.
2. Provide paints and finishes of a soft paste consistency, capable of being readily and uniformly dispersed to a homogeneous coating, with good flow and brushing properties, and capable of drying or curing free of streaks or sags.
3. Provide materials that are compatible with one another and the substrates indicated under conditions of service and application, as demonstrated by manufacturer based on testing and field experience.
4. Supply each paint material in quantity required to complete entire project's work from a single production run.
5. Do not reduce, thin, or dilute paint or finishes or add materials unless such procedure is specifically described in manufacturer's product instructions.

B. Volatile Organic Compound (VOC) Content:
1. Provide paints and finishes that comply with the most stringent requirements specified in the following:
   a. 40 CFR 59, Subpart D--National Volatile Organic Compound Emission Standards for Architectural Coatings.
   b. SCAQMD 1113 Rule.
2. Determination of VOC Content: Testing and calculation in accordance with 40 CFR 59, Subpart D (EPA Method 24), exclusive of colorants added to a tint base and water added at project site; or other method acceptable to authorities having jurisdiction.

2.03 **PAINT SYSTEMS - INTERIOR**

A. Paint I-OP - Interior Surfaces to be Painted, Unless Otherwise Indicated: Including gypsum board, wood, and shop primed steel.
1. Two top coats and one coat primer.
2. Top Coat(s): High Performance Architectural Interior Latex; MPI #138, 139, 140, or 141.
3. Primer: As recommended by top coat manufacturer for specific substrate.

B. Paint I-OP-MD-DT - Medium Duty Door/Trim: For surfaces subject to frequent contact by occupants, including metals and wood:
1. Two top coats and one coat primer.
2. Top Coat(s): Interior Epoxy-Modified Latex; MPI #115 or 215.
3. Primer: As recommended by top coat manufacturer for specific substrate.

2.04 **PRIMERS**

A. Primers: Provide the following unless other primer is required or recommended by manufacturer of top coats.

2.05 **ACCESSORY MATERIALS**

A. Accessory Materials: Provide primers, sealers, cleaning agents, cleaning cloths, sanding materials, and clean-up materials as required for final completion of painted surfaces.

B. Patching Material: Latex filler.

C. Fastener Head Cover Material: Latex filler.

PART 3 EXECUTION

3.01 **EXAMINATION**

A. Do not begin application of paints and finishes until substrates have been properly prepared.

B. Verify that surfaces are ready to receive work as instructed by the product manufacturer.

C. Examine surfaces scheduled to be finished prior to commencement of work. Report any condition that may potentially effect proper application.

D. Test shop-applied primer for compatibility with subsequent cover materials.

E. Measure moisture content of surfaces using an electronic moisture meter. Do not apply finishes unless moisture content of surfaces are below the following maximums:
   1. Gypsum Wallboard: 12 percent.
   2. Interior Wood: 15 percent, measured in accordance with ASTM D4442.

3.02 **PREPARATION**

A. Clean surfaces thoroughly and correct defects prior to application.

B. Prepare surfaces using the methods recommended by the manufacturer for achieving the best result for the substrate under the project conditions.

C. Remove or mask surface appurtenances, including electrical plates, hardware, light fixture trim, escutcheons, and fittings, prior to preparing surfaces or finishing.

D. Seal surfaces that might cause bleed through or staining of topcoat.

E. Gypsum Board: Fill minor defects with filler compound. Spot prime defects after repair.

F. Wood Surfaces to Receive Opaque Finish: Wipe off dust and grit prior to priming. Seal knots, pitch streaks, and sappy sections with sealer. Fill nail holes and cracks after primer has dried; sand between coats. Back prime concealed surfaces before installation.

3.03 **APPLICATION**

A. Remove unfinished louvers, grilles, covers, and access panels on mechanical and electrical components and paint separately.

B. Apply products in accordance with manufacturer's written instructions and recommendations in "MPI Architectural Painting Specification Manual".

C. Where adjacent sealant is to be painted, do not apply finish coats until sealant is applied.

D. Do not apply finishes to surfaces that are not dry. Allow applied coats to dry before next coat is applied.

E. Apply each coat to uniform appearance in thicknesses specified by manufacturer.

F. Sand wood and metal surfaces lightly between coats to achieve required finish.

G. Vacuum clean surfaces of loose particles. Use tack cloth to remove dust and particles just prior to applying next coat.

H. Reinstall electrical cover plates, hardware, light fixture trim, escutcheons, and fittings removed prior to finishing.

3.04 **CLEANING**

A. Collect waste material that could constitute a fire hazard, place in closed metal containers, and remove daily from site.

3.05 **PROTECTION**

END OF SECTION

SECTION 10 1400
SIGNAGE

PART 1 GENERAL

1.01 SECTION INCLUDES

A. Room and door signs.

1.02 RELATED REQUIREMENTS

A. Section 26 5100 - Interior Lighting: Exit signs required by code.

1.03 REFERENCE STANDARDS

A. 36 CFR 1191 - Americans with Disabilities Act (ADA) Accessibility Guidelines for Buildings and Facilities; Architectural Barriers Act (ABA) Accessibility Guidelines; current edition.

B. ADA Standards - Americans with Disabilities Act (ADA) Standards for Accessible Design; 2010.

C. ICC A117.1 - Accessible and Usable Buildings and Facilities; 2017.

1.04 SUBMITTALS

A. See Section 01 3000 - Administrative Requirements, for submittal procedures.

B. Product Data: Manufacturer's printed product literature for each type of sign, indicating sign styles, font, foreground and background colors, locations, overall dimensions of each sign.

C. Signage Schedule: Provide information sufficient to completely define each sign for fabrication, including room number, room name, other text to be applied, sign and letter sizes, fonts, and colors.
   1. Room numbers will differ from those on the drawings. Include drawing room number on schedule as a reference.
   2. Room names, numbers, and graphics are to be determined by the Owner prior to fabrication. Request this information from Owner through Architect at least 2 months prior to start of fabrication; upon request, submit preliminary schedule.
   3. Submit for approval by Owner through Architect prior to fabrication.

D. Verification Samples: Submit samples showing colors specified.

E. Manufacturer's Installation Instructions: Include installation templates and attachment devices.

F. Manufacturer's Qualification Statement.

1.05 QUALITY ASSURANCE

A. Manufacturer Qualifications: Company specializing in manufacturing the products specified in this section with minimum three years of documented experience.

1.06 DELIVERY, STORAGE, AND HANDLING

A. Package signs as required to prevent damage before installation.

B. Store tape adhesive at normal room temperature.

1.07 FIELD CONDITIONS

A. Do not install tape adhesive when ambient temperature is lower than recommended by manufacturer.

B. Maintain this minimum temperature during and after installation of signs.

PART 2 PRODUCTS

2.01 MANUFACTURERS

A. Manufacturers:
   1. ASI Sign Systems Inc: www.asisignage.com
   2. Center Pointe Signs: www.centerpointesigns.com
   3. Contemporary Visions: www.contemporaryvsigns.com

4. Meyer Architectural Signs & Graphics: www.meyerasg.com
5. Substitutions: See Section 01 6000 - Product Requirements.

B. Requirements:
1. Tactile characters shall be raised the required 1/32 inch from sign face. Glue-on letters or etched backgrounds are not acceptable.
2. All text shall be accompanied by Grade 2 Braille. Braille shall be separated 1/2 inch from the corresponding raised characters or symbols. Grade 2 Braille translations to be provided by signage manufacturer.
3. All letters, numbers and/or symbols shall contrast with their background, either light characters on a dark background or dark characters on a light background. Characters and background shall have a non-glare finish.
4. Plaque material shall be Special Purpose SP 125 decorative thermosetting high-pressure laminate. Material to be 1/8 inch thick laminate with a melamine resin surface and a phenolic resin core which provides resistance to abrasion, stains, alcohol, solvents, boiling water, and heat. The material shall be NEMA rated and have flammability and smoke values that meet the standards for flammability of interior materials.
5. Background color as selected by Architect from manufacturer's actual color samples.
6. Unless otherwise indicated, letterform shall be upper case letters and numbers from Manufacturer's standard range to be selected by Architect.
   a. Size of letters and numbers shall be as follows:
      1) Lettering for room ID signs, or messages, shall be 3/4 inch or as noted.
      2) Symbol size shall be 4-inches.
      3) Standard Grade 2 Braille shall be 1/2 inch below copy.
      4) Corners: 1/2 inch radius

2.02 INTERIOR ARCHITECTURAL SIGNAGE

A. Accessibility Compliance: Signs are required to comply with ADA Standards and ICC A117.1, unless otherwise indicated; in the event of conflicting requirements, comply with the most comprehensive and specific requirements.

B. [Type A] Gender Neutral Restroom Signs:
1. Provide one new sign at each door opening and as indicated in drawings.
2. Size: 8" x 8"
3. Room Name
4. International symbol for "men" and "women"

C. [Type B] Staff Restroom Signs:
1. Provide one new sign at each door opening and as indicated in drawings.
2. Size: 8" x 8"
3. Room Name
4. International symbols for "men" and "women"

D. [Type C] Maximum Occupancy Signs:
1. Size: 10" x 10" minimum.
2. "Maximum Occupancy XXX".
   a. (Refer to fire life safety plans for occupant count)
3. Locations:
   a. AMS: Mid Gym, Media Center
   b. JMOS: Multi-Purpose Room

2.03 ACCESSORIES

A. Concealed Screws: Stainless steel, galvanized steel, chrome plated, or other non-corroding metal.

B. Tape Adhesive: Mount using vinyl tape and silastic adhesive, glass installations to use double-sided adhesive tape with matching back plaque.

PART 3 EXECUTION

3.01 **EXAMINATION**

A. Verify that substrate surfaces are ready to receive work.

3.02 **INSTALLATION**

A. Install in accordance with manufacturer's instructions.

B. Install neatly, with horizontal edges level.

C. Verify signage location with Architect prior to installation for every sign Type indicated herein.

D. Locate signs and mount at heights indicated on drawings and in accordance with ADA Standards and ICC A117.1.

E. Mounting height: 60-inches from floor to center of sign (unless otherwise required).

F. Mounting location: latch side of door, except for signs identified to be located other than next to door.

G. Mount exterior signs using mechanical means, with stainless steel tamper proof screws.

H. Protect from damage until Substantial Completion; repair or replace damaged items.

END OF SECTION

SECTION 10 2600
WALL AND DOOR PROTECTION

PART 1 GENERAL

1.01 SECTION INCLUDES

A. Corner and Endwall guards.

1.02 RELATED REQUIREMENTS

A. Section 05 5000 - Metal Fabrications: Corner guards fabricated from rolled metal sections or bent plate.

1.03 SUBMITTALS

A. See Section 01 3000 - Administrative Requirements, for submittal procedures.

B. Product Data: Indicate physical dimensions, features, wall mounting brackets with mounted measurements, and anchorage details.

C. Shop Drawings: Include plans, elevation, sections, and attachment details.

1.04 DELIVERY, STORAGE, AND HANDLING

A. Deliver wall and door protection items in original, undamaged protective packaging. Label items to designate installation locations.

PART 2 PRODUCTS

2.01 MANUFACTURERS

A. Corner Guards:
   1. Construction Specialties, Inc: www.c-sgroup.com/#sle.
   2. Inpro: www.inprocorp.com/#sle.
   3. Substitutions: See Section 01 6000 - Product Requirements.

2.02 PRODUCT TYPES

A. Corner Guards - Flush Mounted:
   1. Material: Type 304 stainless steel, No. 4 finish, 16 gage, 0.06 inch thick.
   2. Width of Wings: 2 inches.
   3. End wall: provide full C-shape for endwall conditon of 8 inch thck or less.
   4. Corner: Square.
   5. Length: One piece.

B. Adhesives and Primers: As recommended by manufacturer.

2.03 FABRICATION

A. Fabricate components with tight joints, corners and seams.

B. Pre-drill holes for attachment.

PART 3 EXECUTION

3.01 EXAMINATION

A. Verify that rough openings, concealed blocking, and anchors are correctly sized and located.

B. Verify that field measurements are as indicated on drawings.

C. Verify that substrate surfaces for adhered items are clean and smooth.

3.02 INSTALLATION

A. Install components in accordance with manufacturer's instructions, level and plumb, secured rigidly in position to supporting construction.

B. Position corner guard 4 inches above finished floor to height indicated on drawings.

3.03 TOLERANCES

A. Maximum Variation From Required Height: 1/8 inch.

Maximum Variation From Level or Plane For Visible Length: 1/16 inch

3.04 **CLEANING**

A. Clean wall and door protection items of excess adhesive, dust, dirt, and other contaminants.

END OF SECTION

SECTION 10 2800
TOILET, BATH, AND LAUNDRY ACCESSORIES

PART 1 GENERAL

1.01 SECTION INCLUDES

A. Commercial toilet accessories.

B. Utility room accessories.

C. Coat hooks.

1.02 RELATED REQUIREMENTS

A. Section 08 8300 - Mirrors: Other mirrors.

B. Section 22 4000 - Plumbing Fixtures: Under-lavatory pipe and supply covers.

1.03 REFERENCE STANDARDS

A. ADA Standards - Americans with Disabilities Act (ADA) Standards for Accessible Design; 2010.

B. ASTM A269/A269M - Standard Specification for Seamless and Welded Austenitic Stainless Steel Tubing for General Service; 2015a (Reapproved 2019).

C. ASTM A666 - Standard Specification for Annealed or Cold-Worked Austenitic Stainless Steel Sheet, Strip, Plate, and Flat Bar; 2015.

D. ASTM C1036 - Standard Specification for Flat Glass; 2016.

E. ASTM C1503 - Standard Specification for Silvered Flat Glass Mirror; 2018.

F. ASTM F2285 - Standard Consumer Safety Performance Specification for Diaper Changing Tables for Commercial Use; 2004, with Editorial Revision (2016).

1.04 SUBMITTALS

A. See Section 01 3000 - Administrative Requirements, for submittal procedures.

B. Product Data: Submit data on accessories describing size, finish, details of function, and attachment methods.

PART 2 PRODUCTS

2.01 MANUFACTURERS

A. Commercial Toilet, Shower, and Bath Accessories:
   1. American Specialties, Inc: www.americanspecialties.com/#sle.
   2. Bobrick: www.bobrick.com.
   3. Bradley Corporation: www.bradleycorp.com/#sle.
   4. Seachrome: www.seachrome.com.
   5. Substitutions: Section 01 6000 - Product Requirements.

B. Under-Lavatory Pipe Supply Covers:
   1. See Division 22 - Plumbing.

2.02 MATERIALS

A. Accessories - General: Shop assembled, free of dents and scratches and packaged complete with anchors and fittings, steel anchor plates, adapters, and anchor components for installation.

B. Keys: Provide 10 keys for each accessory to Owner.

C. Stainless Steel Sheet: ASTM A666, Type 304.

D. Stainless Steel Tubing: ASTM A269/A269M, Grade TP304 or TP316.

E. Mirror Glass: Annealed float glass, ASTM C1036 Type I, Class 1, Quality Q2, with silvering, protective and physical characteristics complying with ASTM C1503.

F. Fasteners, Screws, and Bolts: Hot dip galvanized; tamper-proof; security type.

2.03 **FINISHES**

A. Stainless Steel: Satin finish, unless otherwise noted.

2.04 **COMMERCIAL TOILET ACCESSORIES**

A. Toilet Paper Dispenser: Double roll, surface mounted, for coreless type rolls.
   1. Product: Owner furnished, contractor installed.

B. Paper Towel Dispenser: Electric, roll paper type.
   1. Product: Owner furnished, contractor installed.

C. Automated Soap Dispenser: Liquid soap dispenser, wall-mounted, with stainless steel cover and window to gauge soap level.
   1. Product: Owner furnished, contractor installed.

D. Mirrors: Stainless steel framed, 1/4 inch thick annealed float glass; ASTM C1036.
   1. Annealed Float Glass: Silvering, protective and physical characteristics in compliance with ASTM C1503.
   2. Size: 24" x 36".
   3. Frame: 0.05 inchangle shapes, with mitered and welded and ground corners, and tamperproof hanging system; satin finish.
   4. Products:
      a. Bobrick B-290 2436.
      b. Substitutions: Section 01 6000 - Product Requirements.

E. Seat Cover Dispenser (TSC): Stainless steel, surface-mounted, reloading by concealed opening at base.
   1. Product: Owner furnished, Owner installed.

F. Grab Bars (GB): Stainless steel, smooth surface.
   1. Standard Duty Grab Bars:
      a. Push/Pull Point Load: 250 pound-force, minimum.
      b. Dimensions: 1-1/4 inch outside diameter, minimum 0.05 inch wall thickness, exposed flange mounting, 1-1/2 inch clearance between wall and inside of grab bar.
      c. Finish: Satin.
      d. Length and Configuration: As indicated on drawings.
      e. Products:
         1) B-6806 Series manufactured by Bobrick.

G. Sanitary Napkin Disposal Unit (SND): Stainless steel, surface-mounted, self-closing door, locking bottom panel with full-length stainless steel piano-type hinge, removable receptacle.
   1. Products:
      a. B-354 manufactured by Bobrick.

2.05 **UTILITY ROOM ACCESSORIES**

A. Mop and Broom Holder: 0.05 inch thick stainless steel, Type 304, hat-shaped channel.
   1. Hooks: Four 0.06 inch stainless steel rag hooks at shelf front.
   2. Mop/Broom Holders: Three spring-loaded rubber cam holders.
   3. Length: Manufacturer's standard length for number of holders.
   4. Products:
      a. B-239 manufactured by Bobrick.

PART 3 EXECUTION

3.01 **EXAMINATION**

A. Verify existing conditions before starting work.

B. Verify exact location of accessories for installation.

C. See Section 06 1000 for installation of blocking, reinforcing plates, and concealed anchors in walls.

3.02 **PREPARATION**

A. Deliver inserts and rough-in frames to site for timely installation.

B. Provide templates and rough-in measurements as required.

3.03 **INSTALLATION**

A. Install accessories in accordance with manufacturers' instructions in locations indicated on drawings.

B. Install plumb and level, securely and rigidly anchored to substrate.

C. Mounting Heights: As required by accessibility regulations, unless otherwise indicated.

3.04 **PROTECTION**

A. Protect installed accessories from damage due to subsequent construction operations.

END OF SECTION

SECTION 10 5129
PHENOLIC LOCKERS

PART 1 GENERAL

1.01 SECTION INCLUDES

A. Lockers of the following types:
   1. Phenolic lockers.

1.02 RELATED SECTIONS

A. Section 06100 - Rough Carpentry: Furring, blocking, and shims.

1.03 REFERENCES

A. ADAAG - American with Disabilities Act, Accessibility Guidelines.

B. ANSI A117.1 - Accessible and Usable Buildings and Facilities.

C. ASTM International (ASTM):
   1. ASTM A 1008 - Standard Specification for Steel Sheet, Carbon, Cold-Rolled, Commercial Quality.
   2. ASTM D 4976 - Standard Specification for Polyethylene Plastics Molding and Extrusion Materials.
   3. ASTM E 84 - Standard Test Method for Surface Burning Characteristics of Building Materials.

1.04 SUBMITTALS

A. Submit under provisions of Section 01300.

B. Manufacturer's data sheets on each product to be used, including:
   1. Preparation instructions and recommendations.
   2. Storage and handling requirements and recommendations.
   3. Installation methods.

C. Shop Drawings: Provide layout and elevations of lockers with overall dimensions.

D. Maintenance Data: For adjusting, repairing, and replacing locker doors and latching mechanisms.

E. Verification Samples: For finish product specified, two samples, minimum size 6 inches (150 mm) square, representing actual product and color selected.

1.05 QUALITY ASSURANCE

A. Provide all lockers from a single manufacturer.

1.06 DELIVERY, STORAGE, AND HANDLING

A. Inspect lockers upon receipt for visible damage. Further inspection if necessary for hidden damage.

B. Store products in manufacturer's unopened packaging until ready for installation.

C. Sequence deliveries to avoid project delays, but minimize on-site storage.

PART 2 PRODUCTS

2.01 MANUFACTURERS

A. Acceptable Manufacturer: ASI Storage Solutions, which is located at: 900 Clary Connector; Eastanollee, GA 30538; Tel: 706-827-2720; Fax: 706-827-2710; Email:request info (info@asi-storage.com); Web:http://asi-storage.com

B. Requests for substitutions will be considered in accordance with provisions of Section 01600.

2.02 MATERIALS

A. Plastic: Plastic laminate faced phenolic core.
   1. Coat Hooks: Zinc plated forged steel; ball ends.

2. Fasteners: Zinc plated manufacturer's standard.

2.03 **PHENOLIC LOCKERS**

A. Standard Duty Laminate-Faced Solid Phenolic Lockers
1. Acceptable Manufacturer: ASI Storage Solutions
2. Series: Traditional Series by ASI.
3. Type of Lockers:
a. Cubbies - Lockers and Shelves: Non-locked, open storage.
1) Size: Each cubby opening shall be 12 inches (305 mm) width and depth of 12 inches (305 mm) as scheduled or indicated. The full unit shall be configured with two openings tall. The maximum height of the entire unit cannot exceed 60 inches (1219 mm).

B. Construction:
1. Components: Solid phenolic core decorative plastic laminate with multiple resin-impregnated kraft and surface sheets fused at high temperature and pressure. Units fabricated using stainless steel fasteners. Exposed edges shall be smooth and chamfered.
a. End Cover Panels shall be constructed of 1/2 inch (13 mm) solid phenolic core with plastic laminate. Color as scheduled.
b. Side Panels shall be constructed of 3/8 inch (9.5 mm) solid phenolic core plastic laminate.
c. Tops, Bottoms and Shelves shall be constructed of 1/2 inch (13 mm) solid phenolic core with Speckle-tone material plastic laminate.
2. Color: Verify color selection with district and Architect.
3. Mounting: 4 inches (102 mm) base mounting. Fabricate from black HDPE Polymer to form components with 1 inch (25 mm) nominal thickness.

PART 3 EXECUTION

3.01 **EXAMINATION**

A. Do not begin installation until substrates and bases have been properly prepared.

B. If substrate and bases are the responsibility of another installer, notify Architect of unsatisfactory preparation before proceeding.

3.02 **INSTALLATION**

A. Install lockers and accessories at locations shown in accordance with manufacturer's instructions.

B. Install lockers level and plumb with flush surfaces and rigid attachment to anchoring surfaces.

C. Anchor lockers to floor and wall at 48 inches (1.219 m) or less, as recommended by the manufacturer.

D. Fasten adjoining locker units together to provide rigid installation.

3.03 **ADJUSTING AND CLEANING**

A. Touch-up factory-finish and repair or replace damaged products before Substantial Completion.

3.04 **PROTECTION**

A. Protect installed products until completion of project.

END OF SECTION

OWNER	PROJECT MANAGER	ARCHITECT	GENERAL CONTRACTOR	STRUCTURAL ENGINEER	MEP ENGINEER
ASHLAND SCHOOL DISTRICT	HMK COMPANY	ARKITEK: DESIGN & ARCHITECTURE	TBD	CIOTA ENGINEERING	ARCSINE
CONTACT: STEVE MITZEL 885 SISKIYOU BOULEVARD, ASHLAND, OR 97520 541.482.2185 WWW.ASHLAND.K12.OR.US	CONTACT: DAVID MCKAY 695 COMMERCIAL ST. SE SUITE 116 SALEM, OR 97301 971.304.0710 DAVID@HMKCO.ORG	CONTACT: CHRISTOPHER BROWN 426 A ST. SUITE 101 ASHLAND,OR 97520 541.591.9988 ARKITEK@ARKITEK.US		CONTACT: CAMERON HARRIS, PE 156 CLEAR CREEK DR #101, ASHLAND, OR 97520 541.552.0290 CAMERON@CIOTAENGINEERING.COM	CONTACT: CHRIS HEIDL, P.E. 1236 DISK DR. MEDFORD, OR 97501 541.842.4188 CHEIDL@ARC-SINE.COM

WILLOW WIND RENOVATIONS

1497 E. MAIN ST. ASHLAND, OR 97520

VICINITY MAP - ASHLAND, OREGON

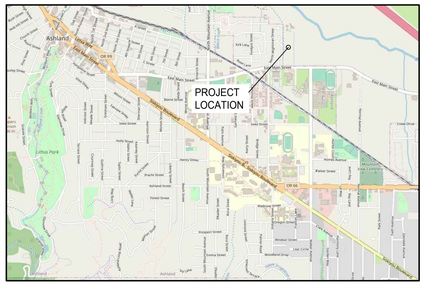

MATERIALS LEGEND

EARTH	DIMENSIONAL LUMBER
GRAVEL, ROCK	BLOCKING / SHIM
SAND, GROUT	WOOD
CONCRETE	PLYWOOD
MASONRY	CEILING / ACOUSTIC TILE / PANEL
METAL	BATT INSULATION

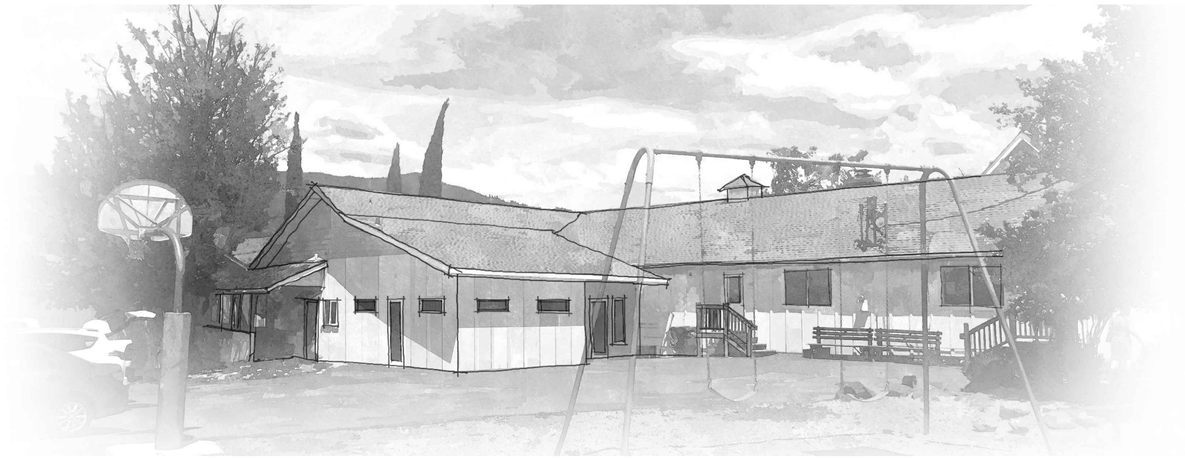

DRAWING INDEX

GENERAL NOTES

1. THE CONTRACTOR SHALL FIELD VERIFY ALL CONDITIONS AND DIMENSIONS PRIOR TO PROCEEDING WITH ANY WORK.

2. DIMENSIONS TAKE PRECEDENCE OVER DRAWING. DO NOT SCALE DRAWING TO DETERMINE ANY LOCATIONS. THE ARCHITECT SHALL BE NOTIFIED OF ANY DISCREPANCY PRIOR TO CONTINUING WITH WORK. DIMENSIONS ARE TAKEN TO THE FOF, FOC, FOM, OR GRID, UNO.

3. ALL CONSTRUCTION SHALL COMPLY WITH THE 2019 O.S.S.C. BUILDING CODE AND METHODS AND SHALL MAINTAIN THE STRUCTURAL INTEGRITY OF ANY CONSTRUCTION UNTIL ALL FINAL LATERAL AND VERTICAL CARRYING SYSTEMS ARE COMPLETED.

4. THE CONTRACTOR IS SOLELY RESPONSIBLE FOR ALL CONSTRUCTIONS MEANS AND METHODS.

5. CONTRACTOR SHALL BE RESPONSIBLE FOR VERIFICATION AND COORDINATION OF SUBCONTRACTORS WORK TO SECURE COMPLIANCE OF DRAWINGS AND SPECIFICATIONS FOR THE ACCURATE LOCATION OF STRUCTURAL MEMBERS, AND OPENINGS FOR MECHANICAL, ELECTRICAL, AND MISCELLANEOUS EQUIPMENT. CONTRACTORS SHALL VERIFY ALL DIMENSIONS AND OPENING SIZES, CLEARANCES REQUIRED FROM MFR PRIOR TO CONSTRUCTION AND INSTALLATION OF EQUIPMENT, FURNISHINGS, ACCESSORIES ETC.

6. TRADE PERMITS, INCLUDING BUT NOT LIMITED TO, MECHANICAL, ELECTRICAL, ETC. SHALL BE THE RESPONSIBILITY OF THE CONTRACTOR.

7. DETAILS NOTED AS "TYPICAL" OR "TYP" APPLY IN ALL CASES WHETHER OR NOT SPECIFICALLY REFERENCED. DETAILS THAT ARE SPECIFICALLY REFERENCED SHALL TAKE PRECEDENCE OVER "TYPICAL" OR "TYP." DETAILS. SPECIFIC DETAILS AND NOTES SHALL TAKE PRECEDENCE OVER GENERAL NOTES AND DETAILS.

8. WHERE COMPONENTS, ASSEMBLIES, ITEMS, EQUIP, ETC. ARE BASED UPON A PARTICULAR SUPPLIER, FABRICATOR AND/OR MFR. THE CONTRACTOR SHALL ENSURE, PROVIDE OPTIONS, ALLOW FOR, AND SHALL MAKE ANY CHANGES REQUIRED FOR THE APPROVED ALTERNATE TO MEET THE DESIGN INTENT OF THE DOCUMENTS.

9. CONTRACTOR SHALL VERIFY ALL COMPONENTS TO BE INSTALLED W/ EXT. WALL FOR DIMENSIONAL ACCURACY PRIOR TO FABRICATION, PURCHASE, INSTALLATION, ETC.

10. THE CONTRACTOR SHALL BE RESPONSIBLE FOR THE GENERAL SECURITY OF THE SITE WHILE THE JOB IS IN PROGRESS AND UNTIL JOB COMPLETION. EACH CONTRACTOR/SUBCONTRACTOR SHALL BE RESPONSIBLE FOR THE SECURITY AND PROTECTION OF ITS OWN MATERIALS, WORK PRODUCT AND EQUIPMENT.

11. IT SHALL BE THE RESPONSIBILITY OF THE CONTRACTOR TO LOCATE ALL EXISTING UTILITIES WHETHER SHOWN HEREON OR NOT AND TO PROTECT THEM FROM DAMAGE. THE CONTRACTOR SHALL BEAR ALL EXPENSES OF REPAIR OR REPLACEMENT OF UTILITIES OR OTHER PROPERTY DAMAGED BY OPERATIONS IN CONJUNCTION WITH THE PROSECUTION OF THE WORK.

12. ALL UNPAINTED FERROUS METALS EXPOSED TO THE WEATHER SHALL BE GALVANIZED, UNO.

13. SEPARATE ALL AL AND OTHER METALS FROM DIS-SIMILAR METALS WITH BITUMINOUS TAPE OR PT.

14. APPROPRIATE SEALANT SHALL BE USED TO SEAL ALL JOINTS OF MILLWORK, TRIM, EQUIPMENT WALL MOUNTING PENETRATIONS TO PRODUCE A WATERTIGHT SEAL.

15. DOORS NOT LOCATED BY DIMENSION SHALL BE CENTERED IN WALL OR SHALL BE LOCATED FOUR INCHES FROM FINISH WALL TO HINGE SIDE OF DOOR.

16. FASTENER SIZES AND CONNECTIONS PER STRUCTURAL ENGINEER OR AS NOTED. UNREFERENCED CONNECTIONS PER OSSC TABLE 2304.9.1.

DEFERRED SUBMITTALS

DESIGN/ BUILD PORTIONS OF THE PROJECT TO BE SUBMITTED FOR PERMIT BY GENERAL CONTRACTOR OR PERTINENT SUBCONTRACTOR AT A LATER DATE.

DEFERRED SUBMITTALS INCLUDE:

MECHANICAL DESIGN
PLUMBING DESIGN
ELECTRICAL DESIGN

LEGEND AND SYMBOLS

DETAIL
DETAIL IDENTIFICATION
DWG. NUMBER WHERE DETAIL IS DRAWN

WALL CROSS SECTION
SECTION IDENTIFICATION
DWG. NUMBER WHERE SECTION IS DRAWN

BUILDING CROSS SECTION
SECTION IDENTIFICATION
DWG. NUMBER WHERE SECTION IS DRAWN

BUILDING ELEVATION
ELEVATION IDENTIFICATION
DWG. WHERE ELEVATION IS DRAWN

GRID LINE
TOP TO BOTTOM, LETTERS
LEFT TO RIGHT, NUMBERS

INTERIOR ELEVATION
DETAIL NUMBER ON INTERIOR ELEVATION SHEET
ELEVATION DESIGNATION
DWG. NUMBER WHERE INT ELEVATION IS DRAWN

DOOR IDENTIFICATION
DOOR NUMBER

WALL TYPE IDENTIFICATION
WALL TYPE NUMBER

WINDOW IDENTIFICATION
WINDOW NUMBER

KEYNOTE
KEYNOTE NUMBER

ROOM IDENTIFICATION
ROOM NAME
ROOM NUMBER

NORTH ARROW
ARROW INDICATES PLAN NORTH

LEVEL LINE = ELEVATION
TARGET POINT, DATUM

CENTER LINE

F.O.M.	FACE OF MASONRY
F.O.C.	FACE OF CONCRETE
F.O.C.	FACE OF COLUMN
F.O.S.	FACE OF STUD / STRUC
F.O.FIN.	FACE OF FINISH

SEE INDIVIDUAL SHEETS FOR ADDITIONAL LEGENDS AND SYMBOLS

GOVERNING CODES

THE DESIGN OF THIS PROJECT IS BASED ON THE FOLLOWING CODES:

OREGON STRUCTURAL SPECIALTY CODE, 2019 ed.

OREGON MECHANICAL SPECIALTY CODE, 2019 ed.

OREGON PLUMBING SPECIALTY CODE, 2017 ed.

OREGON ELECTRICAL SPECIALTY CODE, 2017 ed.

OREGON ZERO ENERGY READY COMMERCIAL CODE, 2019 ed.

OREGON FIRE CODE, 2019 ed.

ABBREVIATIONS

ABV	ABOVE	HGT	HEIGHT
ACT	ACOUSTIC CEILING TILE	HR	HOUR
AFF	ABOVE FINISHED FLOOR	HW	HOT WATER
ALT	ALTERNATE	INSUL	INSULATION
B.O.	BOTTOM OF	IR	INSIDE RADIUS
BM	BEAM	JST	JOIST
CJ	CONTROL JOINT	M	MIRROR
CLG	CEILING	MAX	MAXIMUM
CLR	CLEAR	MB	MACHINE BOLT
CLT	CROSS LAMINATED TIMBER	MDL	MODEL
COL	COLUMN	MECH	MECHANICAL
CONC	CONCRETE	MTL	METAL
CONT	CONTINUOUS	N.I.C.	NOT IN CONTRACT
CPT	CARPET	(N)	NEW
DBL	DOUBLE	O/	OVER, ON
DIA	DIAMETER	OCC	OCCUPANCY
DIMS	DIMENSIONS	OPNG	OPENING
DW	DISHWASHER	O.C.	ON CENTER
EA	EACH	O.D.	OUTSIDE DIAMETER
ELEC	ELECTRICAL	P	PAINT
EQ	EQUAL(Y)	PWD	PLYWOOD
EX	EXISTING	P.T.	PRESSURE TREATED
FD	FLOOR DRAIN	RM	ROOM
FF	FINISHED FLOOR	R.O.	ROUGH OPENING
FIN	FINISH(ED)	SEP	SEPARATION
FRMG	FRAMING	SF	SQUARE FEET
FRZR	FREEZER	SJ	SAW JOINT
FTG	FOOTING	SQ. FT.	SQUARE FEET
F.R.	FIRE RESISTANT	SHTG	SHEATHING
GA	GAUGE	SIM	SIMILAR
GALV.	GALVANIZED	T.O.	TOP OF
GWB	GYPSUM WALL BOARD	TS	TUBE STEEL
G.B.	GRAB BAR	TYP	TYPICAL
G.I.	GALVANIZED IRON	TH	THRESHOLD
G.S.	GALVANIZED STEEL	UL	UNDERWRITERS LABORATORY
H	HIGH	UTIL	UTILITY
HDBD	HARDBOARD	U.N.O.	UNLESS NOTED OTHERWISE
HDR	HEADER	WD	WOOD
HDWD	HARDWOOD		

ENERGY ENVELOPE

NEW SLAB ON GRADE:	R-20 FOR FIRST 24"
NEW WOOD FRAMED FLOORS:	R-30
NEW EXTERIOR WALLS:	R-21
NEW ROOFS:	R-49
NEW WINDOWS:	U-0.36 MIN
NEW EXTERIOR DOORS:	U-0.36 MIN

WILLOW WIND RENOVATIONS

1497 E. MAIN ST.
ASHLAND, OR 97520

arkitek:
design and architecture, llc.

426 a street
ashland, or 97520
tel.: 541.591.9988

REGISTERED ARCHITECT
CHRISTOPHER PLUMMER BROWN
6692
ASHLAND, OREGON
STATE OF OREGON

Revision	Date

Date	02/01/21
Job	20_10
Drawn By	DW
Checked By	
Scale	AS NOTED

100% DD

Drawing Title
COVER SHEET

Drawing No.
G1.00

CODE SUMMARY

APPLICABLE BUILDING CODES:
- 2019 OREGON STRUCTURAL SPECIALTY CODE (OSSC)
- 2019 OREGON ZERO ENERGY READY COMMERCIAL CODE
- 2019 OREGON FIRE CODE (OFC)
- 2019 OREGON MECHANICAL SPECIALTY CODE (OMSC)
- 2017 OREGON ELECTRICAL SPECIALTY CODE (OESC)
- 2017 OREGON PLUMBING SPECIALTY CODE (OPSC)
- ICC A117.1-2009 ACCESSIBLE AND USABLE BUILDINGS AND FACILITIES

BUILDING AGENCY/ JURISDICTION:
JACKSON COUNTY

IEBC 2018 COMPLIANCE METHOD:
PRESCRIPTIVE, SEC 502 ADDITIONS, 503 ALTERATION

EXISTING AND PROPOSED CONSTRUCTION TYPES:
TYPE VB, NON-SPRINKLERED

EXISTING AND PROPOSED RESISTANCE RATINGS TYPES:

PRIMARY STRUCTURAL FRAME:	0 HR
BEARING WALLS, EXTERIOR:	0 HR
BEARING WALLS, INTERIOR:	0 HR
NON-BEARING PARTITION WALLS, EXTERIOR:	0 HR
NON-BEARING PARTITION WALLS, INTERIOR:	0 HR
FLOOR CONSTRUCTION:	0 HR
ROOF CONSTRUCTION:	0 HR

FIRE SEPARATION DISTANCES:

NORTH WALL:	>30' (OPEN FIELD)
EAST WALL:	11' (PROPERTY LINE)
SOUTH WALL:	>30' (OPEN AREA)
WEST WALL:	>30' (PARKING LOT)

EXISTING/ PROPOSED OCCUPANCIES:
E (EDUCATION)

MAX ALLOWABLE BUILDING HEIGHTS AND AREA:

TABULAR FLOOR AREA (A/T):	9500 SF (E, TYPE VB, NS)
HEIGHT:	1 STORIES, 40'
FRONTAGE INCREASE (I/F):	F=382' P=464' W=30' (382/464 - .25) 30/30 = .52 = 52%
SPRINKLER INCREASE (I/S):	0%
ALLOWABLE BUILDING AREA (A/A):	9500 + (9500 X .52) = 14400 SF

ACTUAL BUILDING AREA:

EXISTING:	7182 SF
ADDITIONS:	372 SF
TOTAL:	7554 SF

PRESCRIPTIVE ADDITIONS AND ALTERATIONS NOTES:

1. ALL NEW CONSTRUCTION TO COMPLY WITH 2019 OSSC.
2. ALL ACCESSIBLE FEATURES TO COMPLY WITH 2019 OSSC CHAP 11 AND 2009 ICC A117.1.
3. EXISTING BUILDING AND ADDITIONS COMPLY WITH AREA PROVISIONS OF OSSC CHAP 5.
4. ADDITIONS COMPLY WITH HEIGHT PROVISIONS OF OSSC CHAP 5.
5. BUILDING NOT LOCATED IN FLOOD HAZARD AREA.
6. CHANGES MADE TO EXISTING STRUCTURAL ELEMENTS CARRYING GRAVITY AND LATERAL LOAD TO COMPLY WITH IEBC SEC 502.4 AND 502.5.
7. DEMOLISHED WALLS, CEILING AND FLOORING TO BE REPLACED WITH SIMILAR MATERIALS.
8. NO CHANGE OF OCCUPANCY.
9. NO CHANGES MADE TO ACCESSIBLE ROUTES.

PLUMBING IMPROVEMENTS:

1. THREE NEW ACCESSIBLE RESTROOMS WITH WATER CLOSETS AND LAVATORIES TO BE ADDED.
2. THREE RESTROOMS TO BE RENOVATED TO COMPLY WITH ACCESSIBILITY REQUIREMENTS.
3. TWO NEW MOP SINKS TO BE ADDED.
4. ONE CLASSROOM SINK TO BE ADDED.

ENERGY EFFICIENCY MEASURES (ASHRAE 90.1-2016, CHAP 13)

ENVELOPE COMPLIANCE METHOD: PRESCRIPTIVE
CLIMATE ZONE: 4C
BUILDING SPACE CONDITIONING TYPE: NON-RESIDENTIAL

BUILDING COMPONENTS	CAVITY R-VALUE	CONT. R-VALUE	U-FACTOR
ROOF			
ATTIC INSULATION	R-49		
WALLS			
WOOD FRAMED	R-21		
FLOORS			
SLAB-ON-GRADE, HEATED		R-20 FOR 24"	
WOOD FRAMED	R-30		
FENESTRATIONS			
NONMETAL FRAMING			U-0.31
SHGC = 0.36			

PLUMBING FIXTURE CALCULATIONS

CLASSIFICATION	DESCRIPTION	OCC	WATER CLOSETS			LAVATORIES		
			RATIO	MALE	FEMALE	RATIO	MALE	FEMALE
BUSINESS	-	9	1 PER 25	0.18	0.18	1 PER 40	0.11	0.11
EDUCATIONAL	-	226	1 PER 50	2.26	2.26	1 PER 50	2.26	2.26
STORAGE	-	10	1 PER 100	0.05	0.05	1 PER 100	0.05	0.05
SUBTOTAL				2.49	2.49		2.42	2.42
TOTAL REQUIRED				3	3		3	3
TOTAL PROVIDED				6 UNISEX			6 UNISEX	

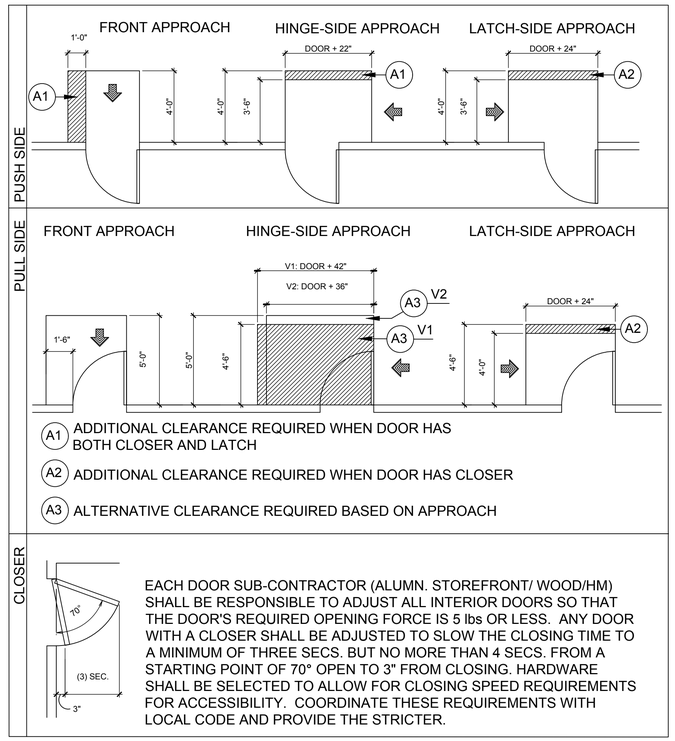

MANEUVERING CLEARANCES AT MANUAL SWINGING DOORS - SEC 404 (1)

SCALE: N.T.S.

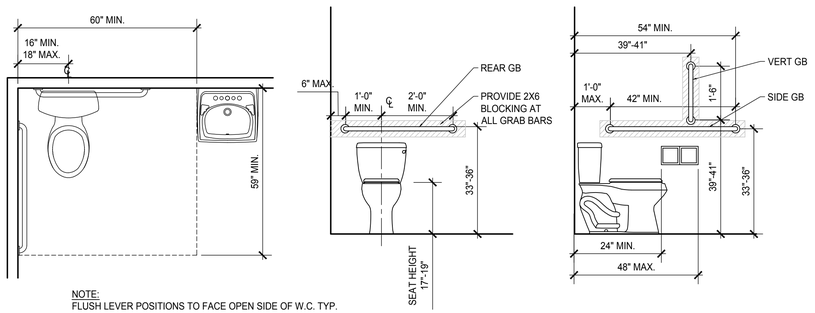

WATER CLOSET CLEARANCE FOR WHEELCHAIR ACCESS

GRAB BAR, WATER CLOSET, & TOILET PAPER DISPENSER TYP. LOCATIONS

ACCESSIBLE WATER CLOSETS & TOILET COMPARTMENTS - SEC 604 AND 609 (2)

SCALE: 1/2"=1'-0" ON 24 X 36 1/4"=1'-0" ON 11 X 17

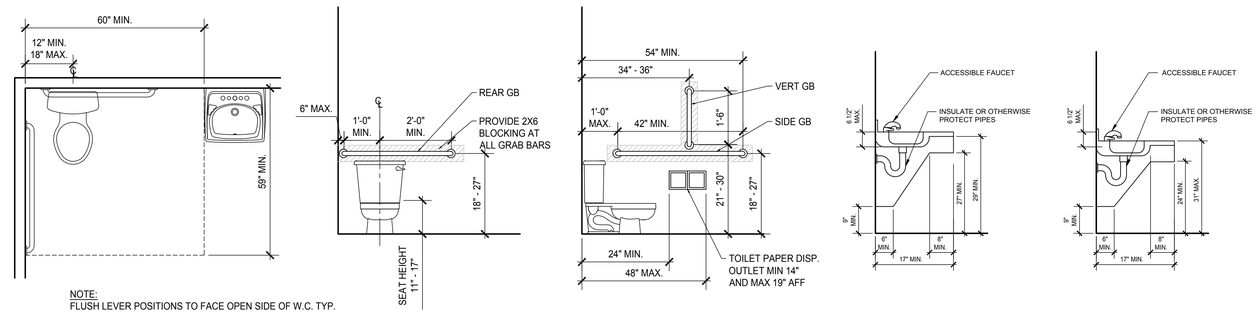

WATER CLOSET CLEARANCE FOR WHEELCHAIR ACCESS

GRAB BAR, WATER CLOSET, & TOILET PAPER DISPENSER TYP. LOCATIONS

STANDARD LAVATORY

CHILDREN'S LAVATORY

CHILDREN'S WATER CLOSETS & TOILET COMPARTMENTS - SEC 604 AND 609 (3)

SCALE: 1/2"=1'-0" ON 24 X 36 1/4"=1'-0" ON 11 X 17

LAVATORY CLEARANCES - SEC 602 (4)

SCALE: 1/2"=1'-0" ON 24 X 36 1/4"=1'-0" ON 11 X 17

NOTE: GRAB BARS
- PROVIDE 12" CLEAR AREA ABOVE GRAB BARS TYP.
- PROVIDE 1.5" CLEAR AREA BETWEEN GRAB BARS AND ADJACENT ACCESSORIES I.E. SHOWER CONTROLS, SHOWER FITTING, AND OTHER GRAB BARS
- PROVIDE BLOCKING TO SUPPORT MIN. 250 LBS. OF VERTICAL AND HORIZONTAL FORCE

NOTE:
ALL EQUIPMENT CONTROLS OR PRODUCT DISPENSER LOCATIONS MUST BE WITHIN REACH RANGE AS INDICATED

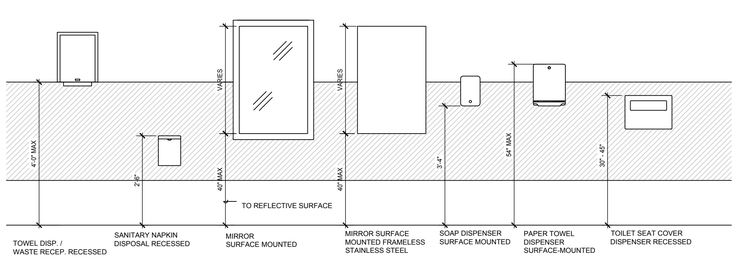

ACCESSORY MOUNTING HEIGHTS (5)

SCALE: 1/2"=1'-0" ON 24 X 36 1/4"=1'-0" ON 11 X 17

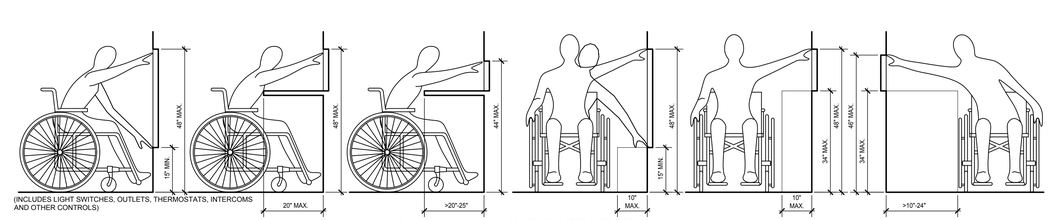

NOTE: ALL CONTROLS IN ACCESSIBLE LOCATIONS TO COMPLY WITH THESE CRITERIA

REACH RANGES - SEC 308 (6)

SCALE: 1/2"=1'-0" ON 24 X 36 1/4"=1'-0" ON 11 X 17

WILLOW WIND RENOVATIONS

1497 E. MAIN ST.
ASHLAND, OR 97520

arkitek:
design and architecture, llc.
426 a street
ashland, or 97520
tel.: 541.591.9988

REGISTERED ARCHITECT
CHRISTOPHER PLUMMER BROWN
6622
ASHLAND, OREGON
STATE OF OREGON

Revision	Date

Date	02/01/21
Job	20_10
Drawn By	DW
Checked By	
Scale	AS NOTED

100% DD

Drawing Title
CODE REVIEW/ ACC. STANDARDS

Drawing No.
G2.00

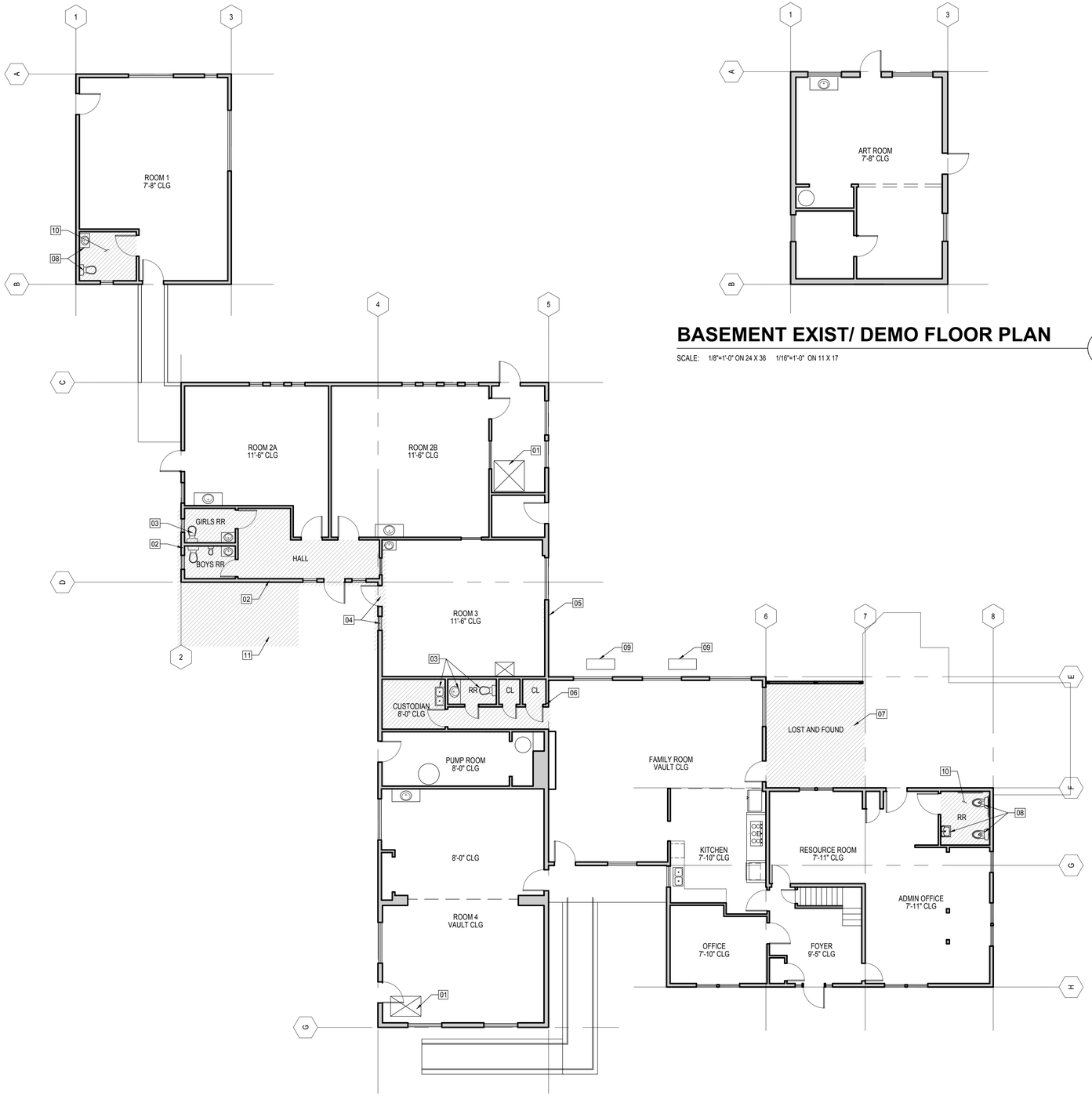

MAIN FLOOR EXIST/ DEMO FLOOR PLAN

1

SCALE: 1/8"=1'-0" ON 24 X 36 1/16"=1'-0" ON 11 X 17

N

0 5' 16'

BASEMENT EXIST/ DEMO FLOOR PLAN

3

SCALE: 1/8"=1'-0" ON 24 X 36 1/16"=1'-0" ON 11 X 17

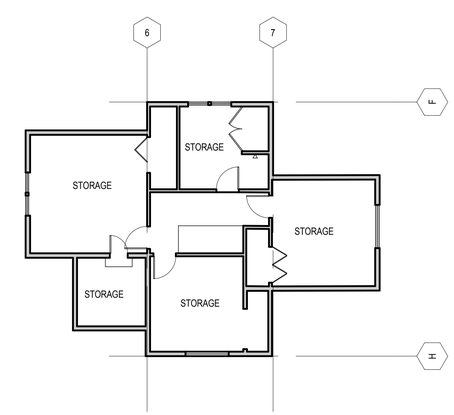

SECOND FLOOR EXIST/ DEMO FLOOR PLAN

2

SCALE: 1/8"=1'-0" ON 24 X 36 1/16"=1'-0" ON 11 X 17

EXISTING/ DEMOLITION FLOOR PLAN SHEET NOTES:

1. THIS DRAWING IS ONLY TO ASSIST IN SHOWING SCOPE OF DEMOLITION WORK AND IS NOT INTENDED TO INDICATE ALL DEMOLITION.
2. NOT ALL ITEMS TO BE DEMOLISHED ARE SHOWN ON THE PLAN. CONTRACTOR SHALL BE RESPONSIBLE FOR PERFORMING A WALK-THRU OF THE SITE PRIOR TO BID AND CONSTRUCTION AND BECOMING FAMILIAR WITH ALL EXISTING CONDITIONS FOR THE PURPOSE OF IDENTIFYING POSSIBLE CRITICAL ITEMS, NOT ADDRESSED OR INCORRECTLY ADDRESSED, WHICH REQUIRE REMOVAL OR RELOCATION.
3. CONTRACTOR SHALL CHECK AND IDENTIFY ALL EXISTING WATER, SANITARY AND ELECTRIC LINES WHICH ARE TO REMAIN. UTILITIES TO REMAIN SHALL BE PROTECTED FROM DAMAGE DURING DEMOLITION AND CONSTRUCTION.
4. EXECUTION OF DEMOLITION SHALL PROGRESS IN SUCH A MANNER AS NOT TO INTERFERE WITH SAFETY AND CONVENIENCE THE PUBLIC AND THOSE AROUND THE SITE.
5. WASTE MATERIALS AND RUBBISH FROM DEMOLITION OPERATIONS SHALL BE REMOVED FROM SITE AS RAPIDLY AS POSSIBLE AND SHALL NOT BE ALLOWED TO ACCUMULATE ON PREMISES. CONTRACTOR SHALL BE RESPONSIBLE FOR DISPOSAL OF ALL WASTE MATERIAL.
6. PROTECT ALL EXISTING WALLS, FLOORS, ROOFS, FINISHES, EQUIPMENT, CASEWORK, AND FURNISHING TO REMAIN FROM DAMAGE DURING DEMOLITION. PATCH AND REPAIR ALL EXISTING SURFACES DAMAGED BY DEMOLITION AND/OR INSTALLATION OF NEW WORK, AS REQUIRED TO MATCH ADJACENT SURFACES AND TO RECEIVE NEW FINISHES.
7. CONTRACTOR SHALL EXERCISE EXTREME CARE WHEN REMOVING EXISTING ITEMS THAT ARE SCHEDULED TO BE RELOCATED AND/OR REUSED. PROTECT AND STORE ITEMS ON SITE.
8. REMOVE ALL EXISTING CONSTRUCTIONS AND FINISHES NECESSARY FOR THE COMPLETION OF THE WORK AS DEPICTED ON THE DRAWINGS, INCLUDING BUT NOT LIMITED TO, ITEMS SHOWN ON THE PLANS WITH HATCHES. NECESSARY DISCONNECTS AND ALTERATIONS TO EXISTING MECHANICAL, PLUMBING, AND ELECTRICAL SYSTEMS SHALL BE INCLUDED. PATCH AS REQUIRED ALL CONSTRUCTIONS TO REMAIN IN ACCORDANCE WITH THE CONTRACT DRAWINGS.
9. REMOVE ONLY NON LOAD BEARING CONSTRUCTION AND PARTITIONS UNLESS NOTED IN DRAWINGS. CONTRACTOR TO VERIFY, PRIOR TO REMOVAL, THAT NO STRUCTURAL COMPONENTS, I.E. BEARING WALLS, BEAMS, HEADERS, ETC., SUPPORTING FLOOR, ROOF OR CEILING JOISTS ARE DESIGNATED FOR REMOVAL. CONTACT THE ARCHITECT PRIOR TO REMOVAL OF ANY CONSTRUCTION IN QUESTION OR DEVIATING FROM THE DESIGN INTENT. CONTRACTOR'S NON CONTACT OF ARCHITECT PRIOR TO REMOVAL OF ANY WORK INDICATES HIS COMPLETE UNDERSTANDING THAT NO LOAD BEARING OR STRUCTURAL WORK OUTSIDE OF THE SCOPE IS BEING ALTERED UNDER THIS CONTRACT.
10. WHERE EXISTING BEARING WALLS/COLUMNS ARE SCHEDULED FOR DEMOLITION, PROVIDE TEMPORARY SHORING/BRACING AS REQUIRED TO SUPPORT EXISTING LOADS PRIOR TO STARTING DEMOLITION.
11. WHERE INDICATED, REMOVE ELECTRICAL WIRING BACK TO THE NEAREST JUNCTION BOX AND CAP IN ACCORDANCE WITH CODE.
12. WHERE INDICATED, REMOVE PLUMBING LINES BACK TO THE NEAREST POINT OF CIRCULATION AND CAP IN ACCORDANCE WITH CODE.
13. WHERE INDICATED, REMOVE HVAC RUNS BACK TO THE NEAREST POINT OF CIRCULATION AND CAP IN ACCORDANCE WITH CODE.
14. WHERE EXISTING WALLS AND DOOR FRAMES ARE DEMOLISHED, REMOVE OR CUT OFF FLUSH ANCHOR BOLTS, CONDUIT, PIPING IN FLOOR AND FILL HOLES W/ CEMENTITIOUS UNDERLAYMENT/GROUT FLUSH W/ FLOOR SURFACE.
15. CONTRACTOR SHALL BE RESPONSIBLE FOR VERIFYING THE ABSENCE OF ANY HAZARDOUS MATERIALS IN LOCATIONS AND ASSEMBLIES DESIGNATED FOR DEMOLITION. CONTRACTOR TO NOTIFY OWNER IMMEDIATELY IF THEY SUSPECT THE PRESENCE OF ANY HAZARDOUS MATERIALS.
16. CONTRACTOR SHALL PROVIDE STAGING/DEMOLITION PLAN AND COORDINATE WITH DISTRICT ON SITE ACCESS DURING PRE-CONSTRUCTION MEETING.
17. SEE CONSULTANTS DRAWINGS FOR ADDITIONAL ELECTRICAL, PLUMBING AND HVAC DEMOLITION SCOPE.

EXISTING/ DEMOLITION FLOOR PLAN KEY NOTES:

01 EXISTING CRAWLSPACE ACCESS TO REMAIN
02 DEMOLISH EXISTING WALL FRAMING AT NEW RESTROOMS
03 DEMOLISH ALL EXISTING PLUMBING FIXTURES AT NEW RESTROOMS
04 DEMOLISH EXISTING WINDOW AND DOOR
05 DEMOLISH EXISTING WALL AT NEW DOOR OPENING
06 DEMOLISH EXISTING INTERIOR WALLS AT NEW CLOSET AND RESTROOM
07 DEMOLISH EXISTING FOUNDATIONS, FRAMING, AND ROOF AT NEW HEATH ROOM
08 DEMOLISH EXISTING PLUMBING FIXTURES AT RENOVATED RESTROOMS
09 DEMOLISH EXISTING HVAC CONDENSING UNITS
10 DEMOLISH EXISTING FLOORING AT RENOVATED RESTROOMS
11 DEMOLISH EXISTING PLANTER AND A/C PAVING AT NEW RESTROOMS

WILLOW WIND RENOVATIONS

1497 E. MAIN ST.
ASHLAND, OR 97520

arkitek:
design and
architecture, llc.

426 a street
ashland, or 97520
tel.: 541.591.9988

REGISTERED ARCHITECT
CHRISTOPHER PLUMMER BROWN
6028
ASHLAND, OREGON
STATE OF OREGON

Revision	Date

Date	02/01/21
Job	20_10
Drawn By	DW
Checked By	
Scale	1/8"=1'-0"

100% DD

Drawing Title
EXISTING/ DEMOLITION FLOOR PLANS

Drawing No.
AD1.01

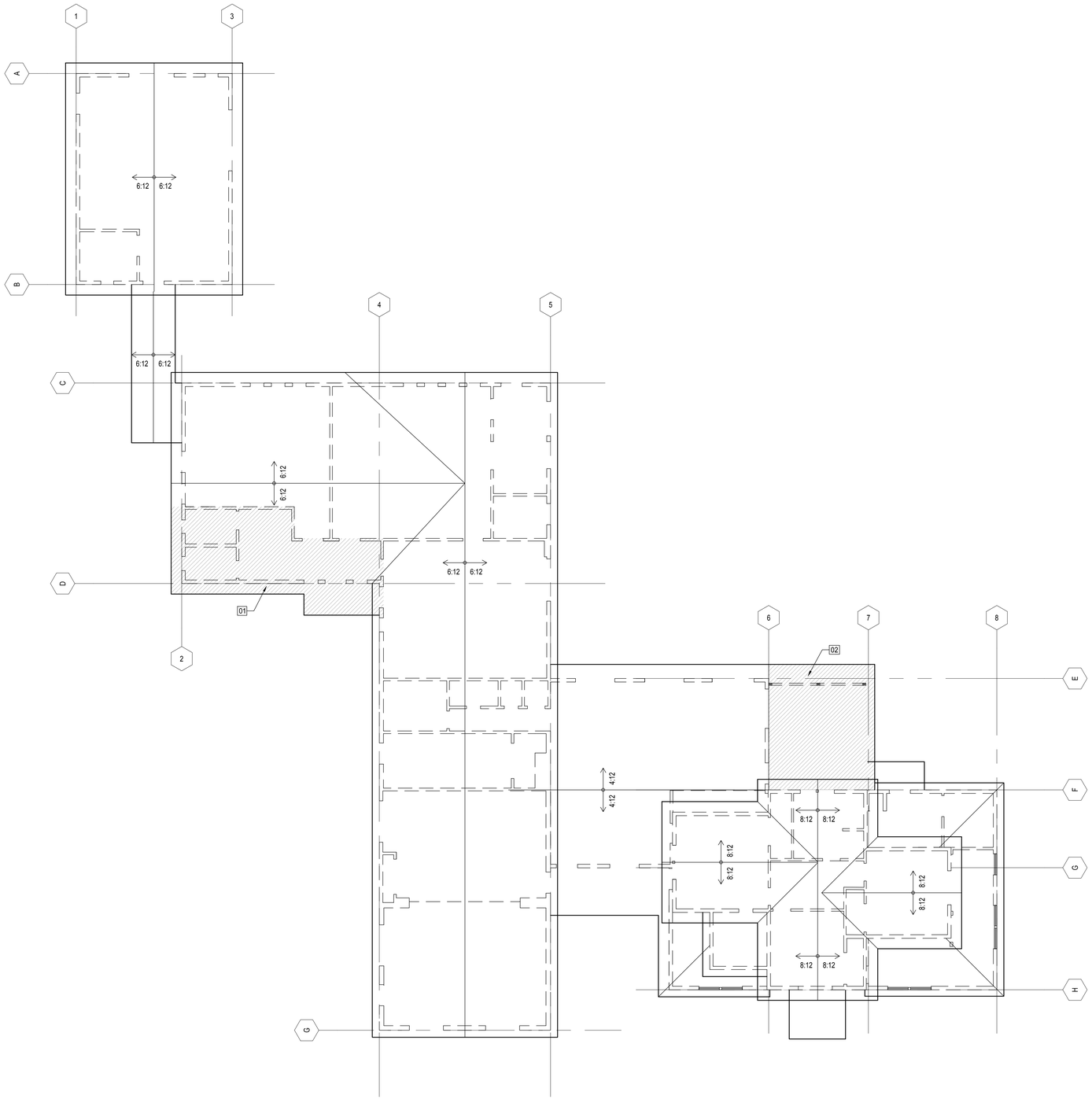

EXIST/ DEMO ROOF PLAN

1

SCALE: 1/8"=1'-0" ON 24 X 36 1/16"=1'-0" ON 11 X 17

N

0 5' 16'

EXISTING/ DEMOLITION ROOF PLAN SHEET NOTES:

1. FIELD VERIFY EXTENT OF ROOF DEMOLITION.

EXISTING/ DEMOLITION ROOF PLAN KEY NOTES:

01 DEMOLISH EXISTING ROOFING AT NEW RESTROOMS

02 DEMOLISH EXISTING ROOF AT NEW HEALTH ROOM

WILLOW WIND RENOVATIONS

1497 E. MAIN ST.
ASHLAND, OR 97520

arkitek:
design and
architecture, llc.

426 a street
ashland, or 97520
tel.: 541.591.9988

REGISTERED ARCHITECT
CHRISTOPHER PLUMMER BROWN
6022
ASHLAND, OREGON
STATE OF OREGON

Revision	Date

Date	02/01/21
Job	20_10
Drawn By	DW
Checked By	
Scale	1/8"=1'-0"

100% DD

Drawing Title

EXISTING/ DEMOLITION ROOF PLAN

Drawing No.

AD1.02

PROJECT INFORMATION

PROJECT NAME:	WILLOW WIND RENOVATIONS
PROJECT DESCRIPTION:	RENOVATIONS AND ADDITIONS TO MAIN BUILDING
ADDRESS:	1497 E. MAIN ST. ASHLAND, OR 97520
MAP & TAX LOT:	391E10700

CLIENT INFORMATION

NAME:	ASHLAND SCHOOL DISTRICT NO. 5
ADDRESS:	885 SISKIYOU BLVD ASHLAND OR, 97520

NARRATIVE

THIS PROJECT INCLUDES THE RENOVATION OF AND ADDITIONS TO THE MAIN CLASSROOM BUILDINGS, INCLUDING A NEW RESTROOM CORE, A NEW HEALTH ROOM, RENOVATED RESTROOMS, AND MISC. SITE IMPROVEMENTS.

ZONING INFORMATION

ZONING: EFU
SETBACKS:
FRONT: 30'
SIDE: 30'
REAR: 30'
MAX BUILDING HEIGHT: 35'

PLANNING SUMMARY

LOT AREA COVERAGE	AREA	% OF LOT
TOTAL LOT AREA	873670 SF	100.0%
EXISTING STRUCTURES (TO REMAIN)	11496 SF	1.3%
PROPOSED STRUCTURES	372 SF	<0.1%
TOTAL LOT COVERAGE	12020 SF	1.4%
TOTAL LANDSCAPE AREA	812470 SF	93.0%
TOTAL IMPERVIOUS SURFACING	61200 SF	7.0%

BUILDING AREA SUMMARY

EXISTING STRUCTURES	12161 SF
NEW ADDITIONS	372 SF
TOTAL SQUARE FEET	12533 SF

PARKING CALCULATIONS

EXISTING NUMBER OF SPACES

STANDARD	71
ACCESSIBLE	3 (1 VAN)

NO CHANGE TO NUMBER OF STUDENTS OR FACULTY

ARCHITECTURAL SITE PLAN SHEET NOTES:

1. SEE MECHANICAL, ELECTRICAL, PLUMBING DRAWINGS FOR ADDITIONAL PROJECT SCOPE.
2. LOCATION AND ELEVATION OF ALL UTILITY CONNECTIONS TO BE DESIGN/ BUILD. COORDINATE WITH PERTINENT SUBCONTRACTOR.
3. SEE LANDSCAPE DRAWINGS FOR ALL FINISHED GRADES, SITE DRAINAGE, STORM WATER PROCESSING, SITE IMPROVEMENTS, HARDSCAPE, SITE PLANTINGS, IRRIGATION, AND SITE LIGHTING.
4. THE CONTRACTOR SHALL FIELD VERIFY LOCATIONS AND ELEVATIONS OF EXISTING UTILITIES AND TOPOGRAPHIC FEATURES PRIOR TO COMMENCEMENT OF CONSTRUCTION ACTIVITY. THE CONTRACTOR SHALL NOTIFY THE ARCHITECT OF ANY DISCREPANCIES OR VARIATIONS FROM THE PLANS.
5. THE CONTRACTOR WILL BE RESPONSIBLE FOR PROVIDING AND MAINTAINING TRAFFIC CONTROL DEVICES SUCH AS BARRICADES, WARNING SIGNS, DIRECTIONAL SIGNS, FLAGMEN AND LIGHTS TO CONTROL THE MOVEMENT OF TRAFFIC WHERE NECESSARY. PLACEMENT OF THESE DEVICES SHALL BE APPROVED BY THE OWNER PRIOR TO PLACEMENT. TRAFFIC CONTROL DEVICES SHALL CONFORM TO THE APPROPRIATE CITY AND STATE REGULATIONS.
6. ALL PAVING, CONCRETE CURB, GUTTER AND SIDEWALK SHALL BE FURNISHED AND INSTALLED IN ACCORDANCE WITH THE REQUIREMENTS OF THE COUNTY. SEE ARCHITECTURAL AND LANDSCAPE DRAWINGS FOR ADDITIONAL HARDSCAPE APPLICATIONS.
7. CLEARED MATERIALS SHALL BE REMOVED FROM PROJECT SITE.
8. PROTECT AND MAINTAIN BENCHMARKS AND SURVEY CONTROL POINTS FROM DISTURBANCE DURING CONSTRUCTION.
9. THE INTENT OF THE PROPOSED CONSTRUCTION IS TO PRESERVE AS MUCH OF THE EXISTING PAVEMENT, CURB, GUTTER AND SIDEWALK AS POSSIBLE. PROTECT EXISTING SITE IMPROVEMENTS TO REMAIN FROM DAMAGE DURING CONSTRUCTION.

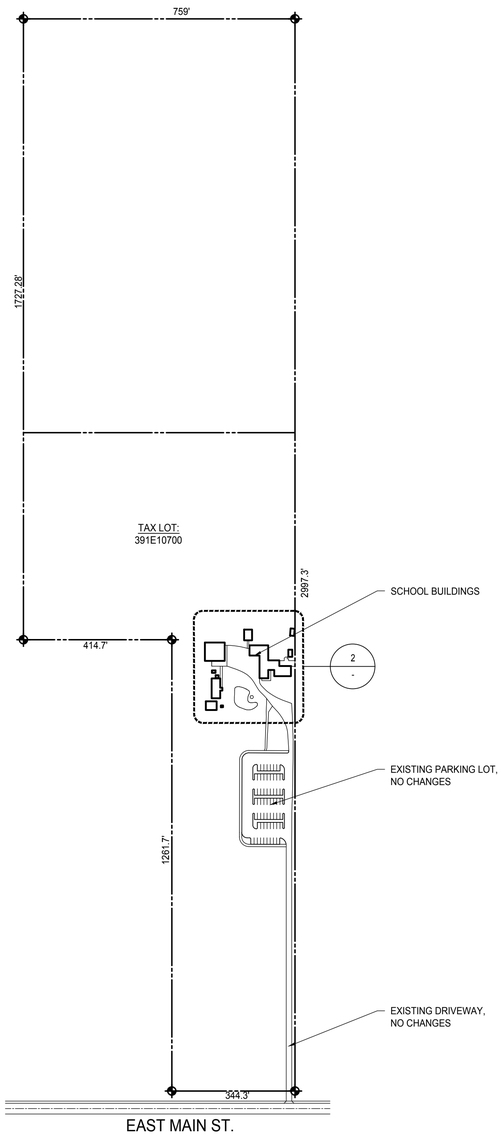

ARCHITECTURAL SITE PLAN

1

SCALE: 1"=200' ON 24 X 36 1"=400' ON 11 X 17

N

0 100' 400'

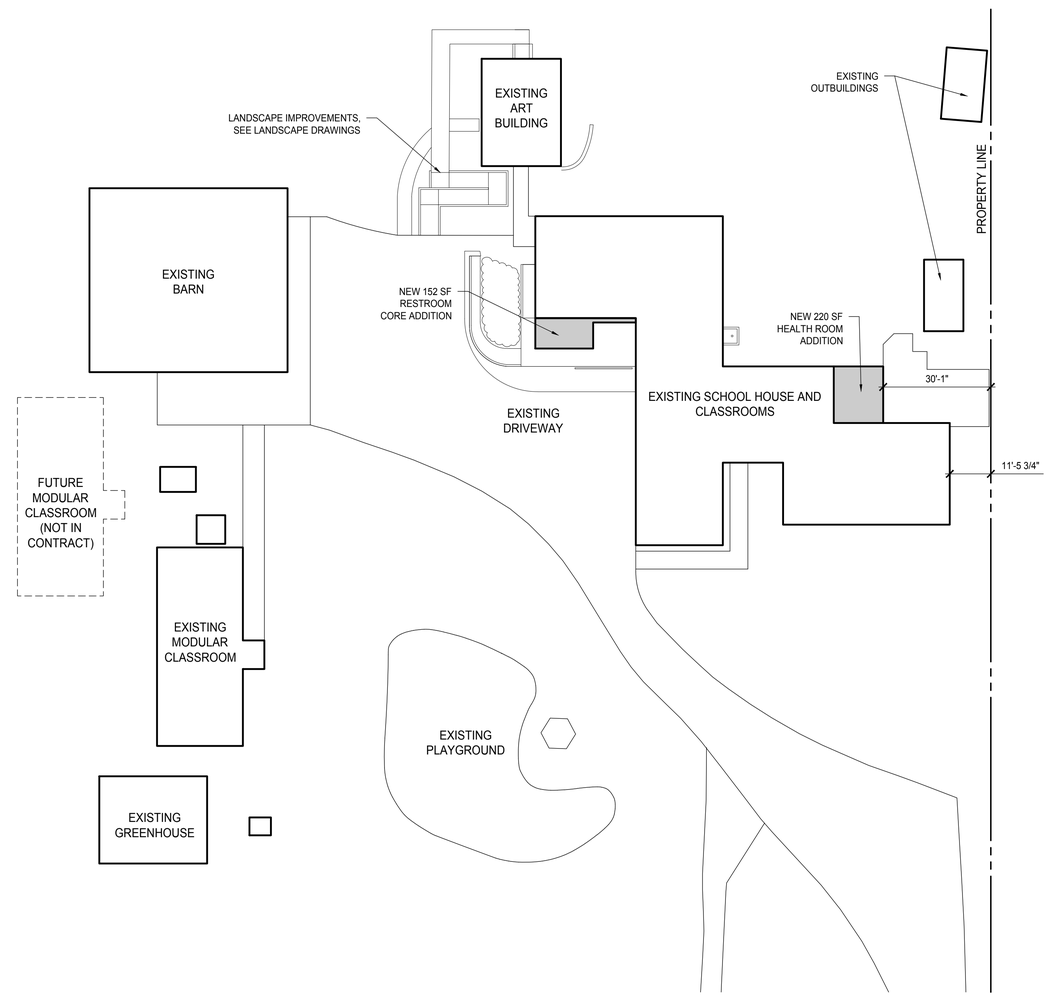

ENLARGED SITE PLAN

2

SCALE: 1"=20' ON 24 X 36 1"=40' ON 11 X 17

N

0 10' 40'

WILLOW WIND RENOVATIONS

1497 E. MAIN ST.
ASHLAND, OR 97520

arkitek:
design and architecture, llc.

426 a street
ashland, or 97520
tel.: 541.591.9988

REGISTERED ARCHITECT
CHRISTOPHER PLUMMER BROWN
6028
ASHLAND, OREGON
STATE OF OREGON

Revision	Date

Date	02/01/21
Job	20_10
Drawn By	DW
Checked By	
Scale	AS NOTED

100% DD

Drawing Title

ARCHITECTURAL SITE PLAN

Drawing No.

A1.00

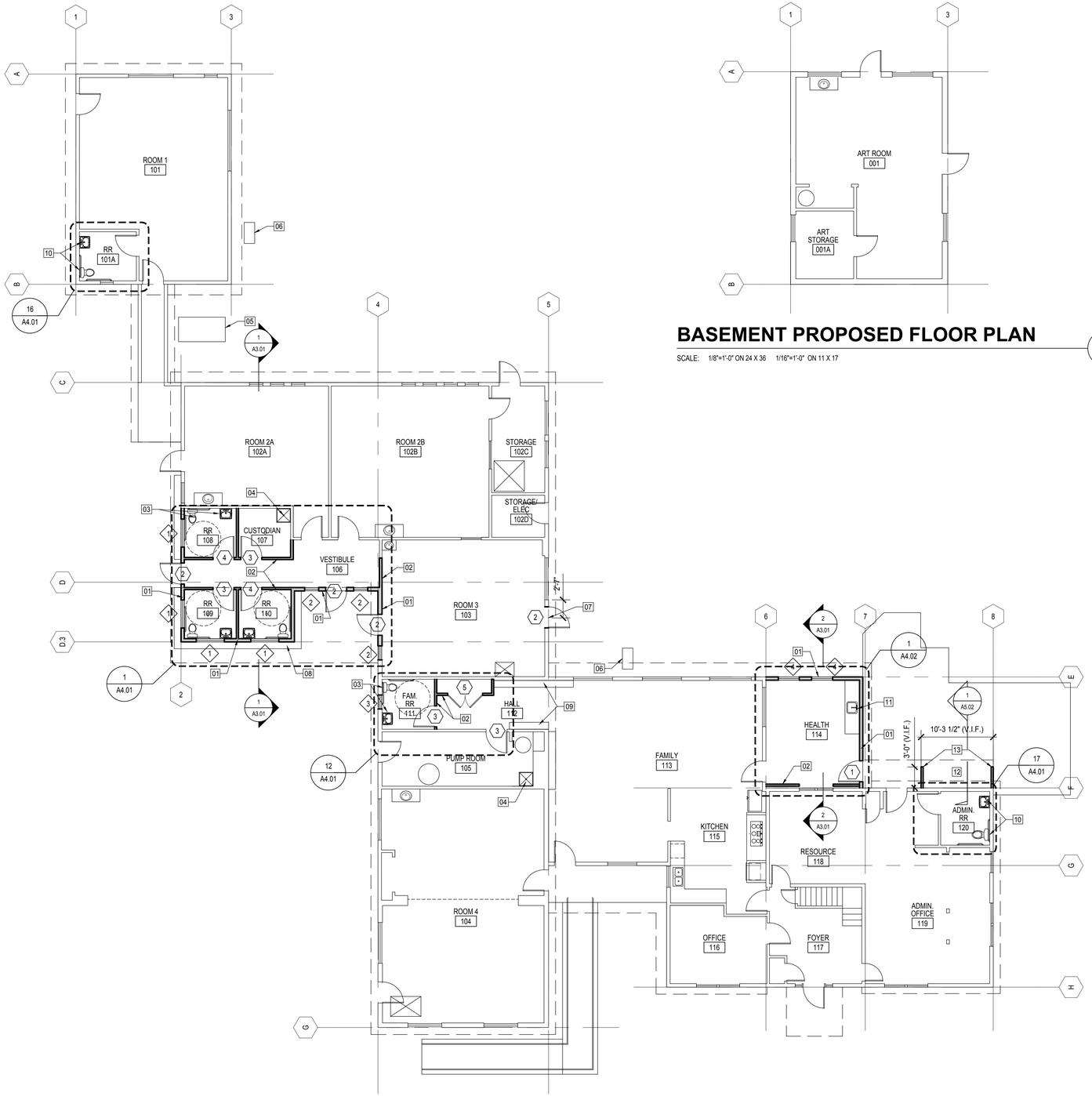

MAIN FLOOR PROPOSED FLOOR PLAN

1

SCALE: 1/8"=1'-0" ON 24 X 36 1/16"=1'-0" ON 11 X 17

N

0 5' 16'

BASEMENT PROPOSED FLOOR PLAN

3

SCALE: 1/8"=1'-0" ON 24 X 36 1/16"=1'-0" ON 11 X 17

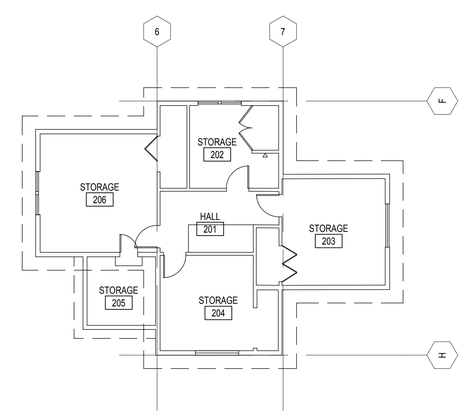

SECOND FLOOR PROPOSED FLOOR PLAN

2

SCALE: 1/8"=1'-0" ON 24 X 36 1/16"=1'-0" ON 11 X 17

PROPOSED FLOOR PLAN SHEET NOTES:

1. FIELD VERIFY ALL DIMENSIONS PRIOR TO COMMENCEMENT OF WORK.
2. HVAC UNITS AND DUCTWORK SHOW FOR REFERENCE ONLY. SEE MECH. DRAWINGS FOR FINAL LOCATION, UNIT SIZE, AND CURB REQUIREMENTS.
3. SEE MECHANICAL, ELECTRICAL, AND PLUMBING DRAWINGS FOR ADDITIONAL PROJECT SCOPE.

PROPOSED FLOOR PLAN KEY NOTES:

01 NEW 2X6 EXTERIOR WALL W/ R-21 BATT INSULATION
02 NEW 2X4 INTERIOR WALL
03 NEW CHILD HEIGHT PLUMBING FIXTURES AT NEW RESTROOMS, TYP.
04 NEW MOP SINK W/ 4'-0" H. STAINLESS STEEL WAINSCOT
05 NEW GROUND MOUNT MECH. UNIT
06 NEW MECH. CONDENSING UNIT
07 NEW EXTERIOR DOOR IN NEW OPENING
08 NEW EXTERIOR 12" X 12" X 60", TWO-TIER PHENOLIC CUBBIES W/ SLOPED TOP
09 NEW INTERIOR 12" X 12" X 60", TWO-TIER PHENOLIC CUBBIES
10 NEW PLUMBING FIXTURES AT RENOVATED RESTROOMS, TYP.
11 NEW LOWER CABINETS AND SINK AT NEW HEALTH ROOM
12 NEW LOST AND FOUND ALCOVE
13 NEW 2X4 SCREEN WALLS AT NEW LOST AND FOUND ALCOVE, MATCH EXISTING BUILDING SIDING

WILLOW WIND RENOVATIONS

1497 E. MAIN ST.
ASHLAND, OR 97520

arkitek:
design and
architecture, llc.

426 a street
ashland, or 97520
tel.: 541.591.9988

REGISTERED ARCHITECT
CHRISTOPHER PLUMMER BROWN
6028
ASHLAND, OREGON
STATE OF OREGON

Revision	Date

Date	02/01/21
Job	20_10
Drawn By	DW
Checked By	
Scale	1/8"=1'-0"

100% DD

Drawing Title
PROPOSED FLOOR PLANS

Drawing No.
A1.01

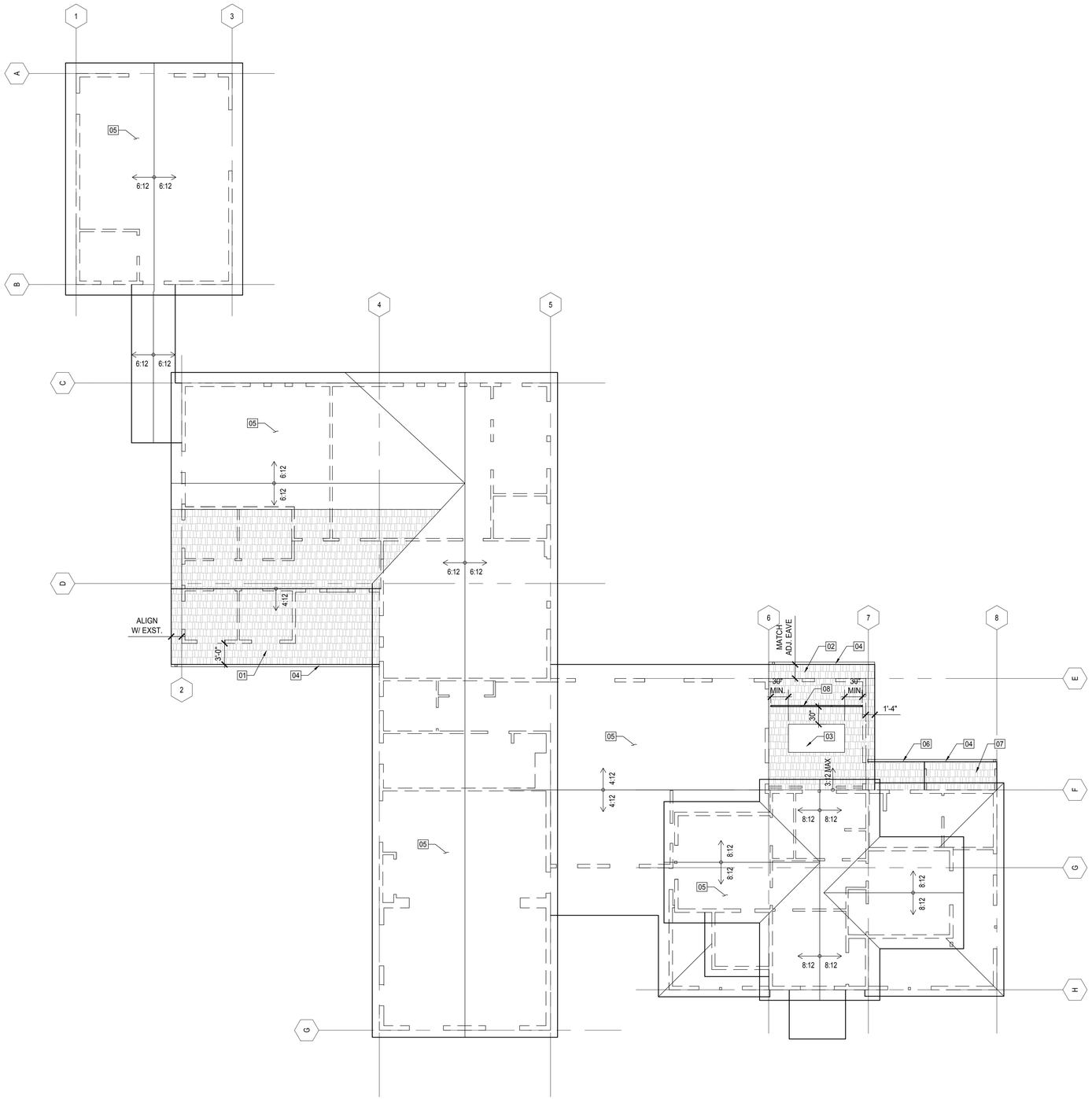

PROPOSED ROOF PLAN

SCALE: 1/8"=1'-0" ON 24 X 36 1/16"=1'-0" ON 11 X 17

1

N

0 5' 16'

PROPOSED ROOF PLAN SHEET NOTES:

1. REPLACEMENT ROOFING TO MATCH EXISTING.
2. AT NEW PENETRATIONS IN EXISTING ROOF, PATCH ROOF WATERTIGHT USING COMPATIBLE MATERIALS.
3. VERIFY EXISTING ROOF CONDITIONS. NOT ALL EXISTING ROOFTOP ELEMENTS SHOWN.
4. HVAC UNITS AND DUCTWORK SHOW FOR REFERENCE ONLY. SEE MECH. DRAWINGS FOR FINAL LOCATION, UNIT SIZE, AND CURB REQUIREMENTS.

PROPOSED ROOF PLAN KEY NOTES:

01 NEW ASPHALT SHINGLE ROOFING AT NEW RESTROOMS, MATCH EXISTING

02 NEW ASPHALT SHINGLE ROOFING AT NEW HEALTH ROOM, MATCH EXISTING, MATCH ADJACENT EAVE HEIGHT

03 NEW ROOFTOP MECH. UNIT

04 NEW CONT. METAL GUTTERS AND DOWNSPOUTS AT NEW ROOFS

05 EXISTING ASPHALT SHINGLE ROOFING

06 NEW ASPHALT SHINGLE ROOFING AT EXISTING AWNING ROOF, MATCH EXISTING

07 NEW ASPHALT SHINGLE ROOFING AT NEW LOST AND FOUND ROOF, MATCH EXISTING, MATCH ADJACENT ROOF PITCH AND HEIGHT

08 NEW 42" HIGH MECH. GUARD RAIL AT NEW MECH. UNIT, 2"X2" STEEL POST AT 6'-0" O.C. MAX, 2"X2" STEEL RAILS, 21" MAX OPENING SIZE, FLASH PER ROOF MFR., PAINT

WILLOW WIND RENOVATIONS

1497 E. MAIN ST.
ASHLAND, OR 97520

arkitek:
design and
architecture, llc.

426 a street
ashland, or 97520
tel.: 541.591.9988

REGISTERED ARCHITECT
CHRISTOPHER PLUMMER BROWN
6629
ASHLAND, OREGON
STATE OF OREGON

Revision	Date

Date	02/01/21
Job	20_10
Drawn By	DW
Checked By	
Scale	1/8"=1'-0"

100% DD

Drawing Title

PROPOSED ROOF PLAN

Drawing No.

A1.02

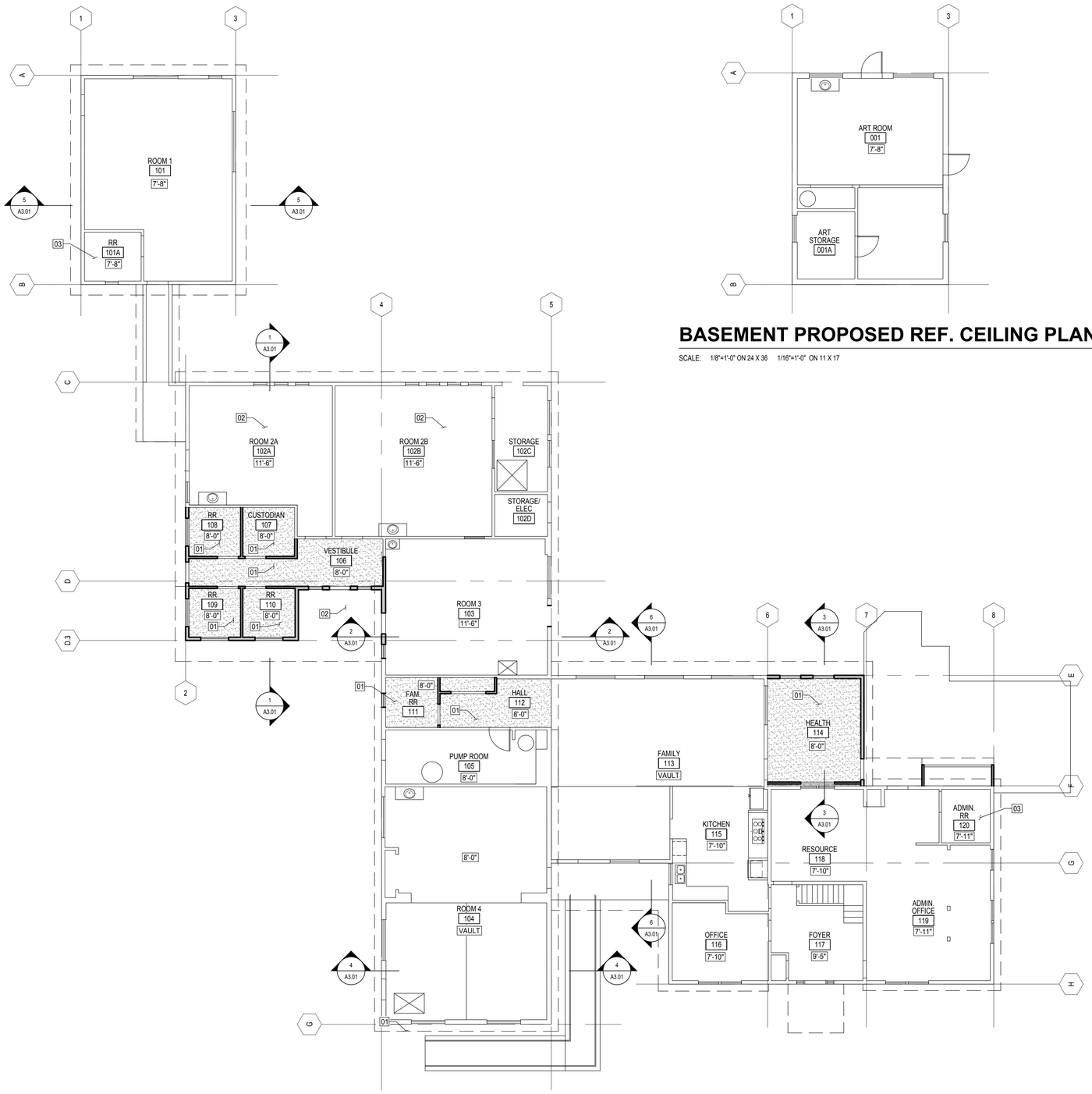

MAIN FLOOR PROPOSED REF. CEILING PLAN

1

SCALE: 1/8"=1'-0" ON 24 X 36 1/16"=1'-0" ON 11 X 17

N

0 5' 16'

BASEMENT PROPOSED REF. CEILING PLAN

3

SCALE: 1/8"=1'-0" ON 24 X 36 1/16"=1'-0" ON 11 X 17

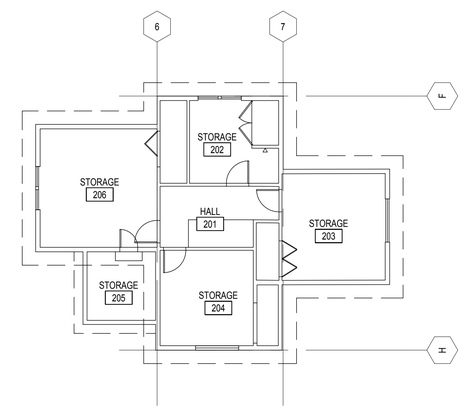

SECOND FLOOR PROPOSED REF. CEILING PLAN

2

SCALE: 1/8"=1'-0" ON 24 X 36 1/16"=1'-0" ON 11 X 17

PROPOSED REF. CEILING PLANS SHEET NOTES:

1. FIELD VERIFY ALL DIMENSIONS PRIOR TO COMMENCEMENT OF WORK.
2. HVAC UNITS AND DUCTWORK SHOW FOR REFERENCE ONLY. SEE MECH. DRAWINGS FOR FINAL LOCATION, UNIT SIZE, AND CURB REQUIREMENTS

PROPOSED REF. CEILING PLANS KEY NOTES:

01 NEW 1/2" GYP BD CEILING, MATCH EXISTING TEXTURE AND PAINT

02 NEW EXPOSED CEILING AT COVERED ENTRY PORCH, PAINT, MATCH EXISTING

03 EXISTING GYP BD CEILING, PATCH AND PAINT

WILLOW WIND RENOVATIONS

1497 E. MAIN ST.
ASHLAND, OR 97520

arkitek:
design and
architecture, llc.

426 a street
ashland, or 97520
tel.: 541.591.9988

REGISTERED ARCHITECT
CHRISTOPHER PLUMMER BROWN
6622
ASHLAND, OREGON
STATE OF OREGON

Revision	Date

Date	02/01/21
Job	20_10
Drawn By	DW
Checked By	
Scale	1/8"=1'-0"

100% DD

Drawing Title

PROPOSED REFLECTED CEILING PLANS

Drawing No.

A1.03

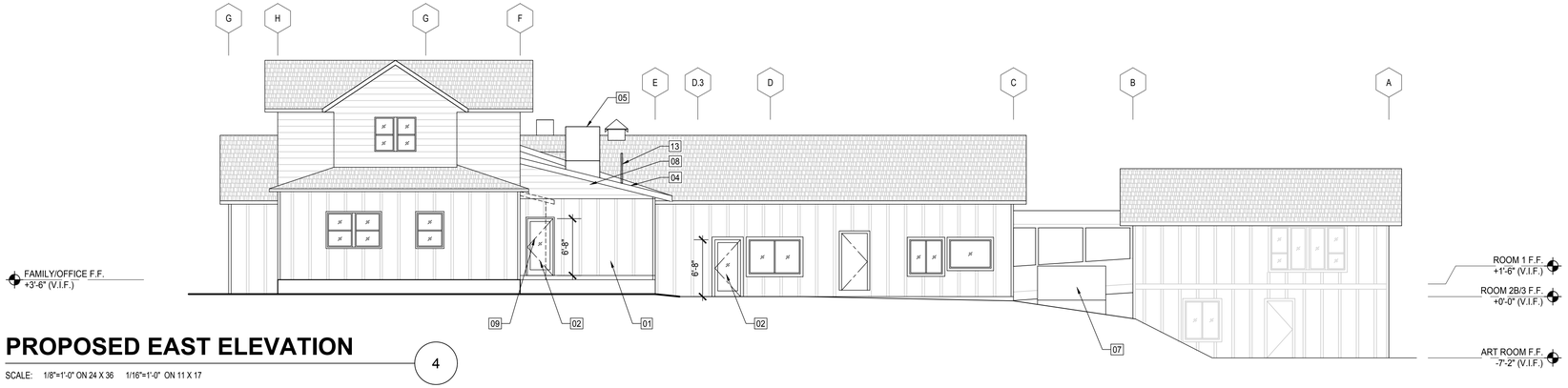

PROPOSED EAST ELEVATION

SCALE: 1/8"=1'-0" ON 24 X 36 1/16"=1'-0" ON 11 X 17

4

PROPOSED NORTH ELEVATION

SCALE: 1/8"=1'-0" ON 24 X 36 1/16"=1'-0" ON 11 X 17

3

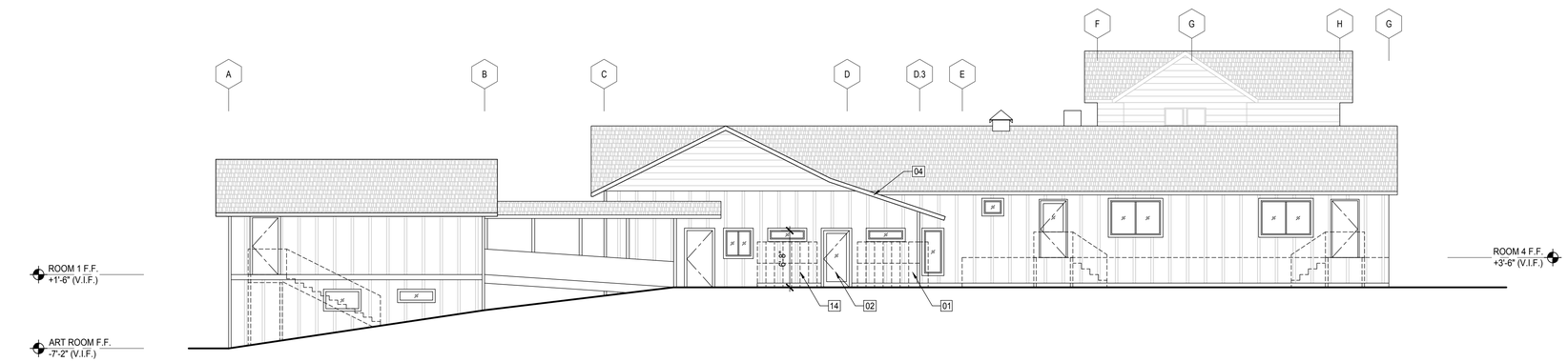

PROPOSED WEST ELEVATION

SCALE: 1/8"=1'-0" ON 24 X 36 1/16"=1'-0" ON 11 X 17

2

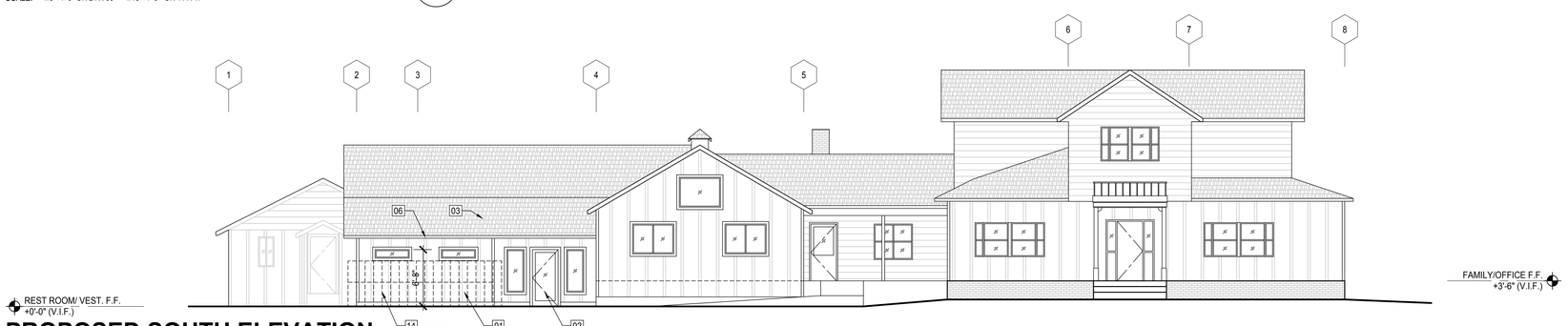

PROPOSED SOUTH ELEVATION

SCALE: 1/8"=1'-0" ON 24 X 36 1/16"=1'-0" ON 11 X 17

1

EXTERIOR ELEVATIONS SHEET NOTES:

1. FIELD VERIFY ALL DIMENSIONS PRIOR TO COMMENCEMENT OF WORK.
2. EXISTING DECK AT NEW HEALTH ROOM OMITTED FOR CLARITY.

EXTERIOR ELEVATIONS KEY NOTES:

01 NEW BOARD AND BATT SIDING, PAINT, MATCH EXISTING

02 NEW DOORS AND WINDOWS, SEE DOOR/ WINDOW SCHEDULE, MATCH EXISTING ADJACENT TRIM AND COLOR

03 NEW ASPHALT SHINGLE ROOFING AT ADDITION, MATCH EXISTING

04 NEW WOOD FASCIA, PAINT, MATCH EXISTING

05 NEW ROOF MOUNTED MECHANICAL UNIT, SEE MECH.

06 NEW CONT. METAL GUTTER W/ DOWNSPOUTS, MATCH EXISTING

07 NEW GROUND MOUNT MECHANICAL UNIT, SEE MECH., SCREEN FENCE OMITTED FOR CLARITY

08 NEW HORIZONTAL LAP SIDING AT ROOF GABLE END, PAINT, MATCH EXISTING

09 NEW LOST AND FOUND ALCOVE, MATCH EXISTING SIDING

10 NEW ALCOVE SCREEN WALLS, MATCH EXISTING SIDING

11 NEW ASPHALT ROOFING AT EXISTING WOOD AWNING, MATCH EXISTING

12 NEW ASPHALT ROOFING AT LOST AND FOUND ALCOVE, MATCH EXISTING

13 NEW 42" HIGH MECH. GUARD RAIL AT EACH MECH. UNIT, 2"X2" STEEL POST AT 6'-0" O.C. MAX, 2"X2" STEEL RAILS, 21" MAX OPENING SIZE, FLASH PER ROOF MFR., PAINT

14 NEW EXTERIOR 60" HIGH, TWO-TIER PHENOLIC CUBBIES W/ SLOPED TOP (SHOWN DASHED FOR CLARITY)

WILLOW WIND RENOVATIONS

1497 E. MAIN ST.
ASHLAND, OR 97520

arkitek:
design and architecture, llc.

426 a street
ashland, or 97520
tel.: 541.591.9988

REGISTERED ARCHITECT
CHRISTOPHER PLUMMER BROWN
6626
ASHLAND, OREGON
STATE OF OREGON

Revision	Date

Date	02/01/21
Job	20_10
Drawn By	DW
Checked By	
Scale	1/8"=1'-0"

100% DD

Drawing Title

PROPOSED EXTERIOR ELEVATIONS

Drawing No.

A2.01

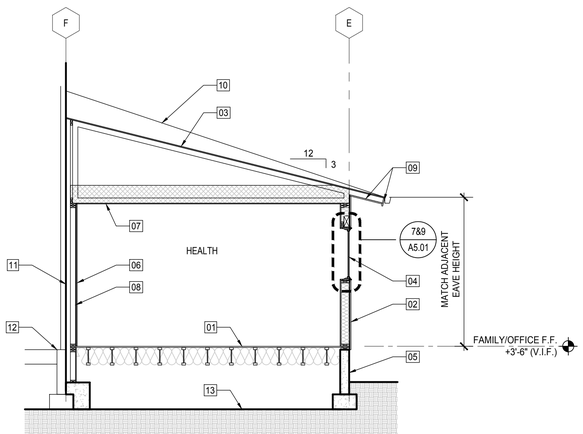

SECTION AT HEALTH ROOM

2

SCALE: 1/4"=1'-0" ON 24 X 36 1/8"=1'-0" ON 11 X 17

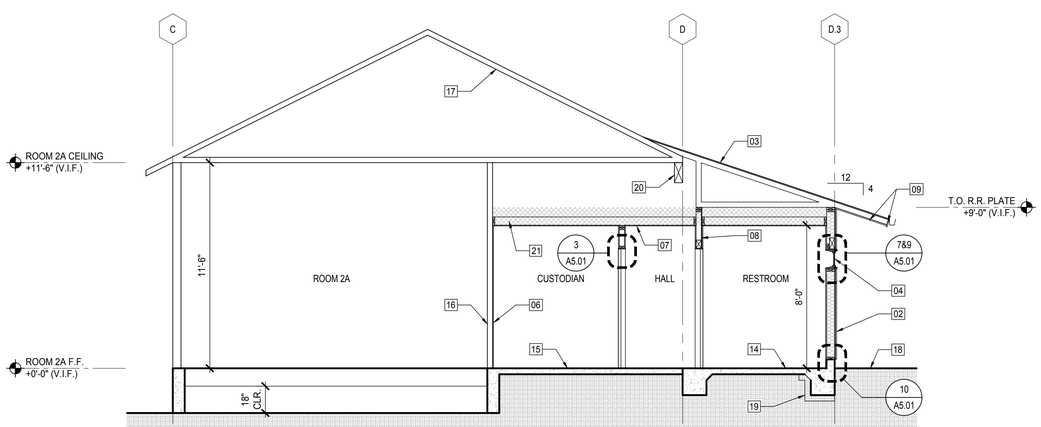

SECTION AT ROOM 2A/ RESTROOMS

1

SCALE: 1/4"=1'-0" ON 24 X 36 1/8"=1'-0" ON 11 X 17

SECTION SHEET NOTES:

1. FIELD VERIFY ALL DIMENSIONS PRIOR TO COMMENCEMENT OF WORK.
2. SEE STRUCTURAL DRAWINGS FOR ALL STRUCTURAL MEMBER SIZING.
3. SEE MECHANICAL DRAWINGS FOR ALL DUCTWORK AND EQUIPMENT.

SECTION KEY NOTES:

01 FLOORING O/ SHEATHING O/ FLOOR JST W/ R-30 BATT INSULATION
02 WALL TYPE 1, BOARD AND BATT SIDING O/ WRB O/ WALL SHEATHING O/ WALL FRAMING W/ R-21 BATT INSULATION
03 ASPHALT SHINGLE ROOF O/ ROOF UNDERLAYMENT O/ ROOF SHEATHING O/ PRE-ENGINEERED ROOF TRUSSES W/ R-49 BLOWN CELLULOSE INSULATION
04 ALU CLAD WOOD WINDOW
05 CONC. STEM WALL AND FOOTING
06 5/8" WALL GYP BD, TYP, TEXTURE AND PAINT
07 1/2" CEILING GYP BD, TYP, TEXTURE AND PAINT
08 SHEAR WALL SHEATHING O/ WALL FRAMING
09 NEW FASCIA, SOFFIT AND GUTTER, MATCH EXISTING
10 EXISTING ROOF BEYOND
11 FACE OF EXISTING BUILDING
12 EXISTING FOOTING AND FLOOR ASSEMBLY
13 6 MIL VAPOR BARRIER
14 FLOORING O/ CONC. SLAB O/ CONT. VAPOR BARRIER
15 FLOORING O/ EXISTING CONC. SLAB
16 EXISTING WALL
17 EXISTING ROOF TRUSS
18 PAVING, SEE LANDSCAPING
19 R-21 XPS RIGID INSULATION AT FIRSTS 24" OF NEW CONC. SLAB
20 NEW BEAM AT EXISTING TRUSS
21 2X6 CEILING FRAMING, TYP.

WILLOW WIND RENOVATIONS

1497 E. MAIN ST.
ASHLAND, OR 97520

arkitek:
design and architecture, llc.

426 a street
ashland, or 97520
tel.: 541.591.9988

REGISTERED ARCHITECT
CHRISTOPHER PLUMMER BROWN
6028
ASHLAND, OREGON
STATE OF OREGON

Revision		Date

Date	02/01/21
Job	20_10
Drawn By	DW
Checked By	
Scale	1/4"=1'-0"

100% DD

Drawing Title
PROPOSED SECTIONS

Drawing No.
A3.01

ENLARGED FLOOR PLANS/ INT. ELEV. SHEET NOTES:

1. FIELD VERIFY ALL DIMENSIONS PRIOR TO COMMENCEMENT OF WORK.
2. FIELD VERIFY EXTENT OF INTERIOR MODIFICATIONS.
3. ALL DIMENSION TO FACE OF STUD.
4. ALL FIXTURES AND ACCESSORIES TO BE ACCESSIBLE. SEE SHEET G2.00 FOR FIXTURE AND ACCESSORY MOUNTING DIMENSIONS.

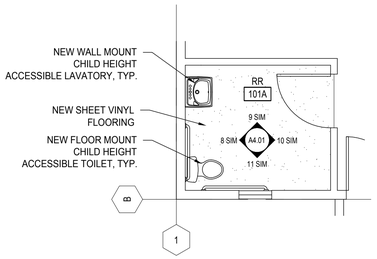

ENLARGED FLOOR PLAN AT ROOM 1 RESTROOM

SCALE: 1/4"=1'-0" ON 24 X 36 1/8"=1'-0" ON 11 X 17 — 16

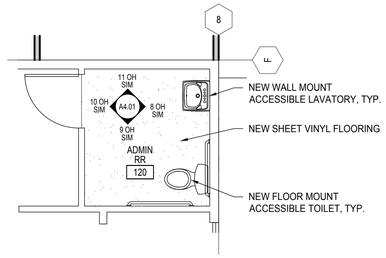

ENLARGED FLOOR PLAN AT ADMIN RESTROOM

SCALE: 1/4"=1'-0" ON 24 X 36 1/8"=1'-0" ON 11 X 17 — 17

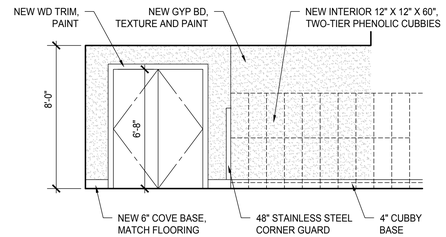

112 INT. ELEV. N

SCALE: 1/4"=1'-0" ON 24 X 36 1/8"=1'-0" ON 11 X 17 — 13

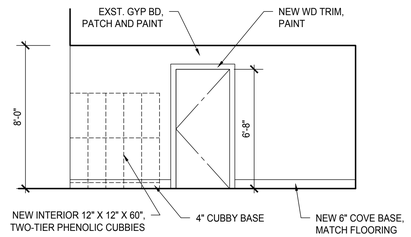

112 INT. ELEV. S

SCALE: 1/4"=1'-0" ON 24 X 36 1/8"=1'-0" ON 11 X 17 — 14

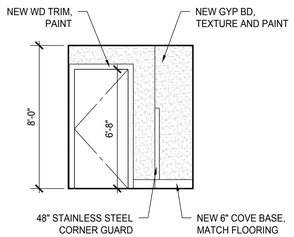

112 INT. ELEV. W

SCALE: 1/4"=1'-0" ON 24 X 36 1/8"=1'-0" ON 11 X 17 — 15

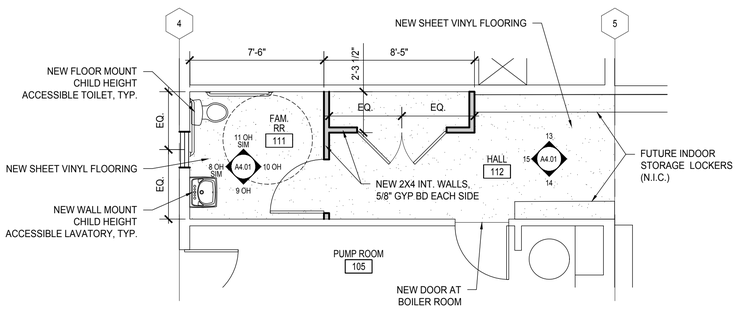

ENLARGED FLOOR PLAN AT FAMILY RESTROOM

SCALE: 1/4"=1'-0" ON 24 X 36 1/8"=1'-0" ON 11 X 17 — 12

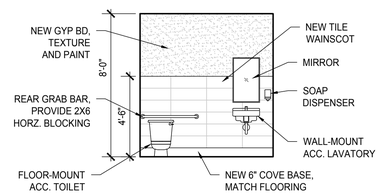

108 INT. ELEV. N

SCALE: 1/4"=1'-0" ON 24 X 36 1/8"=1'-0" ON 11 X 17 — 8

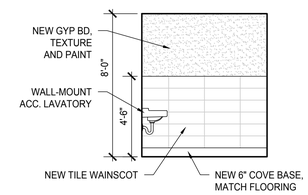

108 INT. ELEV. E

SCALE: 1/4"=1'-0" ON 24 X 36 1/8"=1'-0" ON 11 X 17 — 9

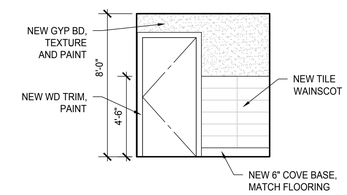

108 INT. ELEV. S

SCALE: 1/4"=1'-0" ON 24 X 36 1/8"=1'-0" ON 11 X 17 — 10

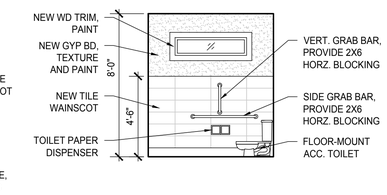

108 INT. ELEV. W

SCALE: 1/4"=1'-0" ON 24 X 36 1/8"=1'-0" ON 11 X 17 — 11

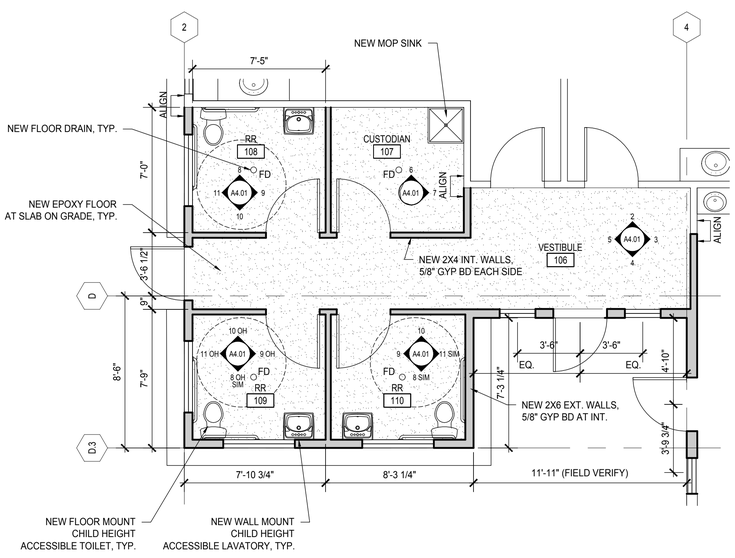

ENLARGED FLOOR PLAN AT RESTROOM ADDITION

SCALE: 1/4"=1'-0" ON 24 X 36 1/8"=1'-0" ON 11 X 17 — 1

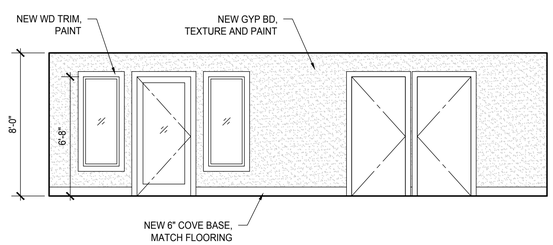

106 INT. ELEV. S

SCALE: 1/4"=1'-0" ON 24 X 36 1/8"=1'-0" ON 11 X 17 — 4

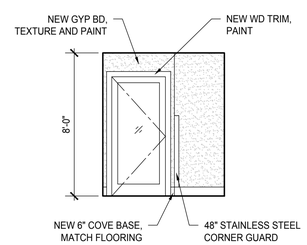

106 INT. ELEV. W

SCALE: 1/4"=1'-0" ON 24 X 36 1/8"=1'-0" ON 11 X 17 — 5

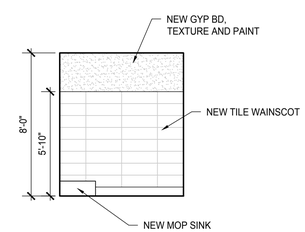

107 INT. ELEV. E

SCALE: 1/4"=1'-0" ON 24 X 36 1/8"=1'-0" ON 11 X 17 — 7

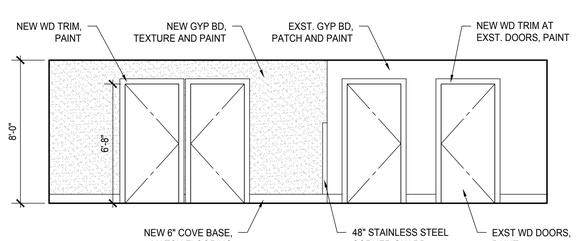

106 INT. ELEV. N

SCALE: 1/4"=1'-0" ON 24 X 36 1/8"=1'-0" ON 11 X 17 — 2

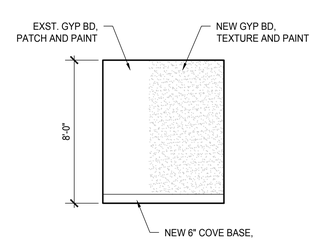

106 INT. ELEV. E

SCALE: 1/4"=1'-0" ON 24 X 36 1/8"=1'-0" ON 11 X 17 — 3

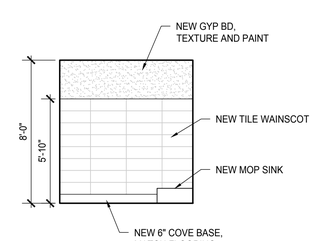

107 INT. ELEV. N

SCALE: 1/4"=1'-0" ON 24 X 36 1/8"=1'-0" ON 11 X 17 — 6

WILLOW WIND RENOVATIONS

1497 E. MAIN ST.
ASHLAND, OR 97520

arkitek:
design and architecture, llc.
426 a street
ashland, or 97520
tel.: 541.591.9988

REGISTERED ARCHITECT
CHRISTOPHER PLUMMER BROWN
6028
ASHLAND, OREGON
STATE OF OREGON

Revision	Date

Date	02/01/21
Job	20_10
Drawn By	DW
Checked By	
Scale	1/8"=1'-0"

100% DD

Drawing Title
ENLARGED FLOOR PLANS/ INTERIOR ELEVATIONS

Drawing No.
A4.01

ENLARGED FLOOR PLANS/ INT. ELEV. SHEET NOTES:

1. FIELD VERIFY ALL DIMENSIONS PRIOR TO COMMENCEMENT OF WORK.
2. FIELD VERIFY EXTENT OF INTERIOR MODIFICATIONS.
3. ALL DIMENSION TO FACE OF STUD.
4. ALL FIXTURES AND ACCESSORIES TO BE ACCESSIBLE. SEE SHEET G2.00 FOR FIXTURE AND ACCESSORY MOUNTING DIMENSIONS.

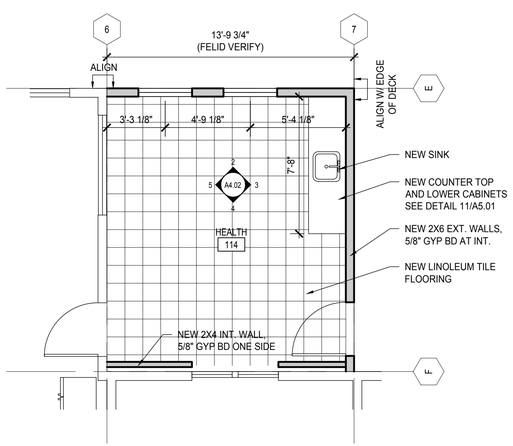

ENLARGED FLOOR PLAN AT HEALTH ROOM

SCALE: 1/4"=1'-0" ON 24 X 36 1/8"=1'-0" ON 11 X 17

1

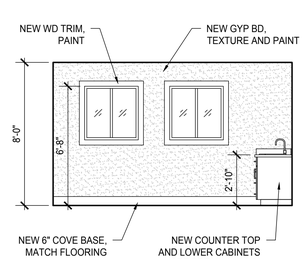

114 INT. ELEV. N

SCALE: 1/4"=1'-0" ON 24 X 36 1/8"=1'-0" ON 11 X 17

2

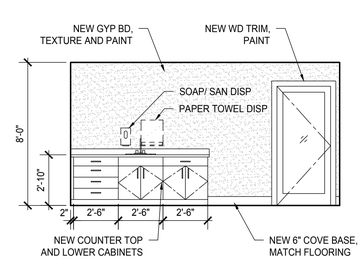

114 INT. ELEV. E

SCALE: 1/4"=1'-0" ON 24 X 36 1/8"=1'-0" ON 11 X 17

3

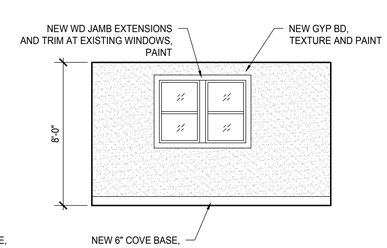

114 INT. ELEV. S

SCALE: 1/4"=1'-0" ON 24 X 36 1/8"=1'-0" ON 11 X 17

4

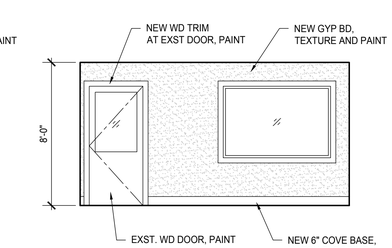

114 INT. ELEV. W

SCALE: 1/4"=1'-0" ON 24 X 36 1/8"=1'-0" ON 11 X 17

5

WILLOW WIND RENOVATIONS

1497 E. MAIN ST.
ASHLAND, OR 97520

arkitek:
design and architecture, llc.

426 a street
ashland, or 97520
tel.: 541.591.9988

REGISTERED ARCHITECT
CHRISTOPHER PLUMMER BROWN
6626
ASHLAND, OREGON
STATE OF OREGON

Revision		Date

Date	02/01/21
Job	20_10
Drawn By	DW
Checked By	
Scale	1/8"=1'-0"

100% DD

Drawing Title

ENLARGED FLOOR PLANS/ INTERIOR ELEVATIONS

Drawing No.

A4.02

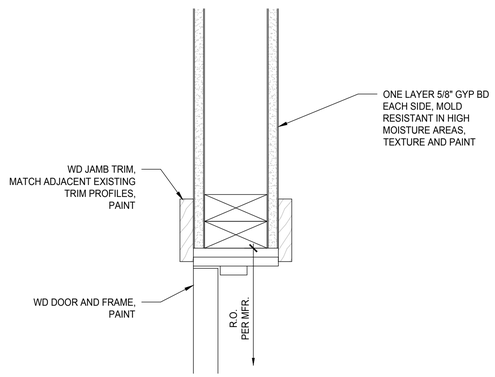

WOOD DOOR AT INT. 2X4 WALL JAMB (HEAD SIM)

SCALE: 3"=1'-0" ON 24 X 36 1 1/2"=1'-0" ON 11 X 17

3

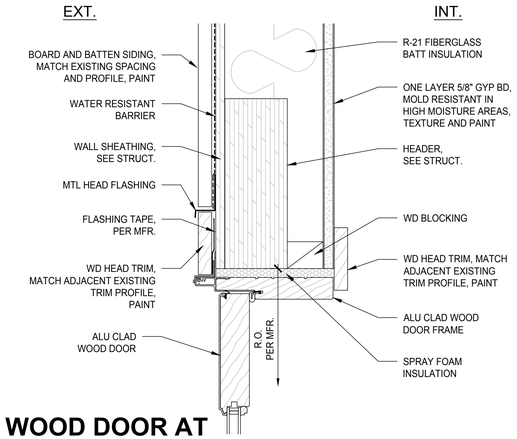

WOOD DOOR AT EXT. 2X6 WALL HEAD

SCALE: 3"=1'-0" ON 24 X 36 1 1/2"=1'-0" ON 11 X 17

6

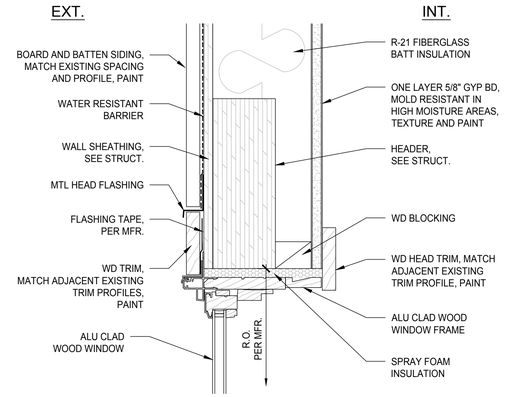

WOOD WINDOW AT EXT. 2X6 WALL HEAD

SCALE: 3"=1'-0" ON 24 X 36 1 1/2"=1'-0" ON 11 X 17

9

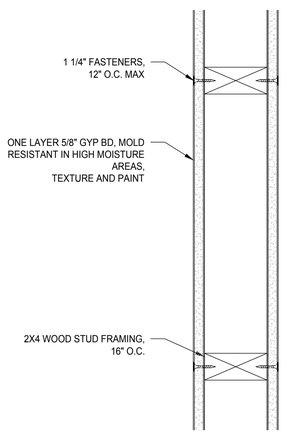

WALL TYPE 2 2X4 WOOD STUD INT. WALL PLAN

SCALE: 3"=1'-0" ON 24 X 36 1 1/2"=1'-0" ON 11 X 17

2

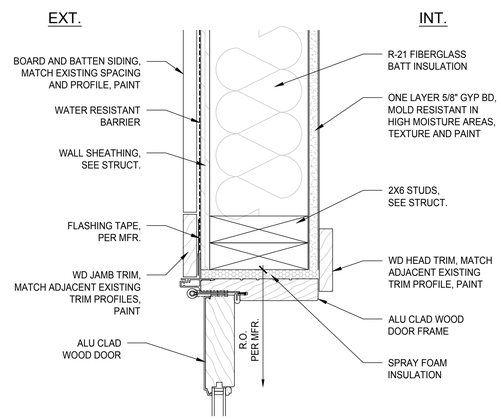

WOOD DOOR AT EXT. 2X6 WALL JAMB

SCALE: 3"=1'-0" ON 24 X 36 1 1/2"=1'-0" ON 11 X 17

5

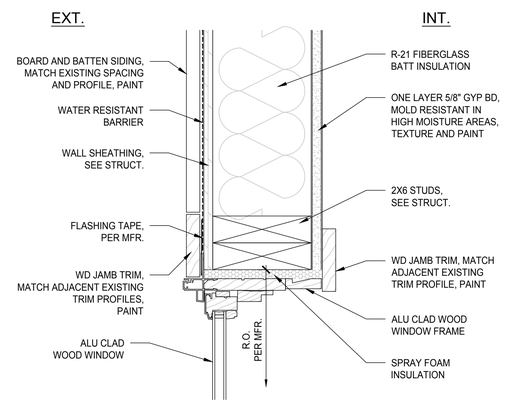

WOOD WINDOW AT EXT. 2X6 WALL JAMB

SCALE: 3"=1'-0" ON 24 X 36 1 1/2"=1'-0" ON 11 X 17

8

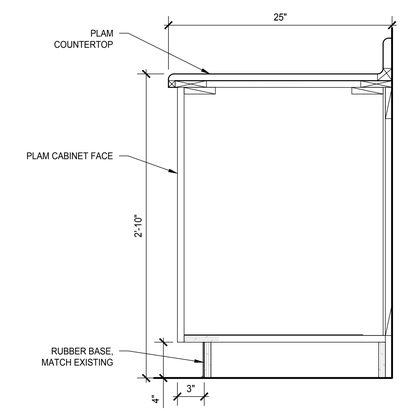

TYP. CASEWORK DETAIL

SCALE: 1 1/2"=1'-0" ON 24 X 36 3/4"=1'-0" ON 11 X 17

11

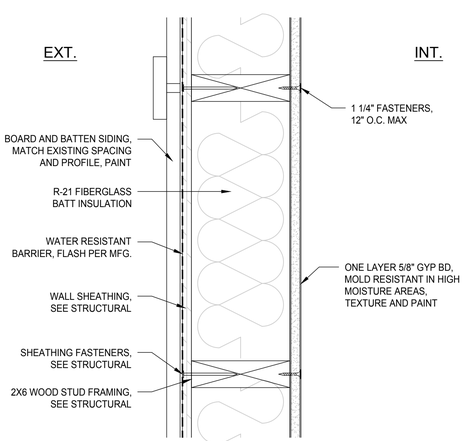

WALL TYPE 1 2X6 WOOD STUD EXT. WALL PLAN

SCALE: 3"=1'-0" ON 24 X 36 1 1/2"=1'-0" ON 11 X 17

1

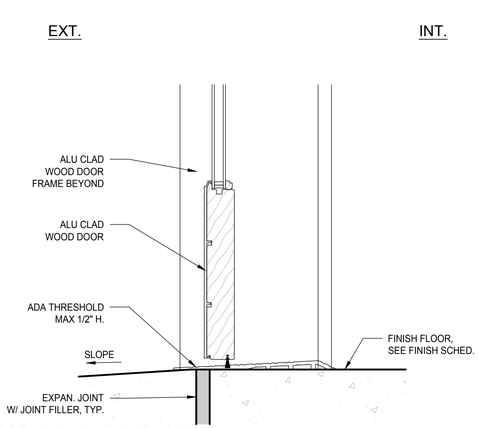

WOOD DOOR AT EXT. 2X6 WALL THRESHOLD

SCALE: 3"=1'-0" ON 24 X 36 1 1/2"=1'-0" ON 11 X 17

4

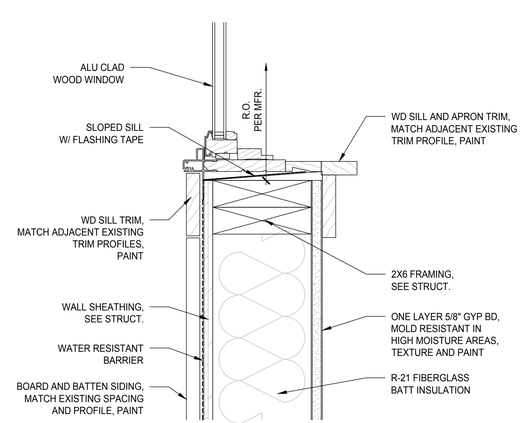

WOOD WINDOW AT EXT. 2X6 WALL SILL

SCALE: 3"=1'-0" ON 24 X 36 1 1/2"=1'-0" ON 11 X 17

7

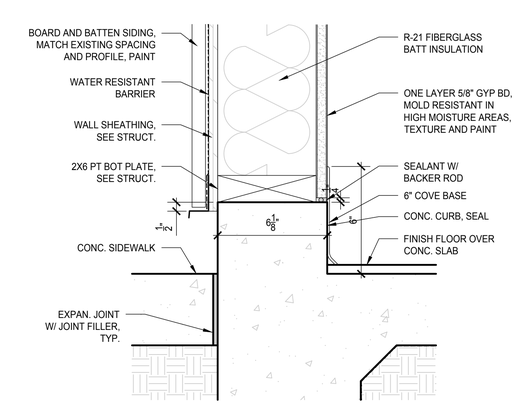

EXT. WOOD STUD WALL BASE AT EXT. PATIO

SCALE: 3"=1'-0" ON 24 X 36 1 1/2"=1'-0" ON 11 X 17

10

WILLOW WIND RENOVATIONS

1497 E. MAIN ST.
ASHLAND, OR 97520

arkitek:
design and architecture, llc.

426 a street
ashland, or 97520
tel.: 541.591.9988

REGISTERED ARCHITECT
CHRISTOPHER PLUMMER BROWN
6028
ASHLAND, OREGON
STATE OF OREGON

Revision	Date

Date	02/01/21
Job	20_10
Drawn By	DW
Checked By	
Scale	AS NOTED

100% DD

Drawing Title
DETAILS

Drawing No.
A5.01

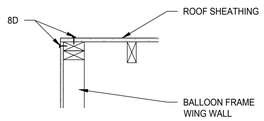

A

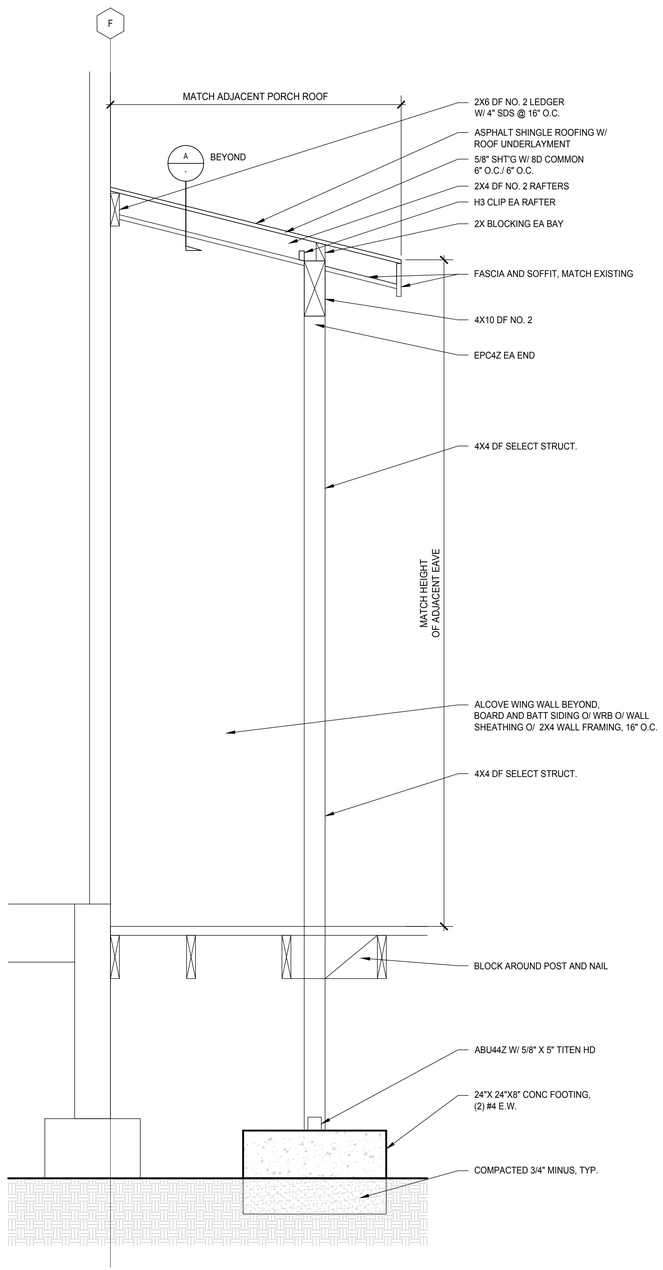

DETAILS AT LOST AND FOUND ALCOVE

1

SCALE: 1"=1'-0" ON 24 X 36 1/2"=1'-0" ON 11 X 17

WILLOW WIND RENOVATIONS

1497 E. MAIN ST.
ASHLAND, OR 97520

arkitek:
design and
architecture, llc.

426 a street
ashland, or 97520
tel.: 541.591.9988

REGISTERED ARCHITECT
CHRISTOPHER
PLUMMER BROWN
6028
ASHLAND, OREGON
STATE OF OREGON

Revision	Date

Date	02/01/21
Job	20_10
Drawn By	DW
Checked By	
Scale	AS NOTED

100% DD

Drawing Title
DETAILS

Drawing No.
A5.02

FINISH SCHEDULE

ROOM NO.	ROOM NAME	APROX. DIMS.	APROX. NET SQ. FT.	CEILING HEIGHT	FINISHES																NOTES
					FLOOR		BASE		NORTH WALL		EAST WALL		SOUTH WALL		WEST WALL		CEILING		WAINSCOT		
					MAT.	FIN.	MAT.	FIN.	MAT.	FIN.	MAT.	FIN.	MAT.	FIN.	MAT.	FIN.	MAT.	FIN.	MAT.	HEIGHT	
001	ART ROOM	20'-10" X 28'-9"	512	7'-8"	EXST.	-	EXST.	-	EXST.	-	EXST.	-	EXST.	-	EXST.	-	EXST.	-	-	-	-
001A	ART STORAGE	8'-3" X 9'-8"	80	7'-8"	EXST.	-	EXST.	-	EXST.	-	EXST.	-	EXST.	-	EXST.	-	EXST.	-	-	-	-
101	ROOM 1	21'-2" X 29'-0"	552	7'-8"	EXST.	-	EXST.	-	EXST.	-	EXST.	-	EXST.	-	EXST.	-	EXST.	-	-	-	-
101A	RESTROOM	8'-1" X 7'-0"	57	7'-8"	SHT. VINYL	-	VINYL	-	GYP BD	PAINT	GYP BD	PAINT	GYP BD	PAINT	GYP BD	PAINT	GYP BD	PAINT	TILE	4'-0"	RENOVATED RESTROOM, NEW TILE FLOOR AND WAINSCOT, PAINT WALLS AND CEILING
102A	ROOM 2A	20'-6" X 21'-7"	374	11'-6"	EXST.	-	EXST.	-	EXST.	-	EXST.	-	EXST.	-	EXST.	-	ACT	-	-	-	REPLACE DAMAGED ACOUSTIC CEILING TILES
102B	ROOM 2B	22'-1" X 21'-7"	485	11'-6"	EXST.	-	EXST.	-	EXST.	-	EXST.	-	EXST.	-	EXST.	-	ACT	-	-	-	REPLACE DAMAGED ACOUSTIC CEILING TILES
102C	STORAGE	7'-7" X 15'-2"	115	8'-0"	EXST.	-	EXST.	-	EXST.	-	EXST.	-	EXST.	-	EXST.	-	EXST.	-	-	-	-
102D	STORAGE/ ELECTRICAL	7'-7" X 6'-0"	45	8'-0"	EXST.	-	EXST.	-	EXST.	-	EXST.	-	EXST.	-	EXST.	-	EXST.	-	-	-	-
103	ROOM 103	23'-2" X 19'-6"	452	11'-6"	EXST.	-	EXST.	-	EXST.	-	EXST.	-	EXST.	-	EXST.	-	EXST.	-	-	-	-
104	ROOM 104	23'-2" X 33'-4"	774	8'-0"/ VAULT	EXST.	-	EXST.	-	EXST.	-	EXST.	-	EXST.	-	EXST.	-	EXST.	-	-	-	-
105	PUMP ROOM	7'-9" X 12'-6"	167	8'-0"	EXST.	-	EXST.	-	EXST.	-	EXST.	-	EXST.	-	EXST.	-	EXST.	-	-	-	-
106	VESTIBULE/ HALL	27'-10" X 6'-9"	146	8'-0"	EPOXY	-	EPOXY	-	GYP BD	PAINT	GYP BD	PAINT	GYP BD	PAINT	GYP BD	PAINT	GYP BD	PAINT	-	-	-
107	CUSTODIAN	7'-5" X 7'-0"	52	8'-0"	EPOXY	-	EPOXY	-	TILE/ GYP BD	-/ PAINT	TILE/ GYP BD	-/ PAINT	GYP BD	PAINT	GYP BD	PAINT	GYP BD	PAINT	TILE	6'-0"	-
108	RESTROOM	7'-5" X 7'-0"	52	8'-0"	EPOXY	-	EPOXY	-	TILE/ GYP BD	-/ PAINT	TILE/ GYP BD	-/ PAINT	TILE/ GYP BD	-/ PAINT	TILE/ GYP BD	-/ PAINT	GYP BD	PAINT	TILE	4'-0"	-
109	RESTROOM	7'-5" X 7'-0"	52	8'-0"	EPOXY	-	EPOXY	-	TILE/ GYP BD	-/ PAINT	TILE/ GYP BD	-/ PAINT	TILE/ GYP BD	-/ PAINT	TILE/ GYP BD	-/ PAINT	GYP BD	PAINT	TILE	4'-0"	-
110	RESTROOM	7'-6" X 7'-0"	53	8'-0"	EPOXY	-	EPOXY	-	TILE/ GYP BD	-/ PAINT	TILE/ GYP BD	-/ PAINT	TILE/ GYP BD	-/ PAINT	TILE/ GYP BD	-/ PAINT	GYP BD	PAINT	TILE	4'-0"	-
111	FAMILY RESTROOM	7'-6" X 7'-1"	54	8'-0"	SHT. VINYL	-	VINYL	-	TILE/ GYP BD	-/ PAINT	TILE/ GYP BD	-/ PAINT	TILE/ GYP BD	-/ PAINT	TILE/ GYP BD	-/ PAINT	GYP BD	PAINT	TILE	4'-0"	-
112	HALLWAY	16'-0" X 7'-0"	112	8'-0"	SHT. VINYL	-	VINYL	-	GYP BD	PAINT	GYP BD	PAINT	GYP BD	PAINT	GYP BD	PAINT	GYP BD	PAINT	-	-	-
113	FAMILY ROOM	30'-6" X 25'-11"	648	VAULT	EXST.	-	EXST.	-	EXST.	-	EXST.	-	EXST.	-	EXST.	-	EXST.	-	-	-	-
114	HEALTH	13'-4" X 15'-4"	205	8'-0"	LINOL. TILE	-	RES. BASE	BLACK	GYP BD	PAINT	GYP BD	PAINT	GYP BD	PAINT	GYP BD	PAINT	GYP BD	PAINT	-	-	-
115	KITCHEN	13'-7" X 17'-11"	233	7'-10"	EXST.	-	EXST.	-	EXST.	-	EXST.	-	EXST.	-	EXST.	-	EXST.	-	-	-	-
116	OFFICE	13'-10" X 11'-2"	114	7'-10"	EXST.	-	EXST.	-	EXST.	-	EXST.	-	EXST.	-	EXST.	-	EXST.	-	-	-	-
117	FOYER	13'-2" X 13'-9"	118	9'-5"	EXST.	-	EXST.	-	EXST.	-	EXST.	-	EXST.	-	EXST.	-	EXST.	-	-	-	-
118	RESOURCE ROOM	13'-3" X 13'-2"	180	7'-11"	EXST.	-	EXST.	-	EXST.	-	EXST.	-	EXST.	-	EXST.	-	EXST.	-	-	-	-
119	ADMIN OFFICE	17'-9" X 27'-5"	427	7'-11"	EXST.	-	EXST.	-	EXST.	-	EXST.	-	EXST.	-	EXST.	-	EXST.	-	-	-	-
120	ADMIN RESTROOM	7'-0" X 7'-7"	57	7'-11"	SHT. VINYL	-	VINYL	-	GYP BD	PAINT	GYP BD	PAINT	GYP BD	PAINT	GYP BD	PAINT	GYP BD	PAINT	TILE	4'-0"	RENOVATED RESTROOM, NEW TILE FLOOR AND WAINSCOT, PAINT WALLS AND CEILING
201	HALLWAY	13'-3" X 6'-10"	82	8'-0"	EXST.	-	EXST.	-	EXST.	-	EXST.	-	EXST.	-	EXST.	-	EXST.	-	-	-	-
202	STORAGE	9'-11" X 9'-3"	92	8'-0"	EXST.	-	EXST.	-	EXST.	-	EXST.	-	EXST.	-	EXST.	-	EXST.	-	-	-	-
203	STORAGE	14'-5" X 11'-11"	155	8'-0"	EXST.	-	EXST.	-	EXST.	-	EXST.	-	EXST.	-	EXST.	-	EXST.	-	-	-	-
204	STORAGE	13'-2" X 10'-8"	130	8'-0"	EXST.	-	EXST.	-	EXST.	-	EXST.	-	EXST.	-	EXST.	-	EXST.	-	-	-	-
205	STORAGE	7'-8" X 7'-8"	58	5'-0"	EXST.	-	EXST.	-	EXST.	-	EXST.	-	EXST.	-	EXST.	-	EXST.	-	-	-	-
206	STORAGE	16'-5" X 13'-3"	203	8'-0"	EXST.	-	EXST.	-	EXST.	-	EXST.	-	EXST.	-	EXST.	-	EXST.	-	-	-	-

FINISH SCHEDULE NOTES:

1. COORDINATE EXTENT OF PAINTING SCOPE WITH ARCHITECT AND DISTRICT.

DOOR SCHEDULE

SYMBOL	DOOR SIZE	QUAN.	DOOR				FRAME		FIRE RTNG.	HDWR GRP.	SIGN GRP.	DETAILS			REMARKS/ NOTES
			MAT.	TYPE	FIN.	GLAZ	MAT.	FIN.				TH'LD	JAMB	HEAD	
1	3'-0" X 6'-8"	1	WD	EXT FR LH IN	P	TEMP	WD	P	-	-	-	4/A5.01	5/A5.01	6/A5.01	INSWING FRENCH DOOR, FULL GLAZ.
2	3'-0" X 6'-8"	4	WD	EXT FR RH OUT	P	TEMP	WD	P	-	-	-	4/A5.01	5/A5.01	6/A5.01	OUTSWING FRENCH DOOR, FULL GLAZ.
3	3'-0" X 6'-8"	4	WD	INT LH	P	-	WD	P	-	-	-	-	3/A5.01	3/A5.01	INTERIOR DOOR
4	3'-0" X 6'-8"	2	WD	INT RH	P	-	WD	P	-	-	-	-	3/A5.01	3/A5.01	INTERIOR DOOR
5	5'-0" X 6'-8"	1	WD	DBL CLST	P	-	WD	P	-	-	-	-	3/A5.01	3/A5.01	INTERIOR DOUBLE CLOSET DOOR

WINDOW SCHEDULE

SYMBOL	WINDOW SIZE	QUAN.	MAT.	TYPE	FIN.	GLAZ	DETAILS			REMARKS/ NOTES
							SILL	JAMB	HEAD	
1	4'-0" X 1'-0"	4	WD	FXD	CLAD	TEMP	7/A5.01	8/A5.01	9/A5.01	PRIVACY GLASS
2	2'-0" X 5'-0"	3	WD	FXD	CLAD	TEMP	7/A5.01	8/A5.01	9/A5.01	-
3	2'-0" X 1'-6"	1	WD	FXD	CLAD	-	7/A5.01	8/A5.01	9/A5.01	-
4	3'-0" X 3'-0"	2	WD	SLD	CLAD	-	7/A5.01	8/A5.01	9/A5.01	-

DOOR/ WINDOW SCHEDULE NOTES:

1. FILED VERIFY SIZE AND OPERABILITY OF ALL WINDOWS AND DOOR PRIOR TO ORDERING.

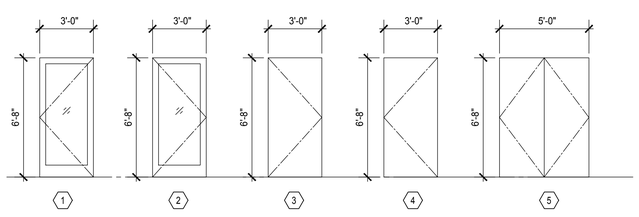

DOOR TYPES

SCALE: 1/4"=1'-0" ON 24 X 36 1/8"=1'-0" ON 11 X 17

1

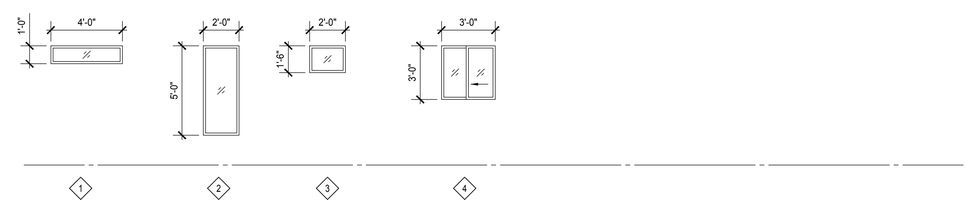

WINDOW TYPES

SCALE: 1/4"=1'-0" ON 24 X 36 1/8"=1'-0" ON 11 X 17

2

WILLOW WIND RENOVATIONS

1497 E. MAIN ST.
ASHLAND, OR 97520

arkitek:
design and
architecture, llc.

426 a street
ashland, or 97520
tel.: 541.591.9988

REGISTERED ARCHITECT
CHRISTOPHER PLUMMER BROWN
6028
ASHLAND, OREGON
STATE OF OREGON

Revision	Date

Date	02/01/21
Job	20_10
Drawn By	DW
Checked By	
Scale	

100% DD

Drawing Title
FINISH/ DOOR/ WINDOW SCHEDULES

Drawing No.
A6.01

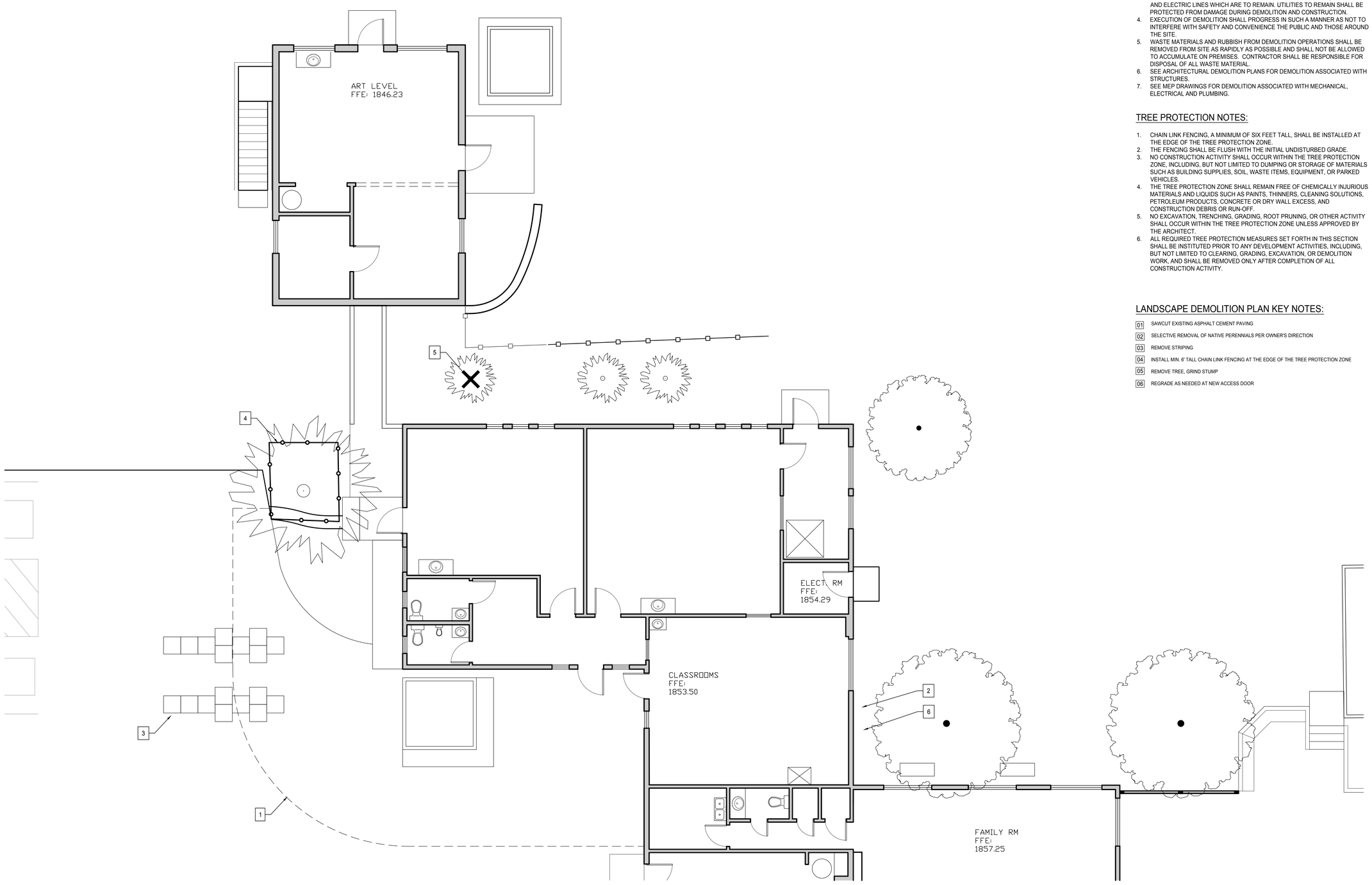

LANDSCAPE DEMOLITION PLAN

SCALE: 3/16"=1'-0" ON 24 X 36 3/32"=1'-0" ON 11 X 17

1

LANDSCAPE DEMOLITION PLAN SHEET NOTES:

1. THIS DRAWING IS ONLY TO ASSIST IN SHOWING SCOPE OF PROTECTION AND DEMOLITION WORK ASSOCIATED WITH TREES GREATER THAN 6" DBH.
2. NOT ALL LANDSCAPE ITEMS TO BE DEMOLISHED ARE SHOWN ON THE PLAN. CONTRACTOR SHALL BE RESPONSIBLE FOR PERFORMING A WALK-THRU OF THE SITE PRIOR TO BID AND CONSTRUCTION AND BECOMING FAMILIAR WITH ALL EXISTING CONDITIONS FOR THE PURPOSE OF IDENTIFYING POSSIBLE CRITICAL ITEMS, NOT ADDRESSED OR INCORRECTLY ADDRESSED, WHICH REQUIRE REMOVAL OR RELOCATION.
3. CONTRACTOR SHALL CHECK AND IDENTIFY ALL EXISTING WATER, SANITARY AND ELECTRIC LINES WHICH ARE TO REMAIN. UTILITIES TO REMAIN SHALL BE PROTECTED FROM DAMAGE DURING DEMOLITION AND CONSTRUCTION.
4. EXECUTION OF DEMOLITION SHALL PROGRESS IN SUCH A MANNER AS NOT TO INTERFERE WITH SAFETY AND CONVENIENCE THE PUBLIC AND THOSE AROUND THE SITE.
5. WASTE MATERIALS AND RUBBISH FROM DEMOLITION OPERATIONS SHALL BE REMOVED FROM SITE AS RAPIDLY AS POSSIBLE AND SHALL NOT BE ALLOWED TO ACCUMULATE ON PREMISES. CONTRACTOR SHALL BE RESPONSIBLE FOR DISPOSAL OF ALL WASTE MATERIAL.
6. SEE ARCHITECTURAL DEMOLITION PLANS FOR DEMOLITION ASSOCIATED WITH STRUCTURES.
7. SEE MEP DRAWINGS FOR DEMOLITION ASSOCIATED WITH MECHANICAL, ELECTRICAL AND PLUMBING.

TREE PROTECTION NOTES:

1. CHAIN LINK FENCING, A MINIMUM OF SIX FEET TALL, SHALL BE INSTALLED AT THE EDGE OF THE TREE PROTECTION ZONE.
2. THE FENCING SHALL BE FLUSH WITH THE INITIAL UNDISTURBED GRADE.
3. NO CONSTRUCTION ACTIVITY SHALL OCCUR WITHIN THE TREE PROTECTION ZONE, INCLUDING, BUT NOT LIMITED TO DUMPING OR STORAGE OF MATERIALS SUCH AS BUILDING SUPPLIES, SOIL, WASTE ITEMS, EQUIPMENT, OR PARKED VEHICLES.
4. THE TREE PROTECTION ZONE SHALL REMAIN FREE OF CHEMICALLY INJURIOUS MATERIALS AND LIQUIDS SUCH AS PAINTS, THINNERS, CLEANING SOLUTIONS, PETROLEUM PRODUCTS, CONCRETE OR DRY WALL EXCESS, AND CONSTRUCTION DEBRIS OR RUN-OFF.
5. NO EXCAVATION, TRENCHING, GRADING, ROOT PRUNING, OR OTHER ACTIVITY SHALL OCCUR WITHIN THE TREE PROTECTION ZONE UNLESS APPROVED BY THE ARCHITECT.
6. ALL REQUIRED TREE PROTECTION MEASURES SET FORTH IN THIS SECTION SHALL BE INSTITUTED PRIOR TO ANY DEVELOPMENT ACTIVITIES, INCLUDING, BUT NOT LIMITED TO CLEARING, GRADING, EXCAVATION, OR DEMOLITION WORK, AND SHALL BE REMOVED ONLY AFTER COMPLETION OF ALL CONSTRUCTION ACTIVITY.

LANDSCAPE DEMOLITION PLAN KEY NOTES:

01 SAWCUT EXISTING ASPHALT CEMENT PAVING

02 SELECTIVE REMOVAL OF NATIVE PERENNIALS PER OWNER'S DIRECTION

03 REMOVE STRIPING

04 INSTALL MIN. 6' TALL CHAIN LINK FENCING AT THE EDGE OF THE TREE PROTECTION ZONE

05 REMOVE TREE, GRIND STUMP

06 REGRADE AS NEEDED AT NEW ACCESS DOOR

WILLOW WIND RENOVATIONS

1497 E. MAIN ST.
ASHLAND, OR 97520

arkitek:
design and
architecture, llc.

426 a street
ashland, or 97520
tel.: 541.591.9988

REGISTERED ARCHITECT
CHRISTOPHER PLUMMER BROWN
6022
ASHLAND, OREGON
STATE OF OREGON

Revision	Date

Date	02/01/21
Job	20_10
Drawn By	JKA
Checked By	
Scale	3/16"=1'-0"

100% DD

Drawing Title

LANDSCAPE DEMOLITION PLAN

Drawing No.

L1

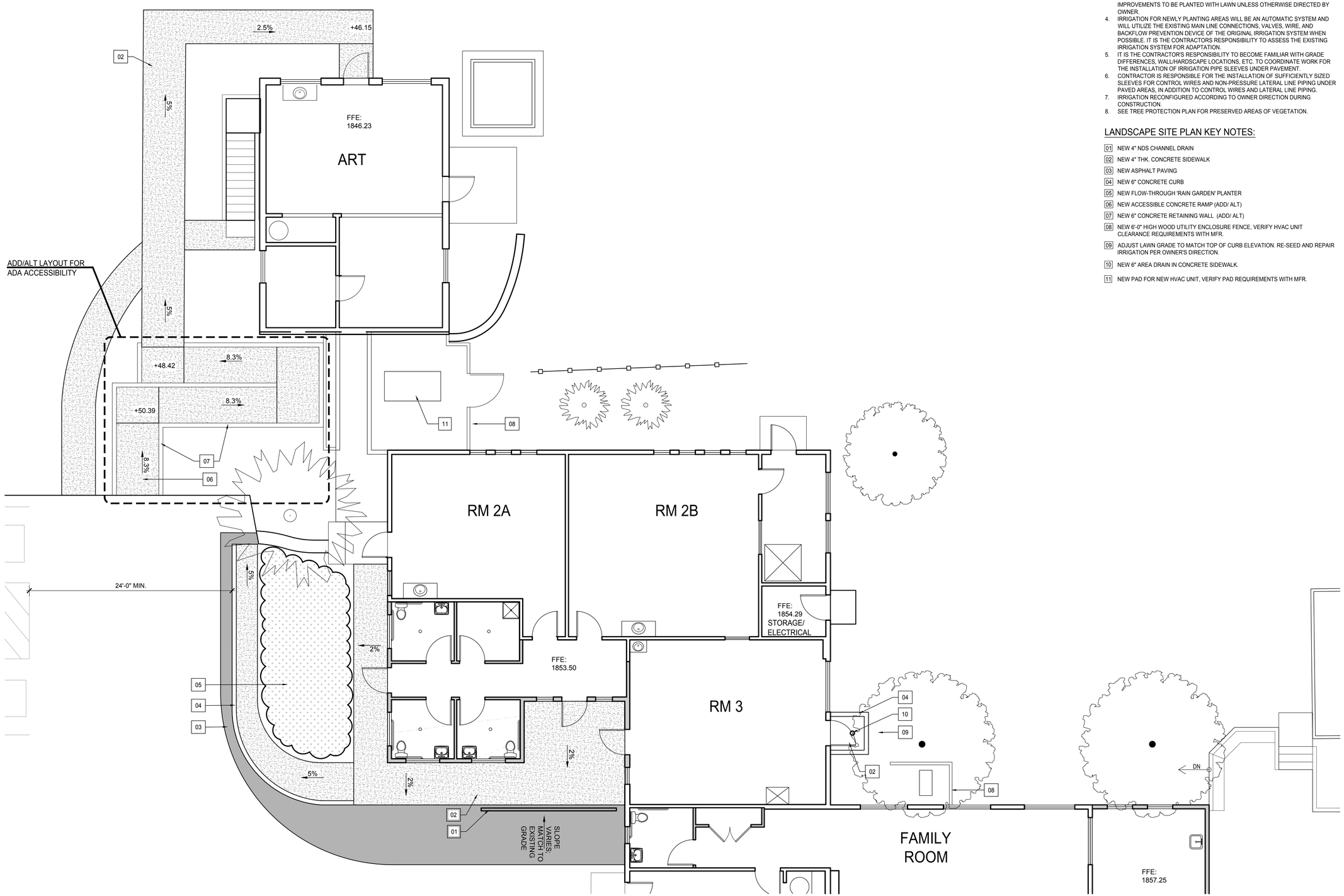

LANDSCAPE SITE PLAN

SCALE: 3/16"=1'-0" ON 24 X 36 3/32"=1'-0" ON 11 X 17

1

N

0 1' 5' 10'

LANDSCAPE SITE PLAN SHEET NOTES:

1. FIELD VERIFY ALL DIMENSIONS AND ELEVATIONS PRIOR TO COMMENCEMENT OF WORK.
2. VERIFY NEW HVAC UNITS PAD AND CLEARANCE REQUIREMENTS PRIOR TO FINAL SITING.
3. ALL AREAS DISTURBED BY CONSTRUCTION, SITE GRADING, AND SITE IMPROVEMENTS TO BE PLANTED WITH LAWN UNLESS OTHERWISE DIRECTED BY OWNER.
4. IRRIGATION FOR NEWLY PLANTING AREAS WILL BE AN AUTOMATIC SYSTEM AND WILL UTILIZE THE EXISTING MAIN LINE CONNECTIONS, VALVES, WIRE, AND BACKFLOW PREVENTION DEVICE OF THE ORIGINAL IRRIGATION SYSTEM WHEN POSSIBLE. IT IS THE CONTRACTORS RESPONSIBILITY TO ASSESS THE EXISTING IRRIGATION SYSTEM FOR ADAPTATION.
5. IT IS THE CONTRACTOR'S RESPONSIBILITY TO BECOME FAMILIAR WITH GRADE DIFFERENCES, WALL/HARDSCAPE LOCATIONS, ETC. TO COORDINATE WORK FOR THE INSTALLATION OF IRRIGATION PIPE SLEEVES UNDER PAVEMENT.
6. CONTRACTOR IS RESPONSIBLE FOR THE INSTALLATION OF SUFFICIENTLY SIZED SLEEVES FOR CONTROL WIRES AND NON-PRESSURE LATERAL LINE PIPING UNDER PAVED AREAS, IN ADDITION TO CONTROL WIRES AND LATERAL LINE PIPING.
7. IRRIGATION RECONFIGURED ACCORDING TO OWNER DIRECTION DURING CONSTRUCTION.
8. SEE TREE PROTECTION PLAN FOR PRESERVED AREAS OF VEGETATION.

LANDSCAPE SITE PLAN KEY NOTES:

01 NEW 4" NDS CHANNEL DRAIN

02 NEW 4" THK. CONCRETE SIDEWALK

03 NEW ASPHALT PAVING

04 NEW 6" CONCRETE CURB

05 NEW FLOW-THROUGH 'RAIN GARDEN' PLANTER

06 NEW ACCESSIBLE CONCRETE RAMP (ADD/ ALT)

07 NEW 6" CONCRETE RETAINING WALL (ADD/ ALT)

08 NEW 6'-0" HIGH WOOD UTILITY ENCLOSURE FENCE, VERIFY HVAC UNIT CLEARANCE REQUIREMENTS WITH MFR.

09 ADJUST LAWN GRADE TO MATCH TOP OF CURB ELEVATION. RE-SEED AND REPAIR IRRIGATION PER OWNER'S DIRECTION.

10 NEW 6" AREA DRAIN IN CONCRETE SIDEWALK.

11 NEW PAD FOR NEW HVAC UNIT, VERIFY PAD REQUIREMENTS WITH MFR.

WILLOW WIND RENOVATIONS

1497 E. MAIN ST.
ASHLAND, OR 97520

arkitek:
design and
architecture, llc.

426 a street
ashland, or 97520
tel.: 541.591.9988

REGISTERED ARCHITECT
CHRISTOPHER PLUMMER BROWN
6692
ASHLAND, OREGON
STATE OF OREGON

Revision	Date

Date	02/01/21
Job	20_10
Drawn By	JKA
Checked By	
Scale	3/16"=1'-0"

100% DD

Drawing Title

LANDSCAPE SITE PLAN

Drawing No.

L2

GENERAL NOTES

GENERAL REQUIREMENTS:

1. Codes and Standards: all materials and work shall conform to the 2014 OSSC and 2018 International Building Code (IBC) and the ASCE7-16 Minimum Design Loads for Buildings and Other Structures.
2. Conflicts: notes and details on the drawings take precedence over the general notes and typical details in case of conflict.
3. Verification: verify all dimensions, elevations and site conditions before starting work. Notify the engineer of record of any discrepancies.
4. Substitutions: provide manufacturer's approved product evaluation reports, ICBO reports and a list of all proposed substitutions to the engineer for review and written approval before fabrication or use.
5. Similar Work: where construction details are not shown or noted for any part of the work, such details shall be the same as for similar work shown on the drawings.
6. Pipes, ducts, sleeves, chases, etc.: shall not be placed in slabs, beams, or walls unless specifically shown or noted nor shall any structural member be cut for pipes, ducts, etc., unless specifically shown. Obtain prior written approval for installation of any additional pipes, ducts, etc.
7. Excavations: locate and protect underground or concealed conduit, plumbing or other utilities where new work is being performed.
8. Construction loads: materials shall be evenly distributed if placed on framed floors or roofs. Loads shall not exceed the allowable loading for the supporting members and their connections.
9. Construction methods and project safety: the contract drawings and specifications represent the finished structure and do not indicate methods, procedures or sequence of construction. Take necessary precautions to maintain and insure the integrity of the structure during construction. Neither the owner nor architect/engineer will enforce safety measures or regulations. Contractor shall design, construct and maintain all safety devices, including shoring and bracing, and shall be solely responsible for conforming to all local, state and federal safety and health standards, laws and regulations.
10. Changes to the drawings: obtain prior written approval from the engineer of record.

DESIGN CRITERIA

1. Gravity Loads:
   a. Dead Loads:
      Roof = 15 psf
      Main Floor = 15 psf
   b. Live Loads:
      Roof = 25 psf (design roof snow load) I=1.10
      Main Floor= 40 psf (classroom), 50 psf (office)
2. Wind Loads:
   a. Basic Design Velocity = 101 mph
   b. Risk Category = III
   c. Exposure category = C
   d. Internal Pressure coefficient (GCpi) = +/-0.18 (enclosed)
3. Seismic Design Criteria:
   a. Risk Category III
   b. Importance factor = 1.25
   c. Mapped spectral response coefficients: Sds=0.523g
   d. Seismic design category/Site Class = D
   e. Basic seismic force resisting system = wood shear walls.
   f. Response Modification Factor (R) = 6.5

FOUNDATION

1. Geotechnical Engineering is required with all expenses paid for by owner. Requirements may include all building pad, footing and slab subgrade preparation and fill material and subgrade verification for bearing capacity.
2. Entire building pad and footing subgrades shall be prepared for building foundation per Geotech Report. Footings shall bear on approved native soil or on approved compacted structural fill. Slabs shall be installed over a minimum of 6" of compacted 3/4" clean crushed rock.
3. Founding of footings and slabs: shall be on dense granular alluvial native soil or approved compacted structural fill. Remove all loose fill and expansive clay. See geotech report
4. Soil Pressures:
   Bearing on struct fill over sandstone native materials = 1500 psf
   Coefficient of friction.....0.45
   Passive pressure = 400 pcf
   Active pressure non-restrained = 45 pcf
5. Compaction reports shall be sent to the Architect and Engineer.
6. Roof and area drainage: shall be directed away from the foundations.
7. Backfill: backfill for walls shall be pervious, granular, free-draining material directly behind wall and as outlined in soils report. Do not place backfill behind walls before they have attained their design strength. Shore and protect walls from lateral loads until the supporting members are in place and have developed specified strengths.
8. Center footing on walls or column unless otherwise noted on the drawings.
9. Foundation drains adjacent to retaining walls shall be installed to drain to daylight or tie into storm drains as permitted.
10. Do not excavate closer than 2:1 slope below footing excavations.
11. Clean all footing excavations of loose material by hand. Remove all wet and soft soil form footing excavations prior to placing concrete.

REINFORCED CONCRETE

1. Materials:
   Cement: ASTM C-150 type [II]
   Aggregate: ASTM C-33 [standard weight]
   Reinforcement: ASTM A-615 grade [60] typical
   Anchor bolts: ASTM A-36 hooked anchor bolts
   Washers: 3" square plate washer with standard nut
   Anchor bolts: ASTM A-307 headed machine bolts
2. Average concrete strength to be as indicated below and determined by job cast, lab cured cylinder at 28 days plus increase depending on plant's standard deviation as specified in ACI 318. Provide mix designs to engineer (when required) for review prior to placing any concrete. CLEARLY LABEL ALL MIX DESIGNS AS TO PROPOSED AREA OF USE. Supplier to label all mix designs with and identification number. Mix number should be referenced in all subsequent concrete test reports.

SUBMIT MIX DESIGN TO ARCHITECT/E.O.R.

Location	Compressive strength (psi)	Slump (a)	Notes
Footings	3000	3-4"	(b),(d)
Slabs on grade (Interior)	3500	2-4"	(b),(d)
Slabs on grade (exterior)	4000	2-4"	(b),(c),(d)
Foundation Walls	3000	5.5"-6.5"	(b), (d)

   a. Slump exceeding specified limit shall not be placed, except with written approval from engineer.
   b. WRA = water reducing admixture.
   c. AE = air entrainment.
   d. Provide an accelerator in all concrete placed below 50 degrees.
3. Use type I cement per ASTM C-150. Water cement ratio shall be 0.50 maximum for all slabs on grade, walls and precast columns. W/C ratio shall be 0.5 maximum for all other concrete. Fly ash meeting ASTM C618 may be substituted for up to 15% of the cement content in all mixes.
4. Water reducing agents shall comply with ASTM C-494.
5. Air entrainment shall comply with ASTM C-260. Provide 3-5% when specified.
6. Accelerators: dosage to be determined by contractor.
7. Calcium chloride shall not be used in any concrete, for any purpose on the project.

Quality Control:

A. Compression tests: (when required) contractor shall, at the contractors expense, have test cylinders made in accordance with ASTM C-31, latest edition. Four test cylinders shall be made for each strength of concrete placed on any one day and at least four test cylinders for each 100 cubic yards. All test cylinders shall be laboratory cured. Each group of four cylinders, two shall be broken at 7 days and two at 28 days, except the contractor may at his option break one of the two test cylinders at 42 days instead.

B. Slump tests: (when required) the contractor shall at the contractors expense have 1 slump test taken per each of the four cylinders. Measure slump in accordance with ASTM C-143 latest edition. If a super plasticizer water reducing agent is used, no slump tests are required.

C. A copy of the compression and slump test results shall be sent to the engineer of record.

D. Pipes, sleeves and ducts: not to be placed in walls, beams, slabs, footings or columns unless specifically detailed.

E. Chamfer: [3/4] inch on exposed corners.

F. Concrete design mix shall be reviewed by the engineer. Calcium chloride or added chlorides are not permitted.

G. Construction joints: ACI 117.9 & 6.4, quarter inch amplitude minimum or keyed joints per plan. Location of joints to be reviewed by the engineer. Wait 48 hours between pours.

H. Slab on Grade joints: location of all construction, control and weakened plane joints not specifically indicated on the drawings shall be reviewed by the engineer prior to the placing of reinforcement. Maximum spacing of joints shall be 15 feet on center. Install within 12 hours of concrete placement.

I. Actual dimensions: slab, wall, beam and column dimensions shown are actual dimensions not nominal dimensions (i.e. 4" slab is 4" thick, not 3 $\frac{1}{2}$" thick)

J. Concrete curing: ACI 318

K. Vibration: all concrete 12" and deeper shall be consolidated with mechanical vibrators.

L. The contractor shall provide and install all cast in inserts as required to a complet job.

M. Non shrink grout shall be non-metallic, non-shrink grout conforming to requirements of ASTM C-1107, type B or C, with an ASTM C-109 compressive strength of 5000 psi at 7 days. Acceptable products are Masterflow 928 and Five Star Grout or approved equal.

N. Concrete Placement and curing:

a) Concrete placement shall be performed in conformance with ACI 301. Cure concrete with water for atleast 14 days. All other curing methods shall be submitted to the engineer for approval. All methods are the responsibility of the general contractor. The contractor agrees to replace improperly placed and cured concrete.

b) Contractor shall protect concrete against hot and cold weather.

c) In cold weather, concrete shall be maintained above 50 degrees F for a minimum of 7 days after placement.

d) In hot weather above 85 degrees, concrete shall be kept moisture cured by keeping continuously wet.

REINFORCEMENT

1. Detailing, fabrication and placing: shall conform to ACI 315 and ACI 318.
2. Minimum concrete cover:
   A. Cast against and exposed to earth = 3"
   B. Exposed to earth or weather = 2"
   C. Not exposed to weather or in contact with ground:
      Slabs, walls, joists = 3/4"
      Beams, columns (ties, stirrups, spirals) = 1 1/2"
3. Chairs, spacers and sand plates: as required to maintain concrete cover.
4. All welded wire mesh shall be furnished in flat sheets supported on bolsters and conform to ASTM A-185.
5. Provide corner bars same size and spacing as horizontal bars and project laps per rebar schedule.
6. Provide (2) #5 bars around all openings and recesses. Extend these bars 24" beyond the corner of the openings.
7. Vertical Reinforcement: shall be doweled to supporting members with the same size and spacing of reinforcement as shown in the drawings and general notes.
8. Spacing: clear distance between parallel reinforcement in a layer shall not be less than 1 1/2 times the nominal diameter of the reinforcement, or 1 1/3 times maximum size aggregate, nor less than 1 1/2".
9. Tack welding, welding, heating or cutting of bars: not permitted (U.N.O.)
10. Slab corners: provide two #4 X 4'-0" at re-entrant corners and each corner of rectangular holes in slabs. Place bars diagonally.
11. Splices (standard laps): 40 diameters or 24 inches whichever is greater unless noted on plans. Stagger bottom splices at least 5'-0" from splices in other bottom reinforcement. Stagger splices for top reinforcement similarly.
12. Anchor bolts, dowels and hold down anchors: securely held in place prior to foundation inspection by the building official and obervations by the engineer.
13. All wall reinforcement to be placed in middle of wall unless otherwise noted or detailed in the plans.
14. (When required) Provide shop drawings of all reinforced concrete items to Architect of record for review prior to construction of these items.
15. Where welding of reinforcing is specified, bars shall conform to ASTM 706. Do not weld reinforcing unless specified by the design.

DRILLED ANCHORS

1. Install in strict accordance with ICBO report and manufacturer's instructions, including hole clean out procedures, drill bit diameters, embedment, minimum spacing and edge distance to obtain maximum capacity.
2. Contact engineer to relocate if existing cracks or reinforcing is encountered where anchor is to be placed.
3. Epoxy adhesive anchors: Rawl or Simpson or equal.

Prefabricated pre-engineered wood trusses

1. Codes and fabrication: manufacturer's approved ICBO product evaluation reports.
2. Grade stamped douglas fir/larch no. 2 or better.
3. Design requirements: 2x4 min TOP CHORD MNFR SHALL CONSIDER OVERHANG LOADS
   A) Roof: Dead load bottom chord.....10 psf
   Dead load (top/btm chord).....15 psf
   Live load (Snow load) top chord.....25 psf
   Total Load Deflection 1/240
4. Calculations & shop dwgs that include plans that locate ea engineered truss: Submit for review, shop drawings and calculations by an engineer, for the design loads, including maximum reaction, shear, moment, and deflection in comparison to the allowables. Size the top chord for the diaphragm nailing and a [2x] minimum nominal width. The trusses shown on the dwgs are preliminary and may require size or spacing modifications. See arch for truss config. Submit to engineer to allow for review.
5. Blocking, bracing and bridging: as required by the manufacturer's approved product evaluation reports, the IBC, ICBO approvals, the calculations and the drawings.

WOOD STRUCTURAL PANEL(S) - APA RATED

1. References: PS1, PS2, APA standard PRP-108, national evaluation service report NER-108 and ICBO report 1452.
2. Wall panels: [OSB] C-D ext glue, 7/16" identification 24/16.
3. Roof panels: Plywood C-D ext glue, 5/8" identification 40/20.
4. Floor panels: Plywood C-D ext glue, 3/4" T&G identification 48/24.
5. Blocking:
A. Walls: all unsupported panel joints shall be blocked solid with 2x blocking.
B. Floors & Roofs: where noted on the drawings, all unsupported panel joints shall be blocked solid with 2x4 flat blocking.
6. Nailing: common wire nails. Panel nails shall be driven so that the heads are flush with the surface of the panel. Field nailing (FN) shall be 12" on center and the minimum panel edge distances shall be maintained.
7. Machine nailing: subject to a satisfactory job site demonstration for this project and review by the engineer. The use of machine nailing is subject to continued satisfactory performance. Panel nails shall be driven so that the heads are flush with the surface of the panel and the minimum panel edge distance are maintained.
8. Glued floors: field glue to all supports and T & G edges per APA, AFG-01. Framing shall be free of surface moisture & debris prior to gluing.

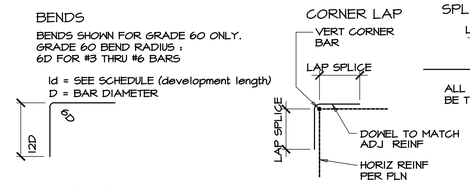

LAP SPLICE SCHED (U.N.O. ON PLAN)	3,000/4,000 PSI CONC
Bars	LAP (UON)
#3	24
#4	24
#5	27
#6	33

1 REBAR SCHEDULE

Scale: NTS

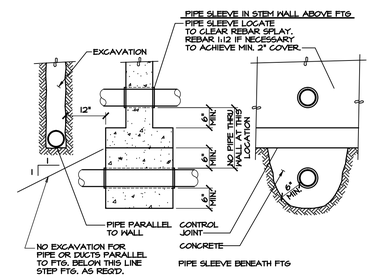

2 PIPE SLEEVE (TYP)

Scale: NTS

COLD JOINTS:
CONTRACTOR SHALL INSTALL COLD JOINTS BETWEEN CONCRETE POURS AS REQ'D.

SAW JOINTS: LOCATIONS BY CONTRACTOR
INSTALL INTERIOR CONCRETE SLAB SAW JOINTS AT MAX. 10'-0" OC EA. WAY. SEE SHEET S1

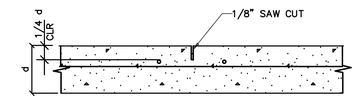

OPTIONAL SAWN JOINTS:
JOINT DEPTH AT 1/5 OF SLAB DEPTH. SAWING TO OCCUR AS SOON AS CONCRETE CAN BE SAWN WITHOUT SPALLING WITHIN 12 HOURS OF CONC PLACEMENT

WET SAW JOINT (S.J.)

3 CONCRETE SLAB

Scale: NTS

WOOD

1. Grade stamped Douglas Fir-Larch No.2 unless otherwise noted on the plans (see lumber grades in schedules).
2. Laminated Veneer Lumber: Beams to be built in accordance with "Standard Specifications" for members of the American Institute of "Timber Construction".
3. Nails: common wire unless otherwise noted. Edge or end distances in the direction of stress shall not be less than one half of the required penetration. The center to center spacing of nails in the direction of stress shall not be less than the required penetration. Holes for nails, where necessary to prevent splitting, shall be bored to a diameter smaller than that of the nail.
4. Anchor bolts (foundation anchor bolts): provide 5/8" diameter anchor or machine bolts with a minimum of 7 inch embedment into the concrete within 12 inches of each end of each plate. Space anchors at 48 inches on center u.o.n. Anchors shall be located a maximum of 2 inches from the face of stud receiving wood structural panels. Anchor bolt holes shall be 1/32" to 1/16" inch larger than the anchor bolt diameter. Holes more than 1/16" larger than the anchor bolt shall be epoxy filled under the continuous supervision of a licensed special inspector per specifications.
5. Bolts: not less than 7 bolt diameters from the end and 4 diameters from the edge of the member. Bolt holes shall be 1/32" to 1/16" larger than the bolt diameter. All nuts shall be tightened when installed and re-tightened at the completion of work or before closing in. Thread projection shall be $\frac{1}{4}$" minimum beyond the nut. Bolts in specified slotted holes shall be centered in the slot, u.n.o.
6. Lag screw clearance and lead holes shall be bored as follows: the clearance hole for the shank shall have the same diameter as the shank, and the same depth of penetration as the length of unthreaded shank. The lead hole for the threaded portion shall have a diameter equal to 50-75% of the shank diameter and a length equal to at least the length of the threaded portion.
7. Steel plate washers (pw): anchor bolts, bolts, lags and nuts, shall have steel plate washers.
8. Framing connectors: per manufacturer's approved product evaluation reports, ICBO approved and installed accordingly. Size and number of nails to be maximum specified by the manufacturer, u.n.o.
9. Nailed/Screwed hold down anchors: install per manufacturer's approved ICBO product evaluation report. Install hold downs 1/2" minimum above the plate to allow for tightening of anchor bolt. The hold down shall be installed tight to the hold down post without fillers or dapping. Do not bend hold down anchors.
10. Bolted hold down anchors: install per manufacturer's approved ICBO product evaluation reports. Install hold downs 1/2" minimum above the plate to allow for tightening anchor bolt. Tighten hold down anchor before tightening post bolts. Use extra care in boring the post bolt holes (1/32 to 1/16 inch larger than the bolt diameter). The hold down shall be installed tight to the hold down post without fillers or dapping. The post bolts shall not be countersunk into the hold down post u.n.o. Do not bend hold down anchors.
11. Preservative treated wood: wood exposed to the weather; foundation plates on concrete slabs and foundations which are in direct contact with earth shall be treated.
12. Top plates: two pieces, same size as studs, stagger splices 4'-0" minimum. Center splices over studs. Splice with 16d minimum u.n.o.
13. Full depth solid blocking or cross bracing: installed at intervals not exceeding 8 feet for all joists and rafters 2x12 and deeper.
14. Solid blocking: two inch full width blocking (fire stops) in concealed spaces of stud walls and partitions.
15. Cutting and notching: do not cut, bore, countersink or notch wood members except where shown in the details. Holes through plates, studs and double plates in walls shall not exceed 40% of the member width and located in the center of the member.
16. Partitions: double joists under partitions parallel to joists and provide solid blocking under partitions perpendicular to joists.
17. End support: roof and floor joists over 4 inches deep shall have their ends held in position with either:
    a. full depth solid blocking
    b. nailed bridging
    c. nailing or bolting to other framing members; or
    d. approved joist hangers
18. Galvanizing: all exposed steel timber hardware, fasteners and connectors.

SPECIAL INSPECTION AND TESTING SCHEDULE

1. Concrete – Submit mix designs to Architect and Engineer for review and approval prior to pour. Compression cylinders required
2. Reinforcing steel – Placement, size, laps, tolerances, spacing, by Testing Agency prior to pour
3. Grading, excavation, structural fill, compaction by Geotechnical Engineer of Record
4. Anchors installed in hardened concrete – Periodic inspection by testing agency

STRUCTURAL REGISTERED PROFESSIONAL ENGINEER 19159PE OREGON JULY 15, 1987 BARBARA L. CIOTA EXPIRES: 12/31/21

CIOTA ENGINEERING
156 CLEAR CREEK DR SUITE 101
ASHLAND, OR 97520
PHONE: (541) 552-0290

Willow Wind Renovations
1497 E. Main St. Ashland, OR 97520

STRUCTURAL GENERAL NOTES

SCALE: NTS
2/1/21
20-051/S-GEN

S1

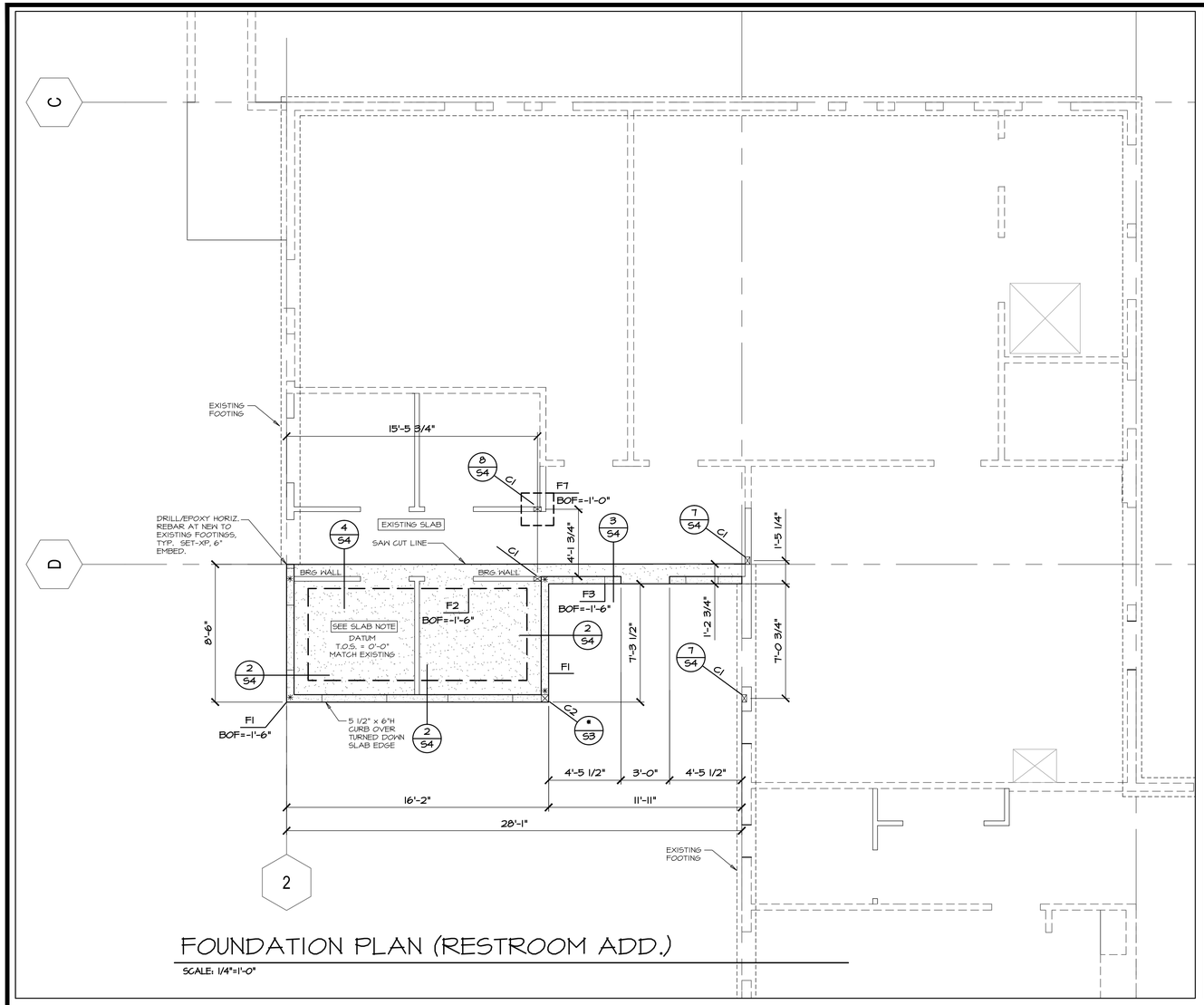

FOUNDATION PLAN (RESTROOM ADD.)

SCALE: 1/4"=1'-0"

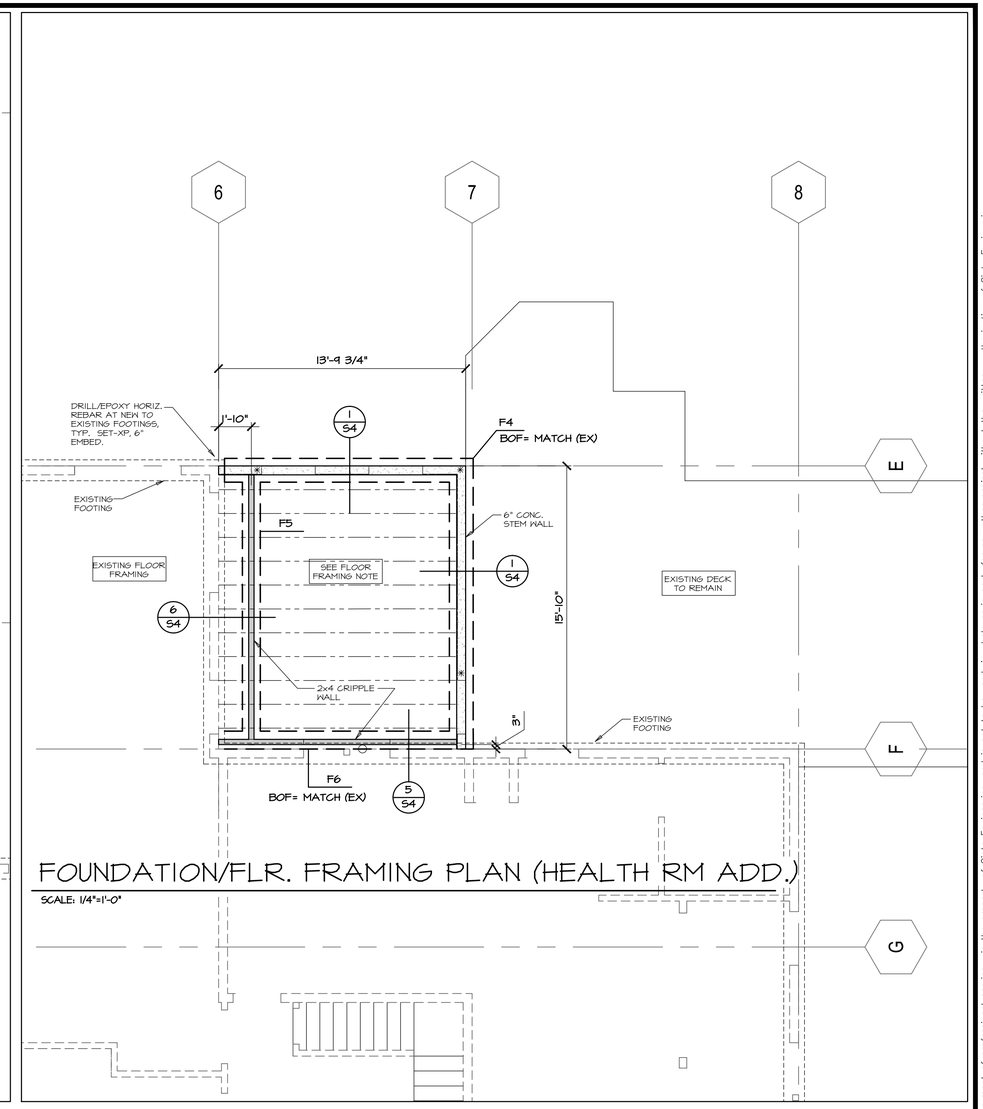

FOUNDATION/FLR. FRAMING PLAN (HEALTH RM ADD.)

SCALE: 1/4"=1'-0"

FOOTING SCHEDULE

DO NOT SCALE FOOTINGS

TYPE	SIZE	REINFORCEMENT
F1	1'-4" W x 18" D CONT. MONOLITHIC FTG.	(3) #5 CONT., DTL 2/S4
F2	1'-6" W x 18" D CONT. MONOLITHIC FTG.	(4) #5 CONT., DTL 2,4/S4
F3	1'-2 3/4" W x 18" D CONT. MONO. FTG.	(2) #4 CONT., DTL 3/S4
F4	1'-4" W x 10" D CONT. STRIP FTG.	(3) #4 CONT., DTL 1/S4
F5	1'-0" W x 10" D CONT. STRIP FTG.	(2) #4 CONT., DTL 6/S4
F6	1'-4" W x 18" D CONT. STRIP FTG.	(4) #5 CONT., DTL 5/S4
F6	2'-6" SQ x 12" D SPREAD FOOTING	(4) #5 E.W., DTL 8/S4

LEGEND

- C - INDICATES NEW COLUMN
- INDICATES NEW I-JOIST FLOOR FRAMING
- INDICATES EXISTING STUD WALLS
- INDICATES NEW FOOTINGS
- INDICATES NEW CRIPPLE WALL
- INDICATES NEW STUD OR SHEAR WALL
- INDICATES NEW CONCRETE WALL OR CURB
- INDICATES ASSUMED EXISTING FOUNDATION LINE

FLOOR FRAMING NOTE:

ALL FLOOR FRAMING MEMBERS SHALL BE 11 7/8" BCI 6500 1.8 DF @ 16" OC, MULTI-SPAN. ALL WEB PENETRATIONS PER MNFR SPECS. TOP HANG ON PERIMETER STEM WALL PT PLATE, TYP.

AT INTERMEDIATE BEARING CRIPPLE WALL, INSTALL BCI BLOCKING EA BAY, TYP.

FLOOR SHEATHING NOTE:

DETAIL 8/S6

3/4" STRUCT 2, T&G, C-D EXT. GLUE PLYWOOD OR APA RATED OSB EXPOSURE 1, PANEL I.D. 48/24. ATTACH W/ PANEL ADHESIVE AND NAIL TO FRAMING W/ 10D COMMONS @ 6" OC AT ALL SUPPORTED PANEL EDGES AND AT 12" OC AT INTERMEDIATE SUPPORTS. (SIMPSON STRONG-DRIVE WSNTL SUBFLOOR SCREWS RECOMMENDED). INSTALL PANELS PERPENDICULAR TO FRAMING AND STAGGER PANELS, TYP.

SLAB NOTE:

4" CONCRETE SLAB W/ #3 @ 16" OC EACH WAY ON VAPOR BARRIER OVER 4" OF 1/2"-3/4" CLEAN CRUSHED CAPILLARY BREAK OVER 3/4" MINUS COMPACTED STRUCTURAL FILL OVER UNDISTURBED NATIVE. SAW JOINTS RECOMMENDED AT 8' OC, DETAIL 3/S1. FIBER MESH ADDITIVE FOR CRACK CONTROL AT OWNERS OPTION. DRAINAGE BY CONTRACTOR

UNLESS NOTED OTHERWISE

✳ INDICATES SIMPSON HDU4-SDS HOLDOWN W/ SB5/8x24" ANCHORS. INSTALL PER MNFR SPEC. DOUBLE 2x6 EDGE STUDS MIN. REQUIRED WITH 16D NAILING @ 8" OC STAGGERED EACH LAYER. SEE DETAIL 9/S4

COLUMN SCHEDULE

MK	SIZE	REMARKS
C1	3 1/2 X 5 1/2" VERSA-LAM	2.0 3100 DF
C2	6 x 6 DOUG FIR LARCH	SELECT STRUCTURAL
C3		

PLAN NOTES:

1. DIMENSIONS SHOWN ARE TO FACE OF CONCRETE WALL.
2. ALL FOOTING AND SLAB SUBGRADES SHALL BE PREPARED PER 2014 OSSC STANDARDS TO ACHIEVE MINIMUM 1500 PSF BEARING CAPACITY. REMOVE ALL EXPANSIVE SOILS AND ORGANICS. OVEREXCAVATE AS REQUIRED TO COMPETENT NATIVE SUBGRADE AND BRING UP WITH COMPACTED STRUCTRAL FILL. CONTRACTOR SHALL VERIFY OR CONSULT WITH GEOTECHNICAL ENGINEER.
3. SLAB SUBGRADE SHALL BE COMPACTED CRUSHED ROCK PER CODE STADANRDS AND WITH CAPILLARY BREAK, VAPOR BARRIER AND ANY REQUIRED DRAINAGE BY CONTRACTOR.
4. FOOTING & WALL CONCRETE MIX SHALL BE 3,000 PSI MIN AT 28 DAYS. PROVIDE MIX DESIGNS TO E.O.R..
5. CONCRETE COMPRESSION TESTS REQUIRED.
6. TESTING AGENCY TO PROVIDE CONCRETE AND REINFORCEMENT SPECIAL INSPECTIONS.
7. VERIFY ALL DIMENSIONS PRIOR TO CONSTRUCTION.
8. ALL WATER PROOFING, UNDERSLAB DRAINAGE, PERIMETER FOOTING DRAINS AND MOISTURE PROTECTION IS BY CONTRACTOR.
9. HEADER JAMB STUD/POST NOT SHOWN, FIELD VERIFY LOCATIONS.
10. CRAWL SPACE ACCESS AT LOCATION PER ARCHITECT.
11. CONTRACTOR TO VERIFY EXISTING STRUCTURAL SYSTEMS IMPACTED BY ANY NEW CONSTRUCTION ARE IN SOUND CONDITION. CONTACT E.O.R. AND ARCHITECT WITH ANY CONCERNS OR DISCREPANCIES.

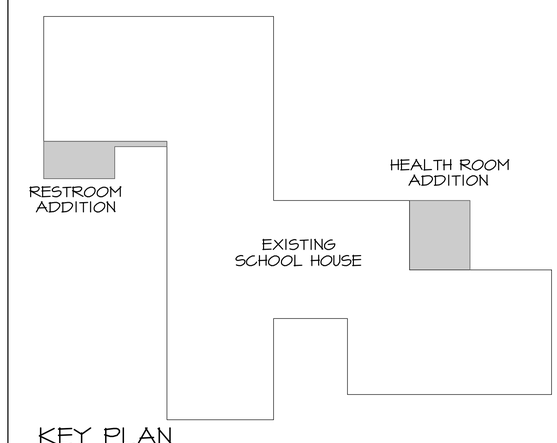

KEY PLAN

STRUCTURAL REGISTERED PROFESSIONAL ENGINEER 19152PE OREGON JULY 15, 1997 BARBARA L. CIOTA EXPIRES: 12/31/21

CIOTA ENGINEERING
156 CLEAR CREEK DR SUITE 101
ASHLAND, OR 97520
PHONE: (541) 552-0290

Willow Wind Renovations

1497 E. Main St. Ashland, OR 97520

Foundation Plans

SCALE: 1/4"=1'-0"
2/1/21

20-051/S-PLANS

S2

SHT. 2 OF 6

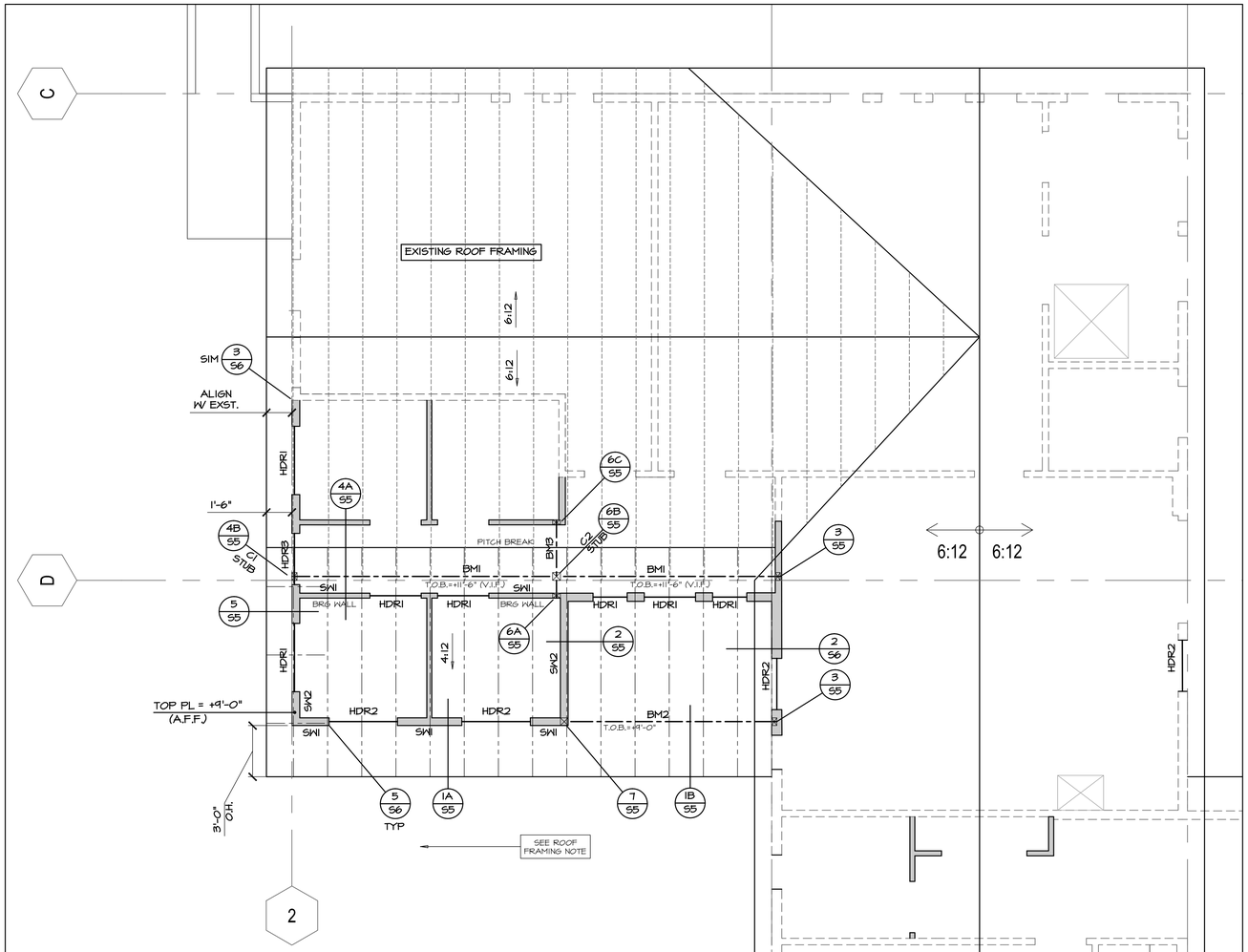

ROOF FRAMING PLAN (RESTROOM ADD.)

SCALE: 1/4"=1'-0"

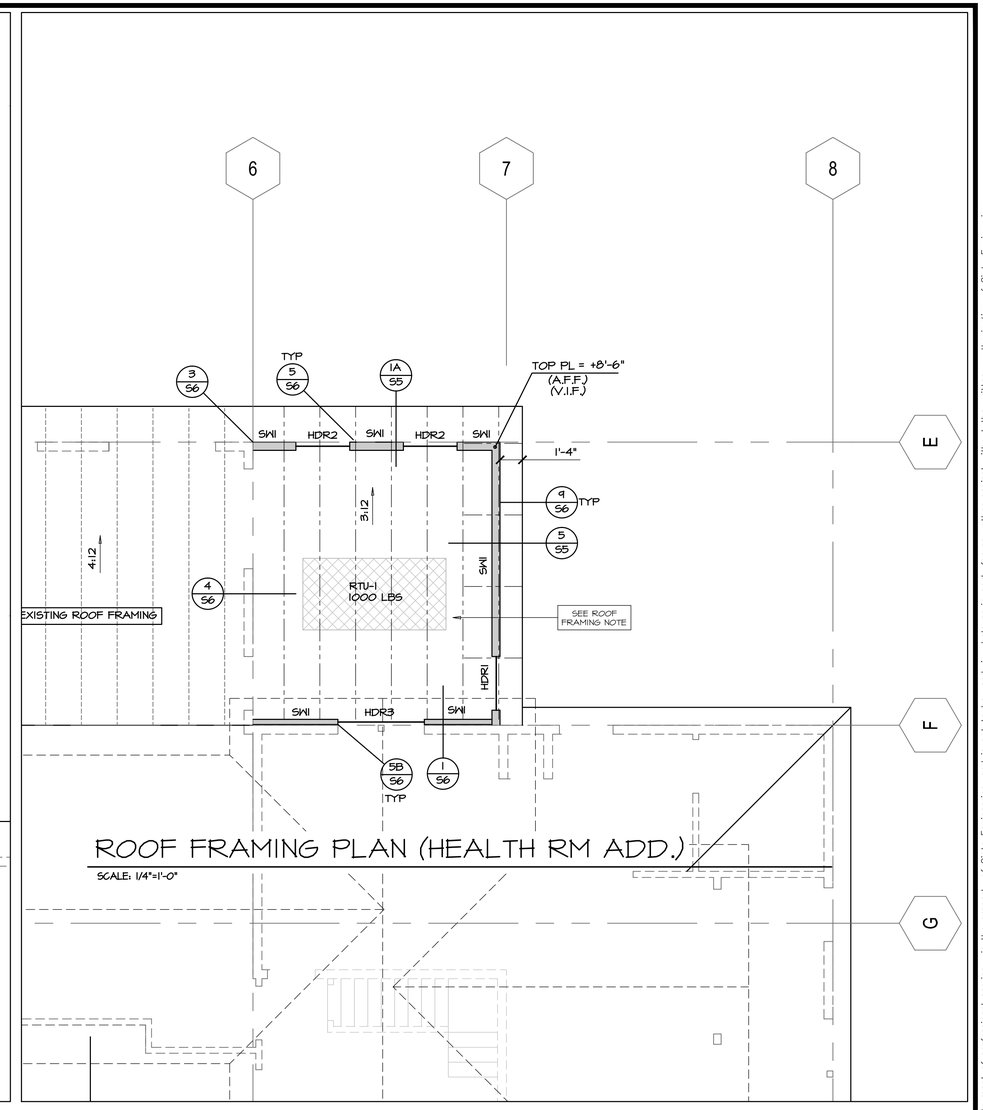

ROOF FRAMING PLAN (HEALTH RM ADD.)

SCALE: 1/4"=1'-0"

ROOF FRAMING NOTES:

PRE-ENGINEERED GANG NAIL ROOF TRUSSES AT 24" OC BY OREGON LICENSED ENGINEER AND TRUSS DESIGNER.

2x4 OUTLOOKERS @ 48" OC W/ LET-IN GABLE TRUSSES BY TRUSS MNFR, TYP.

ALL TRUSS TO TRUSS CONNECTION BY TRUSS MANUFACTURER.

PROVIDE TRUSS SHOP DRAWINGS TO ENGINEER FOR REVIEW PRIOR TO FABRICATION.

H2.5A CLIPS REQ'D AT ALL TRUSS BEARING.

RESTROOM ADDITION: MONO TRUSSES W/ CANTILEVER TOP CHORD EXTENDED TO PITCH BREAK AT EXISTING ROOF. DO NOT SUPPORT NEW FRAMING ON EXISTING ROOF.

HEALTH ROOM ADDITION: MONO TRUSSES. VERIFY MECH. UNIT WEIGHT AND SIZE TO INCLUDE IN TRUSS DESIGN. RTU TO BE SUPPORTED ON FRAMED PLATFORM/CURB OVER TRUSSES. COORD W/ MECH. ENG. AND ARCH FOR ALL OTHER REQUIREMENTS INCLUDING GUARDRAILS AND CLEARANCES.

ROOF SHEATHING NOTE: DETAIL 8/S6

5/8" C-D EXT. GLUE PLYWOOD OR APA RATED OSB EXPOSURE 1, PANEL I.D. 40/20. NAIL TO FRAMING W/ 8D COMMONS @ 6" OC AT ALL SUPPORTED PANEL EDGES AND AT 12" OC AT INTERMEDIATE SUPPORTS. INSTALL PERPENDICULAR TO FRAMING AND STAGGER PANELS.

HEADER SCHEDULE DETAIL 5/S6, TYP

MK	SIZE	SUPPORT STUDS, UON
HDR1	3 1/2 x 5 1/2" VERSA-LAM 2.0 3100 DF	(1) JAMB , (1) KING
HDR2	3 1/2 x 7 1/4" VERSA-LAM 2.0 3100 DF	(1) JAMB , (1) KING
HDR3	3 1/2 x 9 1/2" VERSA-LAM 2.0 3100 DF	(2) JAMB , (2) KING
HDR4		

LEGEND

- SW# - INDICATES 2x4 OR 2x6 SHEAR WALL. SEE 6/S6, 7/S6
- INDICATES NEW ROOF FRAMING/TRUSSES
- INDICATES EXISTING ROOF FRAMING
- INDICATES EXISTING STUD WALLS
- INDICATES NEW INTERIOR PARTITION WALL, SEE ARCH
- INDICATES NEW HEADER, SEE SCHEDULE
- INDICATES NEW BEAM, SEE SCHEDULE

BEAM SCHEDULE

MK	SIZE	REMARKS
BM1	5 1/2 x 13 1/2" GLULAM	24F-V4 DF
BM2	5 1/2 x 9" GLULAM	24F-V4 DF
BM3	5 1/2 x 12" GLULAM	24F-V4 DF

PLAN NOTES:

1. SEE ARCHITECT FOR ALL INTERIOR PARTITIONS, DIMENSIONS AND OTHER INFORMATION.
2. ALL DRAINAGE, MOISTURE PROTECTION, SEALANTS AND FLASHINGS BY OTHERS.
3. SEE ROOF FRAMING NOTE FOR REQUIREMENTS.
4. SUBMIT TRUSS SHOP DRAWING AND LAYOUT TO EOR & ARCH FOR REVIEW AND APPROVAL PRIOR TO FABRICATION.
5. SEE DETAIL 6/S6 AND 7/S6 FOR SHEARWALL NAILING REQUIREMENTS AND SCHEDULE.
6. SEE DETAILS 8/S6 FOR DIAPHRAGM NAILING REQUIREMENTS.
7. SEE DETAIL 9/S6 FOR DOUBLE TOP PLATE SPLICE REQUIREMENTS.
8. ALL NEW TO EXISTING TOP PLATES AND ANY DISCONTINUOUS TOP PLATE SHALL BE STRAPPED W/ CS16x30" STRAP TIE.

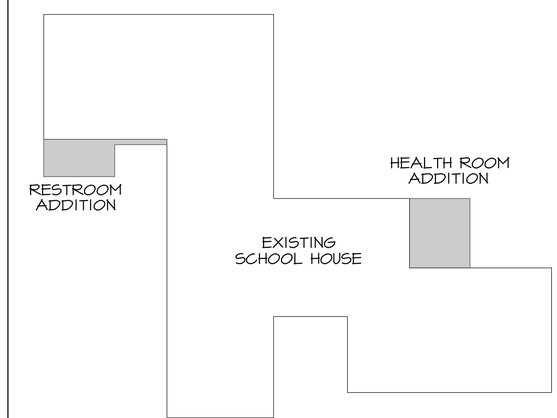

KEY PLAN

STRUCTURAL REGISTERED PROFESSIONAL ENGINEER 19152PE OREGON JULY 15, 1997 BARBARA L. CIOTA EXPIRES: 12/31/21

CIOTA ENGINEERING
156 CLEAR CREEK DR SUITE 101
ASHLAND, OR 97520
PHONE: (541) 552-0290

Willow Wind Renovations

1497 E. Main St. Ashland, OR 97520

Roof Framing Plan

SCALE: 1/4"=1'-0"
2/1/21

20-051/S-PLANS

S3

SHT. 3 OF 6

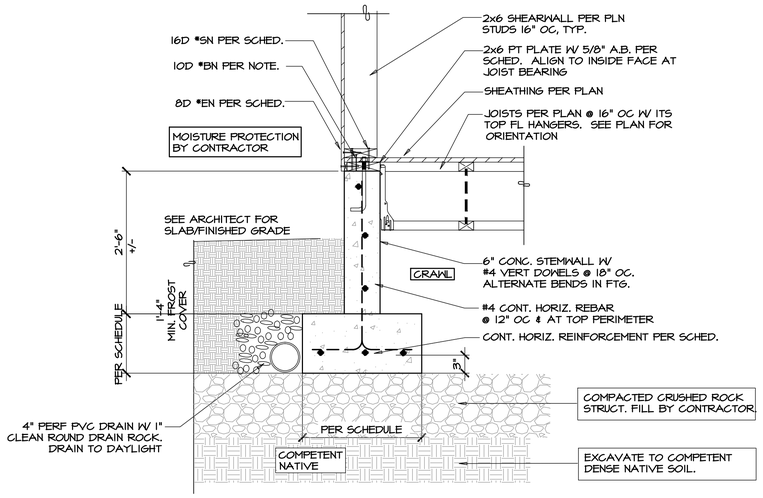

1 FOUNDATION DETAIL

Scale: 1"=1'-0"

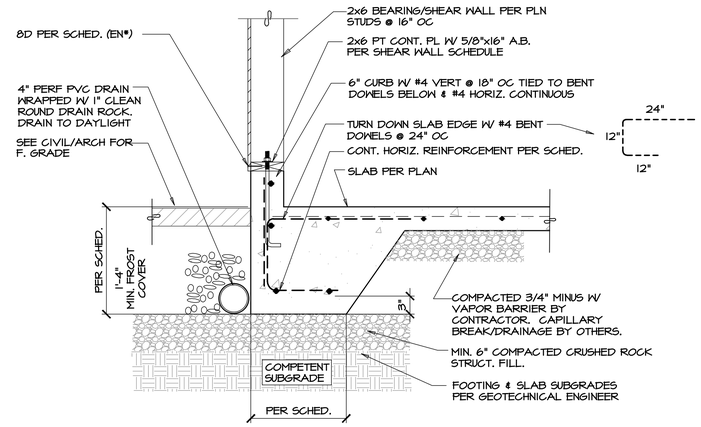

2 FOUNDATION DETAIL

Scale: 1"=1'-0"

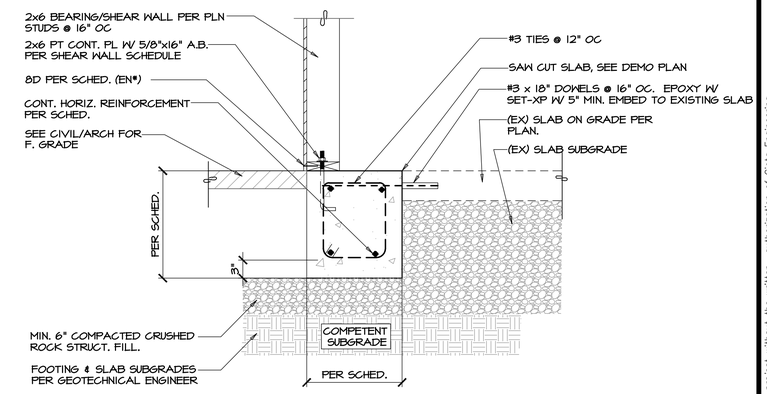

3 FOUNDATION DETAIL

Scale: 1"=1'-0"

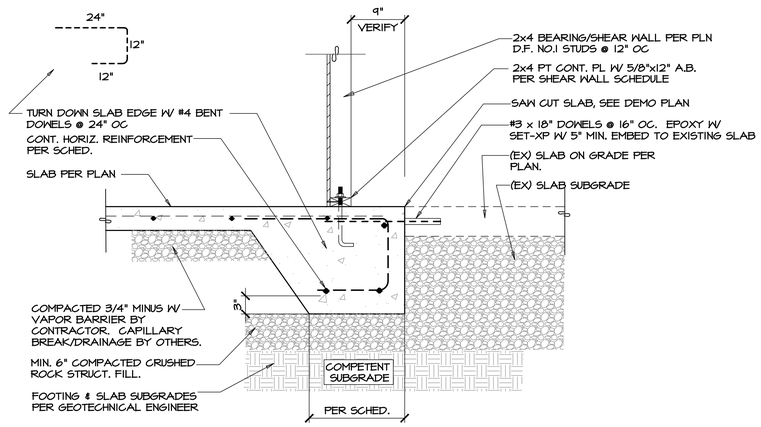

4 FOUNDATION DETAIL

Scale: 1"=1'-0"

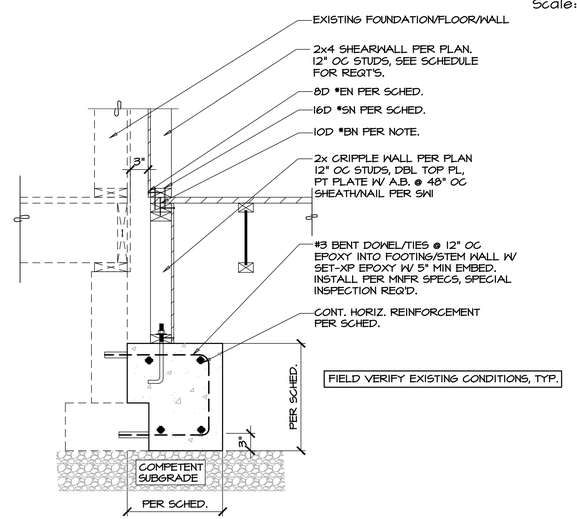

5 FOUNDATION/FRAMING DETAIL

Scale: 1"=1'-0"

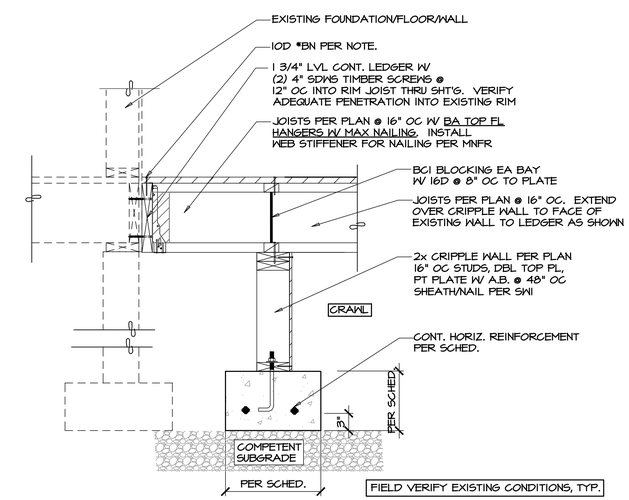

6 FOUNDATION/FRAMING DETAIL

Scale: 1"=1'-0"

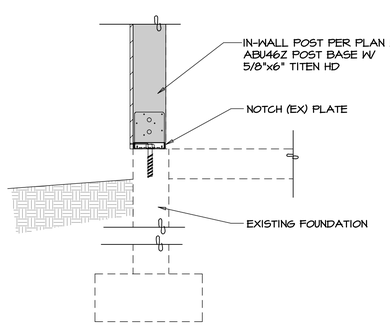

7 FOUNDATION DETAIL

Scale: 1"=1'-0"

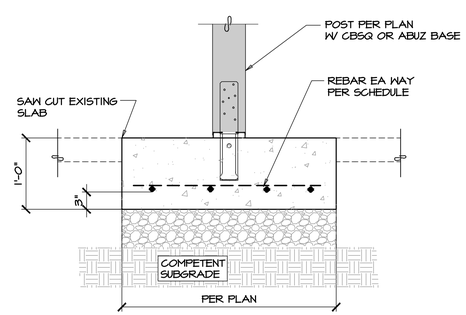

8 FOUNDATION/FRAMING DETAIL

Scale: 1"=1'-0"

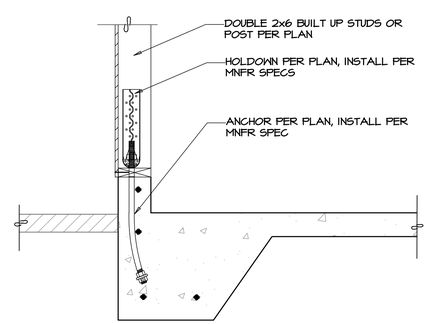

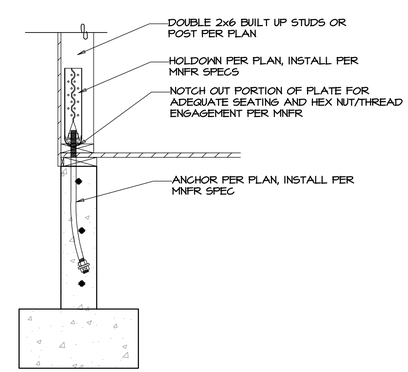

9 HOLDOWN DETAILS

Scale: 1"=1'-0"

STRUCTURAL REGISTERED PROFESSIONAL ENGINEER 19159PE OREGON JULY 15, 1997 BARBARA L. CIOTA EXPIRES: 12/31/21

CIOTA ENGINEERING
156 CLEAR CREEK DR SUITE 101
ASHLAND, OR 97520
PHONE: (541) 552-0290

Willow Wind Renovations

1497 E. Main St. Ashland, OR 97520

STRUCTURAL DETAILS

SCALE: 1"=1'-0"
2/1/21

20-051/S-DTLS

S4

SHT. 4 OF 6

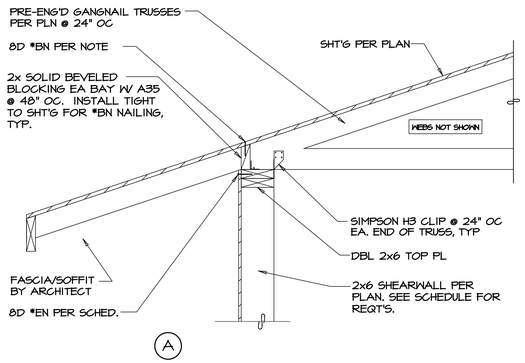

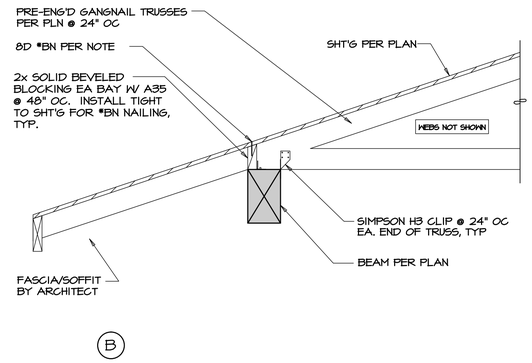

1 SHEAR TRANSFER DETAILS

Scale: 1"=1'-0"

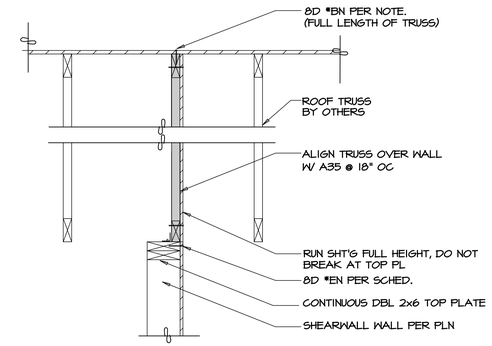

2 SHEAR TRANSFER DETAILS

Scale: 1"=1'-0"

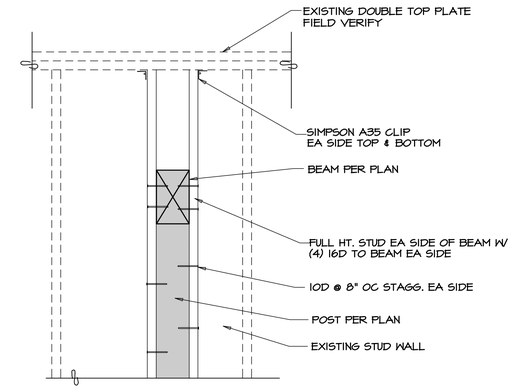

3 FRAMING DETAIL

Scale: 1"=1'-0"

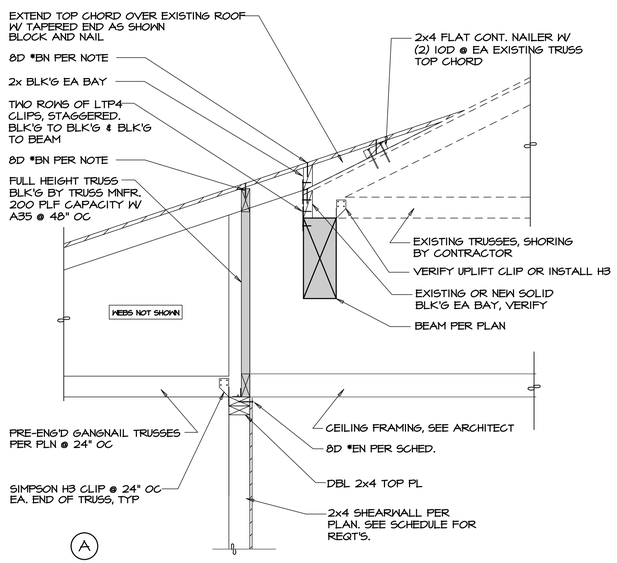

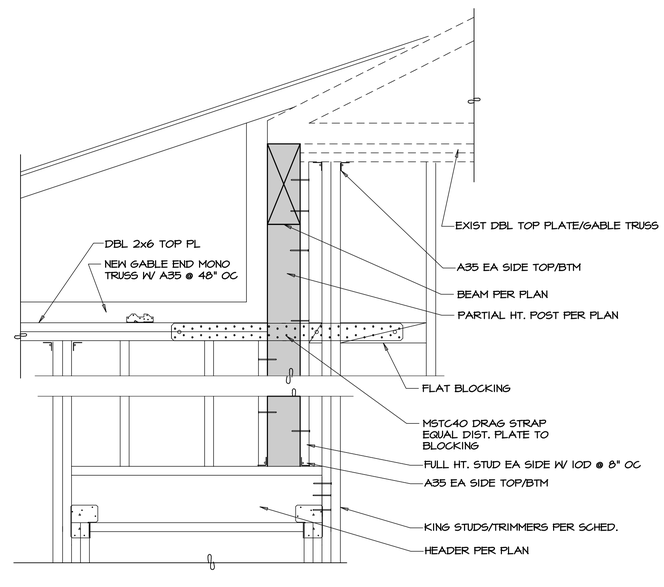

4 SHEAR TRANSFER DETAILS

Scale: 1"=1'-0"

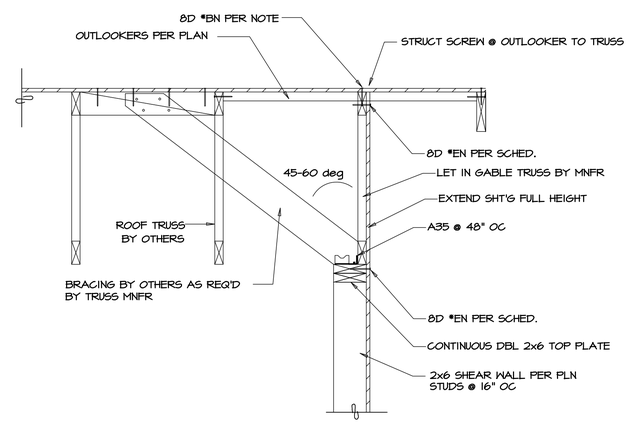

5 SHEAR TRANSFER DETAILS

Scale: 1"=1'-0"

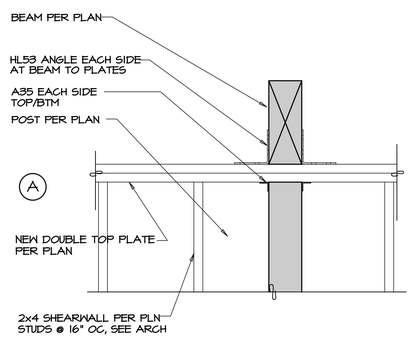

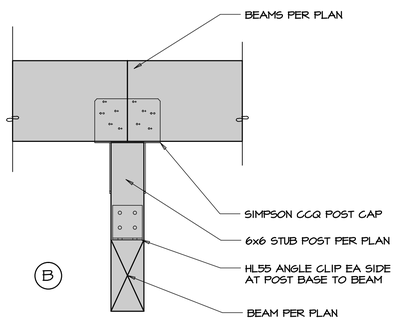

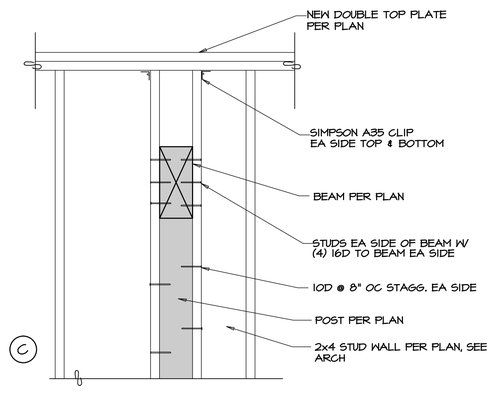

6 FRAMING DETAILS

Scale: 1"=1'-0"

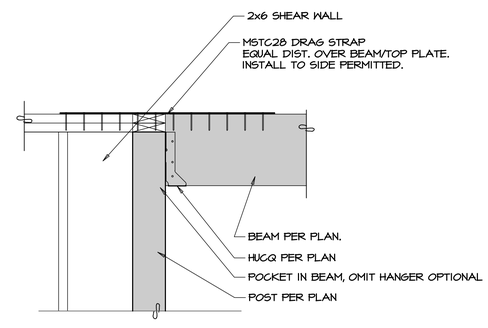

7 SHEAR TRANSFER DETAILS

Scale: 1"=1'-0"

STRUCTURAL REGISTERED PROFESSIONAL ENGINEER 19159PE OREGON JULY 15, 1997 BARBARA L. CIOTA EXPIRES: 12/31/21

CIOTA ENGINEERING
156 CLEAR CREEK DR SUITE 101
ASHLAND, OR 97520
PHONE: (541) 552-0290

Willow Wind Renovations

1497 E. Main St. Ashland, OR 97520

STRUCTURAL DETAILS

SCALE: 1"=1'-0"
2/1/21

20-051/S-DTLS

S5

SHT. 5 OF 6

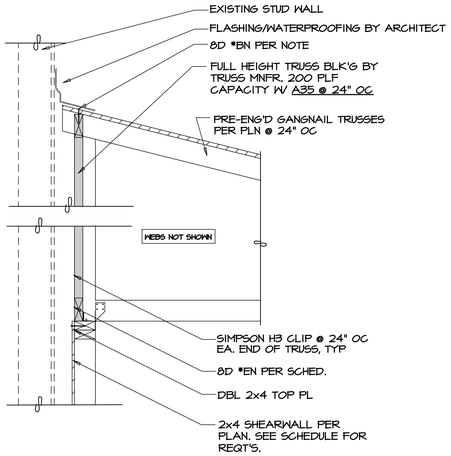

1 SHEAR TRANSFER DETAILS

Scale: 1"=1'-0"

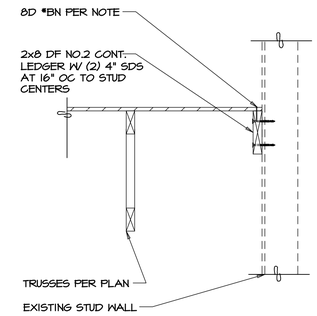

2 SHEAR TRANSFER DETAILS

Scale: 1"=1'-0"

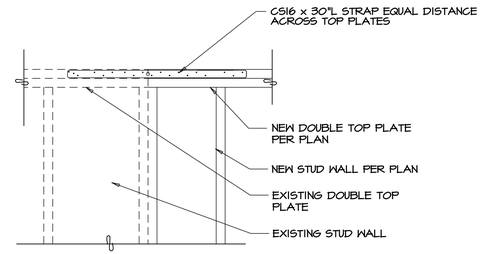

3 SHEAR TRANSFER DETAILS

Scale: 1"=1'-0"

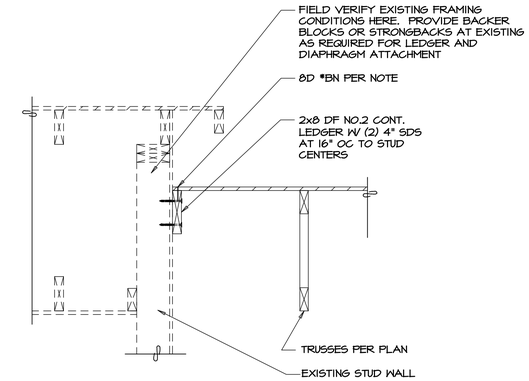

4 SHEAR TRANSFER DETAILS

Scale: 1"=1'-0"

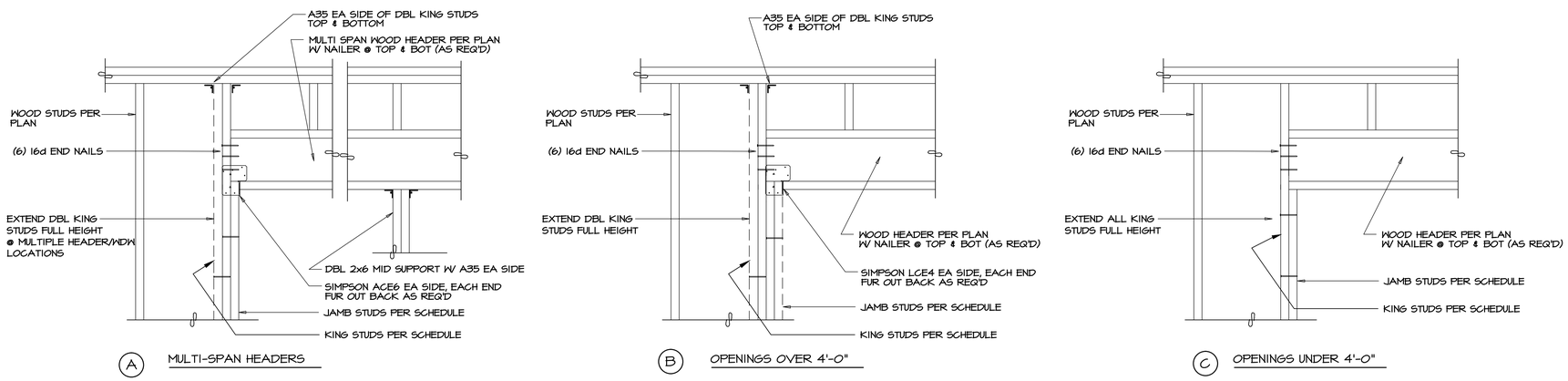

5 HEADER DETAILS, TYP.

Scale: 1"=1'-0"

SHEAR WALL NAILING SCHEDULE				
MK ON PLAN	MATERIAL (f.note 1)	SHEATHING EDGE NAILING (EN*) (f.note 2,4)	SHEAR TRANSFER NAILING (SN*) (f.note 4)	ANCHOR BOLTS (f.note 6,7)
SW1	7/16" OSB (one side)	8d @ 6" OC	16d @ 6" OC	5/8"x12" @ 48" OC
SW2	7/16" OSB (one side)	8d @ 4" OC	16d @ 4" OC	5/8"x12" @ 24" OC
SW3	7/16" OSB (one side)	8d @ 3" OC	16d @ 3" OC	5/8"x12" @ 12" OC

FOOTNOTES & CODE REQUIREMENTS: STUDS ARE 16" OC

1. Sheathing shall be 'APA' rated [OSB] Struct 1, C-D, ext. glue, 24/16 span rating.
2. Edge nailing (EN*) as called for on plans and in details, refers to edges of all sheets into vertical studs, bottom & top plates and horizontal 2x edge blocking. See Shear Wall nailing detail.
3. Field nailing (FN*) at intermediate supports shall be 8d @ 6" oc.
4. Shear nailing (SN*) occurs at bottom plate into diaphragm sheathing.
5. Where shear wall is more than one panel in height, block edges and stagger joints.
6. Anchor bolts shall be A307 grade with standard bend. Project 2 1/2" min above sill plate. Anchor sill plate with 0.224x3" sqaure washers (or approved equal) per 2019 OSSC-section 2308.12.8 (Seismic Cat. D). See Shear Wall nailing detail.
7. Sill plates shall be 2x or 3x P.T. Doug Fir with additional anchor bolts at 6" from each end of each plate & openings.
8. All shear wall segment ends with holdowns require double studs attached with 16d @ 8" oc staggered, or post as shown on plans.
9. Nails shall be 8d common (2 1/2"x0.131"). Galvanized nails shall be hot dipped.

6 SHEARWALL SCHEDULE

Scale: NTS

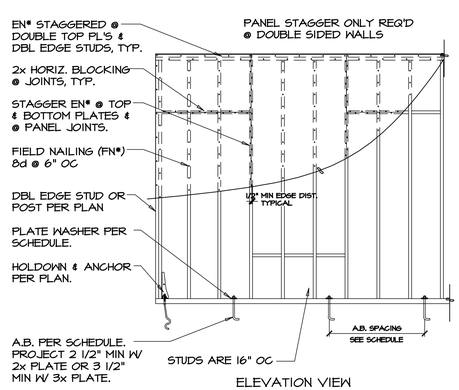

7 SHEARWALL NAILING

Scale: NTS

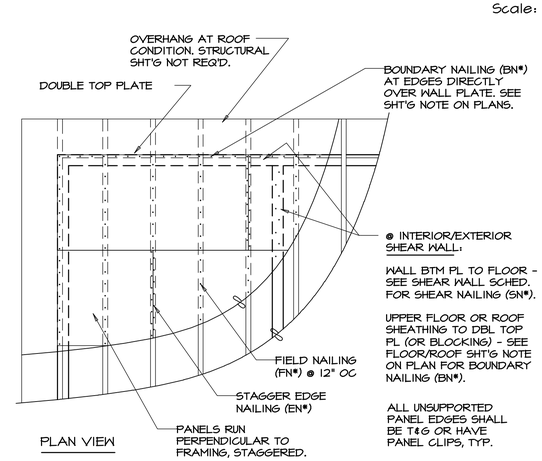

8 UNBLOCKED DIAPHRAGM

Scale: NTS

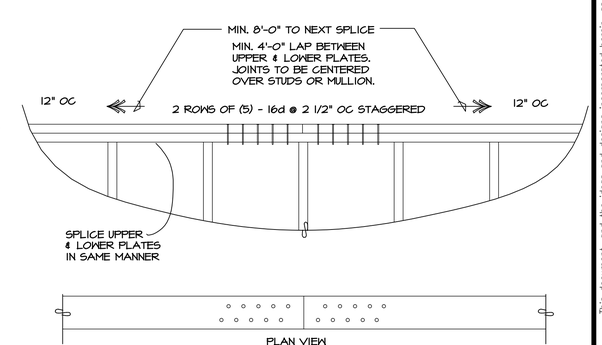

9 TOP PLATE SPLICE

Scale: NTS

STRUCTURAL REGISTERED PROFESSIONAL ENGINEER 19152PE OREGON JULY 15, 1997 BARBARA L. CIOTA EXPIRES: 12/31/21

CIOTA ENGINEERING
156 CLEAR CREEK DR SUITE 101
ASHLAND, OR 97520
PHONE: (541) 552-0290

Willow Wind Renovations

1497 E. Main St. Ashland, OR 97520

STRUCTURAL DETAILS

SCALE: 1"=1'-0"
2/1/21

20-051/S-DTLS

S6

SHT. 6 OF 6

ELECTRICAL SYMBOLS

- DUPLEX CONVENIENCE RECEPTACLE
- GFCI PROTECTED DUPLEX CONVENIENCE RECEPTACLE MOUNTED @ 42" AFF
- 240/208V
- 4-PLEX RECEPTACLE
- 240/208V CONVENIENCE RECEPTACLE
- JUNCTION BOX
- FAN
- F — DISCONNECTING MEANS. AS A MINIMUM, PROVIDE/INSTALL TYPE, RATINGS, AND FUSING AS SHOWN ON THE DRAWINGS AND IN THE SPECIFICATIONS. COORDINATE FINAL REQUIREMENTS WITH THE MANUFACTURER OF THE EQUIPMENT TO BE INSTALLED. PROVIDE ENCLOSURES RATED FOR THE ENVIRONMENT IN WHICH THEY ARE INSTALLED.
  - -F INDICATES FUSED DISCONNECT
  - -B INDICATES CIRCUIT BREAKER
  - -S INDICATES MOTOR-RATED TOGGLE SWITCH
- GROUND ROD
- GROUND

- A / 35 — SECTION OR DETAIL DESIGNATION (LETTER DESIGNATES SECTION, NUMBER DESIGNATES DETAIL); SHEET WHERE SECTION OR DETAIL IS TAKEN OR SHOWN
- OH — OVERHEAD UTILITY SERVICE
- CONDUIT EMBEDDED OR BURIED
- CONDUIT EXPOSED
- BOUNDARY LINE
- A-1 — HOMERUN - DESTINATION & CIRCUIT INDICATED
  - -LEADER SHOWS CONDUIT & CONDUCTOR SIZE
  - -2 REPRESENTS THE NUMBER OF PARALLEL FEEDERS
  - 1 1/4"C-3#2+#6G
  - 2[3"C-3#350KCMIL]
- CONDUIT, STUBBED & CAPPED
- CONDUIT, STUBBED UP & CAPPED
- CONDUIT, UP
- CONDUIT, DOWN
- WH — WATT-HOUR METER
- CURRENT TRANSFORMER
- 50/2 — CIRCUIT BREAKER & SIZE, SINGLE-POLE UNLESS NOTED OTHERWISE
  - /2 = 2 POLE
  - /3 = 3 POLE
- TRANSFORMER

SCOPE OF WORK

THIS SET OF DRAWINGS COVERS CONCEPTUAL DESIGN OF POWER DISTRIBUTION FOR HVAC UPGRADES OF AN EXISTING 7,500 SQUARE FOOT SCHOOL BUILDING LOCATED AT 1497 E. MAIN ST. IN ASHLAND, OR. THE PROJECT ALSO REQUIRES THE FOLLOWING RELATED WORK AND SYSTEMS, WHICH ARE NOT SHOWN ON THESE DRAWINGS:

- DEMOLITION OF OVERHEAD SERVICE LATERALS.
- NEW THREE PHASE UTILITY SERVICE.
- ELECTRIC SERVICE LATERALS TO SERVICE ENTRANCES SHOWN ON THESE DRAWINGS.
- POWER DISTRIBUTION TO HVAC EQUIPMENT.
- RE-FEED EXISTING PANEL DISCONNECTS.
- REPLACE LIGHT FIXTURES IN KIND WITH LED-EQUIVALENT FIXTURES WHICH COMPLY WITH ENERGY TRUST OF OREGON REBATE INCENTIVE CRITERIA.
- THESE DRAWINGS ARE CONCEPTUAL IN NATURE, AND ARE NOT SUITABLE FOR PERMITTING AND CONSTRUCTION. DETAILED DESIGN BY THE CONTRACTOR'S ORGANIZATION IS REQUIRED, WHICH BUILD ON THE CONCEPTS HEREIN.

ABBREVIATIONS

A	AMP(S)	GFCI	GROUND FAULT CIRCUIT INTERRUPTER (PERSONNEL)	NTS	NOT TO SCALE
AFCI	ARC FAULT CIRCUIT INTERRUPTER	GFP	GROUND FAULT PROTECTION (EQUIPMENT)	OL	OVERLOAD
AFF	ABOVE FINISHED FLOOR	GFR	GROUND FAULT RELAY	PB	PULLBOX
AFG	ABOVE FINISHED GRADE	GRS	GALVANIZED RIGID STEEL CONDUIT	PC	PHOTOCELL
AIC	AMPS INTERRUPTING CAPACITY	HP	HORSEPOWER	PNL	PANEL, PANELBOARD
AL	ALUMINUM	HZ	HERTZ	PVC	POLYVINYL CHLORIDE CONDUIT
ATS	AUTOMATIC TRANSFER SWITCH	IMC	INTERMEDIATE METAL CONDUIT	RECEPT	RECEPTACLE
AWG	AMERICAN WIRE GAUGE	KCMIL	THOUSAND CIRCULAR MILS	SF	SQUARE FOOTAGE
C	CONDUIT	KW	KILOWATT	SP	SPARE
CATV	CABLE TELEVISION	MAX	MAXIMUM	SS	304 STAINLESS STEEL
CEC	CALIFORNIA ELECTRICAL CODE	MIN	MINIMUM	SWGR	SWITCHGEAR
CFL	COMPACT FLUORESCENT	MLO	MAIN LUG ONLY	TSP	TWISTED SHIELDED PAIR
CU	COPPER	MPOE	MAIN POINT OF ENTRY	TST	TWISTED SHIELDED TRIAD
DC	DIRECT CURRENT	N	NEUTRAL	TYP	TYPICAL
EA	EACH	N/A	NOT APPLICABLE	V	VOLT(S)
EMT	ELECTRICAL METALLIC TUBING	NL	NIGHT LIGHT	VA	VOLT AMPS
EXST,(E)	EXISTING	NEC	NATIONAL ELECTRICAL CODE	W	WIRE
G	GROUND			WP	WEATHERPROOF
				XFMR	TRANSFORMER

GENERAL NOTES

1. DESIGN/BUILD:
   - A. THESE DRAWINGS ARE FOR THE DIVISION 26 CONTRACTOR TO ENGINEER, DESIGN, BID AND INSTALL ELECTRICAL SYSTEMS PER THE DESIGN INTENT SHOWN.
   - B. THIS PACKAGE IS NOT INTENDED TO BE USED FOR PERMITTING AND CONSTRUCTION. THE CONTRACTOR'S ORGANIZATION SHALL TAKE THE CONCEPTS HEREIN, AND DEVELOP DETAILED STAMPED, SIGNED ENGINEERED DRAWINGS SUITABLE FOR PERMITTING AND CONSTRUCTION.
   - C. ALL EQUIPMENT, CONDUIT AND CONDUCTOR SIZES, AND COMPONENTS SHOWN IN THESE DRAWINGS SHALL BE ADHERED TO, UNLESS THE ENGINEERING RESULTS IN LARGER SIZES, IN WHICH CASE, SIZES SHALL BE INCREASED.
   - D. THE CONTRACTOR SHALL DESIGN AND INSTALL FULLY OPERATIONAL SYSTEMS.
   - E. DESIGN AND AS-BUILT DRAWINGS SHOWING ALL EQUIPMENT, COMPONENTS, AND CONDUIT ROUTING SHALL BE PREPARED TO THE SAME SCALE AS THESE DRAWINGS. AS-BUILT DRAWINGS SHALL BE DRAWN IN AUTOCAD. ELECTRONIC COPIES SHALL BE PROVIDED TO THE OWNER AND ARCHITECT/ENGINEER.
2. THE ENTIRE INSTALLATION SHALL CONFORM TO THE REQUIREMENTS OF THE MOST RECENTLY ADOPTED ELECTRICAL CODE, BUILDING CODE AND ALL OTHER APPLICABLE CITY, COUNTY, AND STATE CODES AND REGULATIONS IN EFFECT AT THE DATE OF THE BID. CONFORM TO ANY CODES, RULES, REGULATIONS AND REQUIREMENTS THAT THE PROJECT OWNER HAS.
3. OBTAIN ALL PERMITS AND INSPECTIONS/APPROVALS ON ELECTRICAL WORK FROM REGULATING AGENCIES WHERE REQUIRED.
4. PRIOR TO PROCUREMENT AND INSTALLATION THE CONTRACTOR SHALL COORDINATE THE INSTALLATION OF ALL ELECTRICAL CONDUIT AND EQUIPMENT WITH MECHANICAL PIPING, EQUIPMENT, DUCTWORK, AND ALL OTHER TRADES INCLUDING BUT NOT LIMITED THE MECHANICAL CONTRACTOR, PLUMBING CONTRACTOR, FIRE PROTECTION CONTRACTOR, GENERAL CONTRACTOR, AND ANY CONTRACTOR HIRED DIRECTLY BY THE OWNER. WHERE CONFLICTS MAY OCCUR, THEY SHALL BE RESOLVED PRIOR TO INSTALLATION.
5. THE DRAWINGS SCHEMATICALLY SHOW THE GENERAL DESIGN ARRANGEMENT AND THE EXTENT OF THE SYSTEM. CONTRACTOR TO FIELD VERIFY AND MAKE ALTERATIONS AS NECESSARY TO MAKE THE SYSTEM COMPLETE AND OPERATION IN ACCORDANCE WITH THE DESIGN INTENT.
6. COORDINATE DISPOSAL OF ALL ELECTRICAL ITEMS REMOVED DURING DEMOLITION WITH THE OWNER'S REPRESENTATIVE.
7. THE CONTRACTOR SHALL PERFORM THE WORK IN A MANNER THAT WILL CAUSE A MINIMUM DISRUPTION TO BUILDING TENANT USE AND SHALL COORDINATE THE WORK WITH THE BUILDING OWNER'S REPRESENTATIVE.
8. ANY SHUTDOWNS REQUIRED TO DE-ENERGIZE EQUIPMENT ARE TO BE COORDINATED WITH THE OWNER.
9. UPON COMPLETION OF WORK, REMOVE ALL SURPLUS MATERIALS AND RUBBISH. MAKE ALL REQUIRED PATCHING AND REPAIRS OF OTHER TRADES' WORK DAMAGED BY THIS CONTRACTOR, AND LEAVE THE PREMISES IN A CLEAN, ORDERLY CONDITION.
10. THE CONTRACTOR SHALL FIELD VERIFY THE EXISTING CONDITIONS AND COORDINATE WITH THE ARCHITECT AND GENERAL CONTRACTOR AS REQUIRED TO ENSURE THAT THERE IS ADEQUATE SPACE FOR INSTALLATION AND SERVICE.
11. UNLESS NOTED OTHERWISE, MOUNT RECEPTACLES AT 18 INCHES AND SWITCHES AT 42 INCHES ABOVE THE FLOOR. COORDINATE ALL RECEPTACLE LOCATIONS WITH ASSOCIATED CABINETRY AND WORK PLANE HEIGHTS. RECEPTACLES SHALL BE SPECIFICATION GRADE.
12. RECEPTACLES AND JUNCTION BOXES FOR DEDICATED USES ARE SHOWN IN APPROXIMATE LOCATIONS. COORDINATE WITH EQUIPMENT SUPPLIERS AND ARCHITECT FOR EXACT LOCATIONS.
13. WIRING FOR ELECTRICAL DEVICES IS NOT SHOWN ON THESE PLANS. INSTEAD, ELECTRICAL DEVICES IN EACH ROOM ARE TAGGED WITH THE SOURCE PANELBOARD AND CIRCUIT NUMBER THAT FEEDS THE DEVICE IN THAT ROOM. DEVICES WITH THE SAME CIRCUIT SHALL BE DAISY-CHAINED.
14. VERIFY ALL WORK CONDITIONS PRIOR TO COMMENCING WORK, INCLUDING, BUT NOT LIMITED TO: DIMENSIONS, EQUIPMENT, STRUCTURAL ELEMENTS & MATERIALS INDICATED AS EXISTING. COORDINATE AMONG DISCIPLINES AND EQUIPMENT SUPPLIERS FOR INSTALLATION OF ALL MATERIALS & EQUIPMENT, ETC.
15. THIS IS A STANDARD LEGEND SHEET. THEREFORE, SOME SYMBOLS OR ABBREVIATIONS MAY APPEAR ON THIS SHEET AND NOT ON THE PLANS.
16. ITEMS SHOWN BOLD ON THESE DRAWINGS REPRESENT WORK THAT IS PART OF THIS CONTRACT. BOLD TEXT ASSOCIATED WITH EQUIPMENT SHOWN AS THIN DESCRIBES WORK TO BE PERFORMED ON THE EQUIPMENT AS PART OF THE CONTRACT.

DRAWING LIST

NOT FOR CONSTRUCTION
REFERENCE GENERAL NOTE 1 ON E1.00

WILLOW WIND RENOVATIONS

1497 E. MAIN ST.
ASHLAND, OR 97520

arkitek:
design and architecture, llc.

426 a street
ashland, or 97520
tel.: 541.591.9988

ArcSine engineering
A full-spectrum engineering company
950 Executive Way | Redding, CA 96002 | (530)222-7204
1236 Disk Drive | Medford, OR 97501 | (541)842-4188
www.arc-sine.com

REGISTERED PROFESSIONAL ENGINEER
17,004
OREGON
JAN. 18, 1994
DOUGLAS C. McHANEY
EXPIRATION DATE: 12/31/22

Revision	Date

Date	02/01/2021
Job	2025
Drawn By	MAH
Checked By	
Scale	NTS

100%DD

Drawing Title

LEGEND & GENERAL NOTES
ELECTRICAL

Drawing No.

E1.00

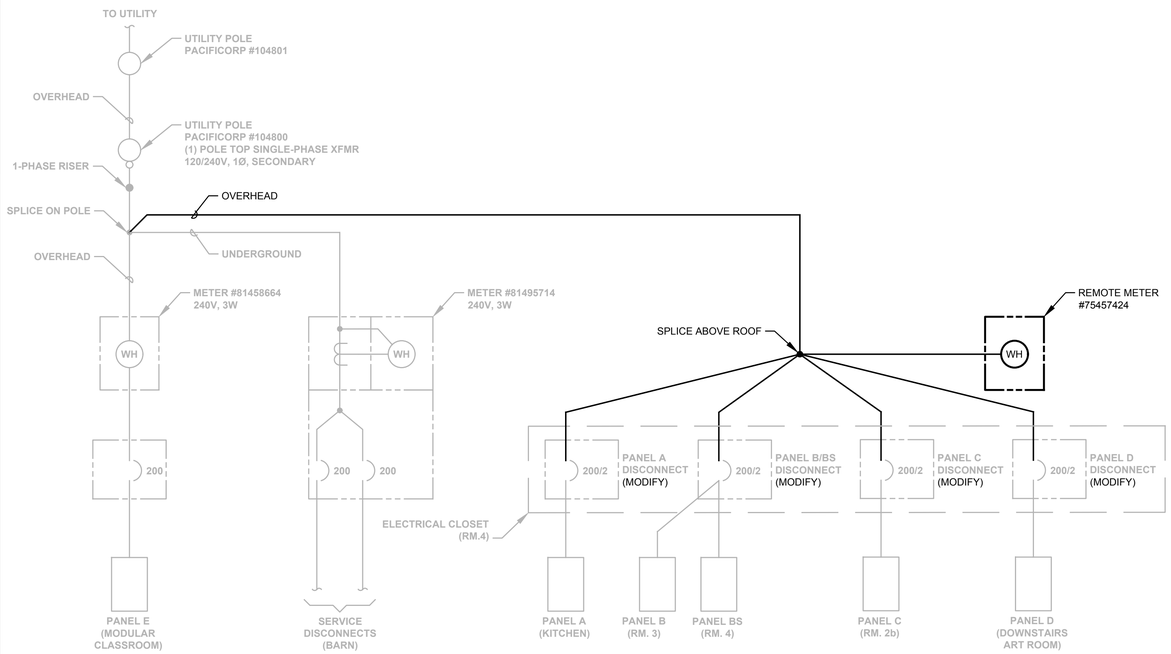

1 ONE-LINE DIAGRAM - DEMOLITION

NTS

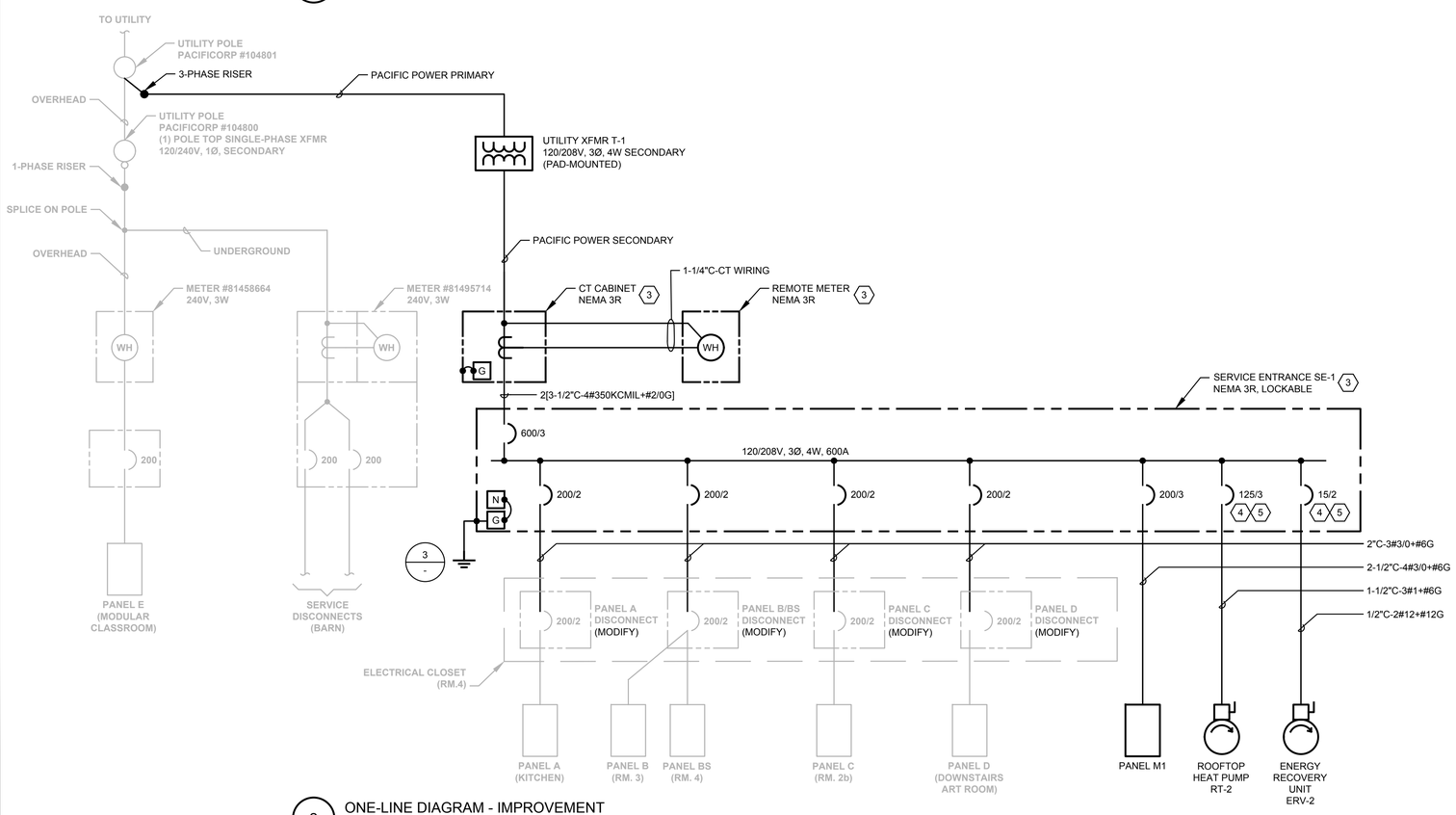

2 ONE-LINE DIAGRAM - IMPROVEMENT

NTS

SE-1 LOAD SUMMARY

GIVEN:					
Supply Voltage	208 /120V, 3 Phase, 4 Wire				
BUILDING AREA	7,500 SF				
Existing Loads	Amps	Volts	Phase		
PANEL A	160.0	120	1		19,200 VA
PANEL B/BS	160.0	120	1		19,200 VA
PANEL C	160.0	120	1		19,200 VA
PANEL D	160.0	120	1		19,200 VA
				Subtotal Existing Loads	**76,800 VA**
New Loads	Amps	Volts	Phase		
PANEL M1	SEE PANEL SCHEDULE				61,608 VA
ENERGY RECOVERY UNIT ERV-2	3.1	208	1		645 VA
ROOFTOP HEAT PUMP RT-2	121.0	208	3		43,592 VA
				Subtotal New Loads	**105,845 VA**
TOTAL DEMAND LOAD					**182,645 VA**
REQUIRED AMPACITY					**507 A**
EQUIPMENT BUS					**600 A**
FEEDER AMPACITY					**600 A**

LOAD SUMMARY NOTE:

THE DESIGN-BUILD CONTRACTOR SHALL DEVELOP DETAILED LOAD CALCULATIONS, PREPARED BY AN OREGON PROFESSIONAL REGISTERED ELECTRICAL ENGINEER. PACIFIC POWER, THE SERVING UTILITY, DUE TO HEAVY WORKLOAD FROM FIRES IN THE AREA, DID NOT PROVIDE PEAK HISTORIC LOAD INFORMATION. THIS CONCEPTUAL DESIGN IS BASED ON ASSUMPTIONS REGARDING EXISTING PEAK LOADS AND THESE ASSUMPTIONS ARE UNVERIFIED. THE DESIGN-BUILD ELECTRICAL ENGINEER SHALL PROCEED WITH CALCULATIONS BASED ON VERIFIED PEAK LOADS, CONNECTED LOADS, OR OTHER MEANS WHICH MEET THE STANDARD OF CARE FOR ENGINEERED ELECTRICAL LOAD CALCULATIONS.

SHEET NOTES

A. SEE LEGEND AND GENERAL NOTES ON SHEET E1.0.

KEY NOTES

1. METAL GAS PIPING SHALL BE BONDED TO THE GROUNDING ELECTRODE SYSTEM BUT IS NOT PART OF THE GROUNDING ELECTRODE SYSTEM, PER NEC 250.52 (B) AND 250.104(B).
2. SECOND SUPPLEMENTARY GROUND IS NOT REQUIRED IF A SINGLE GROUND ROD HAS A RESISTANCE OF 25 OHMS OR LESS. NEC 250.53(A)(3) EXCEPTION.
3. PROVIDE/INSTALL NOTED CT CABINET AND REMOTE METER PER PACIFIC POWER ESR MANUAL (2016) CHAPTER 9. OBTAIN WRITTEN APPROVAL OF EQUIPMENT AND LAYOUT FROM PACIFIC POWER PRIOR TO ORDERING OR INSTALLING EQUIPMENT.
4. PROVIDE HACR RATED BREAKER.
5. COORDINATE BREAKER REQUIREMENTS WITH MANUFACTURER OF NOTED EQUIPMENT PRIOR TO ORDERING POWER DISTRIBUTION EQUIPMENT.

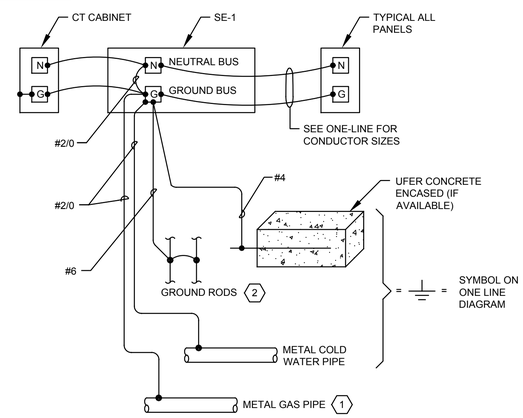

3 GROUNDING ELECTRODE WIRING DIAGRAM

NTS

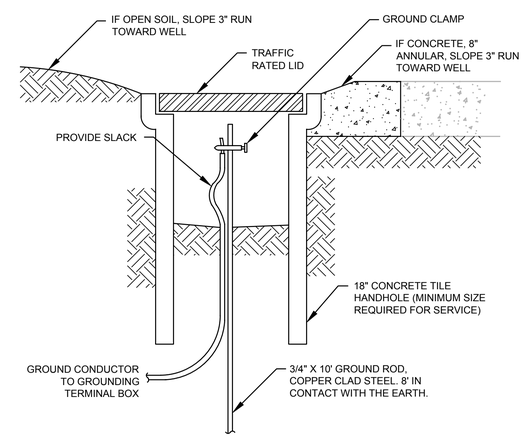

NOTES:

1. GROUND ROD MAY BE INSTALLED IN THE EQUIPMENT PAD UNDER THE SERVICE ENTRANCE SECTION OF THE ENCLOSURE (ROD SHALL EXTEND 3" ABOVE THE PAD, MINIMUM). IF SO INSTALLED, TILE, COVER & ANNULAR PAD MAY BE ELIMINATED.

NOT FOR CONSTRUCTION
REFERENCE GENERAL NOTE 1 ON E1.00

4 GROUND ROD

NTS

WILLOW WIND RENOVATIONS

1497 E. MAIN ST.
ASHLAND, OR 97520

arkitek:
design and
architecture, llc.

426 a street
ashland, or 97520
tel.: 541.591.9988

ArcSine engineering
A full-spectrum engineering company
950 Executive Way | Redding, CA 96002 | (530)222-7204
1236 Disk Drive | Medford, OR 97501 | (541)842-4188
www.arc-sine.com

REGISTERED PROFESSIONAL ENGINEER
17,004
OREGON
JAN. 18, 1994
DOUGLAS C. McHANEY
EXPIRATION DATE: 12/31/22

Revision	Date

Date	02/01/2021
Job	2025
Drawn By	MAH
Checked By	
Scale	NTS

100%DD

Drawing Title

ONE-LINE DIAGRAM
ELECTRICAL

Drawing No.

E2.00

SHEET NOTES

A. SEE LEGEND AND GENERAL NOTES ON SHEET E1.0.

B. SEE NOTES ON INDIVIDUAL PANEL SCHEDULES.

C. EXCEPT WHERE OTHERWISE NOTED, CONDUCTORS SHALL BE STRANDED WITH THWN INSULATION AND SHALL BE INSTALLED IN CONDUIT EXCEPT SOLID CONDUCTORS MAY BE USED FOR 15, 20, 25, AND 30 AMP BRANCH CIRCUITS. USE COPPER EXCEPT WHERE ALUMINUM (AL) IS INDICATED. FOR COPPER BRANCH WIRING USE THE FOLLOWING WIRE SIZES EXCEPT WHERE OTHERWISE INDICATED:

CIRCUIT PROTECTION (AMPS)	15	20	25	30	35	40	45	50	60	70
COPPER WIRE SIZE (AWG)	12	12	10	10	8	8	6	6	4	4
GROUNDING WIRE SIZE (AWG)	12	12	10	10	10	10	10	10	10	8
CONDUIT SIZE (EMT)	1/2"	1/2"	1/2"	1/2"	3/4"	3/4"	1"	1"	1 1/4"	1 1/4"

CIRCUIT PROTECTION (AMPS)	80	90	100	110	125	150	175	200	225	250
COPPER WIRE SIZE (AWG)	3	2	1	1	1/0	1/0	2/0	3/0	4/0	250
GROUNDING WIRE SIZE (AWG)	8	8	8	6	6	6	6	6	4	4
CONDUIT SIZE (EMT)	1 1/4"	1 1/4"	1 1/2"	1 1/2"	1 1/2"	1 1/2"	2"	2"	2 1/2"	2 1/2"

DO NOT SHARE NEUTRALS IN BRANCH CIRCUIT WIRING.

KEY NOTES

PANEL M1

STATUS:	NEW	LINE-TO-NEUTRAL VOLTAGE:	120 V	MCB	200 A
BUS RATING (A):	200	LINE-TO-LINE VOLTAGE:	208 V	FAULT RATING:	kAIC
MOUNTING:	SURFACE	ENCLOSURE RATING:	NEMA 3R	LOCATION:	BLDG. EXTERIOR

JOB NAME: WILLOW WIND
ARCSINE NUMBER: 2025
DATE: 2/1/2021

	Description	Category	Line Amps	Ph-A kVA	Ph-B kVA	Ph-C kVA	Bkr. Size	Ckt. No.	Phase A B C	Ckt. No.	Bkr. Size	Ph-A kVA	Ph-B kVA	Ph-C kVA	Line Amps	Category	Description
NOTES 1 & 2	ROOFTOP HEAT PUMP RT-1	7	68.0	8.2			70	1		2	15	0.3			2.1	7	ENERGY RECOVERY UNIT ERV-1 NOTES 1 & 2
	↓	7	68.0		8.2			3		4			0.3		2.1	7	↓
	↓	7	68.0			8.2		5		6	20			0.6	5.0	3	EXHAUST FAN EF-1
NOTES 1 & 2	HEAT PUMP HP-1	7	36.0	4.3			50	7		8	20	0.6			5.0	3	EXHAUST FAN EF-2
	↓	7	36.0		4.3			9		10	15		0.4		3.5	7	ENERGY RECOVERY UNIT ERV-3 NOTES 1 & 2
NOTES 1 & 2	HEAT PUMP HP-2	7	28.0			3.4	40	11		12				0.4	3.5	7	↓
	↓	7	28.0	3.4				13		14	15	0.7			5.6	7	FAN COIL FC-1 NOTES 1 & 2
NOTES 1 & 2	HEAT PUMP HP-3	7	28.0		3.4		40	15		16			0.7		5.6	7	↓
	↓	7	28.0			3.4		17		18	20			0.9	7.5	2	SERVICE RECEPTS.
NOTES 1 & 2	HEAT PUMP HP-4	7	46.5	5.6			50	19		20	20						SPARE
	↓	7	46.5		5.6			21		22	20						SPARE
	SPARE						20	23		24	20						SPARE
	SPARE						20	25		26	20						SPARE
	SPACE							27		28							SPACE
								29		30							
								31		32							
								33		34							
								35		36							
								37		38							
								39		40							
								41		42							
	Subtotal kVA			21.4	21.4	14.9				Subtotal kVA		1.5	1.3	1.9			
	Subtotal Amps			178.5	178.5	124.0				Subtotal Amps		12.7	11.2	16.0			

Load Summary

Connected Load				Demand Load			
Category	Description	Load		Description	Factor	Load	
1	Lighting	0	kVA	Lighting	1.25	0	kVA
2	Receptacles < 10 kVA	0.9	kVA	Receptacles < 10 kVA	1.0	0.9	kVA
2	Receptacles > 10 kVA	0	kVA	Receptacles > 10 kVA	0.5	0	kVA
3	Miscellaneous non-continuous	1.2	kVA	Misc. non-continuous	1.0	1.2	kVA
4	Miscellaneous continuous	0	kVA	Misc. continuous	1.25	0	kVA
5	Largest motor	0	kVA	Largest Motor	1.25	0	kVA
6	Sub panel feeder	0	kVA	Sub Panel Feeder	1.0	0	kVA
7	HVAC Equipment	60.41	kVA	HVAC Equipment	1.0	60.41	kVA
	Total connected kVA	62.51	kVA	Total demand kVA		62.51	kVA
	Average connected Amps	173.5	A	Average demand Amps		173.5	A
	Total Demand without lights or receptacles					61.61	kVA
	Total Demand without lights, receptacles, or sub-panels					61.61	kVA

Notes:
1. PROVIDE HACR RATED BREAKER.
2. COORDINATE BREAKER REQUIREMENTS WITH MANUFACTURER OF NOTED EQUIPMENT PRIOR TO ORDERING POWER DISTRIBUTION EQUIPMENT.

NOT FOR CONSTRUCTION
REFERENCE GENERAL NOTE 1 ON E1.00

WILLOW WIND RENOVATIONS

1497 E. MAIN ST.
ASHLAND, OR 97520

arkitek:
design and architecture, llc.

426 a street
ashland, or 97520
tel.: 541.591.9988

ArcSine engineering
A full-spectrum engineering company
950 Executive Way | Redding, CA 96002 | (530)222-7204
1236 Disk Drive | Medford, OR 97501 | (541)842-4188
www.arc-sine.com

REGISTERED PROFESSIONAL ENGINEER
17.004
OREGON
JAN. 18, 1994
DOUGLAS C. McHANEY
EXPIRATION DATE: 12/31/22

Revision	Date

Date	02/01/2021
Job	2025
Drawn By	MAH
Checked By	
Scale	NTS

100%DD

Drawing Title
PANEL SCHEDULES
ELECTRICAL

Drawing No.
E2.01

SHEET NOTES

A. SEE LEGEND AND GENERAL NOTES ON SHEET E1.0.

KEY NOTES

1. EXISTING NON-POWER UTILITIES (PHONE, CATV, INTERNET, ETC.) ROUTED OVERHEAD WITH NOTED SERVICE LATERAL SHALL REMAIN.

UTILITY COORDINATION AND DEMOLITION/CONNECTION REQUIREMENTS

UTILITY	UTILITY SPECIFIC COORDINATION AND DEMOLITION/CONNECTION REQUIREMENTS	COORDINATION REQUIREMENTS
PACIFIC POWER	PACIFIC POWER RESPONSIBILITIES: -DEMOLISH EXISTING SINGLE-PHASE OVERHEAD UTILITY SERVICE FROM PACIFICORP POLE #104602 TO POLE #104801. -DEMOLISH EXISTING SINGLE-PHASE OVERHEAD SERVICE LATERAL. -REMOVE EXISTING METER. -FURNISH/INSTALL NEW THREE-PHASE OVERHEAD UTILITY SERVICE FROM PACIFICORP POLE #104602 TO POLE #104801. -FURNISH/INSTALL NEW THREE-PHASE UNDERGROUND SERVICE LATERAL. -FURNISH/INSTALL NEW METER. -FURNISH/INSTALL NEW TRANSFORMER. CONTRACTOR RESPONSIBILITIES: -ELECTRICAL • DESIGN -DEMOLISH SERVICE CONDUITS/BOXES. -DEMOLISH METER BASE. -DEMOLISH EXISTING SERVICE ENTRANCE. -FURNISH/INSTALL NEW SERVICE CONDUITS/BOXES. -FURNISH/INSTALL NEW METER BASE. -FURNISH/INSTALL NEW SERVICE ENTRANCE. -FURNISH/INSTALL NEW TRANSFORMER VAULT.	IN ADDITION TO REQUIREMENTS SHOWN ON THESE DRAWINGS FOR ELECTRIC UTILITY SERVICES, ALSO PERFORM THE FOLLOWING COORDINATION DURING CONSTRUCTION FOR THESE UTILITIES: -CONTACT UTILITY. -CONFIRM LOCATIONS OF SERVICES. -CONFIRM SCOPE OF "OWNER" - PROVIDED ASPECTS (WHICH ARE TO BE CONTRACTOR PROVIDED). -COMPLETE ALL REQUIRED FORMS ON THE OWNER'S BEHALF. -COORDINATE FEES AND OBTAIN OWNER FUNDING (PAYING THE FEES IS NOT IN THE CONTRACTOR'S SCOPE). -COORDINATE WITH UTILITIES FOR FINAL INSPECTION AND APPROVAL OF CONDUIT AND EQUIPMENT INSTALLATIONS. VERIFY LOCATIONS OF EXISTING UTILITIES FOR FINAL CONDUIT TERMINATION. -COORDINATE DEMOLITION ACTIVITIES WITH THE UTILITIES.

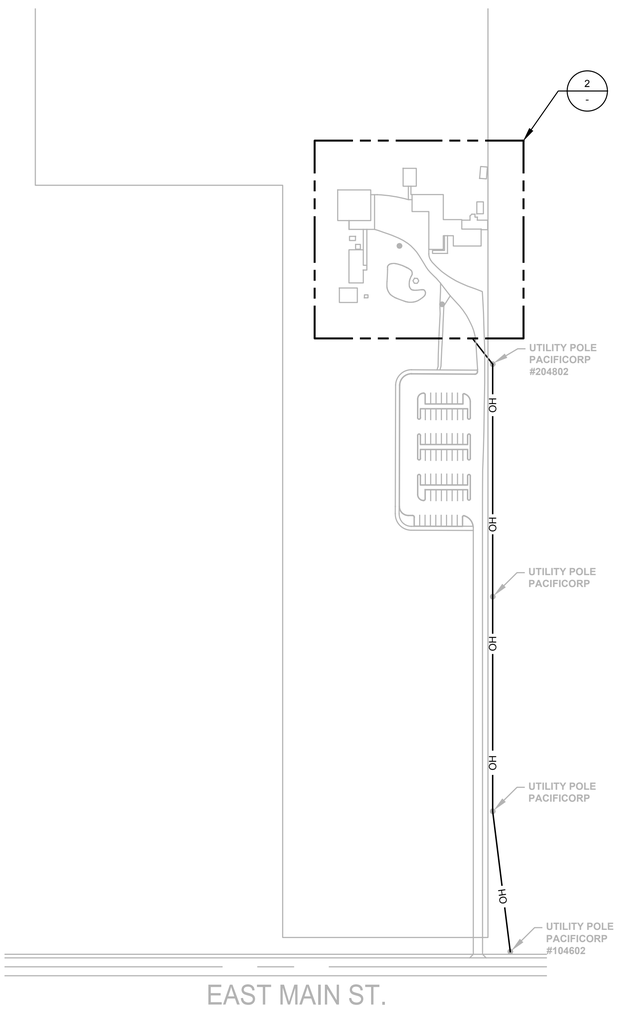

1 OVERALL SITE PLAN - DEMOLITION & IMPROVEMENT

SCALE: 1"=100'-0"

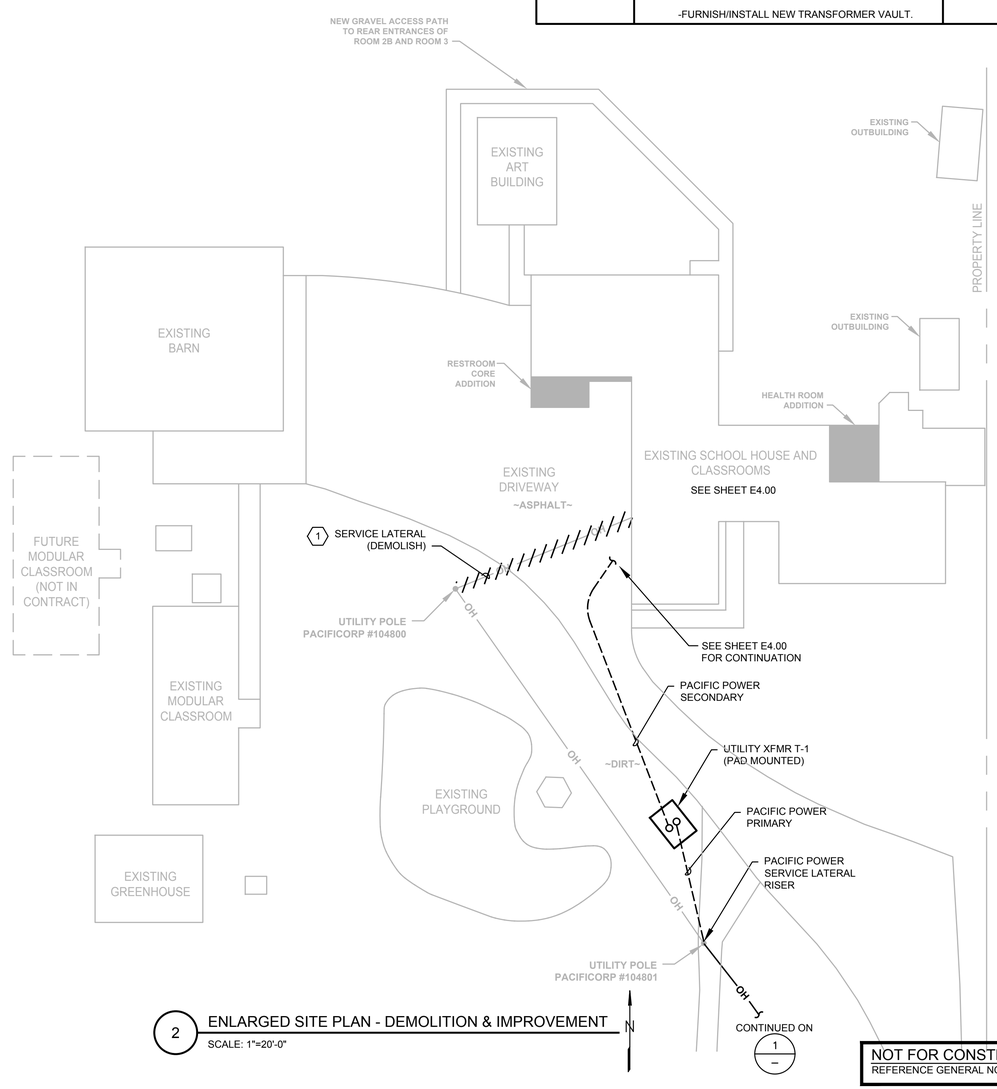

2 ENLARGED SITE PLAN - DEMOLITION & IMPROVEMENT

SCALE: 1"=20'-0"

NOT FOR CONSTRUCTION
REFERENCE GENERAL NOTE 1 ON E1.00

1 INCH

BAR EQUALS ONE INCH WHEN DRAWING IS PLOTTED FULL SIZE. IF NOT, SCALE ACCORDINGLY

WILLOW WIND RENOVATIONS

1497 E. MAIN ST.
ASHLAND, OR 97520

arkitek:
design and architecture, llc.

426 a street
ashland, or 97520
tel.: 541.591.9988

ArcSine engineering
A full-spectrum engineering company
950 Executive Way | Redding, CA 96002 | (530)222-7204
2236 Diak Drive | Medford, OR 97501 | (541)642-4188
www.arc-sine.com

REGISTERED PROFESSIONAL ENGINEER
17,004
D. McHaney
OREGON
JAN. 18, 1994
DOUGLAS C. McHANEY
EXPIRATION DATE: 12/31/22

Revision	Date

Date	02/01/2021
Job	2025
Drawn By	MAH
Checked By	
Scale	NTS

100%DD

Drawing Title

SITE PLAN - DEMO/IMPROVEMENT
ELECTRICAL

Drawing No.

E3.00

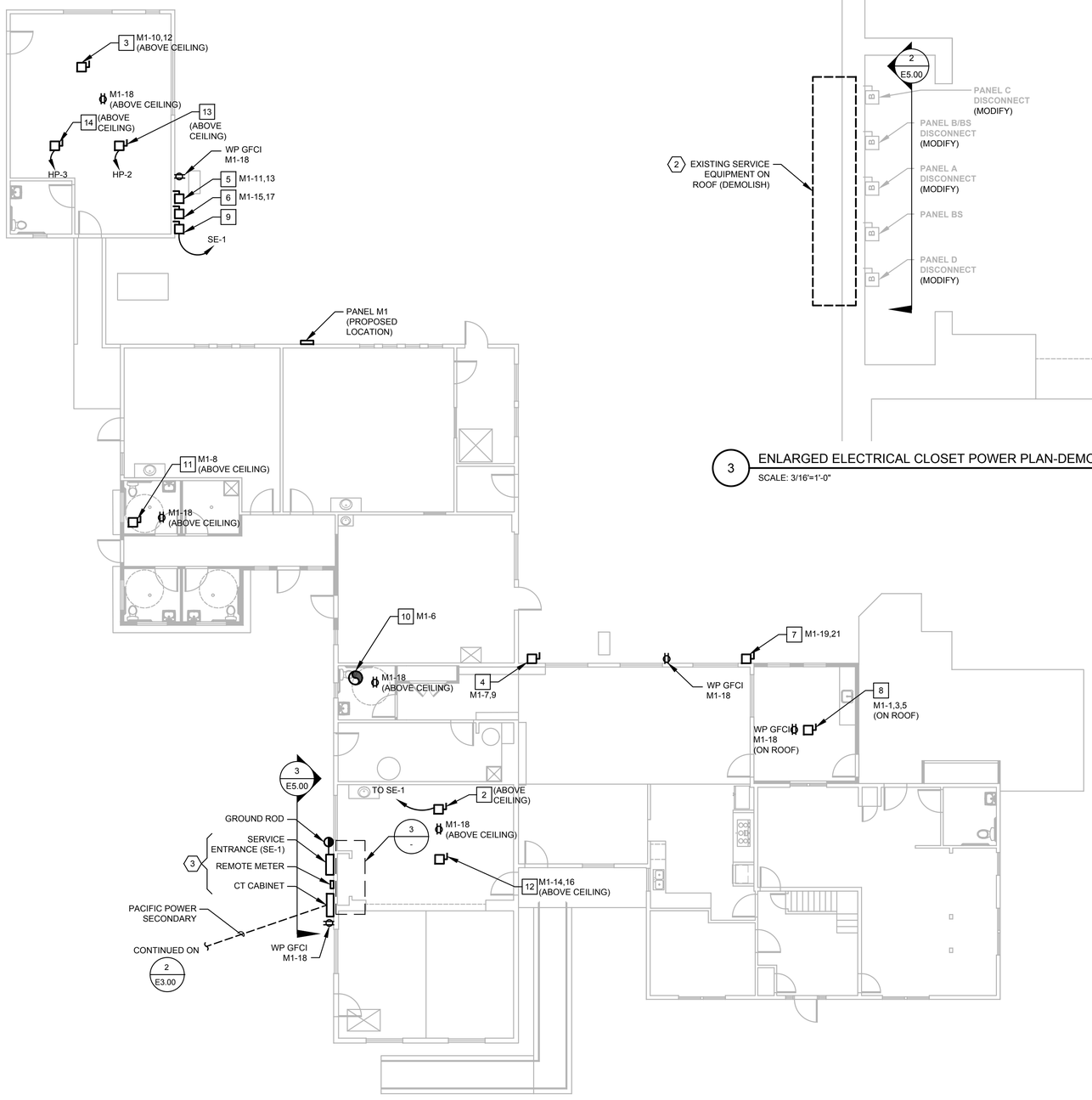

1 FIRST FLOOR POWER PLAN - DEMO/IMPROVEMENT

SCALE: 1/8'=1'-0"

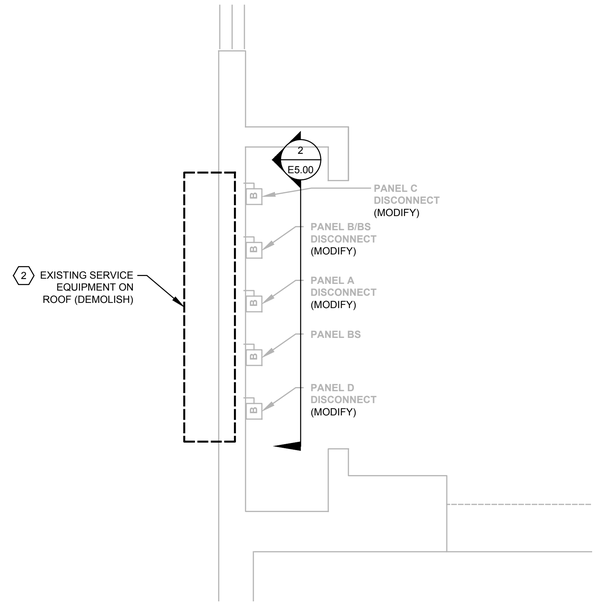

3 ENLARGED ELECTRICAL CLOSET POWER PLAN-DEMO/IMPROVEMENT

SCALE: 3/16'=1'-0"

KEY EQUIPMENT. (1)

1	ERV-1
2	ERV-2
3	ERV-3
4	HP-1
5	HP-2
6	HP-3
7	HP-4
8	RT-1
9	RT-2
10	EF-1
11	EF-2
12	FC-1
13	FC-2
14	FC-3
15	FC-41
16	FC-42
17	FC-43

SHEET NOTES

A. SEE LEGEND & GENERAL NOTES ON SHEET E1.0.

B. SEE MECHANICAL DRAWINGS FOR HVAC THERMOSTAT CONTROL WIRING.

C. ALL POWER WIRES SHALL BE #12 UNLESS OTHERWISE NOTED. SEE TABLE ON SHEET E2.0.

D. FOR HVAC ITEMS, FEED THE LOADS FROM CIRCUITS INDICATED. CONDUCTOR SIZES SHALL BE AS RECOMMENDED BY THE EQUIPMENT MANUFACTURER, BUT IN NO CASE SHALL CONDUCTORS BE SMALLER THAN WHAT IS CALLED FOR ON THE PANEL SCHEDULES.

KEY NOTES

1. NOTED KEY EQUIPMENT POWER LOCATIONS ARE APPROXIMATE. DURING CONSTRUCTION, COORDINATE WITH THE EQUIPMENT SUPPLIER, OWNER, AND ARCHITECT FOR FINAL LOCATIONS AND MOUNTING HEIGHTS OF ALL LISTED EQUIPMENT.

2. DEMOLITION OF EXISTING UTILITIES, SEE SHEET E2.00, E3.00, AND E5.00 FOR ADDITIONAL REQUIREMENTS.

3. NEW UTILITY EQUIPMENT, SEE SHEET E2.00, E3.00, AND E5.00 FOR ADDITIONAL REQUIREMENTS.

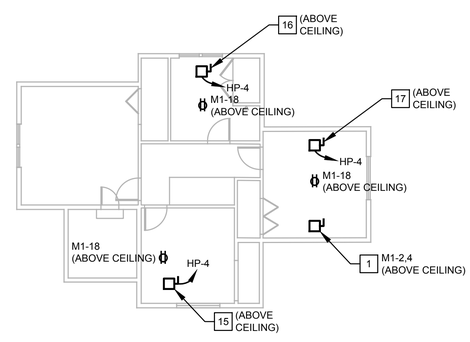

2 SECOND FLOOR POWER PLAN - DEMO/IMPROVEMENT

SCALE: 1/8'=1'-0"

NOT FOR CONSTRUCTION
REFERENCE GENERAL NOTE 1 ON E1.00

1 INCH

BAR EQUALS ONE INCH WHEN DRAWING IS PLOTTED FULL SIZE. IF NOT, SCALE ACCORDINGLY

WILLOW WIND RENOVATIONS

1497 E. MAIN ST.
ASHLAND, OR 97520

arkitek: design and architecture, llc.
426 a street
ashland, or 97520
tel.: 541.591.9988

ArcSine engineering
A full-spectrum engineering company
950 Executive Way | Redding, CA 96002 | (530)222-7204
1236 Disk Drive | Medford, OR 97501 | (541)842-4188
www.arc-sine.com

REGISTERED PROFESSIONAL ENGINEER 17,004 OREGON JAN. 18, 1994 DOUGLAS C. McHANEY

EXPIRATION DATE: 12/31/22

Revision	Date

Date	02/01/2021
Job	2025
Drawn By	MAH
Checked By	
Scale	AS NOTED

100%DD

Drawing Title

POWER PLAN - DEMO/IMPROVEMENT
ELECTRICAL

Drawing No.

E4.00

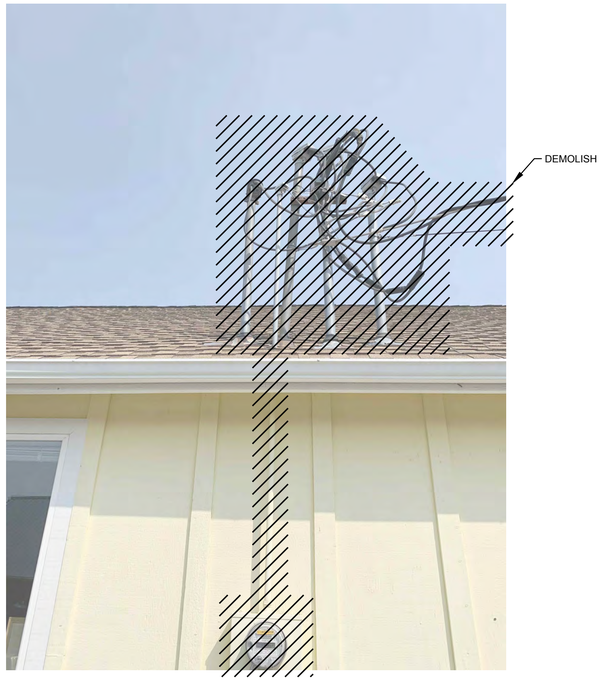

1 ELECTRICAL SERVICE ELEVATION-DEMOLITION
NTS

2 ELECTRICAL CLOSET ELEVATION-DEMOLITION
NTS

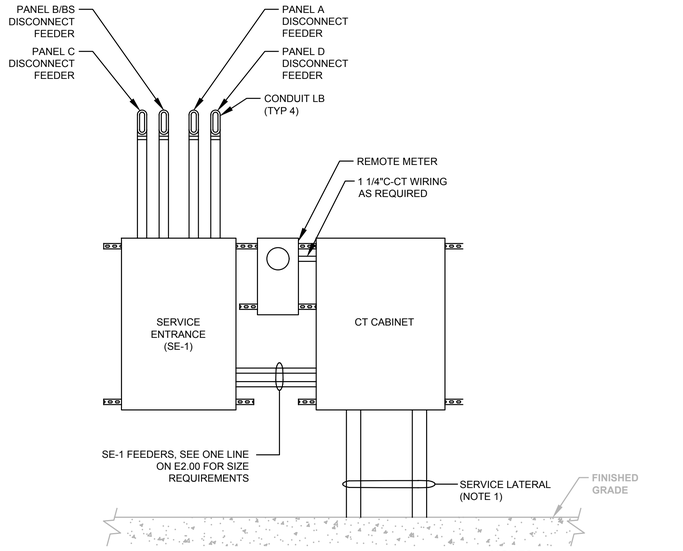

3 SE-1 ELEVATION - IMPROVEMENT
NTS

NOTES:

1. COORDINATE WITH UTILITY FOR SERVICE LATERAL CONDUIT SIZES/QUANTITIES.

NOT FOR CONSTRUCTION
REFERENCE GENERAL NOTE 1 ON E1.00

WILLOW WIND RENOVATIONS

1497 E. MAIN ST.
ASHLAND, OR 97520

arkitek:
design and architecture, llc.

426 a street
ashland, or 97520
tel.: 541.591.9988

ArcSine engineering
A full-spectrum engineering company
950 Executive Way | Redding, CA 96002 | (530)222-7204
236 Disk Drive | Medford, OR 97501 | (541)842-4188
www.arc-sine.com

REGISTERED PROFESSIONAL ENGINEER
17.004
OREGON
JAN. 18, 1994
DOUGLAS C. McHANEY
EXPIRATION DATE: 12/31/22

Revision		Date

Date	02/01/2021
Job	2025
Drawn By	MAH
Checked By	
Scale	NTS

100%DD

Drawing Title
DETAILS
ELECTRICAL

Drawing No.
E5.00

DUCT & FITTING SYMBOLS

DOUBLE LINE	SINGLE LINE	DESCRIPTION
SA		SUPPLY AIR
RA		RETURN AIR
OSA		OUTSIDE AIR
EA		EXHAUST AIR
ERA		ECONOMIZER RELIEF AIR
12x12	12x12	RECTANGULAR DUCT SIZE FIRST NUMBER INDICATES VISIBLE DIMENSION AND SECOND NUMBER INDICATES HIDDEN DIMENSION. ALL DIMENSIONS ARE INCHES.
12"Ø	12"Ø	ROUND DUCT DIAMETER
48x18Ø	48x18Ø	FLAT OVAL DUCT
		SUPPLY DUCT UP OR SECTION
		SUPPLY DUCT DOWN OR SECTION AWAY
		RETURN OR OSA DUCT UP OR SECTION
		RETURN OR OSA DUCT DOWN OR SECTION
		EXHAUST DUCT UP OR SECTION
		EXHAUST DUCT DOWN OR SECTION
		TRANSITION
SQR RND		SQUARE TO ROUND TRANSITION
		FLANGED TAKEOFF (RECTANGULAR DUCT)
		LATERAL HIGH EFFICIENCY TAKE-OFF FITTING W / VD (SQR TO RND TAKEOFF FROM RECTANGULAR MAIN)
		VD ON BRANCH DUCT
		CONICAL 90° TAKE-OFF (ROUND / OVAL DUCT)
		45° LATERAL TAKE-OFF (ROUND / OVAL DUCT)
R		DUCT SLOPE UP (RISE)
D		DUCT SLOPE DOWN (DROP)
		END CAP
		RECTANGULAR MITERED ELBOW W/ TURNING VANES
		RECTANGULAR TEE - 90° MITERED ELBOWS W/ TURNING VANES
R, D or W	R	90° OR 45° LONG RADIUS ELBOW, R=1.5 DIA OR WIDTH (ROUND OR RECTANGULAR DUCT)

HVAC SYMBOLS & ABBREVIATIONS

	DUCT WITH INTERNAL ACOUSTICAL INSULATION
AD	ACCESS DOOR
	VOLUME DAMPER
FSD	COMBINATION FIRE / SMOKE DAMPER
FD	FIRE DAMPER
FD	VERTICAL FIRE DAMPER
M	MOTORIZED DAMPER
BD	BACKDRAFT DAMPER
	OPPOSED BLADE DAMPER
	PARALLEL BLADE DAMPER
	FLEXIBLE DUCT CONNECTION
	FLEXIBLE DUCT
	DIRECTION OF AIRFLOW
	SUPPLY DIFFUSER
	RETURN GRILLE
	EXHAUST GRILLE
	PRESSURE RELIEF GRILLE
	WALL OR DUCT REGISTER OR GRILLE
or	LINEAR DIFFUSER
	FILTER
AD	CEILING ACCESS DOOR
T	TEMPERATURE GAUGE
P	PRESSURE GAUGE
XX / XXX	OUTLET / INLET TAG
(F) XXX	AIRFLOW, CFM
(F)	PREFIX (F) INDICATES A FIRE RATED GRILLE, REGISTER, OR DIFFUSER
H	HUMIDISTAT OR HUMIDITY SENSOR
T	THERMOSTAT OR TEMP SENSOR
D	DUCT SMOKE DETECTOR
SD	SMOKE DETECTOR
SP	STATIC PRESSURE SENSOR
CO2	CARBON DIOXIDE SENSOR
ES	EMERGENCY SWITCH

GENERAL SYMBOLS

(C)	CAP FOR FUTURE
	POINT OF NEW CONNECTION
X	REVISION NUMBER
XX	POINT OF CONTINUATION
XX / XX	EQUIPMENT TAG EQUIPMENT NUMBER
1 / -	SECTION (LETTER) OR DETAIL (NUMERICAL) DESIGNATION SHEET NUMBER
1 / -	SECTION DESIGNATION SHEET NUMBER
GPM X"	PIPE SIZE AND FLOW TAG
	GENERAL BREAK
	LINE BREAK
	ON DEMOLITION PLANS, INDICATES ITEMS TO BE REMOVED
1	KEYED NOTES
(E)	EXISTING
(F)	FUTURE

PIPE SYMBOLS

R	REFRIGERANT PIPING
NG	NATURAL GAS PIPING
CHWS	CHILLED WATER SUPPLY
CHWR	CHILLED WATER RETURN
CD	CONDENSATE DRAIN PIPING
HWS	HOT WATER SUPPLY
HWR	HOT WATER RETURN
	DIRECTION OF FLOW
	CHANGE IN SIZE
	PIPE DOWN
	PIPE UP
	TEE DOWN
	TEE UP
	CAP
	PIPE UNION
	GATE VALVE
	BALL VALVE
	PRESSURE GAUGE
T	TEMPERATURE GAUGE GAUGE
	PRESSURE REDUCING VALVE
	PRESSURE & TEMPERATURE GAUGE PORT
	BALANCING VALVE
	PUMP
	GLOBE VALVE
	CHECK VALVE
	SAFETY RELIEF VALVE
	TWO WAY CONTROL VALVE
	THREE WAY CONTROL VALVE
	STRAINER
	STEAM CONDENSATE TRAP

NOTE: ABBREVIATIONS AND SYMBOLS ARE ARCSINE ENGINEERING STANDARDIZED SYMBOL LEGENDS. AS SUCH, ALL SYMBOLS SHOWN MAY NOT APPEAR ON OR WITHIN THIS SET OF CONTRACT DOCUMENTS.

GENERAL NOTES

1. DESIGN/BUILD NOTES:
   A. THESE DRAWINGS AND SPECIFICATIONS ARE FOR THE DIVISION 23 CONTRACTOR TO ENGINEER, DESIGN, BID AND INSTALL A HEATING, AIR CONDITIONING AND VENTILATION SYSTEM PER THE DESIGN INTENT SHOWN.
   B. ALL EQUIPMENT, DUCTWORK, COMPONENT AND ACCESSORY SIZES, CAPACITIES, AND TYPES SHOWN IN THESE DRAWINGS AND SPECIFICATIONS SHALL BE ADHERED TO.
   C. THE CONTRACTOR SHALL DESIGN AND INSTALL A COMPLETE AND FULLY OPERATIONAL SYSTEM.
   D. DESIGN AND AS-BUILT DRAWINGS SHOWING ALL EQUIPMENT, COMPONENTS, PIPING, AND CONTROLS SHALL BE PREPARED TO THE SAME SCALE AS THESE DRAWINGS. AS-BUILT DRAWINGS SHALL BE DRAWN IN AutoCAD. ELECTRONIC COPIES SHALL BE PROVIDED TO THE OWNER AND ARCHITECT/ENGINEER.
2. THE ENTIRE INSTALLATION SHALL CONFORM TO THE REQUIREMENTS OF THE MOST RECENTLY ADOPTED BUILDING CODE, MECHANICAL CODE, PLUMBING CODE, ELECTRICAL CODE, AND ALL OTHER APPLICABLE CITY, COUNTY, STATE, AND FEDERAL CODES AND REGULATIONS IN EFFECT AT THE DATE OF THE BID. WHEREVER THE REQUIREMENTS OF THE SPECIFICATIONS OR DRAWINGS EXCEED THOSE OF THE ITEMS ABOVE, THE REQUIREMENTS OF THE SPECIFICATIONS OR DRAWINGS SHALL GOVERN.
3. ALL DUCTWORK SHALL BE GALVANIZED STEEL, ROUND OR RECTANGULAR. GAUGE, REINFORCEMENT, AND SUPPORT SHALL BE PER SMACNA DUCT CONSTRUCTION STANDARDS. UNLESS NOTED OTHERWISE, SUPPLY AIR DUCTS SHALL BE CONSTRUCTED TO +2" PRESSURE STANDARD, RETURN DUCTS SHALL BE CONSTRUCTED TO -1" PRESSURE STANDARD. SEAL ALL DUCTS TO SMACNA CLASS "B" STANDARDS. INSTALL IN CONFORMANCE TO MECHANICAL CODES. FLEXIBLE DUCTS SHALL BE INSULATED NONMETALLIC, FORM "NIM-IL", MAXIMUM LENGTH OF 5'-0" AT DIFFUSER OR GRILLE CONNECTION. PROVIDE BALANCING DAMPERS WHERE SHOWN OR REQUIRED, ROUND OR RECTANGULAR, GALVANIZED SHEET METAL, WITH EXTERNAL INDICATING QUADRANT AND SETSCREW. PROVIDE TURNING VANES FOR ALL RECTANGULAR ELBOWS.
4. SHEET METAL DUCT SIZES SHOWN ARE NET CLEAR INSIDE DIMENSIONS. WHEN INTERNAL INSULATION IS REQUIRED, DUCT SIZE SHALL BE INCREASED TO PROVIDE NET CLEAR DIMENSIONS INDICATED.
5. PROVIDE LOCKING-TYPE TAMPER-RESISTANT CAPS FOR ALL REFRIGERANT CIRCUIT ACCESS PORTS LOCATED OUTDOORS.
6. DUCTWORK INSULATION:
   A. ALL SUPPLY AND RETURN AIR DUCTS IN UNCONDITIONED SPACES AND PLENUMS (ABOVE CEILINGS, WITHIN CHASES, SHAFTS, OR MECHANICAL ROOMS) AND WITHIN THE BUILDING ENVELOPE SHALL BE INSULATED WITH 2" THICK FIBERGLASS DUCT WRAP FACED WITH OUTER FOIL BLANKET, OR LINED WITH 1-1/2" THICK, COATED FIBERGLASS INSULATION, MINIMUM INSTALLED R-VALUE OF 6.
   B. ALL OUTSIDE AIR DUCTS IN UNCONDITIONED SPACES AND PLENUMS (ABOVE CEILINGS, WITHIN CHASES, SHAFTS, OR MECHANICAL ROOMS) AND WITHIN THE BUILDING ENVELOPE SHALL BE INSULATED WITH 1-1/2" THICK, 3/4 LB. DENSITY, FIBERGLASS DUCT WRAP FACED WITH OUTER FOIL BLANKET, OR LINED WITH 1/2" THICK, COATED FIBERGLASS INSULATION, MINIMUM INSTALLED R-VALUE OF 1.9.
   C. ALL SUPPLY AND RETURN AIR DUCTS IN VENTED SPACES (ATTICS, CRAWLSPACES, VENTED MECHANICAL ROOMS) OUTSIDE THE BUILDING ENVELOPE SHALL BE INSULATED WITH 3" THICK FIBERGLASS DUCT WRAP FACED WITH OUTER FOIL BLANKET, OR LINED WITH 2" THICK, COATED FIBERGLASS INSULATION, MINIMUM INSTALLED R-VALUE OF 8.0.
   D. ALL EXHAUST AIR DUCTWORK SHALL BE INSULATED BETWEEN THE FAN OUTLET AND WALL/ROOF OUTLET WITH 1-1/2" THICK, 3/4 LB. DENSITY, FIBERGLASS DUCT WRAP FACED WITH OUTER FOIL BLANKET, MIN. INSTALLED R-VALUE OF 3.5.
   E. EXPOSED SUPPLY AND RETURN AIR DUCTWORK WITHIN CONDITIONED SPACES NEED NOT BE INSULATED UNLESS NOTED OTHERWISE.
   F. EXTERIOR EXPOSED SUPPLY AND RETURN AIR DUCTWORK SHALL BE LINED WITH 2" THICK, COATED FIBERGLASS INSULATION, MINIMUM R-VALUE OF 8.0.
9. PROVIDE FLEXIBLE DUCT CONNECTORS WHERE DUCTS CONNECT TO AIR HANDLING EQUIPMENT.
10. CONTROLS: A THERMOSTAT RESPONDING TO TEMPERATURE IN THE ZONE SHALL CONTROL EACH HVAC ZONE. PROVIDE ELECTRONIC, PROGRAMMABLE THERMOSTATS WITH COOLING, 1 OR 2 STAGE HEATING, AUTOMATIC CHANGEOVER, NIGHT SETBACK, 2-HOUR MANUAL OVERRIDE, A 7-DAY, 24-HOUR CLOCK, L.E.D. INDICATOR, AND SET POINT ADJUSTMENT, AND A FAN ON/AUTO SWITCH. THERMOSTAT MUST BE CAPABLE OF RETAINING PROGRAMMING AND TIME SETTING DURING LOSS OF POWER FOR A PERIOD OF AT LEAST 10 HOURS.
    A. CONTROL CAPABILITIES: THERMOSTATS SHALL BE CAPABLE OF BEING SET FROM 55 F TO 85 F AND SHALL BE CAPABLE OF PROVIDING A 5 F DEADBAND.
    B. THERMOSTAT SHALL BE CAPABLE OF PROGRAMMED FAN OPERATION, I.E. FAN OPERATES CONTINUOUSLY DURING OCCUPIED MODE AND CYCLES WITH DEMAND DURING UNOCCUPIED MODE.
    C. OPTIMUM START CONTROLS: EACH HVAC SYSTEM SHALL HAVE CONTROLS CAPABLE OF VARYING START-UP TIME TO JUST MEET SETPOINT AT TIME OF OCCUPANCY.
    D. HEAT PUMP CONTROLS: HEAT PUMPS EQUIPPED WITH SUPPLEMENTARY HEATERS SHALL BE INSTALLED WITH CONTROLS TO PREVENT HEATER OPERATION WHEN THE HEATING LOAD CAN BE MET BY THE HEAT PUMP ALONE. A TWO-STAGE THERMOSTAT WITH THE SUPPLEMENTARY HEAT AS ITS SECOND STAGE IS ACCEPTABLE.
    E. ECONOMIZER COOLING: EACH FAN SYSTEM OVER 4-1/2 TONS OF MECHANICAL COOLING SHALL HAVE AN OUTSIDE AIR ECONOMIZER CAPABLE OF PROVIDING COOLING USING OUTSIDE AIR EVEN WHEN ADDITIONAL MECHANICAL COOLING IS REQUIRED TO MEET THE WHOLE COOLING LOAD.
    F. SHUT-OFF DAMPERS: OUTDOOR AIR SUPPLY AND EXHAUST SYSTEMS SHALL BE EQUIPPED WITH CLASS 1 MOTORIZED DAMPERS WITH A MAXIMUM LEAKAGE RATE OF 4 CFM/SF AT 1.0" W.G. DAMPERS SHALL AUTOMATICALLY SHUT WHEN SYSTEMS OR SPACES SERVED ARE NOT IN USE OR DURING BUILDING WARM-UP, COOLDOWN, OR SETBACK. GRAVITY DAMPERS ARE ALLOWED ONLY FOR AIR VOLUMES OF 300 CFM OR LESS.
    G. HIGH OCCUPANCY VENTILATION: WHERE REQUIRED BY CODE, PROVIDE A CO2 SENSOR AND CONTROLS CAPABLE OF REDUCING OUTSIDE AIR INTAKE BELOW DESIGN RATES DURING PARTIAL OCCUPANCY. AS CO2 LEVELS FALL BELOW SETPOINT, THE OUTSIDE AIR DAMPER SHALL MODULATE CLOSED. EXCEPT DURING ECONOMIZER OPERATION, OUTSIDE AIR DAMPER SHALL NOT OPEN MORE THAN DESIGN RATE REGARDLESS OF CO2 LEVEL.
    H. DUCT SMOKE DETECTORS:
       a. UPON ACTIVATION, THE SMOKE DETECTORS SHALL SHUT DOWN ALL OPERATIONAL CAPABILITIES OF THE AIR DISTRIBUTION SYSTEM IN ACCORDANCE WITH THE LISTING AND LABELING OF APPLIANCES USED IN THE SYSTEM.
       b. WHEN A FIRE ALARM SYSTEM IS PROVIDED THE DUCT SMOKE DETECTORS SHALL BE CONNECTED TO THE BUILDING'S FIRE ALARM CONTROL PANEL.
       c. IN OCCUPANCIES NOT REQUIRED TO BE EQUIPPED WITH A FIRE ALARM SYSTEM, ACTUATION OF A SMOKE DETECTOR SHALL ACTIVATE A VISIBLE AND AN AUDIBLE SIGNAL IN AN APPROVED LOCATION. SMOKE DETECTOR TROUBLE CONDITIONS SHALL ACTIVATE A VISIBLE OR AUDIBLE SIGNAL IN AN APPROVED LOCATION AND SHALL BE IDENTIFIED AS AIR DUCT DETECTOR TROUBLE.
       d. PROVIDE REMOTE TEST AND RESET CAPABILITIES FOR ALL DUCT DETECTORS.
11. ALL MECHANICAL EQUIPMENT, DUCTWORK, AND PIPING MUST BE SEISMICALLY BRACED FOR THE SITE SPECIFIC SEISMIC DESIGN CATEGORY AND SEISMIC USE GROUP, IN ACCORDANCE WITH THE LATEST ADOPTED EDITIONS OF THE OSSC, OMSC, ASHRAE, AND SMACNA. COORDINATE SITE SPECIFIC SEISMIC REQUIREMENTS WITH STRUCTURAL ENGINEER AND/OR ARCHITECT. PROVIDE SEISMIC PRODUCTS BY AMBER-BOOTH OR MASON INDUSTRIES. CONTRACTOR MANUFACTURED SEISMIC BRACING/RESTRAINT METHODS ARE NOT ACCEPTABLE. PROVIDE A SIGNED AND STAMPED LETTER FROM A PROFESSIONAL ENGINEER CERTIFYING THAT THE SUPPLIED PRODUCTS ARE CORRECT FOR THE APPLICATION AND THAT THE INSTALLATION IS IN COMPLIANCE WITH ALL APPLICABLE CODES.
12. CURB MOUNTED ROOFTOP EQUIPMENT: EQUIPMENT MUST BE POSITIVELY ATTACHED TO CURB TO RESIST SEISMIC FORCES. QUANTITY AND SIZE OF ATTACHMENTS AS REQUIRED BY APPROVED SEISMIC CALCULATION SUBMITTALS. THE EQUIPMENT AND CURB MANUFACTURERS MUST APPROVE THE ATTACHMENT. CURBS MUST BE ATTACHED TO THE STRUCTURE PER APPROVED SEISMIC CALCULATIONS AND SUBMITTAL. THE STRUCTURAL ENGINEER OF RECORD MUST DETERMINE IF THE STRUCTURAL COMPONENT WILL WITHSTAND THE REQUIRED SEISMIC FORCES AND DEAD LOADS. ANCHORING OF CURB IS SUBJECT TO CURB MANUFACTURER'S APPROVAL. DESIGN OF EQUIPMENT AND CURB TO RESIST SEISMIC FORCES IS BY EQUIPMENT AND CURB MANUFACTURERS.
13. THE MECHANICAL CONTRACTOR SHALL FURNISH ALL REQUIRED MOTORS AND STARTERS. DISCONNECTS, WHEN NOT A PART OF THE EQUIPMENT, WILL BE FURNISHED BY THE ELECTRICAL CONTRACTOR.
14. THE CONTRACTOR SHALL PERFORM THE WORK IN A MANNER THAT WILL CAUSE A MINIMUM DISRUPTION TO BUILDING TENANT USE AND SHALL COORDINATE THE WORK WITH THE BUILDING OWNER'S REPRESENTATIVE.
15. COORDINATE THE RETURN OF ALL MECHANICAL EQUIPMENT REMOVED DURING DEMOLITION WITH THE OWNER'S REPRESENTATIVE.
16. IF CONTRACTOR ENCOUNTERS MATERIAL WHICH MAY CONTAIN ASBESTOS, IMMEDIATELY STOP WORK IN THIS AREA AND NOTIFY THE OWNER.
17. THE CONTRACTOR IS RESPONSIBLE FOR HVAC EQUIPMENT CHECK-IN, SAFEKEEPING, AND DAMAGE.
18. TEST THE OPERATION OF MECHANICAL SYSTEMS AND EQUIPMENT FOR COMPLIANCE WITH CONTRACT CONDITIONS. MEASURE AIR QUANTITIES WITH CALIBRATED DEVICES CAPABLE OF MEASURING AIR QUANTITIES ON A CONTINUOUS BASIS AND DISPLAYING THAT QUANTITY ON A READILY ACCESSIBLE DISPLAY DEVICE. ADJUST ALL DAMPERS, DRIVES, MOTORS, AND OTHER ADJUSTABLE ITEMS TO DELIVER DESIGN QUANTITIES IN ACCORDANCE WITH NEBB PROCEDURAL STANDARDS (1983) OR AABC NATIONAL STANDARDS (1989). PROVIDE ALL NECESSARY BELTS, SHEAVES, ETC. PROVIDE BALANCE REPORT TO OWNER AND ENGINEER.
19. TWO OPERATING AND MAINTENANCE MANUALS SHALL BE PROVIDED IN HARD BACK LOOSE LEAF BINDERS. MANUALS SHALL CONTAIN PRODUCT CUT SHEETS AND OPERATING AND MAINTENANCE INSTRUCTIONS ON ALL EQUIPMENT, ACCESSORIES, FIXTURES, VALVES, ETC., PROVIDED FOR THE PROJECT. PROVIDE LIST OF EQUIPMENT WITH ALL NAMEPLATE DATA INCLUDING TAG #, MODEL NUMBER, SERIAL NUMBER, AND NAME OF LOCAL REPLACEMENT PARTS SUPPLIER.
20. UPON COMPLETION OF THE WORK, REMOVE ALL SURPLUS MATERIALS AND RUBBISH. MAKE ALL REQUIRED PATCHING AND REPAIRS OF OTHER TRADES' WORK DAMAGED BY THE MECHANICAL CONTRACTOR, AND LEAVE THE PREMISES IN A CLEAN, ORDERLY CONDITION.
21. THE MECHANICAL CONTRACTOR SHALL OPERATE THE SYSTEM AND DEMONSTRATE ALL ASPECTS TO THE ENGINEER AND/OR OWNER, TO PROVE ITS OPERATION. ALL FILTERS USED DURING CONSTRUCTION SHALL BE REPLACED PRIOR TO THE TEST RUN PERIOD.
22. A MINIMUM OF EIGHT (8) HOURS OF O&M INSTRUCTIONS SHALL BE PROVIDED FOR EQUIPMENT AND CONTROL SYSTEMS. A SIGNED STATEMENT FROM THE OWNER'S REPRESENTATIVE SHALL ACKNOWLEDGE SUCH TRAINING. A FOUR (4) HOUR FOLLOW-UP SESSION SHALL BE PROVIDED NOT SOONER THAN 30 DAYS NOR LATER THAN 90 DAYS FOLLOWING THE EIGHT HOUR SESSION.
23. THE MECHANICAL CONTRACTOR SHALL GUARANTEE THE HVAC SYSTEM FOR A PERIOD OF ONE YEAR FROM THE DATE OF SUBSTANTIAL COMPLETION.

HVAC ABBREVIATIONS

ACFM	ACTUAL AIR - CUBIC FEET PER MINUTE
ACH	AIR CHANGES PER HOUR
AD	ACCESS DOOR
AFF	ABOVE FINISH FLOOR
AHU	AIR HANDLING UNIT
AL	ALUMINUM
AP	ACCESS PANEL
ARCH	ARCHITECT OR ARCHITECTURAL
ATD	AIR TRANSFER DUCT
BD	BACKDRAFT DAMPER
BLDG	BUILDING
BM	BEAM
BOD	BOTTOM OF DUCT
BOP	BOTTOM OF PIPE
BOS	BOTTOM OF STEEL
BTU	BRITISH THERMAL UNIT
CDV	CLOTHES DRYER VENT
CFH	CUBIC FEET PER HOUR
CFM	CUBIC FEET PER MINUTE
CLG	CEILING
CONSTR	CONSTRUCTION
CV	CONSTRAINT VOLUME
DB	DRY BULB
DIA	DIAMETER
DN	DOWN
DWG	DRAWING
DX	DIRECT EXPANSION (REFRIGERATION)
EA	EXHAUST AIR
EAT	ENTERING AIR TEMPERATURE
EC	ELECTRICAL CONTRACTOR
ELEV	ELEVATION
ERA	ECONOMIZER RELIEF AIR
ESP	EXTERNAL STATIC PRESSURE
EWT	ENTERING WATER TEMPERATURE
EXH	EXHAUST
°F	FAHRENHEIT
FC	FLEXIBLE CONNECTION
FD	FIRE DAMPER
FLA	FULL LOAD AMPS
FLR	FLOOR
FOB	FLAT ON BOTTOM
FOT	FLAT ON TOP
FPM	FEET PER MINUTE
FSD	COMBINATION FIRE / SMOKE DAMPER
GALV	GALVANIZED STEEL
GC	GENERAL CONTRACTOR
GM	GAS METER
GPM	GALLONS PER MINUTE
GRD	GRILLES, REGISTERS, DIFFUSERS
H	HUMIDISTAT
HDPE	HIGH-DENSITY POLYETHYLENE
HEPA	HIGH EFFICIENCY PARTICULATE AIR
HP	MOTOR HORSEPOWER
HVAC	HEATING, VENTING, AND CONDITIONING
HPW	HEAT PUMP WATER
HPWR	HEAT PUMP WATER RETURN
HPWS	HEAT PUMP WATER SUPPLY
LB(S)	POUND, POUNDS
LAT	LEAVING AIR TEMPERATURE
LWT	LEAVING WATER TEMPERATURE
MA	MIXED AIR
MAX	MAXIMUM
MBH	THOUSAND BTU PER HOUR
MC	MECHANICAL CONTRACTOR
MCA	MINIMUM CIRCUIT CAPACITY
MECH	MECHANICAL
MFR	MANUFACTURER
MFS	MAXIMUM FUSE SIZE
MIN	MINIMUM
MOCP	MAXIMUM OVERCURRENT PROTECTION
NC	NORMALLY CLOSED
NG	NATURAL GAS
NIC	NOT IN CONTRACT
NO	NORMALLY OPEN
NTS	NOT TO SCALE
OBD	OPPOSED BLADE DAMPER
OC	ON CENTER
OA or OSA	OUTSIDE AIR
OMSC	2019 OREGON MECHANICAL SPECIALTY CODE
OSSC	2019 OREGON STRUCTURAL SPECIALTY CODE
PBD	PARALLEL BLADE DAMPER
PD	PRESSURE DRIP
PSI	POUNDS PER SQUARE INCH
PT	PRESSURE / TEMPERATURE PLUG
PVC	POLYVINYL CHLORIDE
RA	RETURN AIR
RECT	RECTANGULAR
RPM	REVOLUTIONS PER MINUTE
REQ'D	REQUIRED
SA	SUPPLY AIR
SCFM	STANDARD AIR - CUBIC FEET PER MINUTE
SEC	SECTION
SF or SQ FT	SQUARE FEET
SIM	SIMILAR
SM	SHEET METAL
SMACNA	SHEET METAL AND AIR CONDITIONING CONTRACTORS NATIONAL ASSOCIATION
SP	STATIC PRESSURE
SPEC	SPECIFICATION OR SPECIFIED
SS	STAINLESS STEEL
STD	STANDARD
T	THERMOSTAT
TA	TRANSFER AIR
TC	TEMPERATURE CONTROLS
TEMP	TEMPERATURE
TOS	TOP OF STEEL
TYP	TYPICAL
UNO	UNLESS NOTED OTHERWISE
VAV	VARIABLE AIR VOLUME
VD	VOLUME DAMPER
VFD	VARIABLE FREQUENCY DRIVE
WB	WET BULB
W/	WITH
WG	WATER GAUGE

NOT FOR CONSTRUCTION
REFERENCE GENERAL NOTE 1 ON M0.01

DRAWING LIST

WILLOW WIND RENOVATIONS

1497 E. MAIN ST.
ASHLAND, OR 97520

arkitek:
design and architecture, llc.
426 a street
ashland, or 97520
tel.: 541.591.9988

ArcSine engineering
A full-spectrum engineering company
950 Executive Way | Redding, CA 96002 | (530)222-7204
1236 Disk Drive | Medford, OR 97501 | (541)842-4188
www.arc-sine.com

REGISTERED PROFESSIONAL ENGINEER 75561 OREGON JAN. 11, 2005 JOHN M. KELLER
EXPIRES: 06/30/21

Revision	Date

Date	02/01/2021
Job	2025
Drawn By	JMK
Checked By	
Scale	NONE

100%DD

Drawing Title
MECHANICAL LEGEND AND NOTES

Drawing No.
M0.01

PACKAGED ROOFTOP HEAT PUMP SCHEDULE

TAG	SERVICE	TOTAL AIR FLOW (CFM)	MINIMUM OUTSIDE AIR CFM	OUTSIDE AIR TEMP	FAN ESP (IN WC)	REFRIG-ERANT	COOLING				SEER	EER	IEER	HEATING CAPACITY	HSPF	COP @ 47 F	FAN MOTOR SIZE (HP)	ELECTRICAL					WEIGHT	MANUFACTURER	MODEL
							TOTAL CAPACITY (BTUH)	SENSIBLE CAPACITY (BTUH)	EDB TEMP	EWB TEMP								ELEC HEAT (kW)	VOLTS	PHASE	MCA	MOCP			
RT-1	HEALTH/FAMILY RM	2,050	255	105	0.5	R-410A	51,200	46,300	77.1	60.2	14.0	--	--	73,250	8.0	--	1	15	208/230	3	63	70	960	LENNOX	KHB060S4B
RT-2	ROOMS 2 & 3	3,350	565	105	0.5	R-410A	85,700	76,300	77.9	60.5	--	12.1	12.9	137,850	--	3.6	2	30	208/230	3	121	125	1,370	LENNOX	KHB092H4B

NOTES:
1. PROVIDE WITH FACTORY WIRED GFCI OUTLET AND NON-FUSED DISCONNECT.
2. PROVIDE WITH FULLY MODULATING ECONOMIZER WITH BAROMETRIC RELIEF.
3. PROVIDE WITH 7-DAY PROGRAMMABLE THERMOSTAT.
4. PROVIDE WITH FACTORY INSTALLED RETURN AIR SMOKE DETECTOR.
5. PROVIDE 14" ROOF CURB. VERIFY ROOF PITCH.

SPLIT SYSTEM SCHEDULE: HEAT PUMP WITH FAN COIL

FAN COIL TAG	HP UNIT TAG	SERVICE	FAN COIL UNIT POSITION	AIR FLOW (CFM)	MIN. OUTSIDE AIR (CFM)	FAN COIL UNIT				AIR CONDITIONING										MANUFACTURER	FAN COIL MODEL	HEAT PUMP MODEL
						HP HEATING CAPACITY	ELECTRICAL			REFRIG	NOMINAL CAPACITY (TONS CLG)	COOLING CAPACITY		SEER	HSPF	HP ELECTRICAL						
							VOLTS / PHASE	COIL AMPS	MOCP			TOTAL (BTUH)	SENS. (BTUH)			VOLTS	PHASE	MCA	MOCP			
FC-1	HP-1	ROOM 4	HORIZONTAL	1,485	350	54,000	208/1	5.6	15	R-410A	4.0	46,400	35,900	16.5	11	208	1	36	44	MITSUBISHI	PVFY-P54NAMU-E1	PUMY-HP48NKMU-1
FC-2	HP-2	ROOM 1	HORIZONTAL	1,125	260	38,000	FROM OUTDOOR UNIT			R-410A	3.0	33,900	27,600	17.8	11	208	1	28	40	MITSUBISHI	PVA-A36AA7	PUZ-HA36NHA5
FC-3	HP-3	ART RM	HORIZONTAL	875	340	32,000	FROM OUTDOOR UNIT			R-410A	2.5	27,600	20,500	17	9.7	208	1	28	40	MITSUBISHI	PVA-A30AA7	PUZ-HA30NHA5

NOTES

ENERGY RECOVERY UNIT SCHEDULE

TAG	SERVICE	OUTSIDE AIR CFM	EXHAUST AIR CFM	SUMMER DESIGN		WINTER DESIGN DB, °F	EXHAUST AIR			SUPPLY AIR			ELECTRICAL				MANUFACTURER	MODEL	NOTES
				DB, °F	WB, °F		SUMMER		WINTER	SUMMER		WINTER	VOLTS	PHASE	MCA	MOCP			
							DB, °F	%RH	DB, °F	DB, °F	WB, °F	DB, °F							
ERV-1	HOUSE	150	150	99	68	19	75	50	72	81	64	57	208	1	2.1	15	MITSUBISHI	LGH-F300RVX-E	1
ERV-2	ROOM 4	350	350	99	68	19	75	50	72	81	64	56	208	1	3.1	15	MITSUBISHI	LGH-F470RVX-E	1
ERV-3	ROOM 1 AND ART	600	600	99	68	19	75	50	72	83	65	54	208	1	3.5	15	MITSUBISHI	LGH-F600RVX-E	1

NOTES:
1. INTERLOCK WITH FAN COIL UNITS. ERV OPERATES DURING OCCUPIED PERIOD.

DUCT-LESS SPLIT SYSTEM SCHEDULE

TAG	TYPE	BTU	SUPPLY CFM	OA CFM	ELECTRICAL				SEER	HSPF	MANUFACTURER	MODEL	NOTES
					VOLTS	PHASE	MCA	MOCP					
FC-41	DUCTED FAN COIL	18,000	635	60	208/230	1	1.1	50	14.7	10.0	MITSUBISHI	SEZ-KD18NAR1.TH	1,2
FC-42	DUCTED FAN COIL	9,000	190	30	208/230	1	1.0				MITSUBISHI	SEZ-KD09NAR1.TH	
FC-43	MULTI POSITION	24,000	735	60	208/230	1	2.4				MITSUBISHI	SVZ-KP24NA	
HP-4	HEAT PUMP	48,000	--	--	208/230	1	42.0				MITSUBISHI	MXZ-8C48NAHZ	

NOTES:
1. PROVIDE THREE PORT BRANCH BOX
2. PROVIDE 24V, WALL MOUNT THERMOSTATS.

OUTSIDE AIR SCHEDULE

SYSTEM TAG	ZONE	SPACE TYPE	AREA SQ.FT. (Az)	ZONE POP. (Pz)	CFM/ PERSON (Rp)	CFM/ SQFT (Ra)	Pz*Rp	Az*Ra	EFFECTIVE-NESS (Ez)	ZONE OA (Voz)	AIRFLOW TO ZONE		PRIMARY OA FRACTION (Zp)
											PRIMARY (Vpz)	MIN (Vpzm)	
RT-1	Zone 1	CLASSROOMS (AGES 5-8)	625	15.6	10	0.12	156.3	75.0	0.8	289	1,230	1,230	0.24
	Zone 2	BREAK ROOMS-GENERAL	234	5.9	5	0.06	29.3	14.0	0.8	54	240	240	0.23
	Zone 3	OFFICE SPACE	196	1.0	5	0.06	4.9	11.8	0.8	21	230	230	0.09
	Zone 4	CORRIDORS	112	0	0	0.06	0	6.7	0.8	8	100	100	0.08
	Zone 5	TOILET - PUBLIC	53	0	0	0	0	0	0.8	0	70	70	NA
		TOTALS:	1,220	22.455							1,870	1,870	
		SYSTEM POPULATION (Ps)	15										
		DIVERSITY (D)	0.7										
		UNCORRECTED OSA (Vou)	235										
		MAX Zp	0.24										
		VENT EFF. (Ev)	0.91										
		MIN. OUTSIDE AIR (Vot), CFM	255										
RT-2	Zone 1	CLASSROOMS (AGES 5-8)	453	11.3	10	0.12	113.3	54.4	0.8	210	750	750	0.28
	Zone 2	STORAGE ROOMS	114	0.2	5	0.06	1.1	6.8	0.8	10	150	150	0.07
	Zone 3	CLASSROOMS (AGES 5-8)	484	12.1	10	0.12	121.0	58.1	0.8	224	790	790	0.28
	Zone 4	CLASSROOMS (AGES 5-8)	372	9.3	10	0.12	93.0	44.6	0.8	172	740	740	0.23
	Zone 5	CORRIDORS	144	0	0	0.06	0	8.6	0.8	11	110	110	0.10
	Zone 6	JANITOR CLOSET, TRASH ROOM, RECYC	53	0	0	0	0	0	0.8	0	30	30	NA
	Zone 7	TOILET - PUBLIC	159	0	0	0	0	0	0.8	0	120	120	NA
		TOTALS:	1,779	32.953							2,690	2,690	
		SYSTEM POPULATION (Ps)	32										
		DIVERSITY (D)	1.0										
		UNCORRECTED OSA (Vou)	491										
		MAX Zp	0.28										
		VENT EFF. (Ev)	0.87										
		MIN. OUTSIDE AIR (Vot), CFM	565										

NOTES:
1. PER 2019 OMSC CHAPTER 4
2. FOR CONSTANT VOLUME SYSTEMS, Vpz = Vpzm
3. THIS IS THE CODE MINIMUM OSA VOLUME. SEE EQUIPMENT SCHEDULE FOR DESIGN OSA VOLUME, WHICH MAY EXCEED THIS DUE TO MAKE-UP AIR REQUIREMENTS.

SINGLE ZONE OUTSIDE AIR SCHEDULE

SYSTEM TAG	SPACE TYPE	AREA SQ.FT. (Az)	ZONE POP. (Pz)	CFM/ PERSON (Rp)	CFM/ SQFT (Ra)	Pz*Rp	Az*Ra	EFFECTIVE-NESS (Ez)	SYSTEM OUTDOOR AIR (Vot)
HP-1	CLASSROOMS (AGES 5-8)	759	19.0	10	0.12	189.8	91.1	0.8	350
HP-2	CLASSROOMS (AGES 5-8)	552	13.8	10	0.12	138.0	66.2	0.8	260
HP-3	ART CLASSROOM	564	11.3	10	0.18	112.8	101.5	0.8	270
FC-41	OFFICE SPACE	328	1.6	5	0.06	8.2	19.7	0.8	30
FC-42	OFFICE SPACE	182	0.9	5	0.06	4.6	10.9	0.8	20
FC-43	OFFICE SPACE	424	2.1	5	0.06	10.6	25.4	0.8	50

NOTE:
Vot = Voz = SYSTEM MINIMUM OUTDOOR AIRFLOW RATE FOR SINGLE ZONE SYSTEMS PER ASHRAE 62.1 SECTION 6.2.3.

FAN SCHEDULE

TAG	SERVICE	TYPE	CFM	ELECTRICAL			MANUFACTURER	MODEL	WEIGHT	NOTES
				VOLTS	PHASE	HP / WATTS				
EF-1	FAMILY RR	CEILING MNT	75	120	1	TBD	TBD	TBD	TBD	1
EF-2	NEW RR	ROOF MNT	200	120	1	TBD	TBD	TBD	TBD	2,3

NOTES:
1. CONTROL WITH WALL SWITCH.
2. CONTROL WITH TIME CLOCK OR INTERLOCK WITH RT-2. FAN RUNS DURING OCCUPIED PERIOOD.
3. PROVIDE ROOF CURB WITH GRAVITY BACKDRAFT DAMPER.

NOT FOR CONSTRUCTION
REFERENCE GENERAL NOTE 1 ON M0.01

WILLOW WIND RENOVATIONS

1497 E. MAIN ST.
ASHLAND, OR 97520

arkitek:
design and
architecture, llc.

426 a street
ashland, or 97520
tel.: 541.591.9988

ArcSine engineering
A full-spectrum engineering company
950 Executive Way | Redding, CA 96002 | (530)222-7204
1236 Disk Drive | Medford, OR 97501 | (541)842-4188
www.arc-sine.com

REGISTERED PROFESSIONAL ENGINEER
75561
OREGON
JAN. 11, 2005
JOHN M. KELLER
EXPIRES: 06/30/21

Revision	Date

Date	02/01/2021
Job	2025
Drawn By	JMK
Checked By	
Scale	NONE

100%DD

Drawing Title
MECHANICAL SCHEDULES

Drawing No.
M0.02

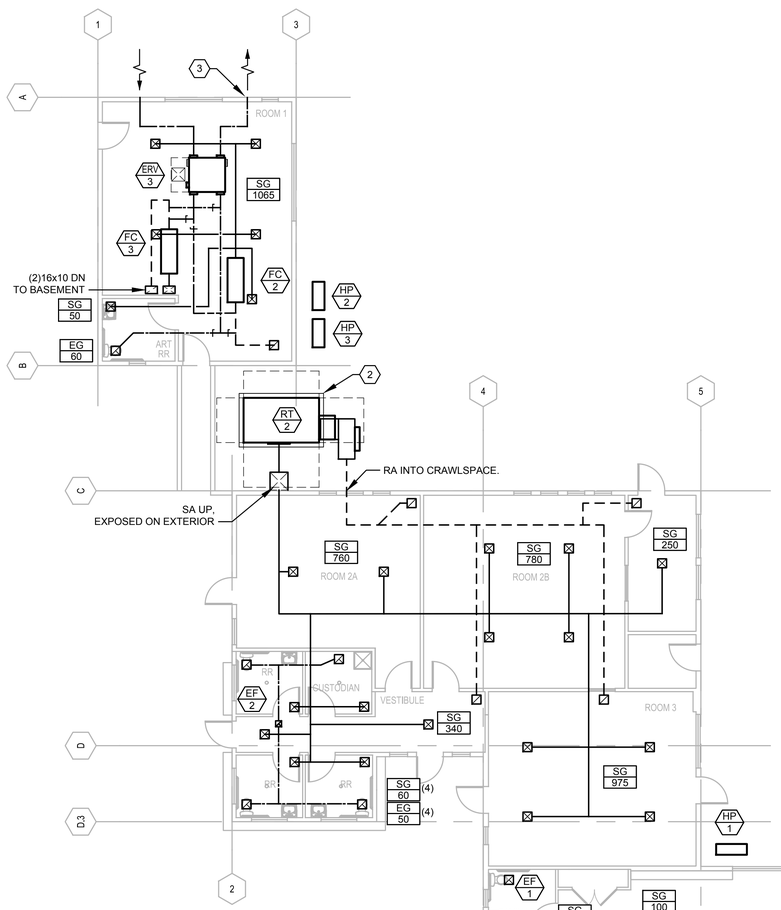

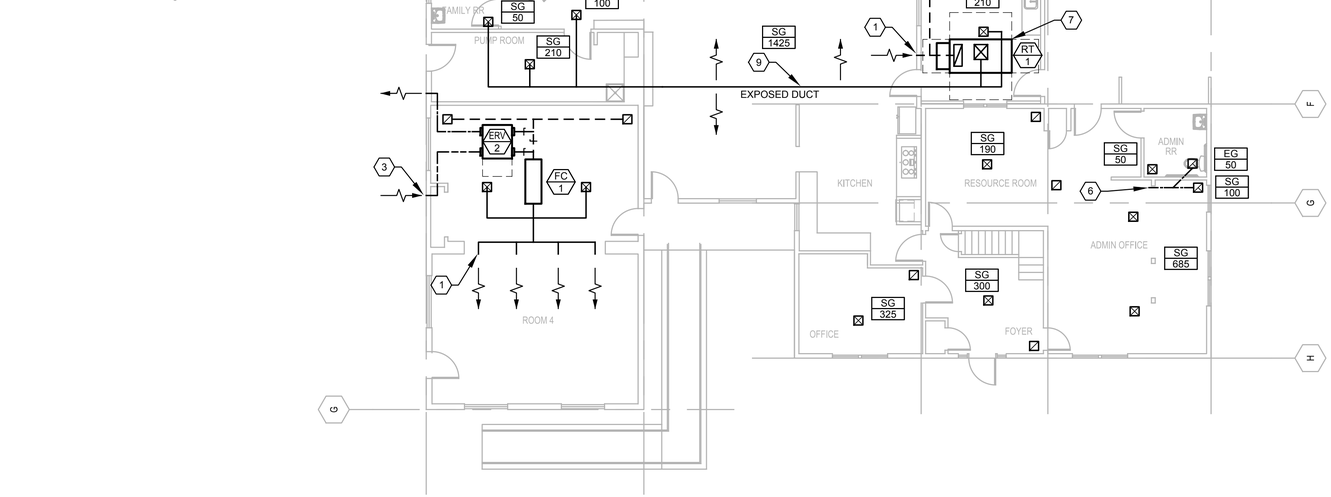

NORTH

MAIN FLOOR PLAN
1/8" = 1'-0"

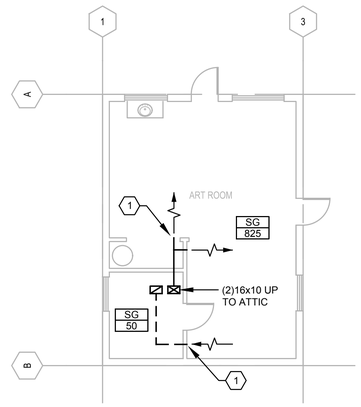

NORTH

BASEMENT PLAN
1/8" = 1'-0"

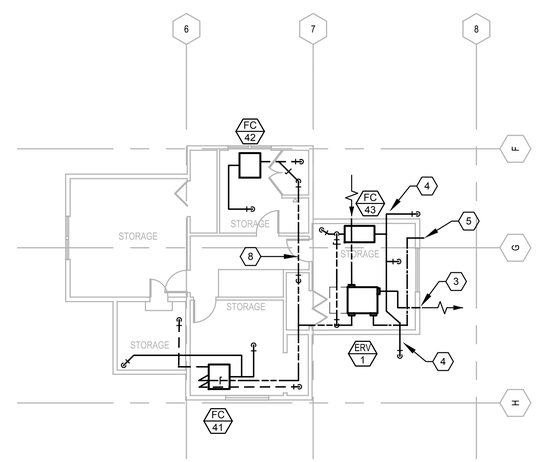

NORTH

SECOND FLOOR PLAN
1/8" = 1'-0"

SHEET NOTES

A. THESE PLANS ARE SCHEMATIC ONLY. THE DESIGN-BUILD CONTRACTOR IS RESPONSIBLE FOR THE FINAL DESIGN OF THE HVAC SYSTEMS.

B. COORDINATE CONDENSATE DRAIN PIPING WITH PLUMBING CONTRACTOR.

C. COORDINATE EXACT LOCATION OF AIR INLETS AND OUTLETS WITH EXISTING LIGHTS AND STRUCTURE.

D. HVAC SYSTEMS AND DUCTWORK ON THE SECOND FLOOR ARE EXPOSED IN THE STORAGE ROOMS. INSTALL IN A NEAT AND ORDERLY MANNER THAT ALLOWS SERVICE ACCESS AND MAXIMIZES USABLE STORAGE SPACE.

KEYED NOTES

1. SIDEWALL SUPPLY OR RETURN, TYP.
2. 4" THICK CONCRETE PAD.
3. LOUVER, TYP.
4. DUCT INTO ATTIC TO DIFFUSER IN CEILING BELOW.
5. DUCT INTO ATTIC TO EXHAUST GRILLES IN CEILING BELOW.
6. DUCT CONTINUES TO ERV IN 2ND FLOOR STORAGE ROOM.
7. RT-1 ON NEW ROOF OVER THE HEALTH ROOM. COORDINATE WITH STRUCTURE.
8. INSTALL DUCT IN 2ND FLOOR ATTIC TO CROSS HALL.
9. PROVIDE SUPPLY GRILLES ON THE SIDES OF THE EXPOSED DUCT IN THE FAMILY ROOM.

NOT FOR CONSTRUCTION
REFERENCE GENERAL NOTE 1 ON M0.01

WILLOW WIND RENOVATIONS

1497 E. MAIN ST.
ASHLAND, OR 97520

arkitek:
design and
architecture, llc.

426 a street
ashland, or 97520
tel.: 541.591.9988

ArcSine engineering
A full-spectrum engineering company
950 Executive Way | Redding, CA 96002 | (530)222-7204
7236 Disk Drive | Medford, OR 97501 | (541)842-4188
www.arc-sine.com

REGISTERED PROFESSIONAL ENGINEER 75561 OREGON JUL 11, 2008 JOHN M. KELLER
EXPIRES: 06/30/21

Revision	Date

Date	02/01/2021
Job	2025
Drawn By	JMK
Checked By	
Scale	1/8"=1'-0"

100%DD

Drawing Title
MECHANICAL FLOOR PLANS

Drawing No.
M1.01

PIPING SYMBOLS

- BUILDING SANITARY BELOW FLOOR OR GRADE
- VENT
- COLD WATER
- HOT WATER
- PIPE DOWN
- PIPE UP
- TEE DOWN
- TEE UP
- ELBOW
- TEE
- CAP
- CONCENTRIC REDUCER / INCREASER
- UNION
- DIRECTION OF FLOW
- PUMP
- FLOOR CLEANOUT
- SHUT-OFF VALVE

GENERAL SYMBOLS

- (E) — EXISTING TO REMAIN
- XX / XX — EQUIPMENT TAG / EQUIPMENT NUMBER
- 1 — KEYED NOTES
- HW, CW, SAN DRAIN, AND VENT TO PLUMBING FIXTURE
- CW, SAN DRAIN, AND VENT TO WATER CLOSET

NOTE: ABBREVIATIONS AND SYMBOLS ARE ARCSINE ENGINEERING STANDARDIZED SYMBOL LEGENDS. AS SUCH, ALL SYMBOLS SHOWN MAY NOT APPEAR ON OR WITHIN THIS SET OF CONTRACT DOCUMENTS.

GENERAL NOTES

1. DESIGN/BUILD:
   A. THESE DRAWINGS AND SPECIFICATIONS ARE FOR THE DIVISION 22 CONTRACTOR TO ENGINEER, DESIGN, BID AND INSTALL PLUMBING SYSTEMS PER THE DESIGN INTENT SHOWN.
   B. ALL EQUIPMENT, PIPE WORK, COMPONENT AND ACCESSORY SIZES, CAPACITIES, AND TYPES SHOWN IN THESE DRAWINGS AND SPECIFICATIONS SHALL BE ADHERED TO.
   C. THE CONTRACTOR SHALL DESIGN AND INSTALL A COMPLETE AND FULLY OPERATIONAL SYSTEM.
   D. DESIGN AND AS-BUILT DRAWINGS SHOWING ALL EQUIPMENT, COMPONENTS, AND PIPING SHALL BE PREPARED TO THE SAME SCALE AS THESE DRAWINGS. AS-BUILT DRAWINGS SHALL BE DRAWN IN AUTOCAD. ELECTRONIC COPIES SHALL BE PROVIDED TO THE OWNER AND ARCHITECT.
2. THE ENTIRE INSTALLATION SHALL CONFORM TO THE REQUIREMENTS OF THE MOST RECENTLY ADOPTED PLUMBING CODE, MECHANICAL CODE, ELECTRICAL CODE, BUILDING CODE AND ALL OTHER APPLICABLE CITY, COUNTY, AND STATE CODES AND REGULATIONS IN EFFECT AT THE DATE OF THE BID. CONFORM TO ANY CODES, RULES, REGULATIONS AND REQUIREMENTS THAT THE PROJECT OWNER HAS.
3. OBTAIN ALL INSPECTION APPROVALS ON PLUMBING WORK FROM REGULATING AGENCIES WHERE REQUIRED.
4. PRIOR TO FABRICATION AND INSTALLATION THE CONTRACTOR SHALL COORDINATE THE INSTALLATION OF ALL PLUMBING PIPING AND EQUIPMENT WITH MECHANICAL PIPING, EQUIPMENT, DUCTWORK, AND ALL OTHER TRADES INCLUDING BUT NOT LIMITED TO THE MECHANICAL CONTRACTOR, ELECTRICAL CONTRACTOR, FIRE PROTECTION CONTRACTOR, GENERAL CONTRACTOR, AND ANY CONTRACTOR HIRED DIRECTLY BY THE OWNER. WHERE CONFLICTS MAY OCCUR, THEY SHALL BE RESOLVED PRIOR TO INSTALLATION.
5. THE DRAWINGS SCHEMATICALLY SHOW THE GENERAL DESIGNS ARRANGEMENT AND THE EXTENT OF THE SYSTEM. CONTRACTOR TO FIELD VERIFY AND MAKE ALTERATIONS AS NECESSARY TO MAKE THE SYSTEM COMPLETE AND OPERATIONAL IN ACCORDANCE WITH THE DESIGN INTENT.
6. COORDINATE RETURN OF ALL PLUMBING ITEMS REMOVED DURING DEMOLITION, WITH THE OWNER'S REPRESENTATIVE.
7. SEE ARCHITECTURAL DRAWINGS FOR EXACT LOCATIONS OF ALL PLUMBING FIXTURES.
8. IF CONTRACTOR ENCOUNTERS MATERIAL WHICH MAY CONTAIN ASBESTOS, IMMEDIATELY STOP WORK IN THIS AREA AND NOTIFY THE OWNER.
9. EXISTING INTERIOR PIPING AND EQUIPMENT HAS BEEN LOCATED IN AN APPROXIMATE WAY ONLY. THE CONTRACTOR SHALL VERIFY LOCATIONS, POINTS OF CONNECTION, PIPE SIZES AND PIPE ROUTING THROUGH EXISTING CONDITIONS PRIOR TO COMMENCING WORK.
10. THE CONTRACTOR SHALL PERFORM THE WORK IN A MANNER THAT WILL CAUSE A MINIMUM DISRUPTION TO BUILDING TENANT USE AND SHALL COORDINATE THE WORK WITH THE BUILDING OWNER'S REPRESENTATIVE.
11. ALL OPENINGS FOR PIPING THROUGH FIRE-RATED ENCLOSURES SHALL BE CAULKED AS REQUIRED BY CODE TO MAINTAIN FIRE RATING.
12. ANY SHUT DOWNS REQUIRED TO CONNECT TO ALL ACTIVE PIPING ARE TO BE COORDINATED WITH OWNER.
13. ALL VALVES CONCEALED IN CEILING OR WALLS SHALL BE PROVIDED WITH ACCESS PANELS.
14. THE PLUMBING CONTRACTOR SHALL PROVIDE FULL SIZE CONDENSATE DRAIN FROM AIR CONDITIONING EQUIPMENT (WITH DEEP SEAL TRAP AND UNION) AND DISCHARGE TO THE NEAREST APPROVED RECEPTOR.
15. LOCATE ALL PLUMBING VENTS AT LEAST 3 FEET ABOVE OR 10 FEET AWAY FROM ALL OUTSIDE AIR INTAKES INTO THE BUILDING.
16. SEE "PLUMBING FIXTURE SCHEDULE" FOR FIXTURE PERFORMANCE CRITERIA.
17. ALL PLUMBING EQUIPMENT SHALL BE LISTED AND LABELED BY AN APPROVED TESTING AGENCY.
18. EQUIPMENT AND INSTALLATION SHALL MEET NATIONAL SANITATION FOUNDATION (NSF) STANDARDS, OR EQUIVALENT.
19. PROVIDE PROPER PROVISIONS FOR EXPANSION OR MOVEMENT OF ALL PIPING.
20. ALL PIPING SHALL BE SECURED BY DOUBLE NUTTING AT THE HANGER ROD ATTACHMENT TO THE STRUCTURE AND AT THE PIPE HANGER.
21. PROVIDE WATER HAMMER ARRESTERS (SHOCK ABSORBERS) AT ALL PIPE LOCATIONS WHERE VALVE CLOSURES (SUCH AS FLUSH VALVES) MAY CAUSE WATER HAMMER OR RESULT IN EXCESSIVE PIPE VIBRATION OR MOVEMENT.
22. UPON COMPLETION OF THE WORK, REMOVE ALL SURPLUS MATERIALS AND RUBBISH. MAKE ALL REQUIRED PATCHING AND REPAIRS OF OTHER TRADES' WORK DAMAGED BY THIS CONTRACTOR, AND LEAVE THE PREMISES IN A CLEAN, ORDERLY CONDITION.
23. THE CONTRACTOR SHALL FIELD VERIFY THE EXISTING CONDITIONS AND COORDINATE WITH THE ARCHITECT AND GENERAL CONTRACTOR AS REQUIRED TO ENSURE THAT THERE IS ADEQUATE SPACE FOR INSTALLATION AND SERVICE.
24. PIPE INSULATION:
    i) HOT WATER: PROVIDE A MINIMUM OF 1" THICK INSULATION (CONDUCTIVITY NOT EXCEEDING 0.27 BTU/IN/HR-FT²-°F) ON ALL SERVICE HOT WATER AND HOT WATER RECIRCULATION PIPING.
    ii) COLD WATER: PROVIDE 1/2" THICK INSULATION ON PIPE INSTALLED ABOVE GRADE WITHIN THE BUILDING FOR CONDENSATION CONTROL.
25. PIPE MATERIALS:
    -DOMESTIC WATER, ABOVE GRADE: TYPE L COPPER
    -SAN DRAIN BELOW GRADE: CAST IRON, PVC, OR ABS TO MATCH EXISTING AND PLUMBING CODE REQUIREMENTS
    -SAN DRAIN ABOVE GRADE: PVC OR ABS MEETING PLUMBING CODE REQUIREMENTS
    -SAN VENT: ABS MEETING PLUMBING CODE REQUIREMENTS
26. DEMOLITION: REFERENCE DEMOLITION NOTES ON P2.00.
27. LOCATE SAN CLEANOUTS PER THE REQUIREMENTS OF THE PLUMBING CODE. CLEANOUT SIZE SHALL MATCH THE SIZE OF THE DOWNSTREAM SAN PIPE CONNECTED TO THE CLEANOUT.

PLUMBING FIXTURE SCHEDULE

FIXTURE TAG	DESCRIPTION: FIXTURE	DESCRIPTION: TYPE	PLUMBING CONNECTIONS (IN): CW	HW	DRAIN	VENT	NOTES
FD-1	FLOOR DRAIN	8" ROUND STRAINER, CAST IRON, TRAP PRIMER CONNECTION, INTEGRAL TRAP AND CLEANOUT	-	-	2"	1-1/2"	
L-1	LAVATORY	WALL HUNG WITH OVERFLOW, WHITE, VITREOUS CHINA, ADA-COMPLIANT. PROVIDE WITH WALL SUPPORT BRACKETS. FAUCET: SINGLE-HANDLE, CW AND HW, 0.5-GPM, ADA-COMPLIANT.	1/2"	1/2"	1-1/4"	1-1/4"	1
MS-1	MOP SINK	FLOOR-MOUNTED, 24" SQUARE, RIM GUARD, MOP HANGER, 36" LONG HOSE, STAINLESS STEEL BRACKET WITH THREE HANGER GRIPS. FAUCET: WALL-MOUNTED, 3/4" THREADED HOSE OUTLET, VACUUM BREAKER, BUCKET HANGER, SUPPORT BRACKET.	1/2"	1/2"	2"	1-1/2"	
S-1	SINK	SINGLE-BOWL, SELF RIMMING, SELF-RIMMING, STAINLESS STEEL, ADA-COMPLIANT. FAUCET: SINGLE-HANDLE, CW AND HW, 1.5-GPM, ADA-COMPLIANT.	1/2"	1/2"	1-1/2"	1-1/2"	
WC-1	WATER CLOSET	FLOOR-MOUNTED, TANK-TYPE, 1.28 GPF, WHITE, ELONGATED BOWL WITH SEAT, ADA-COMPLIANT	1/2"	-	3"	2"	

NOTES: 1. FURNISH AND INSTALL SINGLE-FIXTURE MIXING VALVE AT LAVATORY SET TO 110°F MAXIMUM DELIVERY TEMPERATURE.

PLUMBING ABBREVIATIONS

AD	ACCESS DOOR	DN	DOWN	HW	HOT WATER (POTABLE)	OC	ON CENTER	SH	SHOWER
AFF	ABOVE FINISH FLOOR	DW	DISHWASHER	HWR	HOT WATER RETURN	OA/OSA	OUTSIDE AIR	SIM	SIMILAR
ARCH	ARCHITECT OR ARCHITECTURAL	DWG	DRAWING			OMSC	OREGON MECHANICAL SPECIALTY CODE	SPEC	SPECIFICATION OR SPECIFIED
BFF	BELOW FINISHED FLOOR	ELEV	ELEVATION	I.E.	INVERT ELEVATION	OPSC	OREGON PLUMBING SPECIALTY CODE	SRV	SAFETY RELIEF VALVE
BLDG	BUILDING	ET	EXPANSION TANK	INT	INITIAL WORK TO BE DONE	OSSC	OREGON STRUCTURAL SPECIALTY CODE	SS	STAINLESS STEEL
BM	BEAM	EWT	ENTERING WATER TEMPERATURE	L	LAVATORY			STD	STANDARD
BOD	BOTTOM OF DUCT	EWF	EYE WASH FOUNTAIN	LB(S)	POUND, POUNDS			TPRV	THERMAL PRESSURE RELIEF VALVE
BOP	BOTTOM OF PIPE	EWH	ELECTRIC WATER HEATER			PRV	PRESSURE RELIEF VALVE	TOS	TOP OF STEEL
BOS	BOTTOM OF STEEL			MAX	MAXIMUM	PT	PRESSURE TANK	TYP	TYPICAL
BTU	BRITISH THERMAL UNIT	FC	FLEXIBLE CONNECTION	MBH	THOUSAND BTU PER HOUR	PSI	POUNDS PER SQUARE INCH		
		FCO	FLOOR CLEANOUT	MC	MECHANICAL CONTRACTOR	PT	PRESSURE / TEMPERATURE PLUG	U	URINAL
CA	COMPRESSED AIR	FLA	FULL LOAD AMPS	MCA	MINIMUM CIRCUIT CAPACITY	PVC	POLYVINYL CHLORIDE	UNO	UNLESS NOTED OTHERWISE
CLG	CEILING	FLR	FLOOR	MECH	MECHANICAL				
CO	CLEANOUT	FU	FIXTURE UNITS	MFGR	MANUFACTURER	RD	RAIN DRAIN	V	VENT
CTG	CLEANOUT TO GRADE	FUT	FUTURE WORK TO BE DONE	MIN	MINIMUM	RDO	RAIN DRAIN OVERFLOW	VTR	VENT TO ROOF
OR COTG				MOCP	MAXIMUM OVERCURRENT PROTECTION	RECT	RECTANGULAR		
CONSTR	CONSTRUCTION	GC	GENERAL CONTRACTOR			REQ'D	REQUIRED	W/	WITH
CW	COLD WATER (POTABLE)	GPM	GALLONS PER MINUTE	NC	NORMALLY CLOSED	RPM	REVOLUTIONS PER MINUTE	WC	WATER CLOSET
				NG	NATURAL GAS			WCO	WALL CLEANOUT
DCW	DOMESTIC CLOTHES WASHER	HB	HOSE BIBB	NIC	NOT IN CONTRACT	SAN	SANITARY DRAIN LINE	WH	WATER HEATER
DF	DRINKING FOUNTAIN	HP	MOTOR HORSEPOWER	NO	NORMALLY OPEN	SCFM	STANDARD CUBIC FEET PER MINUTE	WHA	WATER HAMMER ARRESTOR
DIA	DIAMETER	HR	HOUR	NTS	NOT TO SCALE	SF/SQFT	SQUARE FEET		

DRAWING LIST

NOT FOR CONSTRUCTION
REFERENCE GENERAL NOTE 1 ON P1.00

WILLOW WIND RENOVATIONS

1497 E. MAIN ST.
ASHLAND, OR 97520

arkitek: design and architecture, llc.
426 a street
ashland, or 97520
tel.: 541.591.9988

ArcSine engineering
A full-spectrum engineering company
950 Executive Way | Redding, CA 96002 | (530)222-7204
1236 Disk Drive | Medford, OR 97501 | (541)842-4188
www.arc-sine.com

REGISTERED PROFESSIONAL ENGINEER 76561 OREGON JAN. 21, 2020 JOHN M. KELLER

EXPIRES: 06/30/21

Revision	Date

Date	02/01/2021
Job	2025
Drawn By	CCH
Checked By	
Scale	NTS

100%DD

Drawing Title
LEGEND AND GENERAL NOTES

Drawing No.
P1.00

DEMOLITION NOTES:

COORDINATE WITH ARCHITECTURAL PLAN AD1.01 FOR LIMITS OF DEMOLITION FOR THE DETAIL PLANS, AND EXISTING LAYOUTS NOTED ON THIS DRAWING. THE FOLLOWING NOTES REFERENCE DETAIL PLAN NUMBERS SHOWN ON THIS DRAWING.

- DETAIL PLAN 1 AREA: DEMOLISH EXISTING PLUMBING FIXTURES IN THIS AREA, INCLUDING: TWO FULL-SIZE WATER CLOSETS, ONE CHILD-SIZE WATER CLOSET, AND TWO COUNTER-MOUNTED LAVATORIES. DEMOLISH CW, HW, SAN, AND VENT BACK TO A POINT SUITABLE FOR RECONNECTION TO THE IMPROVEMENTS PLUMBING LAYOUT FOR THE SPACE. DEMOLISH CW, HW, SAN, AND VENT PIPING THAT WILL NO LONGER BE USED AS PART OF THE IMPROVEMENTS WORK.
- DETAIL PLAN 2 AREA: DEMOLISH EXISTING PLUMBING FIXTURES IN THIS AREA, INCLUDING: ONE WATER CLOSET, ONE COUNTER-MOUNTED LAVATORY, AND ONE TWO-BASIN SINK. DEMOLISH CW, HW, SAN AND VENT BACK TO A POINT SUITABLE FOR RECONNECTION TO THE IMPROVEMENTS PLUMBING LAYOUT FOR THE SPACE. DEMOLISH CW, HW, SAN, AND VENT PIPING THAT WILL NO LONGER BE USED AS PART OF THE IMPROVEMENTS WORK.
- DETAIL PLAN 3 AREA: DEMOLISH EXISTING PLUMBING FIXTURES IN THIS AREA, INCLUDING: ONE WATER CLOSET AND ONE COUNTER-MOUNTED LAVATORY. PERFORM DEMOLITION OF CW, HW, SAN, AND VENT PIPING IN THIS AREA, IF REQUIRED, TO FACILITATE REPLACEMENT OF THE EXISTING PLUMBING FIXTURES WITH NEW PLUMBING FIXTURES.
- DETAIL PLAN 4 AREA: DEMOLISH EXISTING PLUMBING FIXTURES IN THIS AREA, INCLUDING: TWO WATER CLOSETS AND ONE WALL-HUNG LAVATORY. PERFORM DEMOLITION OF CW, HW, SAN, AND VENT PIPING IN THIS AREA, AS REQUIRED, TO FACILITATE REPLACEMENT OF THE EXISTING PLUMBING FIXTURES WITH NEW PLUMBING FIXTURES. DEMOLISH CW, HW, SAN, AND VENT PIPING THAT WILL NO LONGER BE USED AS PART OF THE IMPROVEMENTS WORK.
- DETAIL PLAN 5 AREA: NO PLUMBING DEMOLITION.

NOTE TO CONTRACTOR:

COORDINATE CONNECTION POINTS OF WATER CLOSET SAN DRAIN PIPING WITH THE EXISTING SAN DRAIN SYSTEM. PER PLUMBING CODE, A MAXIMUM OF 3 WATER CLOSETS MAY BE CONNECTED TO A 3" HORIZONTAL SAN DRAIN PIPE. WHERE A WATER CLOSET CONNECTS TO THE SANITARY DRAIN PIPING, WITH THREE WATER CLOSETS CONNECTED UP STREAM, THE SANITARY DRAIN PIPE SIZE SHALL BE 4" DIAMETER MINIMUM.

SHEET NOTES

A. SEE LEGEND AND GENERAL NOTES ON SHEET P1.00.

B. THESE PLANS ARE SCHEMATIC ONLY. THE DESIGN-BUILD CONTRACTOR IS RESPONSIBLE FOR THE FINAL DESIGN OF THE PLUMBING SYSTEMS.

C. PLUMBING CONTRACTOR SHALL COORDINATE ALL FIXTURE AND PIPE LOCATIONS WITH THE GENERAL, MECHANICAL, AND ELECTRICAL CONTRACTORS.

D. ALL P-TRAPS FOR FLOOR DRAINS SHALL BE PRIMED.

E. ROUTING OF EXISTING CW, HW, SAN, AND VENT PIPING IS UNKNOWN. FIELD-LOCATE EXISTING PIPING AND ADJUST THE IMPROVEMENT LAYOUTS SHOWN HERE ACCORDINGLY.

F. FOR ALL NEW PLUMBING FIXTURES, FURNISH AND INSTALL NEW STOP VALVES AND FLEX RISERS.

G. NEW VENTS MAY CONNECT TO THE BUILDING'S EXISTING VENT SYSTEM AND VENT THROUGH ROOF AT THE EXISTING PENETRATION IF THE EXISTING VENT SYSTEM IS OF SUITABLE SIZE FOR THE NEW LOADS.

H. PLUMBING FIXTURES TAGGED ON THIS DRAWING ARE NEW, BUT SHOWN SCREENED FOR CLARITY.

I. FURNISH AND INSTALL CLEANOUTS AS REQUIRED BY THE PLUMBING CODE.

KEY NOTES

1. 1-1/2" VENT UP IN WALL FROM MOP SINK. ROUTE VENT THRU ROOF, OR CONNECT TO EXISTING VENT PIPE AT AN EXISTING PIPE SIZE OF 2" OR LARGER.
2. CONNECT NEW CW AND HW PIPES TO EXISTING CW AND HW DISTRIBUTION SYSTEMS.
3. VENT UP THROUGH ROOF.
4. VENT UP FROM TWO FLOOR DRAINS AND ONE MOP SINK. VENT UP THROUGH ROOF.
5. VENT UP FROM TWO FLOOR DRAINS. VENT UP THROUGH ROOF.
6. CONNECT FIXTURE TO EXISTING CW, HW, SAN AND VENT PIPES, AS APPLICABLE TO THE FIXTURE TYPE.
7. CONNECT NOTED NEW LAVATORY TO EXISTING CW, SAN, AND VENT THAT SERVED THE DEMOLISHED WATER CLOSET AT THIS LOCATION. MODIFY SAN TO BE IN THE WALL. EXTEND HW PIPE FROM THE DEMOLISHED LAVATORY LOCATION ON THE WEST SIDE OF THE ROOM TO THE LOCATION OF THE NEW LAVATORY.
8. VENT UP IN WALL.
9. CONNECT NEW SAN TO EXISTING SAN SYSTEM.
10. VENT UP IN WALL FROM WATER CLOSET.
11. SAN UP TO WATER CLOSET.
12. SAN UP TO LAVATORY AND VENT.
13. SAN UP TO MOP SINK. FURNISH AND INSTALL P-TRAP.
14. SAN UP TO FLOOR DRAIN. FURNISH AND INSTALL P-TRAP AND TRAP PRIMER.
15. VENT UP IN WALL FROM MOP SINK.
16. SAN UP TO SINK AND VENT.

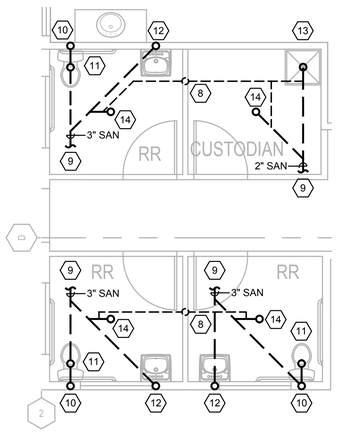

1 RESTROOMS UNDERSLAB PLAN
SCALE: 1/4"=1'-0"

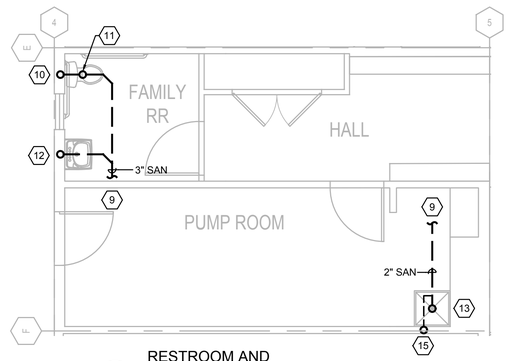

2 RESTROOM AND PUMP ROOM UNDERFLOOR PLAN
SCALE: 1/4"=1'-0"

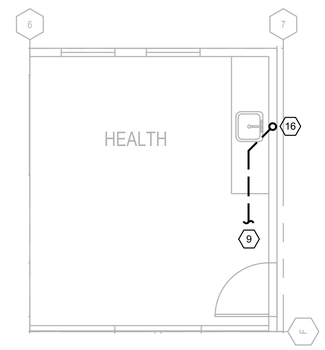

5 HEALTH ROOM UNDERFLOOR PLAN
SCALE: 1/4"=1'-0"

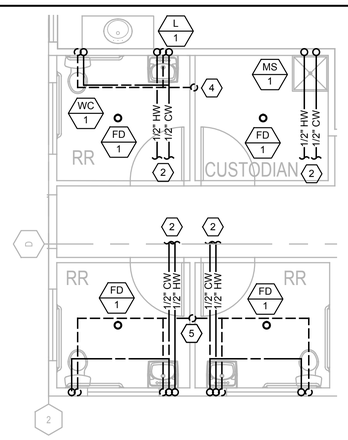

1 RESTROOMS PLUMBING PLAN
SCALE: 1/4"=1'-0"

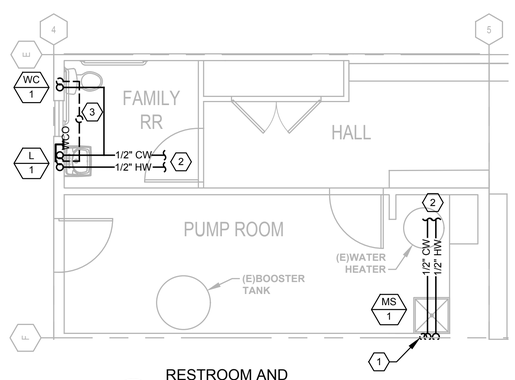

2 RESTROOM AND PUMP ROOM PLUMBING PLAN
SCALE: 1/4"=1'-0"

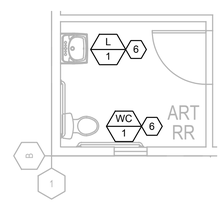

3 RESTROOM PLUMBING PLAN
SCALE: 1/4"=1'-0"

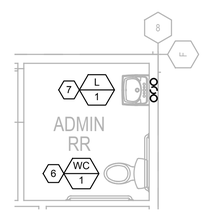

4 RESTROOM PLUMBING PLAN
SCALE: 1/4"=1'-0"

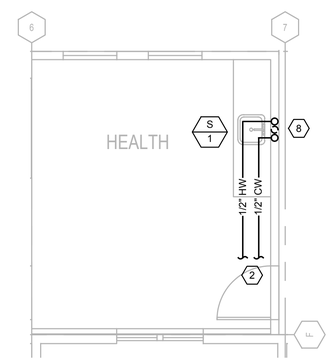

5 HEALTH ROOM PLUMBING PLAN
SCALE: 1/4"=1'-0"

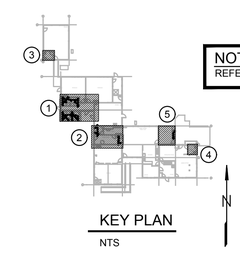

KEY PLAN
NTS

NOT FOR CONSTRUCTION
REFERENCE GENERAL NOTE 1 ON P1.00

1 INCH

BAR EQUALS ONE INCH WHEN DRAWING IS PLOTTED FULL SIZE. IF NOT, SCALE ACCORDINGLY

WILLOW WIND RENOVATIONS

1497 E. MAIN ST.
ASHLAND, OR 97520

arkitek: design and architecture, llc.

426 a street
ashland, or 97520
tel.: 541.591.9988

ArcSine engineering
A full-spectrum engineering company
950 Executive Way | Redding, CA 96002 | (530)222-7204
236 Disk Drive | Medford, OR 97501 | (541)842-4188
www.arc-sine.com

REGISTERED PROFESSIONAL ENGINEER 75561 OREGON JAN. 21, 2005 JOHN M. KELLER
EXPIRES: 06/30/21

Revision	Date

Date	02/01/2021
Job	2025
Drawn By	CCH
Checked By	
Scale	1/4" = 1'-0"

100%DD

Drawing Title

PLUMBING PLANS

Drawing No.

P2.00

Attachment A

PREVAILING WAGE RATES

for

Public Works Contracts in Oregon

Oregon Bureau of Labor and Industries

Prevailing Wage Rates for Public Works Contracts

Val Hoyle
Labor Commissioner
Rates Effective January 1, 2021

VAL HOYLE
Labor Commissioner

In this rate book are the new prevailing wage rates for Oregon non-residential public works projects, effective January 1, 2021.

Prevailing wage rates are the minimum hourly wages that must be paid to all workers employed on all public works projects. These rates are determined using data collected from a statewide construction industry survey of occupations and crafts performing commercial building and heavy and highway construction in 14 geographic regions of the state.

Thank you for your engagement in the process and commitment to Oregon law.

Our team is ready to help support you with any questions you have. We also offer regular, FREE informational seminars and webinars for contractors and public agencies. Contact us at pwremail@boli.state.or.us or (971) 673-0838.

Val Hoyle
Labor Commissioner

More information about prevailing wage rates:

The Oregon Bureau of Labor & Industries publishes the prevailing wage rates (PWR) that are required to be paid to workers on non-residential Oregon public works projects. Rates are published each year in January and July, with updates generally in April and October.

A separate document, *Definitions of Covered Occupations for Public Works Contracts in Oregon*, provides occupational definitions used to classify the duties performed on public works projects. These definitions are used to find the correct prevailing wage rate.

The rate book and definition publications are available online at www.oregon.gov/boli, as well as additional information and supporting documents and forms.

Please contact us at pwremail@boli.state.or.us or (971) 673-0839, for additional information such as:

- Applicable prevailing wage rates for projects (Generally, the rates in effect at the time the bid specifications are first advertised are those that apply for the duration of the project.)
- Federal Davis-Bacon rates (In cases where projects are subject to both state PWR and federal Davis-Bacon rates, the higher wage must be paid.)
- Required PWR provisions for specifications and contracts
- Apprentice rates

To receive email updates when rates are amended or to request copies of the PWR rate book, definitions book, or PWR law handbook, please email us at pwremail@boli.state.or.us.

TABLE OF CONTENTS

JANUARY 1, 2021

Forms necessary to comply with ORS 279C.800 through ORS 279C.870 may be found in the back of this booklet. Contractors are encouraged to use and keep on file the forms provided as master copies for use on future prevailing wage rate projects.

All of the information in this booklet can be accessed and printed from the Internet at: www.oregon.gov/BOLI

Pursuant to ORS 279C.800 to ORS 279C.870, the prevailing wage rates contained in this booklet have been adopted for use on public works contracts in Oregon. Additional copies of this booklet are available at cost, plus postage.

Required Postings for Prevailing Wage Contractors and Subcontractors

PREVAILING WAGE RATES

Every contractor and subcontractor engaged in work on a public works must post the applicable prevailing wage rates for that project in an obvious place on the worksite so workers have ready access to the information.

DETAILS OF FRINGE BENEFIT PROGRAMS

When a contractor or subcontractor provides or contributes to a health and welfare plan or a pension plan, or both, for employees who are working on a public works project, the details of all fringe benefit plans or programs must be posted on the worksite.

The posting must include a description of the plan or plans, information about how and where claims can be made and where to obtain more information. The notice must be posted in an obvious place on the work site in the same location as the prevailing wage rates.

WORK SCHEDULE

Contractors and subcontractors must give workers the regular work schedule (days of the week and number of hours per day) in writing before beginning work on the project.

Contractors and subcontractors may provide the schedule at the time of hire, prior to starting work on the contract, or by posting the schedule in a location frequented by employees, along with the prevailing wage rate information and any fringe benefit information.

If an employer fails to give written notice of the worker's schedule, the work schedule will be presumed to be a five-day schedule. The schedule may only be changed if the change is intended to be permanent and is not designed to evade the PWR overtime requirements.

ORS 279C.840(4); OAR 839-025-0033(1). ORS 279C.840(5); OAR 839-025-0033(2). ORS 279C.540(2); OAR 839-025-0034.

PUBLIC WORKS BONDS

Every contractor and subcontractor who works on public works projects subject to the prevailing wage rate (PWR) law is required to file a $30,000 **"PUBLIC WORKS BOND"** with the Construction Contractors' Board (CCB). This includes flagging and landscaping companies, temporary employment agencies, and sometimes sole proprietors.

The key elements of ORS 279C.830(2) and ORS 279C.836 specify that:

- Specifications for every contract for public works must contain language stating that the contractor and every subcontractor must have a public works bond filed with the CCB before starting work on the project, unless otherwise exempt.
- Every contract awarded by a contracting agency must contain language requiring the contractor:
  - To have a public works bond filed with the CCB before starting work on the project, unless otherwise exempt; and
  - To include in every subcontract a provision requiring the subcontractor to have a public works bond filed with the CCB before starting work on the project unless otherwise exempt
- Every subcontract that a contractor or subcontractor awards in connection with a public works contract between a contractor and a public agency must require any subcontractor to have a public works bond filed with the CCB before starting work on the public works project, unless otherwise exempt.
- Before permitting a subcontractor to start work on a public works project, contractors must first verify their subcontractors either have filed the bond, or have elected not to file a public works bond due to a bona fide exemption.
- The PWR bond is to be used exclusively for unpaid wages determined to be due by the Bureau of Labor & Industries.
- The bond is in effect continuously (you do not have to have one per project).
- A public works bond is in addition to any other required bond the contractor or subcontractor is required to obtain.

Exemptions:

- Allowed for a disadvantaged business enterprise, a minority-owned business, woman-owned business, a business that a service-disabled veteran owns or an emerging small business certified under ORS 200.055, for the first FOUR years of certification;
  - Exempt contractor must still file written verification of certification with the CCB, and give the CCB written notice that they elect not to file a bond.
  - The prime contractor must give written notice to the public agency that they elect not to file a public works bond.
  - Subcontractors must give written notice to the prime contractor that they elect not to file a public works bond.
- For projects with a total project cost of $100,000 or less, a public works bond is not required. (Note this is the total project cost, not an individual contract amount.)
- Emergency projects, as defined in ORS 279A.010(f).

Prevailing Wage Survey Wage Rate Appeal Process

1. To challenge or appeal a survey rate determination, you must submit a request in writing to the Labor Commissioner. You can send this to pwremail@boli.state.or.us.

2. The appeal should include:
    - a complete description of the issue, including the affected trade(s), and documentation or evidence (if available) supporting why the rate determination is incorrect
    - recommendations for how the rate could be more accurately determined

3. The written appeal will be reviewed by the Wage and Hour Division, which will recommend to the Labor Commissioner a course of action and proposed time frame for addressing the issue (such as a recommendation that further information be obtained, an investigation or study of the matter be conducted, a rate amendment or correction be issued, the next survey be modified, etc.).

4. The Labor Commissioner will review the division's recommendation and either approve, disapprove or modify the recommendation. The Prevailing Wage Advisory Committee may be consulted in some matters as deemed appropriate.

5. The requesting party will be notified of the Labor Commissioner's decision.

PREVAILING WAGE RATES

FINDING THE CORRECT PREVAILING WAGE RATE

To find the correct rate(s) required on your project, you will need:

- the date the project was first advertised for bid
- the region your project is in
- the duties of workers on the job

Generally, the rate you should look for is based on the date the project was first advertised for bid. (See OAR 839-025-0020(8) for information about projects that contract through a CM/GC, or contract manager/general contractor.)

Use this map to determine the region for your project:

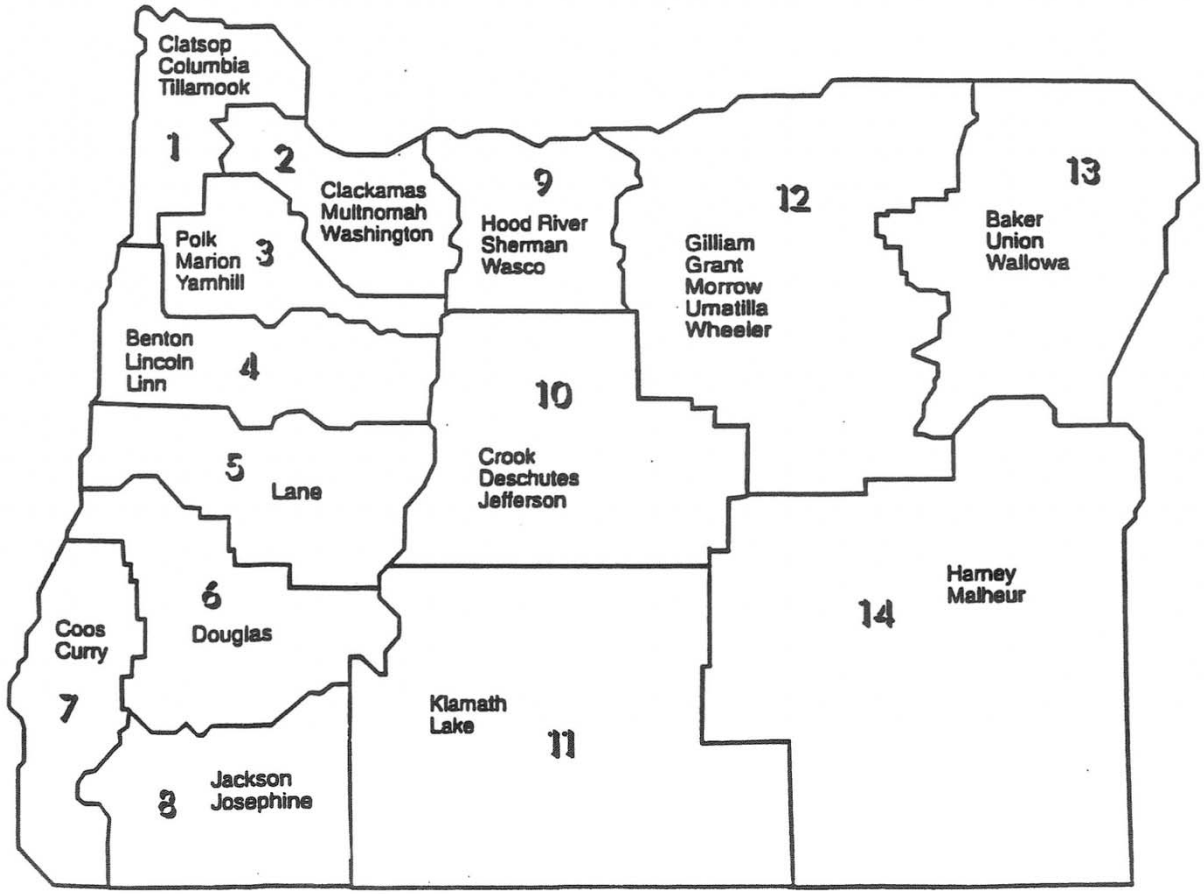

Determine the duties that are being performed by each worker
Use the booklet *Definitions of Covered Occupations* to find the definition that most closely matches the actual work performed by the worker. You can find this publication online at https://www.oregon.gov/boli/employers/Pages/occupational-definitions.aspx.

If you have any questions about work classifications, contact the Bureau of Labor & Industries at pwremail@boli.state.or.us or (971) 673-0839.

Find the correct rate in this rate book

1. Look up the region page
2. Find the correct occupation
3. Use the rate listed (see below for more information)

Is there a rate listed next to the occupation?
If so, that is the prevailing wage rate for this region and occupation. The prevailing wage rate is made up of an hourly base rate and an hourly fringe rate. The combination of these two amounts must be paid to each worker.

If the book directs you to "See Appendix," go to the back of the book and use the rate listed in the Appendix pages. It may include a group number, shift differential, hazard pay and/or zone pay which are added to the hourly base rate.

Apprentices must be paid the full fringe rate in those regions where the appendix rate does not apply. However, if the book directs you to "See Appendix," and the worker is registered in a bona fide apprenticeship program, contact the Bureau of Labor & Industries at (971) 673-0839 or pwremail@boli.state.or.us for the applicable hourly fringe rate.

For specific information or questions regarding the prevailing wage law, you may obtain a "Prevailing Wage Rate Laws" handbook by contacting us. An order form is also available in the back of this booklet.

We are happy to help you. More information is available on our website, https://www.oregon.gov/boli/employers/pages/prevailing-wage.aspx. You are welcome to contact us at pwremail@boli.state.or.us or (971) 673-0839.

Using the booklet, Definitions of Covered Occupations, find the definition that most closely matches the actual work being performed by the worker.

OCCUPATION	BASIC HOURLY RATE	FRINGE RATE
Asbestos Worker/Insulator	See Appendix	See Appendix
Boilermaker	See Appendix	See Appendix
Bricklayer/Stonemason	See Appendix	See Appendix
Bridge and Highway Carpenter (See Carpenter Group 5)	See Appendix	See Appendix
Carpenter Group 1 & 2	See Appendix	See Appendix
Cement Mason	See Appendix	See Appendix
Diver	See Appendix	See Appendix
Diver Tender	See Appendix	See Appendix
Dredger	See Appendix	See Appendix
Drywall, Lather, Acoustical Carpenter & Ceiling Installer	See Appendix	See Appendix
Drywall Taper (See Painter & Drywall Taper)	See Appendix	See Appendix
Electrician	See Appendix	See Appendix
Elevator Constructor, Installer and Mechanic	See Appendix	See Appendix
Fence Constructor (Non-metal)	$28.24	$11.01
Fence Erector (Metal)	$22.10	$4.13
Flagger (See Laborer Group 3)	See Appendix	See Appendix
Glazier	See Appendix	See Appendix
Hazardous Materials Handler/Mechanic	$21.83	$9.48
Highway and Parking Striper	$26.11	$8.20
Ironworker	$35.94	$23.35
Laborer Group 1	See Appendix	See Appendix
Laborer Group 2	See Appendix	See Appendix
Laborer Group 3	See Appendix	See Appendix
Landscape Laborer/Technician	$19.92	$4.96
Limited Energy Electrician	See Appendix	See Appendix
Line Constructor	See Appendix	See Appendix
Marble Setter	See Appendix	See Appendix
Millwright (See Carpenter Group 3)	See Appendix	See Appendix
Painter	$24.06	$8.78
Piledriver (See Carpenter Group 6)	See Appendix	See Appendix
Plasterer and Stucco Mason	$30.51	$17.22
Plumber/Pipefitter/Steamfitter	See Appendix	See Appendix
Power Equipment Operator Group 1	See Appendix	See Appendix
Power Equipment Operator Group 1A	See Appendix	See Appendix
Power Equipment Operator Group 1B	See Appendix	See Appendix
Power Equipment Operator Group 2	See Appendix	See Appendix
Power Equipment Operator Group 3	See Appendix	See Appendix
Power Equipment Operator Group 4	See Appendix	See Appendix
Power Equipment Operator Group 5	See Appendix	See Appendix
Power Equipment Operator Group 6	See Appendix	See Appendix

Using the booklet, Definitions of Covered Occupations, find the definition that most closely matches the actual work being performed by the worker.

OCCUPATION	BASIC HOURLY RATE	FRINGE RATE
Roofer	$29.11	$11.91
Sheet Metal Worker	See Appendix	See Appendix
Soft Floor Layer	See Appendix	See Appendix
Sprinkler Fitter	See Appendix	See Appendix
Tender to Mason Trades (Brick and Stonemason, Mortar Mixer, Hod Carrier)	See Appendix	See Appendix
Tender to Plasterer and Stucco Mason	$26.12	$12.29
Testing, Adjusting, and Balancing (TAB) Technician	See Appendix	See Appendix
Tilesetter/Terrazzo Worker: Hard Tilesetter	See Appendix	See Appendix
Tile, Terrazzo, and Marble Finisher	See Appendix	See Appendix
Truck Driver – All Groups	$24.64	$5.91

Using the booklet, Definitions of Covered Occupations, find the definition that most closely matches the actual work being performed by the worker.

OCCUPATION	BASIC HOURLY RATE	FRINGE RATE
Asbestos Worker/Insulator	See Appendix	See Appendix
Boilermaker	$38.43	$23.09
Bricklayer/Stonemason	See Appendix	See Appendix
Bridge & Highway Carpenter (See Carpenter Group 5)	See Appendix	See Appendix
Carpenter Group 1 & 2	See Appendix	See Appendix
Cement Mason	See Appendix	See Appendix
Diver	See Appendix	See Appendix
Diver Tender	See Appendix	See Appendix
Dredger	See Appendix	See Appendix
Drywall, Lather, Acoustical Carpenter & Ceiling Installer	See Appendix	See Appendix
Drywall Taper (See Painter & Drywall Taper)	See Appendix	See Appendix
Electrician	See Appendix	See Appendix
Elevator Constructor, Installer and Mechanic	See Appendix	See Appendix
Fence Constructor (Non-metal)	$28.24	$11.01
Fence Erector (Metal)	$22.10	$4.13
Flagger (See Laborer Group 3)	See Appendix	See Appendix
Glazier	See Appendix	See Appendix
Hazardous Materials Handler/Mechanic	$21.83	$9.48
Highway and Parking Striper	$26.11	$8.20
Ironworker	See Appendix	See Appendix
Laborer Group 1	See Appendix	See Appendix
Laborer Group 2	See Appendix	See Appendix
Laborer Group 3	See Appendix	See Appendix
Landscape Laborer/Technician	$19.92	$4.96
Limited Energy Electrician	$31.64	$10.26
Line Constructor	See Appendix	See Appendix
Marble Setter	See Appendix	See Appendix
Millwright (See Carpenter Group 3)	See Appendix	See Appendix
Painter	$24.06	$8.78
Piledriver (See Carpenter Group 6)	See Appendix	See Appendix
Plasterer and Stucco Mason	See Appendix	See Appendix
Plumber/Pipefitter/Steamfitter	See Appendix	See Appendix
Power Equipment Operator Group 1	See Appendix	See Appendix
Power Equipment Operator Group 1A	See Appendix	See Appendix
Power Equipment Operator Group 1B	See Appendix	See Appendix
Power Equipment Operator Group 2	See Appendix	See Appendix
Power Equipment Operator Group 3	See Appendix	See Appendix
Power Equipment Operator Group 4	See Appendix	See Appendix
Power Equipment Operator Group 5	See Appendix	See Appendix
Power Equipment Operator Group 6	See Appendix	See Appendix

Using the booklet, Definitions of Covered Occupations, find the definition that most closely matches the actual work being performed by the worker.

OCCUPATION	BASIC HOURLY RATE	FRINGE RATE
Roofer	See Appendix	See Appendix
Sheet Metal Worker	See Appendix	See Appendix
Soft Floor Layer	See Appendix	See Appendix
Sprinkler Fitter	See Appendix	See Appendix
Tender to Mason Trades (Brick and Stonemason, Mortar Mixer, Hod Carrier)	See Appendix	See Appendix
Tender to Plasterer and Stucco Mason	See Appendix	See Appendix
Testing, Adjusting, and Balancing (TAB) Technician	$37.29	$14.60
Tilesetter/Terrazzo Worker: Hard Tilesetter	See Appendix	See Appendix
Tile, Terrazzo, and Marble Finisher	See Appendix	See Appendix
Truck Driver – All Groups	$24.64	$5.91

Using the booklet, Definitions of Covered Occupations, find the definition that most closely matches the actual work being performed by the worker.

OCCUPATION	BASIC HOURLY RATE	FRINGE RATE
Asbestos Worker/Insulator	See Appendix	See Appendix
Boilermaker	$38.43	$23.09
Bricklayer/Stonemason	See Appendix	See Appendix
Bridge and Highway Carpenter (See Carpenter Group 5)	See Appendix	See Appendix
Carpenter Group 1 & 2	See Appendix	See Appendix
Cement Mason	See Appendix	See Appendix
Diver	See Appendix	See Appendix
Diver Tender	See Appendix	See Appendix
Dredger	See Appendix	See Appendix
Drywall, Lather, Acoustical Carpenter & Ceiling Installer	See Appendix	See Appendix
Drywall Taper (See Painter & Drywall Taper)	See Appendix	See Appendix
Electrician	See Appendix	See Appendix
Elevator Constructor, Installer and Mechanic	See Appendix	See Appendix
Fence Constructor (Non-metal)	$28.24	$11.01
Fence Erector (Metal)	$22.10	$4.13
Flagger (See Laborer Group 3)	See Appendix	See Appendix
Glazier	See Appendix	See Appendix
Hazardous Materials Handler/Mechanic	$21.83	$9.48
Highway and Parking Striper	$26.11	$8.20
Ironworker	$35.94	$23.35
Laborer Group 1	See Appendix	See Appendix
Laborer Group 2	See Appendix	See Appendix
Laborer Group 3	See Appendix	See Appendix
Landscape Laborer/Technician	$19.92	$4.96
Limited Energy Electrician	$31.64	$10.26
Line Constructor	See Appendix	See Appendix
Marble Setter	See Appendix	See Appendix
Millwright (See Carpenter Group 3)	See Appendix	See Appendix
Painter	$24.06	$8.78
Piledriver (See Carpenter Group 6)	See Appendix	See Appendix
Plasterer and Stucco Mason	See Appendix	See Appendix
Plumber/Pipefitter/Steamfitter	See Appendix	See Appendix
Power Equipment Operator Group 1	See Appendix	See Appendix
Power Equipment Operator Group 1A	See Appendix	See Appendix
Power Equipment Operator Group 1B	See Appendix	See Appendix
Power Equipment Operator Group 2	See Appendix	See Appendix
Power Equipment Operator Group 3	See Appendix	See Appendix
Power Equipment Operator Group 4	See Appendix	See Appendix
Power Equipment Operator Group 5	See Appendix	See Appendix
Power Equipment Operator Group 6	See Appendix	See Appendix

Using the booklet, Definitions of Covered Occupations, find the definition that most closely matches the actual work being performed by the worker.

OCCUPATION	BASIC HOURLY RATE	FRINGE RATE
Roofer	See Appendix	See Appendix
Sheet Metal Worker	$37.92	$16.17
Soft Floor Layer	See Appendix	See Appendix
Sprinkler Fitter	See Appendix	See Appendix
Tender to Mason Trades (Brick and Stonemason, Mortar Mixer, Hod Carrier)	See Appendix	See Appendix
Tender to Plasterer and Stucco Mason	$26.12	$12.29
Testing, Adjusting, and Balancing (TAB) Technician	See Appendix	See Appendix
Tilesetter/Terrazzo Worker: Hard Tilesetter	See Appendix	See Appendix
Tile, Terrazzo, and Marble Finisher	See Appendix	See Appendix
Truck Driver – All Groups	$24.64	$5.91

Using the booklet, Definitions of Covered Occupations, find the definition that most closely matches the actual work being performed by the worker.

OCCUPATION	BASIC HOURLY RATE	FRINGE RATE
Asbestos Worker/Insulator	See Appendix	See Appendix
Boilermaker	See Appendix	See Appendix
Bricklayer/Stonemason	See Appendix	See Appendix
Bridge and Highway Carpenter (See Carpenter Group 5)	See Appendix	See Appendix
Carpenter Group 1 & 2	See Appendix	See Appendix
Cement Mason	See Appendix	See Appendix
Diver	See Appendix	See Appendix
Diver Tender	See Appendix	See Appendix
Dredger	$42.22	$14.33
Drywall, Lather, Acoustical Carpenter & Ceiling Installer	See Appendix	See Appendix
Drywall Taper (See Painter & Drywall Taper)	See Appendix	See Appendix
Electrician	See Appendix	See Appendix
Elevator Constructor, Installer and Mechanic	$50.16	$38.26
Fence Constructor (Non-metal)	$28.24	$11.01
Fence Erector (Metal)	$22.10	$4.13
Flagger (See Labor Group 3)	See Appendix	See Appendix
Glazier	See Appendix	See Appendix
Hazardous Materials Handler/Mechanic	$21.83	$9.48
Highway and Parking Striper	$26.11	$8.20
Ironworker	$35.94	$23.35
Laborer Group 1	See Appendix	See Appendix
Laborer Group 2	See Appendix	See Appendix
Laborer Group 3	See Appendix	See Appendix
Landscape Laborer/Technician	$19.92	$4.96
Limited Energy Electrician	$31.64	$10.26
Line Constructor	$51.43	$20.25
Marble Setter	See Appendix	See Appendix
Millwright (See Carpenter Group 3)	See Appendix	See Appendix
Painter	$24.06	$8.78
Piledriver (See Carpenter Group 6)	See Appendix	See Appendix
Plasterer and Stucco Mason	See Appendix	See Appendix
Plumber/Pipefitter/Steamfitter	See Appendix	See Appendix
Power Equipment Operator Group 1	See Appendix	See Appendix
Power Equipment Operator Group 1A	See Appendix	See Appendix
Power Equipment Operator Group 1B	See Appendix	See Appendix
Power Equipment Operator Group 2	See Appendix	See Appendix
Power Equipment Operator Group 3	See Appendix	See Appendix
Power Equipment Operator Group 4	See Appendix	See Appendix
Power Equipment Operator Group 5	See Appendix	See Appendix
Power Equipment Operator Group 6	See Appendix	See Appendix

Using the booklet, Definitions of Covered Occupations, find the definition that most closely matches the actual work being performed by the worker.

OCCUPATION	BASIC HOURLY RATE	FRINGE RATE
Roofer	See Appendix	See Appendix
Sheet Metal Worker	See Appendix	See Appendix
Soft Floor Layer	See Appendix	See Appendix
Sprinkler Fitter	See Appendix	See Appendix
Tender to Mason Trades (Brick and Stonemason, Mortar Mixer, Hod Carrier)	See Appendix	See Appendix
Tender to Plasterer and Stucco Mason	$26.12	$12.29
Testing, Adjusting, and Balancing (TAB) Technician	$37.29	$14.60
Tilesetter/Terrazzo Worker: Hard Tilesetter	See Appendix	See Appendix
Tile, Terrazzo, and Marble Finisher	See Appendix	See Appendix
Truck Driver – All Groups	$24.64	$5.91

Using the booklet, Definitions of Covered Occupations, find the definition that most closely matches the actual work being performed by the worker.

OCCUPATION	BASIC HOURLY RATE	FRINGE RATE
Asbestos Worker/Insulator	See Appendix	See Appendix
Boilermaker	See Appendix	See Appendix
Bricklayer/Stonemason	See Appendix	See Appendix
Bridge and Highway Carpenter (See Carpenter Group 5)	See Appendix	See Appendix
Carpenter Group 1 & 2	See Appendix	See Appendix
Cement Mason	See Appendix	See Appendix
Diver	See Appendix	See Appendix
Diver Tender	See Appendix	See Appendix
Dredger	See Appendix	See Appendix
Drywall, Lather, Acoustical Carpenter & Ceiling Installer	See Appendix	See Appendix
Drywall Taper (See Painter & Drywall Taper)	See Appendix	See Appendix
Electrician	See Appendix	See Appendix
Elevator Constructor, Installer and Mechanic	See Appendix	See Appendix
Fence Constructor (Non-metal)	$28.24	$11.01
Fence Erector (Metal)	$22.10	$4.13
Flagger (See Laborer Group 3)	See Appendix	See Appendix
Glazier	See Appendix	See Appendix
Hazardous Materials Handler/Mechanic	$21.83	$9.48
Highway and Parking Striper	$26.11	$8.20
Ironworker	See Appendix	See Appendix
Laborer Group 1	See Appendix	See Appendix
Laborer Group 2	See Appendix	See Appendix
Laborer Group 3	See Appendix	See Appendix
Landscape Laborer/Technician	$19.92	$4.96
Limited Energy Electrician	$31.64	$10.26
Line Constructor	See Appendix	See Appendix
Marble Setter	See Appendix	See Appendix
Millwright (See Carpenter Group 3)	See Appendix	See Appendix
Painter	$24.06	$8.78
Piledriver (See Carpenter Group 6)	See Appendix	See Appendix
Plasterer and Stucco Mason	See Appendix	See Appendix
Plumber/Pipefitter/Steamfitter	See Appendix	See Appendix
Power Equipment Operator Group 1	See Appendix	See Appendix
Power Equipment Operator Group 1A	See Appendix	See Appendix
Power Equipment Operator Group 1B	See Appendix	See Appendix
Power Equipment Operator Group 2	See Appendix	See Appendix
Power Equipment Operator Group 3	See Appendix	See Appendix
Power Equipment Operator Group 4	See Appendix	See Appendix
Power Equipment Operator Group 5	See Appendix	See Appendix
Power Equipment Operator Group 6	See Appendix	See Appendix

Using the booklet, Definitions of Covered Occupations, find the definition that most closely matches the actual work being performed by the worker.

OCCUPATION	BASIC HOURLY RATE	FRINGE RATE
Roofer	See Appendix	See Appendix
Sheet Metal Worker	See Appendix	See Appendix
Soft Floor Layer	See Appendix	See Appendix
Sprinkler Fitter	See Appendix	See Appendix
Tender to Mason Trades (Brick and Stonemason, Mortar Mixer, Hod Carrier)	See Appendix	See Appendix
Tender to Plasterer and Stucco Mason	$26.12	$12.29
Testing, Adjusting, and Balancing (TAB) Technician	$37.29	$14.60
Tilesetter/Terrazzo Worker: Hard Tilesetter	See Appendix	See Appendix
Tile, Terrazzo, and Marble Finisher	See Appendix	See Appendix
Truck Driver – All Groups	$24.64	$5.91

Using the booklet, Definitions of Covered Occupations, find the definition that most closely matches the actual work being performed by the worker.

OCCUPATION	BASIC HOURLY RATE	FRINGE RATE
Asbestos Worker/Insulator	See Appendix	See Appendix
Boilermaker	See Appendix	See Appendix
Bricklayer/Stonemason	See Appendix	See Appendix
Bridge and Highway Carpenter (See Carpenter Group 5)	See Appendix	See Appendix
Carpenter Group 1 & 2	See Appendix	See Appendix
Cement Mason	$30.21	$13.18
Diver	See Appendix	See Appendix
Diver Tender	See Appendix	See Appendix
Dredger	$42.22	$14.33
Drywall, Lather, Acoustical Carpenter & Ceiling Installer	$37.41	$16.91
Drywall Taper	$34.13	$14.58
Electrician	See Appendix	See Appendix
Elevator Constructor, Installer and Mechanic	See Appendix	See Appendix
Fence Constructor (Non-metal)	$28.24	$11.01
Fence Erector (Metal)	$22.10	$4.13
Flagger (See Laborer Group 3)	See Appendix	See Appendix
Glazier	See Appendix	See Appendix
Hazardous Material Handler/Mechanic	$21.83	$9.48
Highway and Parking Striper	See Appendix	See Appendix
Ironworker	$35.94	$23.35
Laborer Group 1	See Appendix	See Appendix
Laborer Group 2	See Appendix	See Appendix
Laborer Group 3	See Appendix	See Appendix
Landscape Laborer/Technician	$19.92	$4.96
Limited Energy Electrician	$31.64	$10.26
Line Constructor	$51.43	$20.25
Marble Setter	$37.17	$17.25
Millwright (See Carpenter Group 3)	See Appendix	See Appendix
Painter	See Appendix	See Appendix
Piledriver (See Carpenter Group 6)	See Appendix	See Appendix
Plasterer and Stucco Mason	$30.51	$17.22
Plumber/Pipefitter/Steamfitter	$47.40	$27.17
Power Equipment Operator Group 1	See Appendix	See Appendix
Power Equipment Operator Group 1A	See Appendix	See Appendix
Power Equipment Operator Group 1B	See Appendix	See Appendix
Power Equipment Operator Group 2	See Appendix	See Appendix
Power Equipment Operator Group 3	See Appendix	See Appendix
Power Equipment Operator Group 4	See Appendix	See Appendix
Power Equipment Operator Group 5	See Appendix	See Appendix
Power Equipment Operator Group 6	See Appendix	See Appendix

Using the booklet, Definitions of Covered Occupations, find the definition that most closely matches the actual work being performed by the worker.

OCCUPATION	BASIC HOURLY RATE	FRINGE RATE
Roofer	$29.11	$11.91
Sheet Metal Worker	See Appendix	See Appendix
Soft Floor Layer	$27.28	$11.29
Sprinkler Fitter	See Appendix	See Appendix
Tender to Mason Trades (Brick and Stonemason, Mortar Mixer, Hod Carrier)	$31.54	$11.80
Tender to Plasterer and Stucco Mason	$26.12	$12.29
Testing, Adjusting, and Balancing (TAB) Technician	$37.29	$14.60
Tilesetter/Terrazzo Worker: Hard Tilesetter	$31.85	$19.33
Tile, Terrazzo, and Marble Finisher	See Appendix	See Appendix
Truck Driver – All Groups	$24.64	$5.91

Using the booklet, Definitions of Covered Occupations, find the definition that most closely matches the actual work being performed by the worker.

OCCUPATION	BASIC HOURLY RATE	FRINGE RATE
Asbestos Worker/Insulator	See Appendix	See Appendix
Boilermaker	$38.43	$23.09
Bricklayer/Stonemason	See Appendix	See Appendix
Bridge and Highway Carpenter (See Carpenter Group 5)	See Appendix	See Appendix
Carpenter Group 1 & 2	See Appendix	See Appendix
Cement Mason	$30.21	$13.18
Diver	See Appendix	See Appendix
Diver Tender	See Appendix	See Appendix
Dredger	See Appendix	See Appendix
Drywall, Lather, Acoustical Carpenter & Ceiling Installer	$37.41	$16.91
Drywall Taper	$34.13	$14.58
Electrician	See Appendix	See Appendix
Elevator Constructor, Installer and Mechanic	See Appendix	See Appendix
Fence Constructor (Non-metal)	$28.24	$11.01
Fence Erector (Metal)	$22.10	$4.13
Flagger (See Laborer Group 3)	See Appendix	See Appendix
Glazier	See Appendix	See Appendix
Hazardous Materials Handler/Mechanic	$21.83	$9.48
Highway and Parking Striper	$26.11	$8.20
Ironworker	See Appendix	See Appendix
Laborer Group 1	See Appendix	See Appendix
Laborer Group 2	See Appendix	See Appendix
Laborer Group 3	See Appendix	See Appendix
Landscape Laborer/Technician	$19.92	$4.96
Limited Energy Electrician	See Appendix	See Appendix
Line Constructor	See Appendix	See Appendix
Marble Setter	$37.17	$17.25
Millwright	$31.56	$11.74
Painter	See Appendix	See Appendix
Piledriver (See Carpenter Group 6)	See Appendix	See Appendix
Plasterer and Stucco Mason	$30.51	$17.22
Plumber/Pipefitter/Steamfitter	See Appendix	See Appendix
Power Equipment Operator Group 1	See Appendix	See Appendix
Power Equipment Operator Group 1A	See Appendix	See Appendix
Power Equipment Operator Group 1B	See Appendix	See Appendix
Power Equipment Operator Group 2	See Appendix	See Appendix
Power Equipment Operator Group 3	See Appendix	See Appendix
Power Equipment Operator Group 4	See Appendix	See Appendix
Power Equipment Operator Group 5	See Appendix	See Appendix
Power Equipment Operator Group 6	See Appendix	See Appendix

Using the booklet, Definitions of Covered Occupations, find the definition that most closely matches the actual work being performed by the worker.

OCCUPATION	BASIC HOURLY RATE	FRINGE RATE
Roofer	$29.11	$11.91
Sheet Metal Worker	See Appendix	See Appendix
Soft Floor Layer	$27.28	$11.29
Sprinkler Fitter	See Appendix	See Appendix
Tender to Mason Trades (Brick and Stonemason, Mortar Mixer, Hod Carrier)	See Appendix	See Appendix
Tender to Plasterer and Stucco Mason	See Appendix	See Appendix
Testing, Adjusting, and Balancing (TAB) Technician	$37.29	$14.60
Tilesetter/Terrazzo Worker: Hard Tilesetter	See Appendix	See Appendix
Tile, Terrazzo, and Marble Finisher	See Appendix	See Appendix
Truck Driver – All Groups	$24.64	$5.91

Using the booklet, Definitions of Covered Occupations, find the definition that most closely matches the actual work being performed by the worker.

OCCUPATION	BASIC HOURLY RATE	FRINGE RATE
Asbestos Worker/Insulator	See Appendix	See Appendix
Boilermaker	See Appendix	See Appendix
Bricklayer/Stonemason	$37.63	$18.43
Bridge and Highway Carpenter (See Carpenter Group 5)	See Appendix	See Appendix
Carpenter Group 1 & 2	$32.88	$13.06
Cement Mason	$30.21	$13.18
Diver	See Appendix	See Appendix
Diver Tender	See Appendix	See Appendix
Dredger	See Appendix	See Appendix
Drywall, Lather, Acoustical Carpenter & Ceiling Installer	$37.41	$16.91
Drywall Taper	$34.13	$14.58
Electrician	See Appendix	See Appendix
Elevator Constructor, Installer and Mechanic	See Appendix	See Appendix
Fence Constructor (Non-metal)	$28.24	$11.01
Fence Erector (Metal)	$22.10	$4.13
Flagger (See Laborer Group 3)	See Appendix	See Appendix
Glazier	See Appendix	See Appendix
Hazardous Materials Handler/Mechanic	$21.83	$9.48
Highway and Parking Striper	$26.11	$8.20
Ironworker	$35.94	$23.35
Laborer Group 1	See Appendix	See Appendix
Laborer Group 2	See Appendix	See Appendix
Laborer Group 3	See Appendix	See Appendix
Landscape Laborer/Technician	$19.92	$4.96
Limited Energy Electrician	$31.64	$10.26
Line Constructor	See Appendix	See Appendix
Marble Setter	See Appendix	See Appendix
Millwright	$31.56	$11.74
Painter	$24.06	$8.78
Piledriver (See Carpenter Group 6)	See Appendix	See Appendix
Plasterer and Stucco Mason	$30.51	$17.22
Plumber/Pipefitter/Steamfitter	See Appendix	See Appendix
Power Equipment Operator Group 1	See Appendix	See Appendix
Power Equipment Operator Group 1A	See Appendix	See Appendix
Power Equipment Operator Group 1B	See Appendix	See Appendix
Power Equipment Operator Group 2	See Appendix	See Appendix
Power Equipment Operator Group 3	See Appendix	See Appendix
Power Equipment Operator Group 4	See Appendix	See Appendix
Power Equipment Operator Group 5	See Appendix	See Appendix
Power Equipment Operator Group 6	See Appendix	See Appendix

Using the booklet, Definitions of Covered Occupations, find the definition that most closely matches the actual work being performed by the worker.

OCCUPATION	BASIC HOURLY RATE	FRINGE RATE
Roofer	$29.11	$11.91
Sheet Metal Worker	$37.92	$16.17
Soft Floor Layer	$27.28	$11.29
Sprinkler Fitter	See Appendix	See Appendix
Tender to Mason Trades (Brick and Stonemason, Mortar Mixer, Hod Carrier)	$31.54	$11.80
Tender to Plasterer and Stucco Mason	$26.12	$12.29
Testing, Adjusting, and Balancing (TAB) Technician	$37.29	$14.60
Tilesetter/Terrazzo Worker: Hard Tilesetter	$31.85	$19.33
Tile, Terrazzo, and Marble Finisher	$25.65	$14.40
Truck Driver – All Groups	$24.64	$5.91

Using the booklet, Definitions of Covered Occupations, find the definition that most closely matches the actual work being performed by the worker.

OCCUPATION	BASIC HOURLY RATE	FRINGE RATE
Asbestos Worker/Insulator	See Appendix	See Appendix
Boilermaker	See Appendix	See Appendix
Bricklayer/Stonemason	See Appendix	See Appendix
Bridge and Highway Carpenter (See Carpenter Group 5)	See Appendix	See Appendix
Carpenter Group 1 & 2	See Appendix	See Appendix
Cement Mason	$30.21	$13.18
Diver	See Appendix	See Appendix
Diver Tender	See Appendix	See Appendix
Dredger	See Appendix	See Appendix
Drywall, Lather, Acoustical Carpenter & Ceiling Installer	See Appendix	See Appendix
Drywall Taper (See Painter & Drywall Taper)	See Appendix	See Appendix
Electrician	See Appendix	See Appendix
Elevator Constructor, Installer and Mechanic	See Appendix	See Appendix
Fence Constructor (Non-metal)	$28.24	$11.01
Fence Erector (Metal)	$22.10	$4.13
Flagger (See Laborer Group 3)	See Appendix	See Appendix
Glazier	See Appendix	See Appendix
Hazardous Materials Handler/Mechanic	$21.83	$9.48
Highway and Parking Striper	$26.11	$8.20
Ironworker	See Appendix	See Appendix
Laborer Group 1	See Appendix	See Appendix
Laborer Group 2	See Appendix	See Appendix
Laborer Group 3	See Appendix	See Appendix
Landscape Laborer/Technician	$19.92	$4.96
Limited Energy Electrician	See Appendix	See Appendix
Line Constructor	See Appendix	See Appendix
Marble Setter	See Appendix	See Appendix
Millwright (See Carpenter Group 3)	See Appendix	See Appendix
Painter	$24.06	$8.78
Piledriver (See Carpenter Group 6)	See Appendix	See Appendix
Plasterer and Stucco Mason	$30.51	$17.22
Plumber/Pipefitter/Steamfitter	See Appendix	See Appendix
Power Equipment Operator Group 1	See Appendix	See Appendix
Power Equipment Operator Group 1A	See Appendix	See Appendix
Power Equipment Operator Group 1B	See Appendix	See Appendix
Power Equipment Operator Group 2	See Appendix	See Appendix
Power Equipment Operator Group 3	See Appendix	See Appendix
Power Equipment Operator Group 4	See Appendix	See Appendix
Power Equipment Operator Group 5	See Appendix	See Appendix
Power Equipment Operator Group 6	See Appendix	See Appendix

Using the booklet, Definitions of Covered Occupations, find the definition that most closely matches the actual work being performed by the worker.

OCCUPATION	BASIC HOURLY RATE	FRINGE RATE
Roofer	$29.11	$11.91
Sheet Metal Worker	See Appendix	See Appendix
Soft Floor Layer	$27.28	$11.29
Sprinkler Fitter	See Appendix	See Appendix
Tender to Mason Trades (Brick and Stonemason, Mortar Mixer, Hod Carrier)	See Appendix	See Appendix
Tender to Plasterer and Stucco Mason	$26.12	$12.29
Testing, Adjusting, and Balancing (TAB) Technician	See Appendix	See Appendix
Tilesetter/Terrazzo Worker: Hard Tilesetter	See Appendix	See Appendix
Tile, Terrazzo, and Marble Finisher	See Appendix	See Appendix
Truck Driver – All Groups	$24.64	$5.91

Using the booklet, Definitions of Covered Occupations, find the definition that most closely matches the actual work being performed by the worker.

OCCUPATION	BASIC HOURLY RATE	FRINGE RATE
Asbestos Worker/Insulator	See Appendix	See Appendix
Boilermaker	$38.43	$23.09
Bricklayer/Stonemason	See Appendix	See Appendix
Bridge and Highway Carpenter (See Carpenter Group 5)	See Appendix	See Appendix
Carpenter Group 1 & 2	See Appendix	See Appendix
Cement Mason	See Appendix	See Appendix
Diver	See Appendix	See Appendix
Diver Tender	See Appendix	See Appendix
Dredger	See Appendix	See Appendix
Drywall, Lather, Acoustical Carpenter & Ceiling Installer	See Appendix	See Appendix
Drywall Taper (See Painter & Drywall Taper)	See Appendix	See Appendix
Electrician	See Appendix	See Appendix
Elevator Constructor, Installer and Mechanic	$50.16	$38.26
Fence Constructor (Non-metal)	$28.24	$11.01
Fence Erector (Metal)	$22.10	$4.13
Flagger (See Laborer Group 3)	See Appendix	See Appendix
Glazier	$38.53	$20.11
Hazardous Materials Handler/Mechanic	$21.83	$9.48
Highway and Parking Striper	See Appendix	See Appendix
Ironworker	See Appendix	See Appendix
Laborer Group 1	See Appendix	See Appendix
Laborer Group 2	See Appendix	See Appendix
Laborer Group 3	See Appendix	See Appendix
Landscape Laborer/Technician	$19.92	$4.96
Limited Energy Electrician	$31.64	$10.26
Line Constructor	See Appendix	See Appendix
Marble Setter	See Appendix	See Appendix
Millwright	$31.56	$11.74
Painter	$24.06	$8.78
Piledriver (See Carpenter Group 6)	See Appendix	See Appendix
Plasterer and Stucco Mason	$30.51	$17.22
Plumber/Pipefitter/Steamfitter	See Appendix	See Appendix
Power Equipment Operator Group 1	See Appendix	See Appendix
Power Equipment Operator Group 1A	See Appendix	See Appendix
Power Equipment Operator Group 1B	See Appendix	See Appendix
Power Equipment Operator Group 2	See Appendix	See Appendix
Power Equipment Operator Group 3	See Appendix	See Appendix
Power Equipment Operator Group 4	See Appendix	See Appendix
Power Equipment Operator Group 5	See Appendix	See Appendix
Power Equipment Operator Group 6	See Appendix	See Appendix

Using the booklet, Definitions of Covered Occupations, find the definition that most closely matches the actual work being performed by the worker.

OCCUPATION	BASIC HOURLY RATE	FRINGE RATE
Roofer	$29.11	$11.91
Sheet Metal Worker	See Appendix	See Appendix
Soft Floor Layer	See Appendix	See Appendix
Sprinkler Fitter	See Appendix	See Appendix
Tender to Mason Trades (Brick and Stonemason, Mortar Mixer, Hod Carrier)	$31.54	$11.80
Tender to Plasterer and Stucco Mason	See Appendix	See Appendix
Testing, Adjusting, and Balancing (TAB) Technician	$37.29	$14.60
Tilesetter/Terrazzo Worker: Hard Tilesetter	$31.85	$19.33
Tile, Terrazzo, and Marble Finisher	$25.65	$14.40
Truck Driver – All Groups	$24.64	$5.91

Using the booklet, Definitions of Covered Occupations, find the definition that most closely matches the actual work being performed by the worker.

OCCUPATION	BASIC HOURLY RATE	FRINGE RATE
Asbestos Worker/Insulator	See Appendix	See Appendix
Boilermaker	See Appendix	See Appendix
Bricklayer/Stonemason	See Appendix	See Appendix
Bridge and Highway Carpenter	$38.22	$15.60
Carpenter Group 1 & 2	$32.88	$13.06
Cement Mason	$30.21	$13.18
Diver	See Appendix	See Appendix
Diver Tender	See Appendix	See Appendix
Dredger	See Appendix	See Appendix
Drywall, Lather, Acoustical Carpenter & Ceiling Installer	$37.41	$16.91
Drywall Taper	$34.13	$14.58
Electrician	See Appendix	See Appendix
Elevator Constructor, Installer and Mechanic	See Appendix	See Appendix
Fence Constructors (Non-metal)	$28.24	$11.01
Fence Erector (Metal)	$22.10	$4.13
Flagger (See Laborer Group 3)	See Appendix	See Appendix
Glazier	See Appendix	See Appendix
Hazardous Materials Handler/Mechanic	$21.83	$9.48
Highway and Parking Striper	$26.11	$8.20
Ironworker	See Appendix	See Appendix
Laborer Group 1	See Appendix	See Appendix
Laborer Group 2	See Appendix	See Appendix
Laborer Group 3	See Appendix	See Appendix
Landscape Laborer/Technician	$19.92	$4.96
Limited Energy Electrician	$31.64	$10.26
Line Constructor	See Appendix	See Appendix
Marble Setter	See Appendix	See Appendix
Millwright (See Carpenter Group 3)	See Appendix	See Appendix
Painter	$24.06	$8.78
Piledriver (See Carpenter Group 6)	See Appendix	See Appendix
Plasterer and Stucco Mason	$30.51	$17.22
Plumber/Pipefitter/Steamfitter	$47.40	$27.17
Power Equipment Operator Group 1	See Appendix	See Appendix
Power Equipment Operator Group 1A	See Appendix	See Appendix
Power Equipment Operator Group 1B	See Appendix	See Appendix
Power Equipment Operator Group 2	See Appendix	See Appendix
Power Equipment Operator Group 3	See Appendix	See Appendix
Power Equipment Operator Group 4	See Appendix	See Appendix
Power Equipment Operator Group 5	See Appendix	See Appendix
Power Equipment Operator Group 6	See Appendix	See Appendix

Using the booklet, Definitions of Covered Occupations, find the definition that most closely matches the actual work being performed by the worker.

OCCUPATION	BASIC HOURLY RATE	FRINGE RATE
Roofer	$29.11	$11.91
Sheet Metal Worker	$37.92	$16.17
Soft Floor Layer	See Appendix	See Appendix
Sprinkler Fitter	See Appendix	See Appendix
Tender to Mason Trades (Brick and Stonemason, Mortar Mixer, Hod Carrier)	$31.54	$11.80
Tender to Plasterer and Stucco Mason	$26.12	$12.29
Testing, Adjusting, and Balancing (TAB) Technician	$37.29	$14.60
Tilesetter/Terrazzo Worker: Hard Tilesetter	See Appendix	See Appendix
Tile, Terrazzo, and Marble Finisher	See Appendix	See Appendix
Truck Driver – All Groups	$24.64	$5.91

Using the booklet, Definitions of Covered Occupations, find the definition that most closely matches the actual work being performed by the worker.

OCCUPATION	BASIC HOURLY RATE	FRINGE RATE
Asbestos Worker/Insulator	See Appendix	See Appendix
Boilermaker	See Appendix	See Appendix
Bricklayer/Stonemason	See Appendix	See Appendix
Bridge and Highway Carpenter (See Carpenter Group 5)	See Appendix	See Appendix
Carpenter Group 1 & 2	See Appendix	See Appendix
Cement Mason	See Appendix	See Appendix
Diver	See Appendix	See Appendix
Diver Tender	See Appendix	See Appendix
Dredger	See Appendix	See Appendix
Drywall, Lather, Acoustical Carpenter & Ceiling Installer	See Appendix	See Appendix
Drywall Taper (See Painter & Drywall Taper)	See Appendix	See Appendix
Electrician	See Appendix	See Appendix
Elevator Constructor, Installer and Mechanic	$50.16	$38.26
Fence Constructor (Non-metal)	$28.24	$11.01
Fence Erector (Metal)	$22.10	$4.13
Flagger (See Laborer Group 3)	See Appendix	See Appendix
Glazier	$38.53	$20.11
Hazardous Materials Handler/Mechanic	$21.83	$9.48
Highway and Parking Striper	See Appendix	See Appendix
Ironworker	See Appendix	See Appendix
Laborer Group 1	See Appendix	See Appendix
Laborer Group 2	See Appendix	See Appendix
Laborer Group 3	See Appendix	See Appendix
Landscape Laborer/Technician	$19.92	$4.96
Limited Energy Electrician	$31.64	$10.26
Line Constructor	See Appendix	See Appendix
Marble Setter	See Appendix	See Appendix
Millwright (See Carpenter Group 3)	See Appendix	See Appendix
Painter	See Appendix	See Appendix
Piledriver (See Carpenter Group 6)	See Appendix	See Appendix
Plasterer and Stucco Mason	$30.51	$17.22
Plumber/Pipefitter/Steamfitter	See Appendix	See Appendix
Power Equipment Operator Group 1	See Appendix	See Appendix
Power Equipment Operator Group 1A	See Appendix	See Appendix
Power Equipment Operator Group 1B	See Appendix	See Appendix
Power Equipment Operator Group 2	See Appendix	See Appendix
Power Equipment Operator Group 3	See Appendix	See Appendix
Power Equipment Operator Group 4	See Appendix	See Appendix
Power Equipment Operator Group 5	See Appendix	See Appendix
Power Equipment Operator Group 6	See Appendix	See Appendix

Using the booklet, Definitions of Covered Occupations, find the definition that most closely matches the actual work being performed by the worker.

OCCUPATION	BASIC HOURLY RATE	FRINGE RATE
Roofer	$29.11	$11.91
Sheet Metal Worker	See Appendix	See Appendix
Soft Floor Layer	$27.28	$11.29
Sprinkler Fitter	See Appendix	See Appendix
Tender to Mason Trades (Brick and Stonemason, Mortar Mixer, Hod Carrier)	See Appendix	See Appendix
Tender to Plasterer and Stucco Mason	$26.12	$12.29
Testing, Adjusting, and Balancing (TAB) Technician	See Appendix	See Appendix
Tilesetter/Terrazzo Worker: Hard Tilesetter	$31.85	$19.33
Tile, Terrazzo, and Marble Finisher	See Appendix	See Appendix
Truck Driver – All Groups	$24.64	$5.91

Using the booklet, Definitions of Covered Occupations, find the definition that most closely matches the actual work being performed by the worker.

OCCUPATION	BASIC HOURLY RATE	FRINGE RATE
Asbestos Worker/Insulator	See Appendix	See Appendix
Boilermaker	$38.43	$23.09
Bricklayer/Stonemason	See Appendix	See Appendix
Bridge and Highway Carpenter	$38.22	$15.60
Carpenter Group 1 & 2	$32.88	$13.06
Cement Mason	$30.21	$13.18
Diver	See Appendix	See Appendix
Diver Tender	See Appendix	See Appendix
Dredger	See Appendix	See Appendix
Drywall, Lather, Acoustical Carpenter & Ceiling Installer	$37.41	$16.91
Drywall Taper (See Painter & Drywall Taper)	See Appendix	See Appendix
Electrician	$45.69	$18.34
Elevator Constructor, Installer and Mechanic	See Appendix	See Appendix
Fence Constructor (Non-metal)	$28.24	$11.01
Fence Erector (Metal)	$22.10	$4.13
Flagger (See Laborer Group 3)	See Appendix	See Appendix
Glazier	See Appendix	See Appendix
Hazardous Materials Handler/Mechanic	$21.83	$9.48
Highway and Parking Striper	$26.11	$8.20
Ironworker	$35.94	$23.35
Laborer Group 1	See Appendix	See Appendix
Laborer Group 2	See Appendix	See Appendix
Laborer Group 3	See Appendix	See Appendix
Landscape Laborer/Technician	$19.92	$4.96
Limited Energy Electrician	$31.64	$10.26
Line Constructor	$51.43	$20.25
Marble Setter	See Appendix	See Appendix
Millwright (See Carpenter Group 3)	See Appendix	See Appendix
Painter	$24.06	$8.78
Piledriver (See Carpenter Group 6)	See Appendix	See Appendix
Plasterer and Stucco Mason	$30.51	$17.22
Plumber/Pipefitter/Steamfitter	See Appendix	See Appendix
Power Equipment Operator Group 1	See Appendix	See Appendix
Power Equipment Operator Group 1A	See Appendix	See Appendix
Power Equipment Operator Group 1B	See Appendix	See Appendix
Power Equipment Operator Group 2	See Appendix	See Appendix
Power Equipment Operator Group 3	See Appendix	See Appendix
Power Equipment Operator Group 4	See Appendix	See Appendix
Power Equipment Operator Group 5	See Appendix	See Appendix
Power Equipment Operator Group 6	See Appendix	See Appendix

Using the booklet, Definitions of Covered Occupations, find the definition that most closely matches the actual work being performed by the worker.

OCCUPATION	BASIC HOURLY RATE	FRINGE RATE
Roofer	$29.11	$11.91
Sheet Metal Worker	See Appendix	See Appendix
Soft Floor Layer	$27.28	$11.29
Sprinkler Fitter	$39.57	$20.00
Tender to Mason Trades (Brick and Stonemason, Mortar Mixer, Hod Carrier)	$31.54	$11.80
Tender to Plasterer and Stucco Mason	$26.12	$12.29
Testing, Adjusting, and Balancing (TAB) Technician	$37.29	$14.60
Tilesetter/Terrazzo Worker: Hard Tilesetter	$31.85	$19.33
Tile, Terrazzo, and Marble Finisher	See Appendix	See Appendix
Truck Driver – All Groups	$24.64	$5.91

Using the booklet, Definitions of Covered Occupations, find the definition that most closely matches the actual work being performed by the worker.

OCCUPATION	BASIC HOURLY RATE	FRINGE RATE
Asbestos Worker/Insulator	See Appendix	See Appendix
Boilermaker	See Appendix	See Appendix
Bricklayer/Stonemason	$37.63	$18.43
Bridge and Highway Carpenter	$38.22	$15.60
Carpenter Group 1 & 2	$32.88	$13.06
Cement Mason	$30.21	$13.18
Diver	See Appendix	See Appendix
Diver Tender	See Appendix	See Appendix
Dredger	See Appendix	See Appendix
Drywall, Lather, Acoustical Carpenter & Ceiling Installer	$37.41	$16.91
Drywall Taper	$34.13	$14.58
Electrician	$45.69	$18.34
Elevator Constructor, Installer and Mechanic	See Appendix	See Appendix
Fence Constructor (Non-metal)	$28.24	$11.01
Fence Erector (Metal)	$22.10	$4.13
Flagger (See Laborer Group 3)	See Appendix	See Appendix
Glazier	$38.53	$20.11
Hazardous Materials Handler/Mechanic	$21.83	$9.48
Highway and Parking Striper	See Appendix	See Appendix
Ironworker	See Appendix	See Appendix
Laborer Group 1	See Appendix	See Appendix
Laborer Group 2	See Appendix	See Appendix
Laborer Group 3	See Appendix	See Appendix
Landscape Laborer/Technician	$19.92	$4.96
Limited Energy Electrician	$31.64	$10.26
Line Constructor	See Appendix	See Appendix
Marble Setter	See Appendix	See Appendix
Millwright	$31.56	$11.74
Painter	$24.06	$8.78
Piledriver	$41.20	$16.90
Plasterer and Stucco Mason	$30.51	$17.22
Plumber/Pipefitter/Steamfitter	See Appendix	See Appendix
Power Equipment Operator Group 1	See Appendix	See Appendix
Power Equipment Operator Group 1A	See Appendix	See Appendix
Power Equipment Operator Group 1B	See Appendix	See Appendix
Power Equipment Operator Group 2	See Appendix	See Appendix
Power Equipment Operator Group 3	See Appendix	See Appendix
Power Equipment Operator Group 4	See Appendix	See Appendix
Power Equipment Operator Group 5	See Appendix	See Appendix
Power Equipment Operator Group 6	See Appendix	See Appendix

Using the booklet, Definitions of Covered Occupations, find the definition that most closely matches the actual work being performed by the worker.

OCCUPATION	BASIC HOURLY RATE	FRINGE RATE
Roofer	$29.11	$11.91
Sheet Metal Worker	See Appendix	See Appendix
Soft Floor Layer	$27.28	$11.29
Sprinkler Fitter	See Appendix	See Appendix
Tender to Mason Trades (Brick and Stonemason, Mortar Mixer, Hod Carrier)	$31.54	$11.80
Tender to Plasterer and Stucco Mason	$26.12	$12.29
Testing, Adjusting, and Balancing (TAB) Technician	$37.29	$14.60
Tilesetter/Terrazzo Worker: Hard Tilesetter	$31.85	$19.33
Tile, Terrazzo, and Marble Finisher	See Appendix	See Appendix
Truck Driver – All Groups	$24.64	$5.91

APPENDIX

JANUARY 1, 2021

Collectively Bargained Rates

(To be used only when referred to in the Regions pages 6-33)

JANUARY 1, 2021 APPENDIX

The Appendix rates are Collectively Bargained Rates to be used ONLY for Regions/Trades specified in pages 6 through 33. Refer to pages 6 through 33 BEFORE using rates in this section.
Rates in this section may include premium pay such as shift differential, hazard pay and/or a zone pay differential, which is added to the hourly base rate.

Using the booklet, Definitions of Covered Occupations, find the definition and group number, if applicable, that most closely matches the actual work being performed by the worker.

TRADE	HOURLY BASE RATE	HOURLY FRINGE RATE
ASBESTOS WORKER/INSULATOR		
	52.77	**22.67**
Firestop Containment	**37.73**	**15.84**
BOILERMAKER	**38.51**	**30.29**
BRICKLAYER/STONEMASON		
	41.20	**21.12**

(This trade is tended by "Tenders to Mason Trades")

(Add $1.00 per hour to Fringe for Refractory repair work)

CARPENTER

Zone A (Base Rate)

Group 1	**41.75**	**18.30**
Group 2	**41.91**	**18.30**
Group 3	**43.26**	**18.30**
Group 4	**Eliminated**	
Group 5	**42.31**	**18.30**
Group 6	**42.87**	**18.30**

Zone Differential for Carpenters
(Add to Zone A Base Rate)

Zone B	**1.25** per hour
Zone C	**1.70** per hour
Zone D	**2.00** per hour
Zone E	**3.00** per hour
Zone F	**5.00** per hour
Zone G	**10.00** per hour

Zone A: Projects located within 30 miles of the respective city hall of the cities listed.
Zone B: More than 30 miles but less than 40 miles.
Zone C: More than 40 miles but less than 50 miles.
Zone D: More than 50 miles but less than 60 miles.
Zone E: More than 60 miles but less than 70 miles.
Zone F: More than 70 miles but less than 100 miles.
Zone G: More than 100 miles.

CARPENTER (continued)

Reference Cities for Group 1 and 2 Carpenters

Albany	Goldendale	Madras	Roseburg
Astoria	Grants Pass	Medford	Salem
Baker City	Hermiston	Newport	The Dalles
Bend	Hood River	Ontario	Tillamook
Brookings	Klamath Falls	Pendleton	Vancouver
Burns	La Grande	Portland	
Coos Bay	Lakeview	Port Orford	
Eugene	Longview	Reedsport	

Group 3
(Millwright)

Zones for Group 3 Carpenter are determined by the distance between the project site and **either**

1) The worker's residence; ***or***

2) City Hall of a reference city listed for the appropriate group shown, whichever is closer

Reference Cities for Group 3 Carpenters

Eugene	Medford	Portland	Vancouver
Longview	North Bend	The Dalles	

Group 5
(Bridge & Highway Carpenter)

Group 6
(Piledriver)

Zones for Groups 5 and 6 Carpenter are determined by the distance between the project site and **either**

1) The worker's residence; ***or***

2) City Hall of a reference city listed for the appropriate group shown, whichever is closer

Reference Cities for Group 5 and 6 Carpenters

Bend	Longview	North Bend
Eugene	Medford	Portland

Note: All job or project locations shall be computed (determined) on the basis of road miles and in the following manner. A mileage measurement will start at the entrance to the respective city hall, facing the project (if possible), and shall proceed by the normal route (shortest time, best road) to the geographical center on the highway, railroad, and street construction projects (end of measurement). On all project contracts, the geographical center where the major portion of the construction is located, shall be considered the center of the project (end measurement).

TRADE	HOURLY BASE RATE	HOURLY FRINGE RATE

CARPENTER (continued)

Welders shall receive a 5% premium per hour over their group's journeyman wage rate, with an eight (8) hour minimum.

When working with creosote and other toxic, treated wood and steel material, workers shall receive $.25/hour premium pay for minimum of eight (8) hours.

When working in sheet pile coffer dams or cells up to the external water level, Group 6 workers shall receive $.15/hour premium pay for minimum of eight (8) hours.

CEMENT MASON

(This trade is tended by "Concrete Laborer")

Base Rate

Group 1	**35.52**	**21.42**
Group 2	**36.29**	**21.42**
Group 3	**36.29**	**21.42**
Group 4	**37.05**	**21.42**

Zone Differential for Cement Mason
(Add to Basic Hourly Rate)

Zone A	**3.00** per hour
Zone B	**5.00** per hour
Zone C	**10.00** per hour

Zone A: Projects located 60-79 miles of the respective city hall of the Reference Cities listed below.
Zone B: Projects located 80-99 miles of the respective city hall of the Reference Cities listed below.
Zone C: Projects located 100 or more miles of the respective city hall of the Reference Cities listed below.

Reference Cities for Zones A-C (Cement Mason)

Bend	Medford	Salem
Corvallis	Pendleton	The Dalles
Eugene	Portland	Vancouver

When a contractor takes current employees to a project that is located more than 59 miles from the city hall of the Reference City that is closest to the contractor's place of business, Zone Pay is to be paid for the distance between the city hall of the identified Reference City and the project site.

CEMENT MASON (continued)

"Contractor's place of business" shall include not only contractor's principal place of business but also contractor's area office(s) that support contractor's operations in a geographical region. Such area office(s) shall not include project offices(s) established for the duration of a particular project.

Note: All miles are to be determined on the basis of road miles using the normal route (shortest time – best road), from the city hall of the Reference City closest to the contractor's place of business and the project.

DIVER & DIVER TENDER

Zone 1 (Base Rate)

DIVER	**91.14**	**18.30**
DIVER TENDER	**47.14**	**18.30**

1) For those workers who reside within a reference city below, their zone pay shall be computed from the city hall of the city wherein they reside.

2) For those workers who reside nearer to a project than is the city hall of any reference city below, the mileage from their residence may be used in computing their zone pay differential.

3) The zone pay for all other projects shall be computed from the city hall of the nearest reference city listed below.

Zone Differential for Diver/Diver Tender
(Add to Zone 1 Base Rate)

Zone 2	**1.25** per hour
Zone 3	**1.70** per hour
Zone 4	**2.00** per hour
Zone 5	**3.00** per hour
Zone 6	**5.00** per hour
Zone 7	**10.00** per hour

Zone 1: Projects located within 30 miles of city hall of the reference cities listed.
Zone 2: More than 30 miles, but less than 40 miles.
Zone 3: More than 40 miles, but less than 50 miles.
Zone 4: More than 50 miles, but less than 60 miles.
Zone 5: More than 60 miles, but less than 70 miles.
Zone 6: More than 70 miles, but less than 100 miles.
Zone 7: More than 100 miles from the city hall of employee's home local.

See References Cities on Page 40

TRADE	HOURLY BASE RATE	HOURLY FRINGE RATE

DIVER & DIVER TENDER (continued)

Reference Cities for Diver/Diver Tender

Bend	Medford
Eugene	North Bend
Longview	Portland

Note: All job or project locations shall be computed (determined) on the basis of road miles and in the following manner. A mileage measurement will start at the entrance to the respective city hall, facing the project (if possible), and shall proceed by the normal route (shortest time, best road) to the geographical center on the highway, railroad, and street construction projects (end of measurement). On all project contracts, the geographical center where the major portion of the construction is located, shall be considered the center of the project (end measurement).

Diver Depth Pay:

Depth of Dive	Daily Depth Pay
50-100 ft.	$2.00 per foot over 50 feet
101-150 ft.	$3.00 per foot over 100 feet
151-220 ft.	$4.00 per foot over 150 feet
Over 220 ft.	$5.00 per foot over 220 ft.

Depth shall be figured from the surface to the actual depth where the diving work is being performed.

Diver Enclosure Pay (working without vertical escape):

Distance Traveled In the Enclosure	Daily Enclosure Pay
0 - 25ft.	N/C
25 - 300 ft.	$1.00 per foot from the entrance
300 - 600 ft.	$1.50 per foot beginning at 300 ft.
Over 600 ft.	$2.00 per foot beginning at 600 ft.

DREDGER

Zone A (Base Rate)

TRADE	HOURLY BASE RATE	HOURLY FRINGE RATE
Leverman (Hydraulic & Clamshell)	**50.96**	**15.65**
Assistant Engineer (Watch Engineer, Mechanic Machinist)	**47.80**	**15.65**
Tenderman (Boatman Attending Dredge Plant) Fireman	**46.31**	**15.65**
Fill Equipment Operator	**45.14**	**15.65**
Assistant Mate	**42.44**	**15.65**

Zone Differential for Dredgers
(Add to Zone A Base Rate)

Zone B	**3.00** per hour
Zone C	**6.00** per hour

Zone mileage based on road miles:

Zone A: Center of jobsite to no more than 30 miles from the city hall of Portland.
Zone B: More than 30 miles but not more than 60 miles.
Zone C: Over 60 miles.

DRYWALL, LATHER, ACOUSTICAL CARPENTER & CEILING INSTALLER

Zone 1 (Base Rate)

TRADE	HOURLY BASE RATE	HOURLY FRINGE RATE
1. DRYWALL INSTALLER	**42.04**	**18.01**
2. LATHER, ACOUSTICAL CARPENTER & CEILING INSTALLER	**42.04**	**18.01**

See Zone Differential on page 41

TRADE	HOURLY BASE RATE	HOURLY FRINGE RATE	TRADE	HOURLY BASE RATE	HOURLY FRINGE RATE

DRYWALL, LATHER, ACOUSTICAL CARPENTER & CEILING INSTALLER (continued)

Zone Differential for Drywall, Lather, Acoustical Carpenter & Ceiling Installer
(Add to Zone 1 Base Rate)

Zone mileage based on road miles:

Zone B	61-80 miles	**6.00** per hour
Zone C	81-100 miles	**9.00** per hour
Zone D	101 or more	**12.00** per hour

The correct transportation allowance shall be based on AAA road mileage from the City Hall of the transportation reference cities herein listed.

Reference Cities for Drywall, Lather, Acoustical Carpenter & Ceiling Installer

Albany	Coquille	Medford	Roseburg
Astoria	Eugene	Newport	Salem
Baker	Grants Pass	North Bend	Seaside
Bandon	Hermiston	Pendleton	The Dalles
Bend	Klamath Falls	Portland	Tillamook
Brookings	Kelso-Longview	Reedsport	Vancouver

ELECTRICIAN

Area 1

Electrician	**32.71**	**15.92**
Cable Splicer	**35.98**	**16.12**

Reference Counties Area 1

Malheur

Area 2

Electrician	**48.05**	**22.12**
Cable Splicer	**50.45**	**22.19**

Reference Counties Area 2

Baker	Grant	Umatilla	Wallowa
Gilliam	Morrow	Union	Wheeler

Add 50% of the base rate when workers are required to work under the following conditions:

ELECTRICIAN (continued)

1) Under compressed air with atmospheric pressure exceeding normal pressure by at least 10%.

2) From trusses, swing scaffolds, bosun's chairs, open platforms, unguarded scaffolds, open ladders, frames, tanks, stacks, silos and towers where the workman is subject to a direct fall of (a) more than 60 feet or (b) into turbulent water under bridges, powerhouses or spillway faces of dams.

Area 3

Electrician	**41.63**	**21.20**

Reference Counties Area 3

Coos	Douglas (a)	Lincoln
Curry	Lane (a)	

(a) Those portions of Lane and Douglas lying **west** of a line running North and South from the NE corner of Coos County to the SE corner of Lincoln County.

Shift Differential

1st Shift "day"	Between the hours of 8:00am and 4:30pm	8 hours pay for 8 hours work
2nd Shift "swing"	Between the hours of 4:30pm and 1:00am	8 hours pay for 8 hours work plus 17% for all hours worked
3rd Shift "graveyard"	Between the hours of 12:30am and 9:00am	8 hours pay for 8 hours work plus 31% for all hours worked.

When workers are required to work under compressed air or where gas masks are required, or to work from trusses, all scaffolds including mobile elevated platforms, any temporary structure, bosun's chair or on frames, stacks, towers, tanks, within 15' of the leading edges of any building at a distance of:

50 – 75 feet to the ground	Add 1 ½ x the base rate
75+ feet to the ground	Add 2 x the base rate

TRADE	HOURLY BASE RATE	HOURLY FRINGE RATE

ELECTRICIAN (continued)

High Time is not required to be paid on any permanent structure with permanent adequate safeguards (handrails, mid-rails, and toe guards). Any vehicle equipped with outriggers are exempted from this section.

Area 4

Electrician	**46.19**	**20.11**
Cable Splicer	**50.81**	**20.24**
Lighting Maintenance/ Material Handlers	**21.53**	**10.10**

Reference Counties Area 4

Benton	Jefferson	Marion
Crook	Lane (b)	Polk
Deschutes	Linn	Yamhill (c)

(b) That portion of Lane County lying **east** of a line running North and South from the NE corner of Coos County to the SE corner of Lincoln County.

(c) South half

Shift Differential

1st Shift "day"	Between the hours of 8:00am and 4:30pm	8 hours pay for 8 hours work
2nd Shift "swing"	Between the hours of 4:30pm and 1:00am	8 hours pay for 8 hours work plus 17% for all hours worked
3rd Shift "graveyard"	Between the hours of 12:30am and 9:00am	8 hours pay for 8 hours work plus 31.4% for all hours worked.

Area 5

Electrician	**50.35**	**26.78**
Electrical Welder	**55.39**	**26.93**
Material Handler/ Lighting Maintenance	**28.70**	**17.59**

Reference Counties Area 5

Clackamas	Hood River	Tillamook	Yamhill (d)
Clatsop	Multnomah	Wasco	
Columbia	Sherman	Washington	

(d) North Half

ELECTRICIAN (continued)

Shift Differential

1st Shift "day"	Between the hours of 8:00am and 4:30pm	8 hours pay for 8 hours work
2nd Shift "swing"	Between the hours of 4:30pm and 1:00am	8 hours pay for 8 hours work plus 17.3% for all hours worked
3rd Shift "graveyard"	Between the hours of 12:30am and 9:00am	8 hours pay for 8 hours work plus 31.4% for all hours worked.

Zone Pay for Area 5 **Electrician and Electrical Welder**
(Add to Basic Hourly Rate)

Zone mileage based on air miles:

Zone 1	31-50 miles	**1.50** per hour
Zone 2	51-70 miles	**3.50** per hour
Zone 3	71-90 miles	**5.50** per hour
Zone 4	Beyond 90	**9.00** per hour

There shall be a 30-mile free zone from downtown Portland City Hall and a similar 15-mile free zone around the following cities:

Astoria	Seaside	Tillamook
Hood River	The Dalles	

Further, the free zone at the Oregon coast shall extend along Hwy 101 west to the ocean Hwy 101 east 10 miles if not already covered by the above 15-mile free zone.

Area 6

Electrician	**38.49**	**17.74**
Lighting Maintenance and Material Handlers	**18.29**	**10.00**

Reference Counties Area 6

Douglas (e)	Jackson	Klamath
Harney	Josephine	Lake

(e) That portion of Douglas County lying **east** of a line running North and South from the NE corner of Coos County to the SE corner of Lincoln County.

See Shift Differential on page 43

TRADE	HOURLY BASE RATE	HOURLY FRINGE RATE

ELECTRICIAN (continued)

Shift Differential

1st Shift "day"	Between the hours of 8:00am and 4:30pm	8 hours pay for 8 hours work
2nd Shift "swing"	Between the hours of 4:30pm and 1:00am	8 hours pay for 8 hours work plus 7.5% for all hours worked
3rd Shift "graveyard"	Between the hours of 12:30am and 9:00am	8 hours pay for 8 hours work plus 15% for all hours worked.

When workers are required to work under compressed air or to work from trusses, scaffolds, swinging scaffolds, bosun's chair or on building frames, stacks or towers at a distance, the following should be added to base rate.

50 – 90 feet to the ground	Add 1 ½ x the base rate
90+ feet to the ground	Add 2 x the base rate

ELEVATOR CONSTRUCTOR, INSTALLER AND MECHANIC

Area 1

Mechanic	**55.86**	**40.97**

Reference Counties Area 1

Baker Umatilla Union Wallowa

Area 2

Mechanic	**57.98**	**42.27**

Reference Counties Area 2

All remaining Counties

GLAZIER	**42.10**	**23.62**

(Add $1.00 to base rate when employee works from a swing stage, scaffold, suspended contrivance or mechanical apparatus from the third floor up or thirty feet of free fall (whichever is less), and employee is required to wear a safety belt.)

(Add $4.00 to base rate when employee works from a bosun chair (non-motorized single-man apparatus), regardless of height.)

HAZARDOUS MATERIALS HANDLER

	26.03	**12.68**

HIGHWAY/PARKING STRIPER

	35.87	**13.50**

Shift Differential

Add $1.85 to base rate for shifts that start between 3:00pm and 4:00am.

IRONWORKER

Zone 1 (Base Rate):	**39.10**	**27.50**

Zone Differential for Ironworker
(Add to Basic Hourly Rate)

Zone 2	**5.63/**hr. or $45.00 maximum per day
Zone 3	**8.75**/hr. or $70.00 maximum per day
Zone 4	**11.25/**hr. or $90.00 maximum per day

Zone 1: Projects located within 45 miles of city hall in the reference cities listed below.
Zone 2: More than 46 miles, but less than 60 miles.
Zone 3: More than 61 miles, but less than 100 miles.
Zone 4: More than 100 miles.

Note: Zone pay for Ironworkers shall be determined using the quickest route per Google Maps and computed from the city hall or dispatch center of the reference cities listed below **or** the residence of the employee, whichever is nearer to the project.

Reference Cities and Dispatch Center

Medford Portland

LABORER

Zone A (Base Rate):

Group 1	**31.83**	**15.40**
Group 2	**33.01**	**15.40**
Group 3	**27.56**	**15.40**

Note: A Hazardous Waste Removal Differential must be added to the base rate if work is performed inside the boundary of a Federally Designated Hazardous Waste Site. A Group 1 base rate is used for General Laborer on such a site. For further information on this, call the Prevailing Wage Rate Coordinator at (971) 673-0839.

See Zone Differential on page 44

TRADE	HOURLY BASE RATE	HOURLY FRINGE RATE

LABORER (continued)

Zone Differential for Laborers
(Add to Zone A Base Rate)

Zone B	**.85** per hour
Zone C	**1.25** per hour
Zone D	**2.00** per hour
Zone E	**3.00** per hour
Zone F	**5.00** per hour

Zone A: Projects located within 30 miles of city hall in the reference cities listed.
Zone B: More than 30 miles but less than 40 miles.
Zone C: More than 40 miles but less than 50 miles.
Zone D: More than 50 miles but less than 80 miles.
Zone E: More than 80 miles but less than 100 miles.
Zone F: More than 100 miles.

Reference Cities for Laborer

Albany	Burns	Hermiston	Roseburg
Astoria	Coos Bay	Klamath Falls	Salem
Baker City	Eugene	Medford	The Dalles
Bend	Grants Pass	Portland	

Note: All job or project locations shall be computed (determined) on the basis of road miles and in the following manner. A mileage measurement will start at the entrance to the respective city hall, facing the project (if possible), and shall proceed by the normal route (shortest time, best road) to the geographical center on the highway, railroad, and street construction projects (end of measurement). On all other project contracts, the geographical center where the major portion of the construction is located, shall be considered the center of the project (end measurement).

LIMITED ENERGY ELECTRICIAN

Area 1	**21.00**	**11.41**

Reference Counties Area 1

Malheur

Area 2	**31.45**	**14.50**

Reference Counties Area 2

Baker	Grant	Umatilla	Wallowa
Gilliam	Morrow	Union	Wheeler

LIMITED ENERGY ELECTRICIAN (continued)

Area 3	**32.16**	**18.24**

Reference Counties Area 3

Coos	Douglas (a)	Lincoln
Curry	Lane (a)	

(a) Those portions of Lane and Douglas lying **west** of a line running North and South from the NE corner of Coos County to the SE corner of Lincoln County.

Area 4	**34.93**	**16.00**

Reference Counties Area 4

Benton	Jefferson	Marion
Crook	Lane (b)	Polk
Deschutes	Linn	Yamhill (c)

(b) That portion of Lane County lying **east** of a line running North and South from the NE corner of Coos County to the SE corner of Lincoln County.

(c) South half

Area 5	**41.55**	**21.95**

Reference Counties Area 5

Clackamas	Hood River	Tillamook	Yamhill (d)
Clatsop	Multnomah	Wasco	
Columbia	Sherman	Washington	

(d) North Half

Area 6	**31.06**	**14.23**

Reference Counties Area 6

Douglas (e)	Jackson	Klamath
Harney	Josephine	Lake

(e) That portion of Douglas County lying **east** of a line running North and South from the NE corner of Coos County to the SE corner of Lincoln County.

TRADE	HOURLY BASE RATE	HOURLY FRINGE RATE

LINE CONSTRUCTOR

Area 1

Group 1	**60.28**	**22.11**
Group 2	**53.82**	**21.82**
Group 3	**30.65**	**13.72**
Group 4	**46.29**	**18.28**
Group 5	**40.37**	**16.12**
Group 6	**33.37**	**15.80**
Group 7	**18.68**	**11.22**

Reference Counties Area 1

All counties except Malheur County

Area 2

Cable Splicer	**54.57**	**17.87**
Journeyman Lineman	**49.41**	**17.36**
Line Equip. Operator	**41.09**	**16.45**
Groundman	**29.17**	**14.05**

Reference County Area 2

Malheur County

MARBLE SETTER **42.20** **21.12**

(This trade is tended by "Tile, Terrazzo, & Marble Finishers")

PAINTER & DRYWALL TAPER

COMMERCIAL PAINTING	**26.56**	**13.51**
INDUSTRIAL PAINTING	**28.36**	**13.51**
BRIDGE PAINTING	**34.23**	**13.51**

(Add $0.75 to base rate for work over 60 ft. high on swing stage, mechanical climber, spider or bucket truck for all wage classifications)

DRYWALL TAPER

Zone A (Base Rate)

40.42 **17.63**

PAINTER & DRYWALL TAPER (continued)

Zone Differential for Drywall Taper
(Add to Zone A Base Rate)

Zone B	**6.00** per hour
Zone C	**9.00** per hour
Zone D	**12.00** per hour

Dispatch Cities for Drywall Taper

Albany	Coquille	Medford	Roseburg
Astoria	Eugene	Newport	Salem
Baker	Grants Pass	North Bend	Seaside
Bandon	Hermiston	Pendleton	The Dalles
Bend	Klamath Falls	Portland	Tillamook
Brookings	Kelso-Longview	Reedsport	Vancouver

Zone A: Projects located less than 61 miles of the respective city hall of the dispatch cities listed.
Zone B: Projects located 61 miles to 80 miles.
Zone C: Projects located 81 miles to 100 miles.
Zone D: Projects located 101 miles or more.

Note: Zone pay is based on AAA Road Mileage.

PLASTERER AND STUCCO MASON

(This trade is tended by "Tenders to Plasterers")

Zone A (Base Rate)

Plasterer	**38.09**	**18.83**
Swinging Scaffold	**39.09**	**18.83**
Nozzleman	**40.09**	**18.83**

Zone Differential for Plasterer and Stucco Mason
(Add to Zone A Base Rate)

Zone B	**6.00** per hour
Zone C	**9.00** per hour
Zone D	**12.00** per hour

See Zone Differential mileage on page 46

TRADE	HOURLY BASE RATE	HOURLY FRINGE RATE

PLASTERER AND STUCCO MASON (continued)

Zone A: Projects located less than 61 miles of the respective city hall of the reference cities listed below.
Zone B: Projects located 61 miles to 80 miles.
Zone C: Projects located 81 miles to 100 miles.
Zone D: Projects located 101 miles or more.

Reference Cities for Plasterer & Stucco Mason

Bend	Medford	Seaside
Coos Bay	Newport	The Dalles
Eugene	Portland	
La Grande	Salem	

PLUMBER/PIPEFITTER/STEAMFITTER

Area 1	**32.00**	**15.57**

Reference Counties Area 1

Baker	Harney (a)	Malheur

(a) Except that portion which lies North and West of a North-South line drawn from the town of John Day to a point five miles east of the town of Burns and three miles South of Burns thence on an airline through the town of Wagontire West to the county line.

(Add $2.21 to base rate if it is possible for worker to fall 30 ft. or more, or if required to wear a fresh-air mask or similar equipment for 2 hours or more)

Zone Differential for Area 1
Plumbers/Pipefitters/Steamfitters
(Add to Base Rate)

Zone 1	**2.50** per hour
Zone 2	**3.50** per hour
Zone 3	**5.00** per hour

Zone mileage based on road miles:
Zone 1: Forty (40) to fifty five (55) miles from City Hall in Boise, Idaho.
Zone 2: Fifty five (55) to one hundred (100) miles from City Hall in Boise, Idaho.
Zone 3: Over one hundred (100) miles from City Hall in Boise, Idaho.

There shall be a maximum of ten (10) hours of zone pay per workday.

PLUMBER/PIPEFITTER/STEAMFITTER (continued)

Area 2	**52.20**	**32.50**

Reference Counties Area 2

Grant	Umatilla	Wallowa
Morrow	Union	

Zone Differential for Area 2
(Add to Base Rate)

Zone 2 **10.62**/hr. not to exceed $80.00 day.

Zone mileage based on road miles:

Zone 2: Eighty (80) miles or more from City Hall in Pasco, Washington.

(Add $1.00 to base rate if it is possible for worker to fall 35 ft. or more, or if required to wear a fresh-air mask or similar equipment for 1 hour minimum increments)

Area 3	**47.43**	**32.73**

Reference Counties Area 3

Benton	Deschutes	Klamath	Polk
Clackamas	Douglas	Lake	Sherman
Clatsop	Gilliam	Lane	Tillamook
Columbia	Hood River	Lincoln	Wasco
Coos	Jackson	Linn	Washington
Crook	Jefferson	Marion	Wheeler
Curry	Josephine	Multnomah	Yamhill

POWER EQUIPMENT OPERATOR

Zone 1 (Base Rate)

Group 1	**48.90**	**15.85**
Group 1A	**51.06**	**15.85**
Group 1B	**53.22**	**15.85**
Group 2	**46.99**	**15.85**
Group 3	**45.84**	**15.85**
Group 4	**43.26**	**15.85**
Group 5	**42.02**	**15.85**
Group 6	**38.80**	**15.85**

(Group 4 Tunnel Boring Machine Mechanic add $10.00/hour hyperbaric pay)

See Zone Differential on page 47

POWER EQUIPMENT OPERATOR (continued)

Note: A Hazardous Waste Removal Differential must be added to the base rate if work is performed inside the boundary of a Federally Designated Waste Site. For information on this differential, call the Prevailing Wage Rate Coordinator at (971) 673-0839.

(Add $0.40 to the base rate for any and all work performed underground, including operating, servicing and repairing of equipment)

(Add $0.50 to the base rate per hour for any employee who works suspended by a rope or cable)

(Add $0.50 to the base rate for employees who do "pioneer" work (break open a cut, build road, etc.) more than one hundred fifty (150) feet above grade elevation)

Shift Differential

Two-Shift Operations:

On a two shift operation, when the second shift starts after 4:30 p.m., second-shift workers shall be paid the base hourly wage rate plus 5% for all hours worked.

When the second shift starts at 8:00 p.m. or later, the second-shift workers shall be paid at the base hourly wage rate plus 10% for all hours worked.

Three-Shift Operations:

On a three-shift operation, the base hourly wage rate plus five percent (5%) shall be paid to all second-shift workers for all hours worked, and the base hourly wage rate plus ten percent (10%) shall be paid to all third shift workers for all hours worked.

Zone Pay Differential for Power Equipment Operator
(Add to Zone 1 Base Rate)

Zone 2	**3.00** per hour
Zone 3	**6.00** per hour

For projects in the following metropolitan counties:

Clackamas	Marion	Washington
Columbia	Multnomah	Yamhill

POWER EQUIPMENT OPERATOR (continued)

See map on page 51 for Zone 1 of this classification

(A) All jobs or projects located in Multnomah, Clackamas and Marion counties, West of the western boundary of Mt. Hood National Forest and West of Mile Post 30 on Interstate 84 and West of Mile Post 30 on State Hwy 26 and West of Mile Post 30 on Hwy 22 and all jobs located in Yamhill County, Washington County and Columbia County shall receive Zone 1 pay for all classifications.

(B) All jobs or projects located in the area outside the *identified boundary* above, but less than 50 miles from the Portland City Hall shall receive Zone 2 pay for all classifications.

(C) All jobs or projects located more than 50 miles from the Portland City Hall, but outside the identified border above, shall receive Zone 3 pay for all classifications.

Reference cities for projects in all remaining counties:

Albany	Coos Bay	Grants Pass	Medford
Bend	Eugene	Klamath Falls	Roseburg

(A) All jobs or projects located within 30 miles of the respective city hall of the above mentioned cities shall receive Zone 1 pay for all classifications.

(B) All jobs or projects located more than 30 miles and less than 50 miles from the respective city hall of the above mentioned cities shall receive Zone 2 for all classifications.

(C) All jobs or projects located more than 50 miles from the respective city hall of the above mentioned cities shall receive Zone 3 pay for all classifications.

Note: All job or project locations shall be computed (determined) on the basis of road miles and in the following manner. A mileage measurement will start at the entrance to the respective city hall, facing the project (if possible), and shall proceed by the normal route (shortest time-best road) to the geographical center on the highway, railroad, and street construction projects (end of measurement). On all other project contracts, the geographical center where the major portion of the construction is located, shall be considered the center of the project (end measurement).

TRADE	HOURLY BASE RATE	HOURLY FRINGE RATE

ROOFER

Area 1

Roofer	**36.23**	**19.77**
Handling coal tar pitch	**39.85**	**19.77**
Remove fiberglass insulation	**39.85**	**19.77**

Reference Counties Area 1

Baker	Gilliam	Multnomah	Washington
Clackamas	Grant	Sherman	Wheeler
Clatsop	Hood River	Tillamook	
Columbia	Jefferson	Wasco	

Area 2

Roofer	**30.87**	**16.04**
Handling coal tar pitch	**32.87**	**16.04**
Remove fiberglass insulation	**32.37**	**16.04**

Reference Counties Area 2

Benton	Douglas	Lake	Marion
Coos	Harney	Lane	Polk
Crook	Jackson	Lincoln	Yamhill
Curry	Josephine	Linn	
Deschutes	Klamath	Malheur	

Area 4

Roofers	**28.68**	**13.26**

Reference Counties Area 4

Umatilla Union Wallowa

(Add $2.25 to basic hourly rate for employees working with irritable bituminous materials)

(Add $2.00 to basic hourly rate for employees removing fiberglass insulation)

Area 5

Roofers	**28.85**	**13.06**

Reference County for Area 5

Morrow

(Add $3.25 to base rate for employees working with irritable and pitch bituminous materials)

SHEET METAL WORKER

Area 1 — 42.30 — 23.13

Reference Counties Area 1

Benton	Grant	Multnomah	Washington
Clackamas	Hood River	Polk	Wheeler
Clatsop	Lincoln	Sherman	Yamhill
Columbia	Linn	Tillamook	
Gilliam	Marion	Wasco	

(Add $1.00 to base rate for work performed on any swinging platform, swinging chair or swinging ladder)

(Add $1.00 to base rate for work where a worker is exposed to resins, chemicals or acid)

Area 2 — 28.00 — 19.54

Reference Counties Area 2

Baker Malheur

(Add $2.21 to base rate for work performed in an area where epoxy resins or other injurious chemicals are being applied)

Area 3 — 41.35 — 22.12

Reference Counties Area 3

Morrow Umatilla Union Wallowa

(Add $1.00 to base rate for work where it is necessary to wear a chemically activated type face mask)

Area 4 — 34.98 — 20.79

Reference Counties Area 4

Douglas Lane

(Add $1.00 to base rate for work performed on any swinging platform, swinging chair or swinging ladder)

(Add $1.00 to base rate for work where a worker is exposed to resins, chemicals or acid)

TRADE	HOURLY BASE RATE	HOURLY FRINGE RATE

SHEET METAL WORKER (continued)

Area 5 35.30 21.81

Reference Counties Area 5

Coos

(Add $1.00 to base rate for work performed on any swinging platform, swinging chair or swinging ladder)

(Add $1.00 to base rate for work where a worker is exposed to resins, chemicals or acid)

Area 6 29.74 19.70

Reference Counties Area 6

Curry	Jackson	Klamath
Harney	Josephine	Lake

(Add $1.00 to base rate for work performed on any swinging platform, swinging chair or swinging ladder)

(Add $1.00 to base rate for work where a worker is exposed to resins, chemicals or acid)

Area 7 32.66 19.44

Reference Counties Area 7

Crook	Deschutes	Jefferson

(Add $1.00 to base rate for work performed on any swinging platform, swinging chair or swinging ladder)

(Add $1.00 to base rate for work where a worker is exposed to resins, chemicals or acid)

SOFT FLOOR LAYER 31.86 19.14

SPRINKLER FITTER

Area 1 40.71 25.30

Reference Counties Area 1

Benton	Deschutes	Klamath	Polk
Clackamas	Douglas	Lake	Sherman
Clatsop	Harney	Lane	Tillamook
Columbia	Hood River	Lincoln	Wasco
Coos	Jackson	Linn	Washington
Crook	Jefferson	Marion	Wheeler
Curry	Josephine	Multnomah	Yamhill

SPRINKLER FITTER (continued)

Area 2 34.82 25.29

Reference Counties Area 2

Baker	Grant	Morrow	Union
Gilliam	Malheur	Umatilla	Wallowa

TENDER TO MASON TRADES (Brick and Stonemason, Mortar Mixer, Hod Carrier)

34.89 15.40

(Add $0.50 to base rate for Refractory work)

TENDER TO PLASTERER AND STUCCO MASON

Zone A (Base Rate)
34.62 15.40

Zone Differential for Tender to Plasterer and Stucco Mason
(Add to Zone A Base Rate)

Zone B	**.85** per hour
Zone C	**1.25** per hour
Zone D	**1.70** per hour
Zone E	**2.00** per hour
Zone F	**3.00** per hour
Zone G	**5.00** per hour

Zone A: Projects located within 30 miles of city hall in the reference cities listed.
Zone B: More than 30 miles but less than 40 miles.
Zone C: More than 40 miles but less than 50 miles.
Zone D: More than 50 miles but less than 60 miles.
Zone E: More than 60 miles but less than 70 miles.
Zone F: More than 70 miles but less than 100 miles.
Zone G: More than 100 miles.

Reference Cities

Astoria	Coos Bay	Medford	Roseburg
Bend	Eugene	Pendleton	Salem
Corvallis	Klamath Falls	Portland	The Dalles

(Add $0.50 to base rate for Refractory work)

TRADE	HOURLY BASE RATE	HOURLY FRINGE RATE

TESTING AND BALANCING (TAB) TECHNICIAN

Air-Handling Equipment, Ductwork

See SHEET METAL WORKER

Water Distribution Systems

See PLUMBER/PIPEFITTER/STEAMFITTER

TILESETTER/TERRAZZO WORKER: Hard Tilesetter

	35.35	**19.36**

(This trade is tended by "Tile, Terrazzo, & Marble Finisher")

(Add $1.00 to base rate if work involves epoxy, furnane, alkor or acetylene black grouting)

TILE, TERRAZZO, AND MARBLE FINISHER

1. TILE, TERRAZZO FINISHER

	26.94	**14.11**

(Add $1.00 to base rate if work involves epoxy, furnane, alkor or acetylene black grouting)

2. BRICK AND MARBLE FINISHER

	26.94	**14.24**

(Add $1.00 to base rate for Refractory work)

TRUCK DRIVER

Zone A (Base Rate)

Group 1	**29.33**	**16.35**
Group 2	**29.46**	**16.35**
Group 3	**29.60**	**16.35**
Group 4	**29.89**	**16.35**
Group 5	**30.13**	**16.35**
Group 6	**30.31**	**16.35**
Group 7	**30.53**	**16.35**

Zone differential for Truck Drivers
(Add to Zone A Base Rate)

Zone B	**.65** per hour
Zone C	**1.15** per hour
Zone D	**1.70** per hour
Zone E	**2.75** per hour

TRUCK DRIVER (continued)

Zone A: Projects within 30 miles of the cities listed.
Zone B: More than 30 miles but less than 40 miles.
Zone C: More than 40 miles but less than 50 miles.
Zone D: More than 50 miles but less than 80 miles.
Zone E: More than 80 miles.

Reference Cities

Albany	Eugene	Madras	Reedsport
Astoria	Goldendale	Medford	Roseburg
Baker	Grants Pass	McMinnville	Salem
Bend	Hermiston	Newport	The Dalles
Bingen	Hood River	Ontario	Tillamook
Brookings	Klamath Falls	Oregon City	Vancouver
Burns	LaGrande	Pendleton	
Coos Bay	Lakeview	Portland	
Corvallis	Longview	Port Orford	

Note: All job or project locations shall be computed (determined) on the basis of road miles and in the following manner. A mileage measurement will start at the entrance to the respective city hall, facing the project (if possible), and shall proceed by the normal route (shortest time-best road) to the geographical center on the highway, railroad, and street construction projects (end of measurement). On all other project contracts, the geographical center where the major portion of the construction is located, shall be considered the center of the project (end measurement).

TRADE	HOURLY BASE RATE	HOURLY FRINGE RATE	TRADE	HOURLY BASE RATE	HOURLY FRINGE RATE

POWER EQUIPMENT OPERATOR

LIST OF CONTRACTORS INELIGIBLE
TO RECEIVE PUBLIC WORKS CONTRACTS
PUBLICATION DATE: JANUARY 1, 2021

To: All Oregon Contracting Agencies

Pursuant to ORS 279C.860, contractors on this list are ineligible to receive public works contracts subject to the Prevailing Wage Rate Law. These contractors and subcontractors, as well as any firm, corporation, partnership or association in which the contractor or subcontractor has a financial interest are ineligible to receive public works contracts until removed from this list.

If you have questions regarding the list or for the most current information regarding persons ineligible to receive prevailing wage contracts, please contact the Prevailing Wage Rate Coordinator in Portland at (971) 673-0839.

	CONTRACTOR NAME	DATE PLACED	REMOVAL DATE
1.	**A1 Dumptruck Services LLC** 703 N Hayden Meadows Dr., #206 Portland, OR 97213 731 N Hayden Meadows Dr., #206 Portland, OR 97217 2408 NE 164th Avenue Vancouver, WA 98684	February 24, 2020	February 23, 2027
2.	**Atilla, Inc.** 5305 River Road N., Ste. B Keizer, OR 97303	August 3, 2018	August 2, 2021
3.	**Kimberly Bell-Eddy** 8535 Woodard Ave SE Salem, OR 97317	January 12, 2016	January 11, 2023
4.	**Cameron Creations** **Steven Cameron** **Nancy Cameron** PO Box 2 Lowell, OR 97452	May 25, 2000	Not to be Removed
5.	**Canell's Flagging LLC** 731 N Hayden Meadows Dr., Ste 107 Portland, OR 97217	November 24, 2020	November 23, 2023
6.	**Angela Canell** 2416 NE 11th Avenue Portland, OR 97212 529 SE Grand #307 Portland, OR 97214	November 24, 2020	November 23, 2023
7.	**Gentry Ceniga** 20949 Knott Road Bend, OR 97702	August 14, 2018	August 13, 2021
8	**CJ Construction, Inc.** 2969 Ferguson St NW Salem, OR 97304 846 55th Ave, Salem, OR 97304	December 11, 2020	November 6, 2023

	CONTRACTOR NAME	DATE PLACED	REMOVAL DATE
9.	**Jennifer Friedman** 2526 Ellen Lane NW Salem, OR 97304 4400 Shaw St NW Salem, OR 97304 4400 Salem-Dallas Hwy Salem, OR 97304 PO Box 5172 Salem, OR 97304	December 11, 2020	October 10, 2023
10.	**Scott Friedman** 2969 Ferguson St NW Salem, OR 97304 4400 Dallas Hwy Salem, OR 97304 PO Box 5172 Salem, OR 97304	December 11, 2020	October 10, 2023
11.	**G & K Masonry Inc.** 20949 Knott Road Bend, OR 97702	August 14, 2018	August 13, 2021
12.	**GNC Construction Services, LLC** 309 S. McLoughlin Blvd. Oregon City, OR 97045	July 21, 2018	July 20, 2021
13.	**Eugene Graeme** 169 SE Cody Lane Madras, OR 97741	July 3, 2017	July 2, 2027
14.	**Green Thumb Landscape and Maintenance, Inc.,** **aka Green Thumb Landscaping,** **aka GT General Contracting** 4400 Dallas Hwy Salem, OR 97304 PO Box 5172 Salem, OR 97304	December 11, 2020	October 10, 2023
15.	**Green Thumb LLC, aka Green Thumb Contracting** 4400 Salem-Dallas Hwy Salem, OR 97304 4400 Shaw St NW Salem, OR 97304 PO Box 5172 Salem, OR 97304	December 11, 2020	October 10, 2023
16.	**High-N-Shine Concrete Floor, Inc.** 9024 Silver Star Ave Vancouver, WA 98664	February 3, 2020	February 2,2023

	CONTRACTOR NAME	DATE PLACED	REMOVAL DATE
17.	**Lisa Hoang,** **aka Kim Lien Hoang,** **aka Lien Kim Hoang,** **aka Kim Hope,** **aka Lisa K Ryan,** **aka Ryan Lien Hoang,** **aka Kim L Hoang,** **aka Lien Hoang Ryan,** **aka Lien K Hoang-Ryan,** **aka Hoang K Lien,** **aka Lisa Hall,** **aka Lisa Kim Ryan,** **aka Lien Ryan,** **aka Lien Hoang Ryan,** **aka Kim Hoang Lien,** **aka K Lisa Hoang** 703 N Hayden Meadows Dr., #206 Portland, OR 97213 731 N Hayden Meadows Dr., #206 Portland, OR 97217 2408 NE 164th Avenue Vancouver, WA 98684	February 24, 2020	February 23, 2027
18.	**Kim Bell Flagging, Inc.** 8535 Woodard Ave SE Salem, OR 97317	January 12, 2016	January 11, 2023
19.	**David P. Miller** 731 NW Naito Parkway, #215 Portland, OR 97209	June 17, 2020	Not to be Removed
20.	**Sang In Nam dba** **Cornerstone Janitorial Services** 130 NE Danbury Ave Hillsboro, OR 97124	September 20, 2016	Not to be Removed
21.	**Hai T. Nguyen** 9024 Silver Star Ave Vancouver, WA 98664	February 3, 2020	February 2, 2023
22.	**NW Flagging LLC** 703 N Hayden Meadows Dr., #206 Portland, OR 97213 731 N Hayden Meadows Dr., #206 Portland, OR 97217 2408 NE 164th Avenue Vancouver, WA 98684	February 24, 2020	February 23, 2027
23.	**Oregon Building & Landscaping Services LLC** 703 N Hayden Meadows Dr., #206 Portland, OR 97213 731 N Hayden Meadows Dr., #206 Portland, OR 97217 2408 NE 164th Avenue Vancouver, WA 98684	February 24, 2020	February 23, 2027

	CONTRACTOR NAME	DATE PLACED	REMOVAL DATE
24.	**Pacific NW Drywall & Accoustics LLC** **aka Pacific NW Drywall & Accoustics** 731 NW Naito Parkway, #215 Portland, OR 97209	June 17, 2020	Not to be Removed
25.	**Phoenix Construction Group, Inc.** 309 S. McLoughlin Blvd. Oregon City, OR 97045	August 24, 2018	August 23, 2021
26.	**Pacharee Polson** 9024 Silver Star Ave Vancouver, WA 98664	February 3, 2020	February 2, 2023
27.	**Portland Safety Equipment, LLC** 309 S. McLoughlin Blvd. Oregon City, OR 97045	August 24, 2018	August 23, 2021
28.	**R.B. Development Corporation Inc.** 14634 Kasel Court NE Aurora, OR 97002	August 3, 2018	August 2, 2021
29.	**Regional Traffic Management LLC** 703 N Hayden Meadows Dr., #206 Portland, OR 97213 731 N Hayden Meadows Dr., #206 Portland, OR 97217 2408 NE 164th Avenue Vancouver, WA 98684	February 24, 2020	February 23, 2027
30.	**SBG Construction Services LLC** 309 S. McLoughlin Blvd. Oregon City, OR 97045	August 24, 2018	August 23, 2021
31.	**Irma Anita Starr** 14634 Kasel Court NE Aurora, OR 97002	August 3, 2018	August 2, 2021
32.	**Norman James Starr** 14634 Kasel Court NE Aurora, OR 97002	August 3, 2018	August 2, 2021
33.	**Alan Tatom** 168 Clearwater Avenue NE Salem, OR 97301	July 10, 2015	July 9, 2025
34.	**Phillip Walker** 580 Market Street NE Salem, OR 97301	July 10, 2015	July 9, 2025
35.	**WCI Construction LLC** 169 SE Cody Lane Madras, OR 97741	July 3, 2017	July 2, 2027

LIST OF CONTRACTORS INELIGIBLE
TO RECEIVE PUBLIC WORKS CONTRACTS
PUBLICATION DATE: JANUARY 1, 2021

	CONTRACTOR NAME	DATE PLACED	REMOVAL DATE
36.	**WWJD Traffic Control, Inc.** 168 Clearwater Avenue NE Salem, OR 97301	July 10, 2015	July 9, 2025

VAL HOYLE, COMMISSIONER
BUREAU OF LABOR AND INDUSTRIES

PREVAILING WAGE RATE FORMS

WH-38	**Certified Payroll Form**
WH-39	**Public Works Fee Information Form**
WH-40	**Public Works Fee Adjustment Form**
WH-81	**Notice of Public Works**
WH-118	**Planned Public Improvement Summary**
WH-119	**Capital Improvement Cost Comparison Estimate**

OREGON BUREAU OF LABOR & INDUSTRIES, PREVAILING WAGE RATE

INSTRUCTIONS FOR COMPLETING THE PREVAILING WAGE RATE PAYROLL/CERTIFIED STATEMENT FORM (WH-38)

The Payroll/Certified Statement form (WH-38) may be used by contractors for reporting their payroll as required by ORS 279C.845 on public works projects subject to the Prevailing Wage Rate (PWR) Law. Although the U.S. Department of Labor (US DOL) has not officially approved this form, it is designed to meet the requirements of the federal Davis-Bacon Act. For projects associated with the U.S. Department of Housing and Urban Development (HUD), contact the public agency (owner) associated with the project for assistance with payroll reporting.

Contractors are not required to use the WH-38 form in reporting their payroll; however, the contractor must provide all of the information contained in the form, including the certified statement on page two. The contractor must sign the certified statement, certifying the accuracy of the information reported on the payroll, including representations pertaining to the provision of fringe benefits to employees by third parties, and submit it with each weekly payroll report. Detailed instructions concerning the preparation of the form follow:

Complete the top third of the form. Be sure to enter the date the contract was first advertised for bid. If you are not sure of this date, contact the public agency (owner) associated with the project. The "Payroll No." is a US DOL requirement and represents the number of weeks the contractor performed work on the project.

Column 1 – NAME AND ADDRESS: Write the employee's full name on each payroll submitted. The employee's address must be included on the first payroll submitted. The address need not be shown on subsequent payrolls submitted unless the address changes. The US DOL requires an employee identification number for each individual employee, on each payroll submitted. This number may be, but does not have to be, the last four digits of the employee's social security number.

Column 2 – CLASSIFICATION: For assistance in determining the correct classification, use the Oregon Bureau of Labor & Industries' (BOLI's) publication "Definitions of Covered Occupations for Public Works Contracts in Oregon." On the WH-38, list the classification that is most descriptive of the work actually performed by the employee. Give the group number for those classifications that include such information. Indicate which workers are apprentices, if any, and give their current percentage, classification, and group number when applicable. If an employee works in more than one classification, use the highest rate for all hours worked, or use separate line entries to show hours worked and hourly rates for each classification.

Column 3 – DAY AND DATE: Enter the day of the week (M, T, W, Th, F, S, and Sn) in the top row of boxes, and the corresponding date below.

HOURS WORKED EACH DAY: Enter the total number of straight time hours worked in the row marked "ST." Generally, hours worked over eight (8) in a day or work performed on Saturdays, Sundays, and legal holidays should be entered as overtime ("OT") hours worked. Contractors who have adopted and followed a written work schedule of four consecutive ten-hour days (Monday through Thursday or Tuesday through Friday) may enter hours worked over ten (10) in a day as overtime hours. For more information on overtime requirements, see the Contractor Responsibilities section of OR Bureau of L&I's publication, "*Prevailing Wage Rate Laws*."

Check the correct work schedule box to indicate the employee's weekly work schedule: 5/8 or 4/10. Enter the employee's regular hourly schedule for the week being reported next to the "Reg. Hrly. Schd:_____to_____." For example: 7:00 a.m. to 4:30 p.m.

Column 4 – TOTAL HOURS: Enter separately the total number of straight time and overtime hours worked by the employee (in each classification, if applicable) on the PWR project during the week. Enter the total number of straight time hours worked in the lower box ("ST"); enter the total number of overtime hours worked in the top box ("OT").

Column 5 – HOURLY BASE RATE: Enter the hourly base rate (plus zone pay, if any) and the hourly overtime rate (plus zone pay, if any) paid to the employee in the appropriate straight time and overtime

boxes. (Payment of not less than one and one half times the base rate of pay, including zone pay, but not including fringe benefits, is required to be paid for overtime hours pursuant to ORS 279C.540). Generally, use the appropriate prevailing wage rates in effect at the time the project was first advertised for bid by the public agency. If this date is not known, or if the project was not advertised for bid, contact the public agency (owner) associated with the project for assistance with applicable rates.

Column 6 – HOURLY FRINGE BENEFIT AMOUNT PAID AS WAGES TO THE EMPLOYEE: Enter hourly fringe benefit amounts paid directly to the employee as wages. (For overtime hours worked, it is not necessary to pay time and one half for the fringe benefit portion of the prevailing wage rate.)

Column 7 – GROSS AMOUNT EARNED: Enter the gross amount earned for work on the PWR project during the week. If part of the employee's wages for the pay period were earned on projects other than the project described on the WH-38, or if the employee is paid less often than on a weekly basis, enter in column 7 first the gross amount earned on the PWR project for the week, then the total gross amount earned for the pay period. For example: $567.84 / $1,267.27.

Column 8 – ITEMIZED DEDUCTIONS, FICA, FED, STATE, ETC.: Enter deductions withheld from wages for the pay period. All deductions must be in accordance with the provisions of ORS 652.610 (and as defined in Regulations, Part 3 (29 CFR Subtitle A), issued by the Secretary of Labor under the Copeland Act, as amended (48 Stat. 948, 63 Stat. 108, 72 Stat. Stat. 967, 76 Stat. 357; 40 U.S.C 276c) on projects subject to Davis-Bacon Act). For projects subject to the Davis-Bacon Act, itemize the deductions.

Column 9 – NET WAGES PAID: Enter the total amount of net wages actually paid to the employee for the pay period. Calculate this figure by subtracting the total deductions reported in Column 8 from the gross amount of wages for the pay period reported in the bottom portion of Column 7.

Column 10 – HOURLY FRINGE BENEFITS PAID TO BENEFIT PARTY, PLAN, FUND OR PROGRAM: Enter the hourly amount of fringe benefits paid to each individually approved party, plan, fund, or program, for each employee. List these amounts separately on the lines provided. Any contractor who is making payments to approved parties, plans, funds or programs in amounts less than the required hourly fringe benefit is obligated to pay the difference directly to the employee as wages in lieu of fringe benefits, and to show that amount in Column 6 of this form. For information on how to calculate hourly fringe benefit credits, see Appendix A in OR L&I's publication, "*Prevailing Wage Rate Laws*."

Column 11 – NAME OF BENEFIT PARTY, PLAN, FUND OR PROGRAM: Enter the name of the party, plan, fund, or program that corresponds to the amount paid as an hourly fringe benefit in Column 10.

CALCULATION CHECK

In order to determine whether the wages and fringe benefits paid are sufficient to meet prevailing wage rate requirements, perform the following check:

1. For each classification listed in column 2, compute the sum of:
   a) the hourly base rate of pay shown in Column 5,
   b) the hourly fringe benefit amount paid as wages to employee shown in Column 6, and
   c) the hourly fringe benefits paid to benefit party, plan, fund or program shown in Column 10.

2. This sum must equal or exceed the total of the hourly base rate (including zone pay) and the hourly fringe benefit rate for that classification as listed in the appropriate issue of OR Bureau of L&I's publication, *Prevailing Wage Rates for Public Works Contracts in Oregon*.

IF YOU HAVE QUESTIONS REGARDING COMPLETION OF THIS FORM, CONTACT THE PREVAILING WAGE RATE UNIT OF THE OREGON BUREAU OF LABOR & INDUSTRIES AT (971) 673-0838.

NOTE: PAYROLL/CERTIFIED STATEMENTS ARE ONLY REQUIRED TO BE SUBMITTED TO THE PUBLIC AGENCY ASSOCIATED WITH THE PROJECT.

CERTIFIED PAYROLL AND OTHER FORMS ARE AVAILABLE ON OUR WEBSITE:
WWW.OREGON.GOV/BOLI

BUREAU OF LABOR AND INDUSTRIES
WAGE AND HOUR DIVISION

PAYROLL/CERTIFIED STATEMENT FORM WH-38
FOR USE IN COMPLYING WITH ORS 279C.845*

PRIME CONTRACTOR ☐ SUBCONTRACTOR ☐ PAYROLL NO.______________________ FINAL PAYROLL ☐

Business Name (DBA): Phone: (   ) CCB Registration Number:

Project Name: Project Number: Type of Work:

Street Address:

Mailing Address:

Project Location:

Project County:

Date Pay Period Began: Date Pay Period Ended:

THIS SECTION FOR PRIME CONTRACTORS ONLY

Public Contracting Agency Name:
Phone: (   )
Date Contract Specifications First Advertised for Bid:
Contract Amount:

THIS SECTION FOR SUBCONTRACTORS ONLY

Subcontract Amount:
Prime Contractor Business Name (DBA):
Prime Contractor Phone: (   )
Prime Contractor's CCB Registration Number:
Date You Began Work on the Project:

(1)	**(2)**		**(3) DAY AND DATE**							**(4)**	**(5)**	**(6)**	**(7)**	**(8)**	**(9)**	**(10)**	**(11)**
NAME , ADDRESS AND EMPLOYEE'S IDENTIFICATION NUMBER	**CLASSIFICATION (INCLUDE GROUP # AND APPRENTICESHIP STEP IF APPLICABLE)**									**TOTAL HOURS**	**HOURLY BASE RATE**	**HOURLY FRINGE BENEFIT AMOUNTS PAID AS WAGES TO EMPLOYEE**	**GROSS AMOUNT EARNED (see directions)**	**ITEMIZED DEDUCTIONS FICA, FED, STATE, ETC.**	**NET WAGES PAID**	**HOURLY FRINGE BENEFITS PAID TO BENEFIT PARTY, PLAN, FUND, OR PROGRAM**	**NAME OF BENEFIT PARTY, PLAN, FUND, OR PROGRAM**
			HOURS WORKED EACH DAY														
		OT															
		ST															
		Schedule: 5/8 ☐ 4/10 ☐; Reg. Hrly. Schd: _____to_____.															
		OT															
		ST															
		Schedule: 5/8 ☐ 4/10 ☐; Reg. Hrly. Schd: _____to_____.															
		OT															
		ST															
		Schedule: 5/8 ☐ 4/10 ☐; Reg. Hrly. Schd: _____to_____.															
		OT															
		ST															
		Schedule: 5/8 ☐ 4/10 ☐; Reg. Hrly. Schd: _____to_____.															
		OT															
		ST															
		Schedule: 5/8 ☐ 4/10 ☐; Reg. Hrly. Schd: _____to_____.															

*Although this form has not been officially approved by the U.S. Department of Labor, it is designed to meet the requirements of both the state PWR law and the federal Davis-Bacon Act.

THIS FORM CONTINUED ON REVERSE

CERTIFIED STATEMENT

Date: _____

I, _____, _____
(NAME OF SIGNATORY PARTY) (TITLE)
do hereby state:
(1) That I pay or supervise the payment of the persons employed by:

_____
(CONTRACTOR, SUBCONTRACTOR OR SURETY)
on the _____; that during the payroll period
(BUILDING OR WORK)
commencing on the _____ day of _____, _____, and ending the _____ day
(MONTH) (YEAR)
of _____, _____, all persons employed on said project have been paid the
(MONTH) (YEAR)
full weekly wages earned, that no rebates have been or will be made either directly or indirectly to or on behalf of said _____
(CONTRACTOR, SUBCONTRACTOR OR SURETY)
from the full weekly wages earned by any person, and that no deductions have been made either directly or indirectly from the full wages earned by any person, other than permissible deductions as specified in ORS 652.610, and as defined in Regulations, Part 3 (29 CFR Subtitle A), issued by the Secretary of Labor under the Copeland Act, as amended (48 Stat. 948, 63 Stat. 108, 72 Stat. 967; 76 Stat. 357; 40 U.S.C. 276c), and described below:

_____

(2) That any payrolls otherwise under this contract required to be submitted for the above period are correct and complete; that the wage rates for workers contained therein are not less than the applicable wage rates contained in any wage determination incorporated into the contract; that the classifications set forth therein for each worker conform with work performed.

(3) That any apprentices employed in the above period are duly registered in a bona fide apprenticeship program registered with a state apprenticeship agency recognized by the Bureau of Apprenticeship and Training, United States Department of Labor, or if no such recognized agency exists in a state, are registered with the Bureau of Apprenticeship and Training, United States Department of Labor.

I HAVE READ THIS CERTIFIED STATEMENT, KNOW THE CONTENTS THEREOF AND IT IS TRUE TO MY KNOWLEDGE:

_____
(NAME AND TITLE)

_____
(SIGNATURE AND DATE)

In addition to completing sections (1) - (3), if your project is subject to the federal Davis-Bacon Act requirements, complete the following section as well:

(4) That:
(a) WHERE FRINGE BENEFITS ARE PAID TO APPROVED PLANS, FUNDS OR PROGRAMS

☐ - In addition to the basic hourly wage rates paid to each laborer or mechanic listed in the above referenced payroll, payments of fringe benefits as listed in the contract have been or will be made to appropriate programs for the benefit of such employees, except as noted in Section 4(c) below.

(b) WHERE FRINGE BENEFITS ARE PAID IN CASH

☐ - Each laborer or mechanic listed in the above referenced payroll has been paid, as indicated on the payroll, an amount not less than the sum of the applicable basic hourly wage rate plus the amount of the required fringe benefits as listed in the contract, except as noted in Section 4(c) below.

(c) EXCEPTIONS:

EXCEPTION (CRAFT)	EXPLANATION

REMARKS:

NAME AND TITLE SIGNATURE

THE WILLFUL FALSIFICATION OF ANY OF THE ABOVE STATEMENTS MAY SUBJECT THE CONTRACTOR OR SUBCONTRACTOR TO CIVIL OR CRIMINAL PROSECUTION. SEE SECTION 1001 OF TITLE 18 AND SECTION 231 OF TITLE 31 OF THE UNITED STATES CODE.

FILE THIS FORM WITH THE PUBLIC AGENCY ASSOCIATED WITH THE PROJECT
NOTE TO CONTRACTORS: YOU MUST ATTACH COPIES OF THIS FORM TO EACH OF YOUR PAYROLL SUBMISSIONS ON THIS PROJECT.
INSTRUCTIONS AND ADDITIONAL FORMS ARE AVAILABLE ON OUR WEBSITE: WWW.OREGON.GOV/BOLI.

CONTRACT FEE SECTION
PREVAILING WAGE RATE UNIT
BUREAU OF LABOR & INDUSTRIES
800 N.E. OREGON ST., #1045
PORTLAND, OR 97232-3601
PHONE: (971) 673-0852
FAX: (971) 673-0769

For Office Use Only:

Project DB #:_____

PUBLIC WORKS FEE INFORMATION FORM

For use by public agencies that have contracted with a contractor on a public works project regulated by ORS 279C.800 to 279C.870, in compliance with ORS 279C.825. Also for use by public agencies that are a party to a public works project pursuant to ORS 279C.800(6)(a)(B), (C) (D) or (E).

PUBLIC AGENCIES: Please complete and mail this form to the Bureau of Labor & Industries (BOLI) at the above address, along with the public works fee of one-tenth of one percent of the contract price (contract amount x .001), payable to "Bureau of Labor and Industries." **The minimum fee is $250.00; the maximum fee is $7,500.00.** BOLI may be unable to properly credit you for payment received without the following completed information.

PUBLIC AGENCY: _____ **AGENCY #:**_____

AGENCY MAILING ADDRESS: _____

CITY, STATE, ZIP_____

AGENCY CONTACT PERSON: _____ **PHONE: ( )** _____

PROJECT MANAGER NAME:_____ **PHONE: ( )** _____

PROJECT NAME: _____

CONTRACT NAME (if part of larger project):_____

PROJECT LOCATION: _____

PROJECT NO: _____ **DATE CONTRACT FIRST ADVERTISED:** _____

DATE CONTRACT AWARDED: _____ **CONTRACTOR CCB#:** _____

CONTRACTOR BUSINESS NAME (DBA): _____

CONTRACTOR ADDRESS: _____

CITY, STATE ZIP _____

CONTRACT AMOUNT: $_____ **FEE AMOUNT DUE/PAID: $**_____

If less than $50K, is it part of a larger project? ☐ **yes** ☐ **no** **Contract amount x .001 = fee due**

(Please duplicate this form for future use.)

CONTRACT FEE SECTION
PREVAILING WAGE RATE UNIT
BUREAU OF LABOR & INDUSTRIES
800 N.E. OREGON ST., #1045
PORTLAND, OR 97232-3601
PHONE: (971) 673-0852
FAX: (971) 673-0769

For Office Use Only:

Project DB #:_____

PUBLIC WORKS FEE ADJUSTMENT FORM

USE THIS FORM FOR RECONCILIATION OF FEES UPON COMPLETION OF PUBLIC WORKS PROJECTS

(As required by ORS 279C.825 and OAR 839-025-0210)

PUBLIC AGENCIES: Complete and mail this form to the Bureau of Labor & Industries at the above address after completion of the public work project and not less than 30 days after the final progress payment is made to the contractor. Public agencies are required to determine the final contract price, including all change orders or other adjustments to the original contract price, and to calculate the adjusted prevailing wage rate fee based on the revised contract price. Documentation must be included to support the final contract price. Documentation of the final contract price may consist of change orders or other contract documents substantiating the amount of the contract. The prevailing wage rate fee of one-tenth of one percent (.001) shall be applied to the final contract price, with credit taken for fees already submitted. The public agency must submit any additional fee payable to "Bureau of Labor and Industries," or submit any request for refund, with this adjustment form. **THE MINIMUM FEE IS $250.00; THE MAXIMUM FEE IS $7,500.00. NO ADDITIONAL FEE IS REQUIRED TO BE PAID, AND REFUNDS WILL NOT BE MADE, IF THE BALANCE DUE OR THE REFUND DUE IS LESS THAN $100.00.**

PUBLIC AGENCY: _____ **AGENCY #:**_____

AGENCY CONTACT PERSON:_____ **PHONE :( )**_____

MAILING ADDRESS:_____

PROJECT NAME:_____

CONTRACT NAME (if part of larger project):_____

PROJECT NUMBER:_____ **PROJECT LOCATION:**_____

CONTRACTOR/BUSINESS NAME (DBA):_____

CONTRACTOR CCB#:_____ **DATE AWARDED:**_____

FINAL CONTRACT/PROJECT AMOUNT:_____ **FINAL FEE DUE:**_____
(Include all change orders and adjustments to the contract price) **(Final Contract amount X .001)**

ORIGINAL CONTRACT AMOUNT:_____ **INITIAL FEE PAID:**_____
(Original Contract amount X .001)

TOTAL ADJUSTMENT:_____ **BALANCE DUE*:**_____
or
REFUND DUE*:_____
***Final contract fee less initial fee paid**

Sample Calculation:			
Final Contract Amount:	**$ 400,000.00**	**Final Fee Due:**	**$ 400.00**
Original Contract Amount:	**- 300,000.00**	**Initial Fee Paid:**	**- 300.00**
Total Adjustment:	**$ 100,000.00**	**Additional Amount Due:**	**$ 100.00**

BUREAU OF LABOR AND INDUSTRIES
NOTICE OF PUBLIC WORKS
(For use by public agencies in complying with ORS 279C.835)

For Office Use Only:

Project DB #:_____

NOTE: ORS 279C.835 requires that public contracting agencies include with this form a copy of the disclosure of first-tier subcontractors submitted pursuant to ORS 279C.370.

PUBLIC AGENCY INFORMATION

Agency Name: _____

Agency Division:_____ Agency # (if known):_____

Address:_____

City, State, Zip:_____

Email Address: _____

Agency Representative: _____ Phone: _____

SECTION A: To be completed when a public agency awards a contract to a contractor for a public works project, including CM/GC projects. (See reverse for public works projects in which no public agency awards a contract to a contractor.)

CONTRACT INFORMATION:

Project Name: _____

Contract Name (if part of larger project): _____

Project #: _____ Contract #:_____

Project Manager Name:_____ Phone: _____ Fax:_____

Project Location (Street(s), City): _____ Project County: _____

Date specifications first advertised for bid (if not advertised, date of RFP or first contact with contractor): _____

OR If CM/GC contract, date contract became a public works contract (see OAR 839-025-0020(8)): _____

Contract Amount: $_____

Is this contract part of a larger project? YES ☐ NO ☐ If yes, total project amount: $_____

If yes, **INITIAL** date specifications for project advertised for bid (see OAR 839-025-0020(6)(b)): _____

Will project use federal funds that require compliance with the Davis-Bacon Act? YES ☐ NO ☐

Date Contract Awarded: _____ Date Work Expected to Begin: _____ Date Work Expected to be Complete: _____

PRIME CONTRACTOR INFORMATION:

Name: _____

Address: _____

City, State Zip:_____ Phone:_____

Construction Contractors Board Registration #: _____

Name of Bonding Company for Payment Bond: _____

Address: _____

Agent Name: _____ Phone: _____ Payment Bond #: _____

☐ Copy of first-tier subcontractors attached (**see NOTE above**).

Signature of agency representative completing form: _____

Printed Name: _____ Phone: _____ Date:_____

Email Address:_____

THIS FORM WILL BE RETURNED TO THE PUBLIC AGENCY FOR CORRECTION AND RESUBMITTAL IF INCOMPLETE.

Complete this page for public works projects in which NO PUBLIC AGENCY AWARDS A CONTRACT TO A CONTRACTOR. Complete the CONTRACT INFORMATION *AND* SECTION B, C, D or E, whichever applies to the project.

CONTRACT INFORMATION:

Name of Project Owner:_____ Phone: _____

Project Name: _____ Project #: _____

Project Location (Street(s), City): _____ Project County: _____

Total Project Cost: $_____ Amount of Public Funds Provided for the Project: $_____

Name(s) of Public Agency(ies) Providing Public Funds: _____

Will project use federal funds that require compliance with the Davis-Bacon Act? YES ☐ NO ☐

Date Work Expected to Begin: _____ Date Work Expected to be Complete: _____

SECTION B: **To be completed when a project is a public works pursuant to ORS 279C.800(6)(a)(B)** (a project for the construction, reconstruction, major renovation or painting of a road, highway, building, structure or improvement of any type **that uses $750,000 or more of funds of a public agency**).

Date the public agency or agencies committed to the provision of funds for the project: _____

SECTION C: **To be completed when a project is a public works pursuant to ORS 279C.800(6)(a)(C)** (a project for the construction of a privately owned road, highway, building, structure or improvement of any type **that uses funds of a private entity and in which 25 percent or more of the square footage of the completed project will be occupied or used by a public agency**).

Total square footage of privately owned road, highway, building, structure or improvement: _____

Percent of total square footage of the completed project that will be occupied or used by a public agency: _____

Date the public agency or agencies entered into an agreement to occupy or use the completed project: _____

SECTION D: **To be completed when a project is a public works pursuant to ORS 279C.800(6)(a)(D)** (a project that includes the construction or installation of a **device, structure or mechanism that uses solar radiation** on public property, regardless of project cost or whether the project uses funds of a public agency).

Date the public agency entered into an agreement for the project: _____

SECTION E: **To be completed when a project is a public works pursuant to ORS 279C.800(6)(a)(E)** (a project for the construction, reconstruction, major renovation or painting of a road, highway, building, structure, or improvement of any type that occurs, with or without using funds of a public agency, **on real property that a public university listed in ORS 352.002 owns**).

Date the public agency entered into an agreement for the project: _____

Signature of agency representative completing form: _____

Printed Name: _____ Phone: _____ Date:_____

Email Address: _____

THIS FORM WILL BE RETURNED TO THE PUBLIC AGENCY FOR CORRECTION AND RESUBMITTAL IF INCOMPLETE.

RETURN THIS COMPLETED FORM TO:

Prevailing Wage Rate Unit • Bureau of Labor & Industries • 800 NE Oregon Street, #1045 • Portland, OR 97232-3601

Telephone (971) 673-0852 • FAX (971) 673-0769 • pwremail@boli.state.or.us

PLANNED PUBLIC IMPROVEMENT SUMMARY

FISCAL YEAR: _____ - _____ _____ **PAGE** _____ **OF** _____

(Name of State or Local Government Agency)

Project Number, if applicable	Project Name	Project Location	Estimated Total On-site Construction Costs	Work Performed by Contractor or Agency?

ORS 279C.305 requires that not less than 30 days prior to adoption of its budget for the subsequent budget period, or before starting to construct a public improvement, each contracting agency shall prepare and file with the Commissioner of the Bureau of Labor and Industries a list of every public improvement that the contracting agency plans to fund in the budget period, identifying each improvement by name and estimating the total on-site construction costs. The list must also state whether the contracting agency intends to perform the construction through a private contractor. If the contracting agency intends to use the contracting agency's own equipment or personnel to perform construction work on a public improvement, and the estimated value of the construction work that the contracting agency intends to perform with the contracting agency's own equipment or personnel exceeds $200,000 (or $125,000 if the public improvement involves the resurfacing of highways, roads or streets at a depth of two or more inches), the contracting agency shall file with the commissioner not later than 180 days before construction begins on the public improvement an analysis that shows that the contracting agency's decision conforms to the state's policy that contracting agencies make every effort to construct public improvements at the least cost to the contracting agency. Public agencies are required to keep and preserve a full, true and accurate account of the costs of performing the work, including all categories of costs described in ORS 279C.305(3)(b). The final account of the costs is a public record.

Use this form (WH-118) to list planned public improvements. Use form WH-119 (Public Improvement Project Cost Analysis) to report the agency's cost analysis.

Mail completed forms to: Prevailing Wage Rate Unit
Bureau of Labor & Industries
800 N.E. Oregon St., #1045
Portland, OR 97232-2180

_____
(Name of Agency Official)

_____
(Signature of Agency Official)

PUBLIC IMPROVEMENT PROJECT COST ANALYSIS

Contracting Agency: _____ **Project Name/Number:** _____

Department: _____ **Estimated Construction Period:** _____

ESTIMATED CONTRACTOR COSTS				
Item Description	Estimated Quantity	Unit Cost	Total Estimated Cost Per Item	
				TOTAL OF ALL CONTRACTOR COSTS
				$

ESTIMATED CONTRACTING AGENCY COSTS							
Labor	Equipment	Administration and Overhead	Tools and Materials	Cost of Any Contracts Agency Must Enter	Quality Control Testing	Any Other Necessary and Related Costs	
							TOTAL OF ALL PUBLIC AGENCY COSTS
							$

The above-named agency has determined that this project can be performed at the least cost by: _____ Agency _____ Contractor (check one)

ORS 279C.305 requires that not less than 30 days prior to adoption of its budget for the subsequent budget period, or before starting to construct a public improvement, each contracting agency shall prepare and file with the Commissioner of the Bureau of Labor and Industries a list of every public improvement that the contracting agency plans to fund in the budget period, identifying each improvement by name and estimating the total on-site construction costs. The list must also state whether the contracting agency intends to perform the construction through a private contractor. If the contracting agency intends to use the contracting agency's own equipment or personnel to perform construction work on a public improvement, and the estimated value of the construction work that the contracting agency intends to perform with the contracting agency's own equipment or personnel exceeds $200,000 (or $125,000 if the public improvement involves the resurfacing of highways, roads or streets at a depth of two or more inches), the contracting agency shall file with the commissioner not later than 180 days before construction begins on the public improvement an analysis that shows that the contracting agency's decision conforms to the state's policy that contracting agencies make every effort to construct public improvements at the least cost to the contracting agency. Public agencies are required to keep and preserve a full, true and accurate account of the costs of performing the work, including all categories of costs described in ORS 279C.305(3)(b). The final account of the costs is a public record. Use Form WH-118 (Planned Public Improvement Summary) to list planned public improvements. Use this form (WH-119) to report the agency's cost analysis.

Mail completed forms to:

Prevailing Wage Rate Unit
Bureau of Labor & Industries
800 N.E. Oregon St., #1045
Portland, OR 97232-2180

_____
(Name of Agency Official)

_____
(Signature of Agency Official)

The 2018 edition of the ***Prevailing Wage Rate Laws Handbook*** is now available. One complimentary hard copy of each Prevailing Wage Rate (PWR) publication is available upon request by emailing Oregon BOLI Labor & Industries at pwremail@boli.state.or.us or calling (971) 673-0838. Additional copies are available at cost, plus postage.

In addition to providing this and other PWR publications, Oregon BOLI Labor & Industries' PWR Unit regularly offers free, informational seminars for both public agencies and contractors. The current schedule is available online at https://www.oregon.gov/boli/employers/Pages/prevailing-wage-seminars.aspx.

Prior to responding below, please consider that all PWR-related information is available online at http://www.oregon.gov/BOLI/WHD/PWR/Pages/index.aspx. If you are interested in receiving the handbook and/or being included on our mailing lists for future seminar notifications, please complete the form below and return it to the PWR Unit. You may mail this form to the address on the opposite side of the form, or fax it to (971) 673-2372.

☐ Please send me the 2018 edition of the ***Prevailing Wage Rate Laws Handbook***.

☐ Please add me to the mailing list to receive information about OR BOLI PWR seminars/webinars.

☐ Please add me to the e-mailing list to receive information about OR BOLI PWR seminars/webiners.

_____
AGENCY OR CONTRACTOR BUSINESS NAME and PHONE NUMBER (Required)

_____
AGENCY OR CONTRACTOR BUSINESS E-MAIL ADDRESS (Please print clearly)

_____
MAILING ADDRESS

_____
CITY, STATE, ZIP

_____
NAME OF REPRESENTATIVE and PHONE NUMBER if different from above.

place
stamp
here

OREGON BUREAU OF LABOR & INDUSTRIES
PREVAILING WAGE RATE UNIT
800 NE OREGON #1045
PORTLAND, OR 97232