GREATER ALBANY
PUBLIC SCHOOLS

GREATER ALBANY PUBLIC SCHOOL DISTRICT 8J

SUNRISE 2021 MECHANICAL UPGRADE PROJECT

BID DOCUMENTS

HMK COMPANY

Landis Consulting Engineers

MFIA INC.

OCTOBER 26, 2020

PROJECT MANAGER:	Ken Gruenwald, Sr. Project Manager HMK Company PO Box 1176 Albany, Oregon 97321 Phone: (971) 304 - 0014 Email: ken.gruenwald@hmkco.org
MECHANICAL ENGINEER:	Scott Miller, Principal MFIA Inc. 2007 SE Ash Street Portland, Oregon 97214 Phone: 503 – 234 - 0548 Email: scott.miller@mfia-eng.com
SCHOOL DISTRICT:	Russell Allen, Dir. of Business & Operations Greater Albany Public Schools 718 Seventh Avenue SW Albany, OR 97321-2320 Phone: 541-967-4505 Fax: 541-967-4587 Email: russ.allen@albany.k12.or.us
PROJECT:	Sunrise Elementary Mechanical Upgrade Project
LOCATIONS:	Sunrise Elementary School 730 19th Avenue SE Albany, Oregon 97322

TABLE OF CONTENTS

DIVISION 23

DIVISION 26 – TECHNICAL SPECIFICATIONS PROVIDED BY LANDIS CONSULTING ENGINEERING SERVICES

DIVISION 26

DRAWINGS

DRAWINGS CONTINUED

THE GREATER ALBANY PUBLIC SCHOOL DISTRICT 8J
SUNRISE 2021 MECHANICAL UPGRADE PROJECT
Bids Due 2:00 PM, NOVEMBER 24, 2020

INVITATION FOR BIDS

NOTICE IS HEREBY GIVEN that sealed bids will be accepted on behalf of the Greater Albany Public School District 8J, by Ken Gruenwald, Sr. Project Manager, at the HMK Company Office located at 403 W First Avenue, Suite 4, Albany, OR 97321 until **2:00 PM** Local Time, **November 24, 2020** at which time and place bids will be closed. The bids will be publicly opened and read immediately after closing.

The work consists of schoolwide mechanical upgrades of heating and ventilation equipment, boilers, exhaust fans, pumps and hydronic piping.

The following deadlines and restrictions are applicable to the project: Project start date **June 14, 2021**. Contract must meet a Substantial Completion date of **August 20, 2021.**

A **MANDATORY** Pre-Bid Meeting will be held at **3:00 PM** on **November 3, 2020** at the **Sunrise Elementary School** located at **730 SE 19th Avenue, Albany OR 97321**. Representatives of the Contractors will meet with the Owner and Project Manager for review of the project specifications and then visit the site for a walk of the facility.

All bids must be submitted on the bid forms furnished to the bidders. Each bid shall be submitted in a sealed envelope and plainly marked **"SUNRISE 2021 MECHANICAL UPGRADE PROJECT"** and show the name and business address of the bidder. Each bid must be accompanied by an unconditional cashier's check, certified check or surety bond of the bidder in the amount of ten percent (10%). Unsuccessful bidders will have their security refunded to them when the contract has been awarded.

Bid documents may be obtained from HMK Company web site https://www.hmkco.org/bid-documents/

Any objections to or comments upon the bid specifications must be submitted in writing to the attention of Ken Gruenwald, Sr. Project Manager, HMK Company, 403 W First Ave., Suite 7| PO Box 1176, Albany, OR 97321. To be considered, such objections or comments must be received at least FIVE (5) working days before the bid closing date.

This contract is for a public work subject to ORS 279C.800 to 279C.870 (the Oregon Prevailing Wage Rate Law). **BOLI wage rates will be applicable to this project.** The wage rates are included in the bid documents which are available as noted above.

No bid for a construction contract shall be received or considered by the public contracting agency unless the bidder is licensed by the Construction Contractors Board of the State of Oregon as required by ORS 701.035 and 701.055. Each bid must identify whether the bidder is an Oregon resident bidder, as defined in ORS 279A.120.

Bidder's attention is directed to compliance with ORS 279C.370 regarding submission of the First-Tier Subcontractor Disclosure Form. If the contract amount exceeds $100,000.00, the First-Tier Subcontractor Disclosure Form will be required and may be submitted either with the bid or within **two (2)** hours after the bid closing time and date at the bid site address. Failure to provide the First-Tier Subcontractor Disclosure Form may result in bid rejection.

The District reserves the right to reject any or all bids, to waive formalities, and to postpone the award of the contract for thirty (30) days. All bids and all prices quoted in bids shall be firm for a period of thirty (30) days after the bid closing date.

October 26, 2020

Ken Gruenwald, Sr. Project Manager
on behalf of:
Greater Albany Public School District 8J

PART 1 – GENERAL

1.1 GENERAL

A. The Work contemplated under this contract with the Greater Albany Public School District 8J, (also referred to as GAPS, the Owner or the District), includes all labor, materials, transportation, equipment and services necessary for, and reasonably incidental to, the completion of all Work in connection with the project described in the bidding documents.

B. A brief summary of the Work to be completed for the District is schoolwide mechanical upgrades of heating and ventilation equipment, boilers, exhaust fans, pumps and hydronic piping.

C. Provide Alternate Pricing as indicated in 00 2300

1.2 EXAMINATION OF SITE AND CONDITIONS

A. Prior to submitting a bid, the bidder shall examine the facilities, and ascertain all of the physical conditions in relation thereto. The bidder shall also make a careful examination of the drawings, specifications and other contract documents and shall fully inform himself as to the quantity of materials and the sources of supply of the materials. Failure to make these precautions will not release the successful bidder from entering into a contract or excuse him from performing the Work in strict accordance with the terms of the contract.

B. The Owner will not be responsible for any loss or any unanticipated costs that may be suffered by the successful bidder as a result of such bidder's failure to fully inform himself in advance with regard to all conditions pertaining to the Work and the character of the Work required. No statement made by any officer, agent or employee of the Owner in relation to the physical conditions pertaining to the site of the Work will be binding on the Owner.

1.3 INTERPRETATION OF CONTRACT DOCUMENTS

A. If any person contemplating submitting a bid for the proposed contract finds discrepancies in, or omission from, or is in doubt as to the true meaning of any part of the drawings, specifications or form of contract documents, he may submit to the Architect a written request for an interpretation thereof to be received in the office of the Architect no later than **7 calendar days before bid, before 2:00 PM** local time. The person submitting the request will be responsible for its delivery prior to the time of closing.

B. Any official interpretation of the drawings, specifications, and conditions of the contract or forms of contract documents will be made only by subsequent addenda issued by the Project Manager. The Owner will not be responsible for any other explanation or interpretation of the proposed documents.

1.4 SPECIFIED PRODUCTS AND SUBSTITUTIONS

A. Bids must be based upon the use of items and manufacturers named in the specifications, or, approved equals issued by addenda during the bidding period. <u>Approval of equals or substitutions must not be assumed.</u>

B. If a prospective bidder or supplier seeks approval of a particular manufacturer's material or product other than the material, product and / or manufacturer designated in the specifications, he may submit a written request for such substitute material, product and / or manufacturer. Substitution requests are to be submitted using the Substitution Request Form included in this project manual. Substitution requests must be received in the office of the architect no later than **7 calendar days before bid, before 2:00 PM** local time. The person requesting the substitution will be responsible for delivery of the substitution request form prior to the time of closing. **Emailed Substitution Request Forms will be accepted by Ken Gruenwald at ken.gruenwald@hmkco.org .**

C. Approval of substitution requests will be made only by addenda issued by the Project Manager during the bidding period. The Owner will not be responsible for any other approval of a particular manufacturer's materials.

1.5 PRE-BID MEETING

A. A MANDATORY Pre-Bid Meeting will be held at **3:00 PM** on **November 3, 2020** at the **Sunrise Elementary School** located at **730 SE 19th Avenue, Albany OR 97321**. Representatives of the Contractors will meet with the Owner and Project Manager at the site for review of the project specifications and site walk of the facility.

B. Contractors intending to submit proposals for this project must attend this pre-bid meeting. No other meeting will be held.

1.6 GENERAL STATUTORY PROVISIONS CONCERNING PUBLIC CONTRACTS

A. In accordance with the provisions of Oregon Revised Statues (ORS) 279C.530, it is agreed that the Contractor shall make prompt payment, as due, to all person supplying to the contractor labor or materials for the prosecution of the Work provided for herein, pay all contributions or amounts due the State Industrial Accident Fund from the Contractor incurred in the performance of the contract herein, not permit any lien or claims to be file or prosecuted against the District on account of any labor or material furnished, and to pay the State Tax Commission all sums withheld from employees pursuant to ORS 316.169, ORS 316.189 and ORS 316.167.

B. Pursuant to ORS 279C.515, it is agreed that if the Contractor fails, neglects or refuses to make prompt payment on any claim for labor or services furnished to the Contractor by any persons in connection with this agreement as such claim becomes due, the proper officer of officers representing the District may pay such claim to the person furnishing the labor or service and charge the amount of the payment against the Contractor. The payment of a claim in the manner authorized in this paragraph shall not relieve the Contractor or his surety from obligation with respect to any unpaid claims.

C. Pursuant to ORS 279C.520, it is a condition of this agreement that no person shall be employed by the Contractor for more than eight (8) hours in any one (1) day, or forty hours in any one (1) week, except in cases of necessity, emergency or where the public policy absolutely requires it, and in such cases, the person shall be paid at least time and a half pay for all overtime in excess of eight (8) hours in any one (1) day and for Work performed on Saturdays and legal holidays.

D. Pursuant to ORS 279C.525 the Contractor shall comply with the provisions of all federal, state and local statues, ordinances and regulations dealing with the prevention of environmental pollution and the preservation of natural resources that affect the project.

E. Pursuant to ORS 279C.530, it is an express condition of this agreement that the Contractor shall, promptly, as due, make payment to any person, co-partnership, association or corporation furnishing medical, surgical and hospital care or other needed care and attention, incident to sickness or injury, to the employees of such Contractor, or all sums which the Contractor may or shall have deducted from their wages of his employees for such services pursuant to the terms of ORS 279B.230, and any contract entered into pursuant thereto, or collected or deducted from the wages of its employees pursuant to any law, contract or agreement for the purposes of providing or paying for such service.

F. The hourly rate of wage to be paid by the Contractor (and incorporated in his subcontracts) shall not be less than provided in ORS 279C.800 to ORS 279C.870, and as hereinafter included in Section 00 7343-BOLI Wage Rate Requirements.

G. Pursuant to ORS 645.001 et seq. OAR Chapter 437, Div. 3 and OAR Chapter 437-002-0320 through OAR Chapter 437-002-0325, the Contractor shall comply with the following conditions under any contract to provide the District with goods or services.

1. Contractors and their employees shall comply with the requirements of the above cited Laws, Rules, Policies and Regulations

2. The Contractor shall review the Material Safety Data Sheets filed by the District to determine if there are any chemicals stored at the site of Work which the Contractor or any subcontractors will use, or could be exposed to in an emergency

3. Workers shall inform the executive officer at the location where services are being performed of all hazardous chemicals which they or their sub-contractors bring upon education facility property, and upon request, provide the District with M.S.D.S. for such chemicals

H. Each bid shall identify whether the bidder is an Oregon resident bidder, as defined in ORS 279A.120.

I. Pursuant to ORS 279C.830 (3), the contractor and every subcontractor must have a public works bond filed with the Construction Contractors Board before starting work on the project, unless exempt under ORS 279C.836 (4), (7), (8) or (9).

1.7 BID SECURITY

A. No bid will be considered unless accompanied by a cashier's check or bid bond executed in favor of the District and associated facility for an amount equal to at least ten percent (10%) of the base bid and shall accompany the bid as evidence of good faith and as guarantee that if awarded the contract the bidder will execute the contract and provide a performance bond and payment bond as required. The successful bidder's check or bid bond will be retained until he has entered into a satisfactory contract and furnished a 100% performance bond and payment bond. The Owner reserves the right to hold the bid security as hereinafter noted.

B. The bid bond shall be furnished by a bonding company licensed to do business in the State of Oregon.

C. Should the successful bidder fail to execute and deliver the signed agreement and a satisfactory payment bond and performance bond within ten (10) days after the bid has been accepted by the Owner, the cashiers check or bid bond may be forfeited as liquidated damages at the option of the Owner. The date of acceptance of the bid and the award of the contract as contemplated by the contract documents shall mean the day on which the Owner takes official action in making the award.

1.8 EXECUTION OF THE BID FORM

A. The bid form invites bids on definite drawings and specifications. Only the amounts and information asked for on the bid form furnished will be considered as the bid. Each bidder shall bid upon the Work exactly as specified and provided in the bid form. The bidder shall include in a sum to cover the cost of all items contemplated by the bidding documents.

B. The bid form included in the project manual as Document 00 4100 is the official bid form that will be used in submitting a bid. Only the official bid form may be used in submitting a bid.

C. All blank spaces in the official bid form shall be filled and numbers shall be stated both in writing and in figures. If the bid is made by a partnership, it shall contain the names of each partner and shall be signed in the firm name, followed by the signature of the partner signing for the firm. The address of the bidder shall be typed or printed on the bid form.

D. Bids which are incomplete, or which are conditioned in any way, or which contain erasures or alterations may be rejected.

1.9 SUBMISSION OF BID

A. The bid proposal shall be sealed in an opaque envelope, addressed as follows:

BID PROPOSAL
SUNRISE ELEMENTARY MECHANICAL UPGRADE PROJECT
GREATER ALBANY PUBLIC SCHOOL DISTRICT 8J
C/O HMK COMPANY
403 W FIRST AVENUE, SUITE 7
ALBANY, OREGON 97321
ATTN: KEN GRUENWALD, SR. PROJECT MANAGER

B. Bids will be received up to **2:00 pm**, local time, **November 24, 2020** at the address listed above.

C. Any bid submitted after the scheduled closing time will be returned to the bidder unopened.

1.10 OPENING OF BIDS

A. A public bid opening will be held immediately following the scheduled closing. Each and every bid received prior to the closing time will be publicly opened and read aloud

irrespective of any irregularities or informalities contained in such bids.

1.11 DURATION OF BID PROPOSALS

A. The base bid shall be irrevocable for a period of thirty (30) days from the date and time of bid opening.

B. The base bid may be adjusted for alternate prices and / or unit prices for a period of sixty (60) days from the date and time of bid opening.

1.12 CONTRACT AND BOND

A. Within ten (10) days after receipt of Notice of Award, any bidder to whom a contract is awarded shall execute a formal written contract and shall furnish corporate surety bonds with a surety company satisfactory to the District in an amount equal to the full contract sum based upon the estimated quantities of items covered by the contract for the faithful performance of said contract and all provisions thereof; provided, the formation of said contract shall not be completed and the District shall not be liable thereon until said formal written contract has been executed both by the successful bidder and by the District and a performance bond and a payment bond, properly executed has been delivered and accepted by the District.

B. The cashiers check or bid bond of the bidder with whom a contract is entered into will be returned when said contract has been properly executed by the bidder and said performance and payment bond, properly executed, has been delivered to and accepted by the District. The cashiers check or bid bond to each bidder who was not awarded a contract will be returned promptly after the contract and bond of the successful bidder, properly executed, has been delivered to and accepted by the District.

C. Any bidder to whom a contract is awarded and who shall default in executing said formal written contract or in furnishing a satisfactory performance and payment bond within the time and in the manner required by these specifications shall be liable to the District for whatever damages, including expenses and attorney's fees as may be incurred by the District in recovering to another bidder whether by a single action or by successive actions, shall not operate to release any defaulting bidder from said liability. The parties agree that the cashiers check or bid bond amount is fair determination of the amount of damages which the District would incur as a result of any such failure on the part of the bidder and the full amount will be forfeited as liquidated damages and will not constitute a penalty. In the event competent tribunal finds that this amount does not properly represent an award of liquidated damages, expenses and attorney's fees incurred by the District as a result of the bidder's default, then the final determination of the tribunal shall be deemed to represent the damages, expenses and attorney's fees incurred by the District as a result of the bidder's default.

1.13 SUBSTANTIAL COMPLETION AND LIQUIDATED DAMAGES

A. Substantial Completion shall occur at **5:00 pm on August 20, 2021.**

B Should the building not be ready for occupancy by the time and date listed above, liquidated damages to be paid by the Contractor to the Owner for each calendar day of delay, shall be included in the terms of any contract awarded hereunder in lieu of a penalty. The amount of liquidated damages shall be $1,000.00 per day.

1.14 DISTRICT PERSONNEL EXCLUDED FROM THE CONTRACT

A. No officer, agent or employee of the District shall be permitted any interest in the contract.

1.15 RESERVATIONS

A. The Board of Directors of the District, expressly reserves the following rights:

1. To reject all bids
2. To waive any or all irregularities in bids submitted
3. To consider the responsibility and competency of bidders in making any award
4. In the event two or more bids shall be for the same amount for the same Work, to award the contract by lot or otherwise as it deems appropriate
5. To award contract to one Contractor with the aggregate low bid
6. To reject any bid or bids not in compliance with prescribed bidding procedures and requirements
7. To reject any bid or bids not meeting the specifications set forth herein
8. In the event any bidder to whom a contract is awarded shall default in executing said formal contract or in furnishing a satisfactory performance and payment bond within the time and in the manner herein before specified, to re-award the contract to another bidder.
9. To accept Alternates in any order or combination, and to determine the low Bidder on the basis of the sum of the Base Bid and Alternates accepted.

1.16 ACCEPTANCE OF CONDITIONS

A. Each bidder by submission of a bid assents to each and every term and condition set forth anywhere in these contract documents and agrees to be bound thereby.

1.17 INTERPRETATION UPON CONTRACT DOCUMENTS

A. Only the Board of Directors of the District as represented by the Project Manager has authority to place any interpretation upon the foregoing or annexed contract documents. Any interpretation, either verbal or written, attempted to be placed thereon by any other person will not be binding upon the District.

1.18 EQUAL EMPLOYMENT

A. All bidders shall comply with the Provision of Executive Order 1246 (30 F.R. 12319-25) regarding Equal Employment Opportunity.

1.19 IMMIGRATION REFORM AND CONTROL ACT

A. All bidders shall comply with the provisions of the Immigration Reform and Control Act of 1986 regarding the verification of employment eligibility.

1.20 REFERENCES REQUIREMENTS

A. All bidders shall provide a list of three different project references for projects that the Contractor worked on within the last three years of comparable size and scope. **References must be submitted with the Bid From**.

B. Bidders shall use their own form to supply their list of references. The list of project references shall include the following information:

1. Name of the Project

2. Project description

3. Project location

4. Project date

5. Dollar value of the Project

6. Name of the project contact person

7. Telephone number for contact person

8. Email for contact person

C. The references will be checked to determine if they are supportive of the bidder's ability to meet the requirements of this ITB.

D. The bidder must provide references that can be contacted regarding the quality of workmanship, level of service provided, timeliness of completion, and adherence to specifications.

E. The District reserves the right to choose and investigate any reference whether or not furnished by the bidder, and to investigate past performance of any bidder with respect to its successful performance on similar projects, its completion or delivery of service on schedule, and its lawful payment of suppliers, Subcontractors, and employees.

F. The District may postpone the award or execution of the Contract after the announcement of the apparent successful Contractor in order to complete its investigation. The District may reject a bid if, in the opinion of the District the overall reference responses indicate inadequate performance of the Contractor.

G. The District representative will make three attempts to contact the references from the list provided by the Contractor. If the reference is not contacted after three attempts that reference will be removed from the list and the bid rejected as non-responsive.

H. Each reference contacted shall be asked the same questions, including but not limited to: (1) quality of service; (2) delivery; (3) responsiveness to reported problems, including orders and billing; (4) how well the Contractor met the terms of the contract; and (5) whether or not the reference would choose to hire the Contractor again.

1.21 CRIMINAL HISTORY CHECK / PHOTO ID

A. It is the responsibility of the Contractor to submit the names of all Contractor employees and all Subcontractor employees who will be on the job site for more than one day. These employees shall fill out a criminal history form provided by the District and the Contractor must submit the completed forms to HMK Company (HMKCO). Criminal history checks will be run through the Oregon State Police as provided for in ORS 326.603. The District shall bear the cost of processing such Criminal history checks.

1. Through the signature on the criminal history form, authorization is also given to HMK Company and its representative to investigate this information. Further, with this signature, consent is given to all governmental agencies, public or private companies and individuals to release information regarding the individual to the HMK Company and to their representative. The District shall bear the cost of processing such Criminal history checks.

B. In accordance with ORS 326.603(8) the District is required to terminate the employment or contract status of any individual who refuses to consent to a criminal history check of to be fingerprinted or falsely swears to the non-conviction of any crime.

C. In accordance with ORS 326.603(7)(a) no individual found to have been convicted of any crime listed in ORS 342.143 or of an attempt to commit one of the listed crimes shall be allowed to work on any District site.

1. It is vital that employees are instructed to accurately complete criminal history forms. Crimes listed in ORS 342.143 which automatically bar an individual from employment with or contracting with the District are primarily crimes of violence, crimes against children, and sex related crimes. However, falsely swearing that you have not been convicted of a crime obligates the District to terminate employment or contract status even if the crime is not listed in ORS 342.143.

D. No Employee shall have direct contact with students.

E. All employees working on site for more than one day shall wear a Name and Photo Identification Badge. Any employee on site for less than one day shall wear a visitor badge. Badges shall be the responsibility of the Contractor to provide. Badge shall state the District, name of the project, employee name, and company they represent.

1.22 TOBACCO FREE EDUCATION FACILITY

A. All bidders shall comply with OAR 581.021.0110 and ORS 326.051 regarding Tobacco Use on Public Grounds.

B. For the purpose of this document “tobacco” is defined to include any lighted or unlighted cigarette, cigar, pipe, clove cigarette, and any other smoking product, spit tobacco, also known as smokeless, dip, chew, snuff, in any form, nicotine or nicotine delivering devices, chemicals or devices that produce the physical effect of nicotine substances or any other tobacco substitute (e.g., e-cigarettes). This does not include FDA approved nicotine replacement therapy products used for the purpose of cessation.

C. No employee, sub-contractor, material supplier, or project visitor is permitted to smoke, inhale, dip, or chew or sell tobacco at any time, including non-education hours.

1. In any building, facility; or

2. On education facility grounds, athletic grounds, or parking lots.

END OF SECTION

DATE:_____

LEGAL NAME OF BIDDER:_____

To: Greater Albany Public School District 8J
Board of Directors;
718 Seventh Avenue SW
Albany, Oregon 97321

The Undersigned, having examined the Contract Documents, including the Bidding and Contract Requirements, the General Requirements, the Technical Specifications entitled:

SUNRISE 2021 MECHANICAL UPGRADE PROJECT

As prepared by MFIA, INC. and the Greater Albany Public School District, as well as the premises and conditions affecting the Work, hereby proposes and agrees to perform, within the time stipulated, the Work, including all its component parts, and everything required to be performed, and to provide and furnish all labor, material, tools, expendable equipment, transportation and all other services required to perform the Work and complete in a workmanlike manner ready for use, all as required by and in strict accordance with the Contract Documents for the sums computed as follows:

BASE BIDS:

Sunrise 2021 Mechanical Upgrades Project

_____DOLLARS $_____

which lump sums are hereby designated as BASE BIDS,

ALTERNATES

Provide all labor and materials necessary for the provisions of these alternate prices as referenced in 01 2300

Alternate 1: _____ Dollars $_____

Boiler Room Demolition and Renovation

TIME OF COMPLETION

The Undersigned agrees if awarded the Contract to complete all the Work in an acceptable manner in conformance with the Contract Documents and within the time specified.

ADDITIONAL REQUIREMENTS

1. The Undersigned agrees that the enclosed Bid Guarantee (bid bond, certified or cashier's check) in the amount of ten percent (10%) of the Basic Bid sum made payable to the Owner, shall be kept in escrow with the Owner; that its amount shall be a measure of liquidated damages the Owner will sustain by failure of the Undersigned to execute agreement and furnish bond, and that if the Undersigned fails to deliver the prescribed bond within ten (10) calendar days after receipt of the written notice of award, then the Bid Guarantee shall become the property of the Owner.

2. Should this proposal not be accepted within thirty (30) calendar days after the date and time of bid opening, or if the Undersigned executes Agreement and delivers bond, the Bid Guarantee shall be returned.

3. Contractor's State of Oregon Contractors' License Registration Number.
_____

4. Receipt of Addenda numbered _____ is hereby acknowledged.

5. The undersigned certifies that the Bidder is a _____ Bidder as defined in ORS 279A.120. ("Resident" or "Non-Resident", to be filled in by Bidder)

6. References are to be submitted with Bid Form as per Section 00 2113, 1.20.

SIGNATURES

_____
Legal Name of Bidder's Firm

By:_____ Title:_____

Address:_____ Telephone:_____

Email: _____

State of Incorporation, if Corporation:_____

Names of Partners, if Partnership:

_____ _____

Signed By_____

_____
Printed Name of Bidder / Firm

Bids which are submitted by Bid Closing, but for which a required disclosure submittal has not been made by the specified Disclosure Deadline, are not responsive and shall not be considered for Contract award.

AGENCY SUPPLIED INFORMATION:

PROJECT NAME: **Sunrise 2021 Mechanical Upgrade Project**

BID #: N/A BID CLOSING: Date: **Nov. 24, 2020** Time: **2:00 PM**
REQUIRED DISCLOSURE DEADLINE: Date: **Nov. 24, 2020** Time: **4:00 PM**
Deliver Form To (Agency): HMK Company
Designated Recipient (Person): Ken Gruenwald, Sr. Project Manager
Agency's Address: 403 W First Ave, Suite 7
Albany, Oregon 97321
Email to: ken.gruenwald@hmkco.org

INSTRUCTIONS:

The contracting agency will insert "N/A" below if the contract value is not anticipated to exceed $100,000. Otherwise, this form must be submitted either with the bid or within **TWO (2)** working hours after the advertised bid closing date and time;

FAILURE TO SUBMIT THIS FORM BY THE DISCLOSURE DEADLINE WILL RESULT IN A NON-RESPONSIVE BID. A NON-RESPONSIVE BID WILL NOT BE CONSIDERED FOR AWARD.

It is the responsibility of bidders to submit this disclosure form and any additional sheets, with the bid number and project name clearly marked, and must be submitted at the location specified in the Invitation to Bid on the advertised bid closing date and within two (2) working hours after the advertised bid closing time at the location indicated by the specified disclosure deadline. See "Instructions to Bidders".

List below the name of each subcontractor that will be furnishing labor or materials and that is required to be disclosed, the category of work that the subcontractor will be performing and the dollar value of the subcontract. Enter" NONE" if there are no subcontractors that need to be disclosed. (ATTACH ADDITIONAL SHEETS IF NEEDED).

BIDDER DISCLOSURE:

SUBCONTRACTOR NAME	DOLLAR VALUE	CATEGORY OF WORK
1)		
2)		
3)		
4)		
5)		
6)		

7)		
8)		
9)		
10)		
11)		
12)		
13)		
14)		
15)		
16)		

The above listed first-tier subcontractor(s) are providing labor, or labor and material, with a Dollar Value equal to or greater than:

a) Five percent (5%) of the total Contract Price, but at least $15,000. (If the Dollar Value is less than $15,000, do not list the subcontractor above);

or

b) $350,000 regardless of the percentage of the total Contract Price.

Form Submitted By (Bidder Name): _____

Contact Name: _____

Phone #: _____

Email: _____

END OF SECTION

AGREEMENT made as of the___ day of _____, 2020, between
GREATER ALBANY PUBLIC SCHOOL DISTRICT 8J(hereinafter "the Owner") **and**
_____, (hereinafter "the Contractor").

The Project is:	Sunrise 2021 Mechanical Upgrade Project
The Owner is:	Greater Albany Public School District 8J Russ Allen, Director of Business & Operations 718 Seventh Avenue SW Albany, OR 97321
The Mechanical Engineer is:	Scott Miller, Principal MFIA Inc. 2007 SE Ash Street Portland, Oregon 97214
The Contractor is:	Name, Title Firm Name Firm Address City, OR 97xxx

The Owner and Contractor agree as follows:

ARTICLE 1 THE CONTRACT DOCUMENTS

The Contract Documents consist of this Agreement, the General Conditions of the Contract, any Supplementary, or other Conditions, Drawings, Specifications, Addenda issued prior to execution of this Agreement, other documents listed in this Agreement and Modifications issued after execution of this Agreement; these form the Contract, and are incorporated by this reference herein. The Contract represents the entire and integrated agreement between the parties and supersedes prior negotiations, representations or agreements, either written or oral. An enumeration of the Contract Documents, other than Modifications, appears in Article 8.

ARTICLE 2 THE WORK OF THIS CONTRACT

The Contractor shall fully execute the Work described in the Contract Documents, including such construction activity as is reasonably inferable from the Contract Documents as necessary to produce the results intended by the Contract Documents, except to the extent specifically indicated in the Contract Documents to be the responsibility of others.

ARTICLE 3 DATE OF COMMENCEMENT AND SUBSTANTIAL COMPLETION

3.1 The date of commencement of the Work shall be the date of the date to be fixed in a notice to proceed issued by the Owner, which shall be issued no less than two (2) days prior to the date of commencement.

3.2 The Contract Time shall be measured from the date of commencement.

3.3 The Contractor shall continuously and diligently prosecute the Work and shall achieve Substantial Completion of the entire Work not later than **August 20, 2021**, subject to approved adjustments of this Contract Time as provided in the Contract Documents.

3.4. If the Contractor fails to achieve Substantial Completion of the Work within the Contract Time and as otherwise required by the Contract Documents, the Owner shall be entitled to recover from the Contractor as liquidated damages and not as a penalty $1,000.00 per day which shall commence on the first day following the expiration of the Contract Time and continuing until the date of Substantial Completion. Such liquidated damages are hereby agreed to be a reasonable estimate of the damages the Owner will incur as a result of delay in the completion of the Work. The Owner may deduct any accrued liquidated damages from any unpaid amount due or to become due to the Contractor. Any Liquidated damages not so deducted shall be paid to the Owner upon demand together with interest as provided by Oregon law.

ARTICLE 4 CONTRACT SUM

4.1 The Owner shall pay the Contractor the Contract Sum in current funds for the Contractor's proper and timely performance of the Contract and full and final completion of the Work. The Contract Sum shall be _____ Dollars ($_____). This sum includes all general conditions, profit, overhead and all other amounts due or to become due to the Contractor for the proper and timely performance of the Contract and full and final completion of the Work. The Contract sum is subject to authorized additions and deductions as provided in the Contract Documents.

4.2 PERMITS, FEES AND NOTICES

4.2.1 The Contractor shall secure and pay for:

.1 All pertinent specialty permits. (The owner is securing and paying for the plan review, building permit, and system development fees.)

4.2.2 The Contractor will be responsible for any renewals of and penalties arising from the building permit and from all other permits and governmental or utility fees. The Contractor shall secure and pay for all other permits and governmental fees, licenses and inspections necessary for proper execution and completion of the Work which are customarily secured after execution of the Contract and which are legally required when bids are received or negotiations concluded, including without limitation electrical, sewer, water, and plumbing permits and fees.

4.3 The Contract Sum is based upon the following alternates, if any, which are described in the Contract Documents and are hereby accepted by the Owner:

4.4 Unit prices, if any, are as follows: See Section 00 4100, Bid Form

ARTICLE 5 PAYMENTS

5.1 PROGRESS PAYMENTS

5.1.1 Based upon Applications for Payment which include all the necessary supporting documentation is received by the Owners Delegated Representative, and Owner not later than the first day of the month, and Certificates for Payment are issued by the Owners Delegated Representative, the Owner shall make progress payments on account of the Contract Sum to the Contractor as provided below and elsewhere in the Contract Documents.

5.1.2 The period covered by each Application for Payment shall be one calendar month ending on the last day of the month, or as follows:

5.1.3 Provided that an Application for Payment and all supporting documentation, including all full and unconditional lien waivers related to the Work for which payment is requested is received by the Owners

Delegated Representative and Owner not later than the first day of a month, the Owner shall make payment to the Contractor not later than the last day following the Owners Delegated Representative's approval. If an Application for Payment is received by the Owners Delegated Representative after the application date fixed above, payment shall be as set forth below.

5.1.4 Each Application for Payment shall be based on the most recent schedule of values submitted by the Contractor in accordance with the Contract Documents. The schedule of values shall allocate the entire Contract Sum among the various portions of the Work. The schedule of values shall be prepared in such form and supported by such data to substantiate its accuracy as the Owners Delegated Representative and any Lender may require. This schedule, unless objected to by the Owners Delegated Representative, shall be used as a basis for reviewing the Contractor's Applications for Payment, provided, however, in no instance shall the schedule of values ever exceed the reasonable value of the Work performed.

5.1.5 Applications for Payment shall indicate the percentage of completion of each portion of the Work as of the end of the period covered by the Application for Payment.

5.1.6 Unless otherwise provided in the Owner's agreement with any Lender, and subject to other provisions of the Contract Documents, the amount of each progress payment shall be computed as follows:

.1 Take that portion of the Contract Sum properly allocable to completed Work as determined by multiplying the percentage completion of each portion of the Work by the share of the Contract Sum allocated to that portion of the Work in the schedule of values, less retainage of Five percent (5%). Pending final determination of cost to the Owner of changes in the Work, amounts not in dispute shall be included as provided in Subparagraph 7.3.8 of the General Conditions, or as modified by the parties;

.2 Add that portion of the Contract Sum properly allocable to materials and equipment delivered and suitably stored at the site for subsequent incorporation in the completed construction (or, if approved in advance by the Owner, suitably stored off the site at a location agreed upon in writing), less retainage of five percent (5%);

.3 Subtract the aggregate of 9.5 previous Payments made by the Owner; and

.4 Subtract amounts, if any, for which the Owners Delegated Representative has withheld or nullified a Certificate for Payment as provided in Paragraph 9.5 of the General Conditions.

or as modified by the parties.

5.1.7 The progress payment amount determined in accordance with Subparagraph 5.1.6 shall be further modified under the following circumstances:

.1 Add, upon Substantial Completion of the Work, a sum sufficient to increase the total payments to the full amount of the Contract Sum, less such amounts as the Owners Delegated Representative, any Lender or the Owner shall determine for incomplete Work, retainage applicable to such Work and unsettled claims;

.2 Add, if final completion of the Work is thereafter materially delayed through no fault of the Contractor, any additional amounts payable in accordance with Subparagraph 9.10.3 of the General Conditions.

5.1.8 Reduction or limitation of retainage, if any, shall be as follows:

5.1.9 Except with the Owner's prior written approval, the Contractor shall not make advance payments to suppliers for materials or equipment which have not been delivered and stored at the site.

5.1.10 Contractor shall:

.1 Make payment promptly, as and when due, to all persons supplying to labor, materials, equipment or services;

.2 Pay all contributions or amounts due the Industrial Accident Fund from Contractor or any Subcontractor incurred in the performance of the Work;

.3 Not permit any lien or claim to be filed or prosecuted against the Owner, on account of any labor, materials, equipment or services furnished, supplied or provided;

.4 Pay to the Department of Revenue all sums withheld from employees pursuant to ORS 316.167;

.5 Demonstrate that an employee drug testing program as set forth herein is in place for Contractor and all Subcontractors pursuant to ORS 279C.505;

.6 To the extent that any demolition is included as a part of the Work, salvage or recycle construction and demolition debris, if feasible and cost-effective;

.7 To the extent that any lawn or landscape maintenance is included as a part of the Work, compost or mulch yard waste material at an approved site, if feasible and cost-effective.

5.1.11 If the Contractor fails, neglects or refuses to make prompt payment of any claim for labor or services furnished to the Contractor or any Subcontractor by any person in connection with the Work as such claim becomes due, the proper officer or officers representing the Owner may pay such claim to the person furnishing the labor or services and charge the amount of the payment against funds due or to become due the Contractor by reason of this Agreement.

5.1.12 If the Contractor or a first-tier Subcontractor fails, neglects or refuses to make payment to a person furnishing labor or materials in connection with the Work within 30 days after receipt of payment from the Owner or the Contractor, the Contractor or first-tier Subcontractor shall owe the person the amount due plus interest charges commencing at the end of the 10-day period that payment is due under ORS 279C.505 and 279C.580 and ending upon final payment, unless payment is subject to a good faith dispute as defined in ORS 279C.505 and 279C.580. The rate of interest charged to the Contractor or first-tier Subcontractor on the amount due shall equal three times the discount rate on 90-day commercial paper in effect at the Federal Reserve Bank in the Federal Reserve district that includes Oregon on the date that is 30 days after the date when payment was received from the Owner or from the Contractor, but the rate of interest shall not exceed 30 percent. The amount of interest may not be waived.

5.1.13 If the Contractor or a Subcontractor fails neglects or refuses to make payment to a person furnishing labor or materials in connection with the Work, the person may file a complaint with the Construction Contractors Board, unless payment is subject to a good faith dispute as defined in ORS 279C.505 and 279C.580.

5.1.14 The payment of a claim in the manner authorized in this Agreement shall not relieve the Contractor or the Contractor's surety from obligation with respect to any unpaid claims.

5.1.15 No person shall be employed by the Contractor or any Subcontractors, which are subject to the statutory limitations of Oregon law for more than ten (10) hours in any one (1) day, or 40 hours in any one

(1) week, except in cases of necessity, emergency, or where the public policy absolutely requires it, and in such cases, the employee shall be paid at least time and a half pay:

.1 For all overtime in excess of eight (8) hours a day or 40 hours in any one (1) week when the work week is five (5) consecutive days, Monday through Friday; or

.2 For all overtime in excess of ten (10) hours a day or 40 hours in any one (1) week when the work week is four (4) consecutive days, Monday through Friday; and

.3 For all Work performed on Saturday and on any legal holiday specified in ORS 279.334.

5.1.16 The Contractor shall give notice to employees in writing, either at the time of hire or before commencement of Work on the Project, or by posting a notice in a location frequented by employees, of the number of hours per day and days per week that the employees may be required to work. The Contractor shall include an identical provision in its subcontracts and require all Subcontractors, of any tier, to include an identical provision in all subcontracts.

5.1.17 The Contractor shall promptly, as and when due, make payment to any person, co-partnership, association or corporation, furnishing medical, surgical and hospital care or other needed care and attention, incident to sickness or injury, to the employees of the Contractor, of all sums which the Contractor agrees to pay for such services and all moneys and sums which Contractor collected or deducted from the wages of employees pursuant to any law, contract or agreement for the purpose of providing or paying for such service.

5.1.18 Every Subcontractor will comply with ORS 656.017, unless it is an exempt employer under ORS 656.126.

5.1.19 The Contractor is not a contributing member to the Public Employees' Retirement System and will be responsible for any and all federal, state and local taxes applicable to payments received under this Agreement. The Contractor will not be eligible for any benefits from these contract payments of federal Social Security, employment insurance, Workers' Compensation or the Public Employees' Retirement System.

5.1.20 The hourly rate of wage to be paid by the Contractor or every Subcontractor subject to prevailing wage rates to workers, shall be not less than the prevailing rate of wage for an hour's work in the same trade or occupation in the locality where such labor is performed.

5.1.21 The Contractor and every Subcontractor subject to prevailing wage rates to employees shall keep the prevailing wage rates for that project posted in a conspicuous and accessible place in or about the project.

5.1.22 The Contractor and every Subcontractor subject to prevailing wage rates to employees and shall also provide for or contribute to a health and welfare plan or a pension plan, or both, for its employees on the Project and shall post notice describing such plans in a conspicuous and accessible place in or about the Project. The notice preferably shall be posted in the same place as the notice required under 5.1.16. In addition to the description of the plans, the notice shall contain information on how and where to make claims and where to obtain further information.

5.1.23 The Contractor represents and agrees that the specifications contain a sufficient provision stating the existing prevailing rate of wage which must be paid to workers in each trade or occupation required for such public work employed in the performance of the Work either by the Contractor or any Subcontractor or other person doing or contracting to do the whole or any part of the Work contemplated by the contract. Such workers shall be paid not less than such specified minimum hourly rate of wage.

5.1.24 The District represents and agrees that the specifications contain a sufficient provision stating that a fee is required to be paid to the Commissioner of the Bureau of Labor and Industries as provided in ORS 279C.825. The fee shall be paid to the commissioner pursuant to the administrative rule of the commissioner.

5.1.25 The Contractor or the Contractor's surety and every Subcontractor or Subcontractor's surety subject to prevailing wage rates shall file certified statements with the Owner in writing in the form prescribed by the Commissioner of the Bureau of Labor and Industries, certifying the hourly rate of wage paid each worker which Contractor or the Subcontractor has employed upon such public work, and further certifying that no worker employed upon such public work has been paid less than the prevailing rate of wage or less than the minimum hourly rate of wage specified in the contract, which certificate and statement shall be verified by the oath of Contractor or the Contractor's surety or Subcontractor or the Subcontractor's surety that the Contractor or Subcontractor has read such statement and certificate and knows the contents thereof and that the same is true to the Contractor's or subcontractor's knowledge. The certified statements shall set out accurately and completely the payroll records for the prior week including the name and address of each worker, the worker's correct classification, rate of pay, daily and weekly number of hours worked, deductions made and actual wages paid. Each certified statement required shall be delivered or mailed by Contractor or the Subcontractor to the public contracting agency. Certified statements for each week, during which the Contractor or the Subcontractor employs a worker upon the Project shall be submitted once a month, by the fifth (5th) business day of the following month.

5.1.26 The Contractor or Subcontractor shall preserve the certified statements for a period of three (3) years from the date of completion of the contract.

5.1.27 Per ORS 279C.855, the Contractor represents and agrees that the Owner has fully and timely included a provision in the Contract Documents that the Contractor and any Subcontractor shall comply with ORS 279C.840 in the invitation for bids, the request for bids, the contract specifications, the accepted bid or elsewhere in the Contract Documents and that the Owner has no liability for unpaid minimum wages.

5.1.28 Owner shall make progress payments on the contract monthly as Work progresses. Payments shall be based upon estimates of Work completed that are approved by the Owner. A progress payment shall not be considered acceptance or approval of any Work or waiver of any defects therein. In instances when an invoice is filled out incorrectly, or when there is any defect or impropriety in any submitted invoice or when there is a good faith dispute, the Owner shall so notify the Contractor within 15 days stating the reason or reasons the invoice is defective or improper or the reasons for the dispute. A defective or improper invoice, if corrected by the Contractor within seven days of being notified by the Owner, shall not cause a payment to be made later than specified in this section.

5.1.29 If requested in writing by a first-tier Subcontractor, Contractor, within ten (10) calendar days after receiving the request, shall send to the first-tier Subcontractor a copy of that portion of any invoice, request for payment submitted to the Owner or pay document provided by the Owner to the Contractor specifically related to any labor or materials supplied by the first-tier Subcontractor.

5.1.30 Payment of interest may be postponed when payment on the principal is delayed because of disagreement between Owner and Contractor.

5.1.31 The Owner may reserve as retainage from any progress payment an amount not to exceed five percent of the payment. As Work progresses, the Owner may in its sole discretion reduce the amount of the retainage and the Owner may in its sole discretion eliminate retainage on any remaining monthly contract payments after 50 percent of the Work under the contract is completed if, in the Owner's sole opinion, such Work is progressing satisfactorily. Elimination or reduction of retainage shall be allowed only upon written application by the Contractor, which application shall include written approval of the Contractor's surety; except that when the contract Work is 97-1/2 percent completed the Owner may, at its

discretion and without application by the Contractor, reduce the retained amount to 100 percent of the value of the Work remaining to be done. Upon receipt of a written application by the Contractor, the Owner shall respond in writing within a reasonable time.

5.1.32 The retainage held by the Owner shall be included in and paid to the Contractor as part of the final payment of the contract price. The Contractor shall notify the Owner in writing when the Contractor considers the Work complete and the Owner shall, within 15 days after receiving the written notice, either accept the Work or notify the Contractor of Work yet to be performed on the contract.

5.1.33 The Contractor shall not request payment from the Owner of any amount withheld or retained in accordance herewith.

5.1.34 Such time as the Contractor has determined and certified to the Owner that the Subcontractor is entitled to the payment of such amount. A dispute between the Contractor and a first-tier Subcontractor relating to the amount or entitlement of a first-tier Subcontractor to a payment or a late payment interest penalty under a clause included in the subcontract pursuant to the terms hereof does not constitute a dispute to which the Owner is a party. The Owner shall not be included as a party in any administrative or judicial proceeding involving such a dispute. The Contractor shall include in each subcontract for property

or services entered into by the Contractor and a first-tier Subcontractor, including a material supplier, for the purpose of performing a construction contract:

.1 A payment clause that obligates the Contractor to pay the first-tier Subcontractor for satisfactory performance under its subcontract within ten (10) days out of such amounts as are paid to the Contractor by the Owner under such contract; and

.2 An interest penalty clause that obligates the Contractor, if payment is not made within 30 days after receipt of payment from the Owner, to pay to the first-tier Subcontractor an interest penalty on amounts due in the case of each payment not made in accordance with the payment clause included in the subcontract pursuant to subparagraph .1 of this 5.1.34. The Contractor or first-tier Subcontractor shall not be obligated to pay an interest penalty if the only reason that the Contractor or first-tier Subcontractor did not make payment when payment was due is that the Contractor or first-tier Subcontractor did not receive payment from the Owner or the Contractor when payment was due. The interest penalty shall be:

(A) For the period beginning on the day after the required payment date and ending on the date on which payment of the amount due is made; and

(B) Computed at the rate specified in ORS 279C.515(2).

5.1.35 The Contractor shall include in each of its subcontracts, for the purpose of performance of such contract condition, a provision requiring the first-tier Subcontractor to include a payment clause and an interest penalty clause conforming to the standards of 5.1.33 in each of its subcontracts and to require each of its Subcontractors to include such clauses in their subcontracts with each lower-tier Subcontractor or supplier.

5.1.36 If the Contractor is an employer, the Contractor is a subject employer under Oregon's Workers' Compensation Law and shall comply with ORS 656.017 and shall provide Workers' Compensation coverage for all their "subject workers" as defined in ORS Chapter 656.

5.1.37 The Contractor and all Subcontractors subject to licensing with the Oregon Construction Contractors Board shall be duly licensed therewith at the time they bid any Work, enter into any contract to perform any Work, perform any Work and at all times under which any warranty or repair obligation applies. The

Contractor and all Subcontractors performing any Work which requires any other governmental licensing, such as those with the Elevator and Electrical Board, Plumbing Board or Landscape Contractors Board, shall be duly licensed with all appropriate governmental agencies at the time they bid any Work, enter into any contract to perform any Work, perform any Work and at all times under which any warranty or repair obligation applies.

5.1.38 If federal funds are involved, federal laws, rules and regulations applicable to the grant shall govern in the event they conflict with any provision of this Agreement or other required by law. The Contractor certifies that it is not currently employed by the federal government. This provision does not preclude the Contractor from holding another contract with the federal government.

5.1.39 The Contractor shall timely provide the Owner its name, address, social security, federal employee identification number and such other information as the Department of Revenue may require or request.

5.1.40 The Contractor shall comply and require all Subcontractors to comply with the applicable requirements of all laws, codes, ordinances, regulations and statutes, including but not limited to those in ORS Chapters 279A, B and C. To the extent that ORS Chapters 279A, B and C, or any other law, code, ordinance or regulations, requires any tender or condition to be included in this Agreement, such tender or condition is hereby incorporated by this reference. Nothing contained herein shall be construed so as to require the commission of any act contrary to law, code, rule, statute, ordinance or regulation, and wherever there is any conflict between any provisions contained herein and any statute, law, code, ordinance, rule or regulation the provision of this Agreement which is affected shall be curtailed and limited only to the extent necessary to bring it within the requirements of the law, code, rule, statute, ordinance or regulation.

5.1.41 If the Contractor is a foreign Contractor and the contract price exceeds $10,000, the Contractor shall promptly report to the Department of Revenue on forms to be provided by the Department of Revenue the total contract price, terms of payment, length of contract and such other information as the Department of Revenue may require before final payment can be received on the public contract. For purposes of this A.3 I, a foreign Contractor is one who is not domiciled in or registered to do business in the State of Oregon.

5.1.42 The Contractor represents and agrees that the bid documents make sufficient specific reference to federal, state and local agencies that have enacted ordinances or regulations dealing with the prevention of environmental pollution and the preservation of natural resources that affect the performance of the contract and have allocated all known environmental and natural resource risks to the Contractor by listing such environmental and natural resource risks with specificity in the bid documents.

5.1.43 The Contractor shall not discriminate against minority, women or emerging small business enterprises in the awarding of subcontracts. The Contractor shall certify that the Contractor has not and will not discriminate against minority, women, or emerging small business enterprises in obtaining any required subcontracts.

5.1.44 The Contractor shall use recyclable products to the maximum extent economically feasible in the performance of the Contract Work set forth in this document.

5.1.45 As referenced herein, an employee drug testing policy shall be as follows:

.1 The Contractor or Subcontractor shall have in place at the time of the execution of this Contract, and shall maintain during the term of this Contract, a Qualifying Employee Drug Testing Program for its employees that includes, at a minimum, the following:

(A) A written employee drug testing policy;

(B) Required drug testing for all new Subject Employees or, alternatively, required testing of all Subject Employees every 12 months on a random selection basis; and

(C) Required testing of a Subject Employee when the Contractor or Subcontractor has reasonable cause to believe the Subject Employee is under the influence of drugs.

A drug testing program that meets the above requirements will be deemed a "Qualifying Employee Drug Testing Program." For the purposes of this section an employee is a "Subject Employee" only if that employee will be working on the Project job site.

.2 The Contractor shall require each Subcontractor providing labor for the Project to:

(A) Demonstrate to the Contractor that it has a Qualifying Employee Drug Testing Program for the Subcontractor's Subject Employees, and represent and warrant to the Contractor that the Qualifying Employee Drug Testing Program is in place at the time of subcontract execution and will continue in full force and effect for the duration of the subcontract; or

(B) Require that the Subcontractor's Subject Employees participate in Contractor's Qualifying Employee Drug Testing Program for the duration of the subcontract.

5.2 FINAL PAYMENT

5.2.1 Final payment, constituting the entire unpaid balance of the Contract Sum, shall be made by the Owner to the Contractor when:

.1 A final Certificate for Payment has been issued by the Owners Delegated Representative.

5.2.2 The Owner's final payment to the Contractor shall be made no later than 30 days after the issuance of the Owners Delegated Representative's final Certificate for Payment.

ARTICLE 6 TERMINATION OR SUSPENSION

6.1 The Contract may be terminated by the Owner or the Contractor as provided in Article 14 of the General Conditions.

6.2 The Work may be suspended by the Owner as provided in Article 14 of the General Conditions.

6.3 The Owner shall, in addition to the Right to Stop the Work, have the right to require that the Contractor replace or remove construction personnel assigned to the Work, if, in the Owner’s sole determination, specific construction personnel are impairing or impeding the prosecution of the Work.

ARTICLE 7 MISCELLANEOUS PROVISIONS

7.1 Where reference is made in this Agreement to a provision of the General Conditions or another Contract Document, the reference refers to that provision as amended or supplemented by other provisions of the Contract Documents.

7.2 Payments due and unpaid under the Contract shall bear interest from the date payment is due at the rate stated below, or in the absence thereof, at the legal rate prevailing from time to time at the place where the Project is located.

7.3 The Owner's representative is: Ken Gruenwald, Sr. Project Manager, HMK Company. The Owner may change this representative at any time.

7.4 The Contractor's Representative is: _____.

7.5 Neither the Owner's nor the Contractor's Representative shall be changed without ten (10) days written notice to the other party.

7.6 CONTRACTOR'S CONSTRUCTION SCHEDULES

7.6.1 Within ten (10) days after issuance of the Notice to Proceed, the Contractor shall submit a preliminary schedule of the Work. Within 30 days after issuance of the Notice to Proceed, and before any progress payment need be made, the Contractor, after consultations with its Subcontractors and Suppliers of any tier, shall submit six copies of a Contractor's Construction Schedule to the Owners Delegated Representative and one copy to the Owner. Not less than ten percent of the Progress Payment may be withheld until a Contractor's Construction Schedule in a form satisfactory to the Owners Delegated Representative and Owner has been submitted. Neither the Owner nor the Owners Delegated Representative will review the substance of the Contractor's Construction Schedule.

7.6.2 The Contractor's Construction Schedule shall be based upon a critical path method ("CPM") analysis of construction activities and sequence of operations needed for the orderly performance and completion of all separable parts of the Work in accordance with the Contract and within the Contract Time. The schedule shall be a critical path method type in the form of a precedence diagram and activity listing and shall be time-scaled. It shall include the Notice to Proceed date, the Date(s) of Substantial Completion, and the Date(s) of Final Completion in accordance with the Contract Documents. The Critical Path shall be clearly indicated on the Contractor's Construction Schedule. No more than 20% of the progress activities shall be on the critical path, and no more than 30% shall have less than five days of float. The value of any single activity shall not exceed $50,000, except that 5% of the total activities may exceed this limit without prior approval. The time-scaled network diagram shall be summarized on a single sheet not to exceed 11"x 17".

7.6.2.1 The network diagram shall show in detail and in order the sequence of all significant activities, their descriptions, start and finish dates, durations and dependencies, necessary to complete all Work and any separable parts thereof. The activity listing shall show the following information for each activity on the network diagram:

.1 Description;

.2 Duration (not to exceed fifteen working days);

.3 Craft;

.4 Equipment (including hours of usage);

.5 Start and finish dates;

.6 Total float time and free float time;

.7 Dates that work must be performed and completed by other Contractors or Subcontractors to support the Work and the interfaces with such other Contractors; and

.8 Cost-loading, correlated to the Schedule of Values, which, upon approval, shall be used as a basis for determining action on progress payments throughout the Project.

7.6.2.2 A schedule for the purchase and receipt of items required for performance of the Work, showing lead times between purchase order placement and delivery dates, shall be integrated with the Contractor's Construction Schedule. The Contractor shall furnish the Owners Delegated Representative with copies of all purchase orders and acknowledgments and fabrication, production, and shipping schedules for all major items on the critical path within ten days of the Contractor's receipt of each purchase order, acknowledgment or schedule. Neither the Owners Delegated Representative nor the Owner shall be deemed to have approved or accepted any such material, or its schedule, nor deemed to have waived this requirement if some or all of the material is not received.

7.6.2.3 Milestone completion dates shall be clearly defined on the Contractor's Construction Schedule.

7.6.2.4 If abbreviations are used in the Contractor's Construction Schedule, a legend shall be provided to define all abbreviations.

7.6.2.5 The Contractor shall prepare and keep current a schedule of submittals, coordinated with the Contractor's Construction Schedule, which allows the Owners Delegated Representative at least ten (10) days to review the submittals.

7.6.2.6 The Progress Schedules shall be submitted as both a paper copy and in electronic format using the latest version of Microsoft Project. The Contractor may request to use different project management software, such as, Suretrak, but must first receive approval from the Owner, by demonstrating its capabilities. This can be accomplished by submitting a sample CPM printout of similar scope. If the alternative software is accepted, the Contractor will be required to supply the Owner an authorized copy of the software with all user support manuals.

7.6.2.7 At each monthly meeting with the Owner, the Contractor shall submit (a) a bar chart schedule showing the activities planned for the next month, and (b) a report showing actual starts and finishes from the previous month. The bar-chart schedule shall show all Work activities numbered according to the CPM, any submittal or delivery activities with less than five (5) days, one (1) float, and any permitting, testing, or inspection activities by others.

7.6.3 Within ten days after receipt by the Owners Delegated Representative, two copies of the Contractor's Construction Schedule will be returned to the Contractor with comments, following review by the Owner. Review by the Owner and Owners Delegated Representative of the Contractor's Construction Schedule shall not constitute an approval or acceptance of the Contractor's construction means, methods, or sequencing, or its ability to complete the Work in a timely manner.

7.6.4 The Contractor shall utilize and comply with the Contractor's Construction Schedule. The Contractor shall not be entitled to any adjustment in the Contract Time, the Contractor's Construction Schedule, or the Contract Sum, or to any additional payment of any sort by reason of the loss or use of any float time, including time between the Contractor’s anticipated completion date and end of the Contract Time, whether or not the float time is described as such on the Contractor’s Construction Schedule.

7.6.5 Should the Contractor fail to meet any scheduled date as shown on the current Contractor's Construction Schedule, the Contractor shall, if requested, be required at its own expense to submit within ten days of the request an updated Contractor's Construction Schedule. If the Contractor's progress indicates to the Owner that the Work will not be Substantially Completed within the Contract Time, the

Contractor shall, at its own expense, increase its work force and / or working hours to bring the actual completion dates of the activities into conformance with the Contractor's Construction Schedule and Substantial Completion within the Contract Time. The Contractor shall also submit a revised Contractor's Construction Schedule at its own expense within ten days of notice from the Owners Delegated Representative that the sequence of Work varies significantly from that shown on the Contractor's Construction Schedule. Neither the Owner nor the Owners Delegated Representative will, however, review the substance or sequence of the Contractor's Construction Schedule.

7.6.6 Schedule Float Utilization. Float belongs to the benefit of the Project for the Owner's use and no float shall be used without the Owner's written approval. Any float time to activities not on the critical path shall be used by the Contractor to optimize its construction process. Any float time between the end of the final construction activity and the final completion date shall be used by the Owner in determining if additional contract days are to be awarded for changes in the contract or for delays to the contract caused by the Owner. The Contractor will not be entitled to any adjustment in the Contract Time, the Construction Schedule, or the Contract Sum, or to any additional payment of any sort by reason of the Owner's use of float time between the end of the final construction activity and the final completion date.

7.6.7 Delays. The Contractor shall, within seven days of the event, notify the Owner and Owners Delegated Representative in writing of any proposed changes in the Contractor's Construction Schedule or the Contract Time and of any event which could delay performance or supplying of any item of the Work and shall indicate the expected duration of the delay, the anticipated effect of the delay on the Contractor's Construction Schedule, and the action being taken to correct the delay situation. In the event the Contractor is entitled to a change in the Contract Time, the adjustment to the Contract Time shall be limited to the change in the critical path of construction activities.

7.6.8 Final Completion. The Contractor shall attain Final Completion of the Work in accordance with the Contract within 60 days after the date of Substantial Completion.

7.6.9 Meetings. During the period commencing with the issuance of Notice to Proceed and ending with the date of Final Completion of the Work, the Contractor shall attend and participate in and ensure applicable Subcontractors of any tier and Suppliers attend and participate in:

.1 A pre-contract meeting;

.2 A pre-construction meeting;

.3 Regular weekly Project status meetings scheduled by the Owner or by the Owners Delegated Representative to review progress of the Work, to discuss the Contractor's progress reports, to obtain necessary Owner's or Owners Delegated Representative's approvals, and generally to keep the Owner and Owners Delegated Representative informed and involved in the progress of the Project; and

.4 Regular on-site meetings scheduled by the Owner or by the Owners Delegated Representative to review progress of the Work and other pertinent matters.

7.7 Any and all references to "Engineer" or "the Engineer" in this Agreement or in the General Conditions of the Contract shall be deemed for all purposes to mean and refer to: Owners Delegated Representative.

7.8 If any provision of this Agreement or application thereof to any extent shall be invalid or unenforceable the remainder of the Agreement or its application thereof shall not be affected thereby and the provision or application shall be enforced to the fullest extent permitted by law.

7.9 The Contractor shall not assign this Agreement without the prior written permission of the Owner. Contractor shall assign to Owner any and all rights that the Contractor now has or hereafter may acquire pursuant to a contract related to the Project which rights the Owner shall thereafter be entitled to assign to another person or entity including without limitation any Lender, upon the request of the Owner, provided, however, until the exercise of such rights of assignment by the Owner, there shall be no privity or contractual relationship between the Owner and such persons and entities. The Contractor hereby consents to the free assignment of this Agreement in whole or in part by the Owner to any other person or entity including but not limited to any Lender.

7.10 The Contractor represents and warrants to the Owner who relies thereon as follows:

7.10.1 It and all of its Subcontractors are financially solvent, able to pay debts as they become due and have sufficient working capital to timely perform and complete all obligations related to the Project.

7.10.2 That it is able to timely and completely furnish all the labor, material, equipment and services to necessary to fully complete the Work within the Contract Time.

7.10.3 It and all of its Subcontractors are duly and properly licensed with the Oregon Construction Contractors Board and all other governmental agencies and are signatories to collective bargaining agreements.

7.10.4 It has visited the site, undertaken any and all tests it deems advisable, is familiar with the structure and that it is unaware of any potential condition with would increase the Contract Sum or Contract Time.

7.10.5 It and all of its Subcontractors possess a high level of experience and expertise in projects similar to the Project.

7.10.6 Neither Contractor nor any of its Subcontractors are "exempt" from the requirement to provide Workers' Compensation Insurance under Oregon law.

7.10.7 It is fully authorized to execute this Agreement and perform all the obligations required of it hereunder.

7.11 The representations and warranties of 7.11 are in addition to and not in lieu of any other obligation or law and survive the execution of this Agreement and final completion of the Project.

ARTICLE 8 ENUMERATION OF CONTRACT DOCUMENTS

8.1 The Contract Documents, except for Modifications issued after execution of this Agreement, are enumerated as follows:

8.1.1 This Agreement.

8.1.2 The General Conditions.

8.1.3 The Supplementary and other Conditions of the Contract.

8.1.4 The Specifications are those contained in the Project Manual dated October 26, 2020.

8.1.5 The Drawings are bound in the project manual.

8.1.6 The Addenda, if any, are as follows:

Portions of Addenda relating to bidding requirements are not part of the Contract Documents unless the bidding requirements are also enumerated in this Article 8.

8.1.7 Other documents, if any, forming part of the Contract Documents are as follows:

a. Exhibits _____

This Agreement is entered into as of the day and year first written above and is executed in at least three original copies, of which one is to be delivered to the Contractor, one to the Owners Delegated Representative for use in the administration of the Contract, and the remainder to the Owner.

CONTRACTOR		**GREATER ALBANY PUBLIC SCHOOL DISTRICT 8J**	
By:	_____	**By:**	_____
			Russ Allen
Title:	_____	**Title:**	**Director of Business and Operations**
Date:	_____	**Date:**	_____
Federal ID #:	_____		

ARTICLE 1 GENERAL PROVISION

1.1 BASIC DEFINITIONS

1.1.1 THE CONTRACT DOCUMENTS

The Contract Documents consist of the Agreement between Owner and Contractor (hereinafter the Agreement), the Request for Bids or Proposals. Conditions of the Contract (General, Supplementary and other Conditions), Drawings, Specifications, and Addenda issued prior to execution of the Contract, other documents listed in the Agreement and Modifications issued after execution of the Contract. A Modification is (1) a written amendment to the Contract signed by both parties, (2) a Change Order, (3) a Construction Change Directive or (4) a written order for a minor change in the Work issued by the Consultant. Contractor acknowledges and represents that it has examined all Contract Documents and will examine all Contract Documents created after execution of the Agreement. Contractor represents that such Contract Documents are suitable and sufficient to enable Contractor to timely complete the Work for the Contract Sum within the Contract Time.

1.1.2 THE CONTRACT

The Contract Documents form the Contract for Construction. The Contract represents the entire and integrated agreement between the parties hereto and supersedes prior negotiations, representations or agreements, either written or oral. The Contract may be amended or modified only by a Modification. The Contract Documents shall not be construed to create a contractual relationship of any kind (1) between the Consultant and Contractor, (2) between the Owner and any Subcontractor, including, but not limited to, any Sub-subcontractor, (3) between the Owner and Consultant or (4) between any persons or entities other than the Owner and Contractor. The Consultant shall, however, be entitled to performance and enforcement of obligations under the Contract intended to facilitate performance of the Consultant's duties.

1.1.3 THE WORK

The term "Work" means the construction and services required by the Contract Documents, whether completed or partially completed, and includes any and all labor (including, but not limited to, supervision and management), transportation, materials, equipment and services provided or to be provided by the Contractor to timely fulfill the Contractor's obligations and render the Project complete and usable for its intended purpose. The Work includes all labor, material, equipment and services incidental to or which may be inferred from any of the Contract Documents. The Work may constitute the whole or a part of the Project.

1.1.4 THE PROJECT

The Project is the total construction of which the Work performed under the Contract Documents may be the whole or a part and which may include construction by the Owner or by separate contractors.

1.1.5 THE DRAWINGS

The Drawings are the graphic and pictorial portions of the Contract Documents showing the design, location and dimensions of the Work, generally including plans, elevations, sections, details, schedules and diagrams.

1.1.6 THE SPECIFICATIONS

The Specifications are that portion of the Contract Documents consisting of the written requirements for materials, equipment, systems, standards and workmanship for the Work, and performance of related services.

1.1.7 THE PROJECT MANUAL

The Project Manual is a volume assembled for the Work which may include the bidding requirements, sample forms, Conditions of the Contract and Specifications.

1.2 CORRELATION AND INTENT OF THE CONTRACT DOCUMENTS

1.2.1 The intent of the Contract Documents is to include all items necessary for the proper execution and completion of the Work by the Contractor. The Contract Documents are complementary, and what is required by one shall be as binding as if required by all; performance by the Contractor shall be required only to the extent consistent with the Contract Documents and reasonably inferable from them as being necessary to produce the indicated results. In case of any conflict in the requirements of the Contract Documents, the Contractor is deemed to have included the better Quality and larger Quantity of the Work.

1.2.2 Organization of the Specifications into divisions, sections and articles, and arrangement of Drawings shall not control the Contractor in dividing the Work among Subcontractors or in establishing the extent of Work to be performed by any trade.

1.2.3 Unless otherwise stated in the Contract Documents, words which have well-known technical or construction industry meanings are used in the Contract Documents in accordance with such recognized meanings.

1.3 CAPITALIZATION

1.3.1 Terms capitalized in these General Conditions include those which are (1) specifically defined, (2) the titles of numbered articles and identified references to Paragraphs, Subparagraphs and Clauses in the document or (3) the titles of other documents.

1.4 INTERPRETATION

1.4.1 In the interest of brevity the Contract Documents frequently omit modifying words such as "all" and "any" and articles such as "the" and "an," but the fact that a modifier or an article is absent from one statement and appears in another is not intended to affect the interpretation of either statement.

1.5 EXECUTION OF CONTRACT DOCUMENTS

1.5.1 The Contract Documents shall be signed by the Owner and Contractor. If either the Owner or Contractor or both do not sign all the Contract Documents, the Consultant shall identify such unsigned Documents upon request.

1.5.2 Execution of the Agreement by the Contractor is a representation that the Contractor has visited the site, become fully familiar with the nature, location and character of the site and surrounding areas, weather conditions, availability of labor, materials, equipment and services, site conditions, surface conditions, subsurface conditions, the Contract Documents, existing local conditions under which the Work is to be performed, the time period for performance and completion of the Work. Contractor represents that it has performed personal observations and correlated the observations with the requirements of the Contract Documents such that the Contractor is not aware of any discrepancies, omissions, ambiguities or conflicts in or among any of the Contract Documents.

1.6 OWNERSHIP AND USE OF DRAWINGS, SPECIFICATIONS AND OTHER INSTRUMENTS OF SERVICE

1.6.1 The Drawings, Specifications and other documents, including any in electronic form, prepared by the Consultant and the Consultant's consultants are documents through which the Work to be executed by the Contractor is described. The Contractor may retain one record set. Neither the Contractor nor any

Subcontractor, including, but not limited to, any Sub-subcontractor or material or equipment supplier shall own or claim any intellectual property rights in the Drawings, Specifications and other documents prepared by the Consultant or the Consultant's consultants. All copies of the documents, except the Contractor's record set, shall be returned or suitably accounted for to the Consultant, on request, upon completion of the Work. The Drawings, Specifications and other documents prepared by the Consultant and the Consultant's consultants, and copies thereof furnished to the Contractor, are for use solely with respect to this Project. They are not to be used by the Contractor or any Subcontractor, including, but not limited to, any Sub-subcontractor or material or equipment supplier on other projects or for additions to this Project outside the scope of the Work without the specific written consent of the Owner, Consultant and the Consultant's consultants. The Contractor, Subcontractors, including, but not limited to, any Sub-subcontractors and material or equipment suppliers are authorized to use and reproduce applicable portions of the Drawings, Specifications and other documents prepared by the Consultant and the Consultant's consultants appropriate to and for use in the execution of their Work under the Contract Documents only. All copies made under this authorization shall bear the statutory copyright notice, if any, shown on the Drawings, Specifications and other documents prepared by the Consultant and the Consultant's consultants. Submittal or distribution to meet official regulatory requirements or for other purposes in connection with this Project is not to be construed as publication in derogation of the any intellectual property right or other reserved rights.

ARTICLE 2 OWNER

2.1 GENERAL

2.1.1 The Owner is the entity identified as such in the Agreement and is referred to throughout the Contract Documents. The Owner may designate in writing a representative who subject to the limitations provided by law, shall have express authority to bind the Owner with respect to all matters requiring the Owner's approval or authorization. Except as otherwise provided in Subparagraph 4.1, the Consultant does not have such authority. The term "Owner" means the Owner or the Owner's Authorized Representative.

2.2 INFORMATION AND SERVICES REQUIRED OF THE OWNER

2.2.1 Except for permits and fees, including those required under Subparagraph 3.7, which are the responsibility of the Contractor under the Contract Documents, the Owner shall secure and pay for necessary approvals, easements, assessments and charges required for construction, use or occupancy of permanent structures or for permanent changes in existing facilities.

2.3 OWNER'S RIGHT TO STOP THE WORK

2.3.1 If the Contractor fails to correct Work which is not in accordance with the requirements of the Contract Documents as required by Paragraph 1.1.3, or persistently fails to carry out Work in accordance with the Contract Documents, the Owner may issue a written order to the Contractor to stop the Work, or any portion thereof, until the cause for such order has been eliminated; however, the right of the Owner to stop the Work shall not give rise to a duty on the part of the Owner to exercise this right for the benefit of the Contractor or any other person or entity, nor give rise to any claim for additions to the Contract Sum or Contract Time.

2.3.2 The Owner shall, in addition to the Right to Stop the Work, have the right to require that the Contractor replace or remove construction personnel assigned to the Work, if, in the Owner’s sole determination, specific construction personnel are impairing or impeding the prosecution of the Work.

2.4 OWNER'S RIGHT TO CARRY OUT THE WORK

2.4.1 If the Contractor defaults or neglects to carry out the Work in accordance with the Contract Documents and fails within a seven-day period after receipt of written notice from the Owner to commence and continue correction of such default or neglect with diligence and promptness, the Owner may, immediately without prejudice to other remedies the Owner may have, correct such deficiencies. In such case an appropriate

Change Order shall be issued deducting from payments then or thereafter due the Contractor the reasonable cost of correcting such deficiencies, including Owner's expenses and compensation for the Consultant's additional services made necessary by such default, neglect or failure. Such change order shall be deemed signed by the Contractor for the purposes of this Agreement even if the Contractor fails to physically sign such Change Order. If payments then or thereafter due the Contractor are not sufficient to cover such amounts, the Contractor shall promptly pay the difference to the Owner. The rights stated herein shall be in addition to and not in lieu of any rights afforded the Owner.

ARTICLE 3 CONTRACTOR

3.1 GENERAL

3.1.1 The Contractor is the person or entity identified as such in the Agreement and is referred to throughout the Contract Documents as if singular in number. The term "Contractor" means the Contractor or the Contractor's Authorized Representative.

3.1.2 The Contractor shall perform and complete the Work in accordance with the Contract Documents for the Contract Sum and within the Contract Time.

3.1.3 The Contractor shall not be relieved of obligations to perform the Work in accordance with the Contract Documents either by activities or duties of the Consultant in the Consultant's administration of the Contract, or in the performance of its obligations or by tests, inspections or approvals required or performed by persons other than the Contractor.

3.2 REVIEW OF CONTRACT DOCUMENTS AND FIELD CONDITIONS BY CONTRACTOR

3.2.1 Since the Contract Documents are complementary, before starting each portion of the Work, the Contractor shall carefully study and compare the various Drawings and other Contract Documents relative to that portion of the Work, as well as the information furnished by the Owner, shall take field measurements of any existing conditions, including all general reference points and interfering site conditions related to that portion of the Work and shall observe any conditions at the site affecting it and shall carefully compare such field measurements and conditions and other information known to the Contractor with the Contract Documents before commencing such activities. These obligations are for the purpose of facilitating construction by the Contractor and are not for the purpose of discovering errors, omissions, or inconsistencies in the Contract Documents; however, any errors, inconsistencies or omissions known, recognized or discovered by the Contractor shall be reported promptly to the Consultant in writing as a request for information in such form as the Consultant may require.

3.2.2 Any design errors or omissions noted by the Contractor during this review shall be reported promptly to the Consultant in writing, but it is recognized that the Contractor's review is made in the Contractor's capacity as a contractor and not as a licensed design professional unless otherwise specifically provided in the Contract Documents. The Contractor is not required to ascertain that the Contract Documents are in accordance with applicable laws, statutes, ordinances, building codes, and rules and regulations, but any nonconformity recognized discovered by or made known to the Contractor shall be reported promptly to the Consultant in writing. The accuracy of grades, elevations, dimensions, locations or otherwise of existing conditions are not warranted to be accurate. The Contractor is solely responsible for verifying the accuracy of grades, elevations, dimensions, locations or otherwise of existing conditions prior to entering in to the Contract.

3.2.3 If the Contractor believes that additional cost or time is involved because of clarifications or instructions issued by the Consultant in response to the Contractor's notices or requests for information pursuant to Subparagraphs 3.2.1 and 3.2.2, the Contractor shall make Claims as provided in Subparagraphs 4.3.6 and 4.3.7. If the Contractor fails to perform the obligations of Subparagraphs 3.2.1 and 3.2.2, the Contractor shall pay such costs and damages to the Owner as would have been avoided if the Contractor had performed such obligations. Except as provided herein, the Contractor shall not be

liable to the Owner or Consultant for damages resulting from errors, inconsistencies or omissions in the Contract Documents or for differences between field measurements or conditions and the Contract Documents unless the Contractor discovered, had knowledge of, recognized or should have recognized such error, inconsistency, omission or difference and failed to report it to the Owner and to the Consultant or accepted the responsibility to verify the same. If the Contractor performs any construction activity it knows or reasonably should have known involves an error, inconsistency or omission in the Contract Documents or reports referenced therein without such notice to the Owner and the Consultant, the Contractor shall assume responsibility for such performance and shall bear the costs attributed to the correction.

3.2.4. In addition to and not in derogation of the Contractor's duties the Contractor shall take all field measurements and verify all field conditions and shall carefully compare such field measurements and conditions with all other information known to the Contractor or included in any of the Contract Documents before commencing any construction activity for the Work. The Owner shall not be liable for any errors, inconsistencies or omissions which should have been reasonably discovered and the Contractor shall report in writing to the Consultant and Owner any errors, inconsistencies or omissions.

3.2.5. Any investigations of subsurface conditions have been made for design purposes only. The results of these investigations may be available for the convenience of the Bidders and the Sub-bidders but are not a part of the Contract Documents. While the Contractor may rely on such investigation results there is no representations or warranties, express or implied that the conditions indicated are representative of those existing at the site or that unforeseen developments may not occur. The Contractor is solely responsible for reasonably interpreting the information and extrapolating beyond the location of each individual boring, test pit, or other testing location.

3.2.6. The Contractor shall do no work without applicable Drawings, Specifications, or written modifications or, where required, Shop Drawings, Product Data, or Samples, unless instructed to do so in writing by the Consultant and Owner.

3.3 SUPERVISION AND CONSTRUCTION PROCEDURES

3.3.1 The Contractor shall supervise and direct the Work, using the Contractor's best skill and attention. The Contractor shall be solely responsible for and have control over construction means, methods, techniques, sequences and procedures and for coordinating all portions of the Work under the Contract. Contractor shall review any specified construction or installation procedure and shall advise the Owner and the Consultant in writing if the specified procedure deviates from acceptable construction practices will impact any warranty or if the Contractor has any objection thereto.

3.3.2 The Contractor shall be responsible to the Owner for acts and omissions of the Contractor's employees, Subcontractors, of any tier, and their agents and employees, and any other persons or entities performing portions of the Work for or on behalf of the Contractor or any Subcontractors of any tier and for any damages, losses, costs and expenses resulting from such acts or omissions.

3.3.3 The Contractor shall be responsible for inspection of portions of Work already performed to determine that such portions are in proper condition to receive subsequent Work.

3.3.4. The Contractor shall inspect, prior to installation, all materials and equipment delivered to, installed at, or fabricated at the site and shall reject that which will not conform to the Contract Documents when fully and properly installed.

3.4 LABOR AND MATERIALS

3.4.1 Unless otherwise provided in the Contract Documents, the Contractor shall provide and pay for labor, materials, equipment, tools, telephone, data transmission, construction equipment and machinery, water,

heat, utilities, transportation, and other facilities and services necessary for proper execution and completion of the Work, whether temporary or permanent and whether or not incorporated or to be incorporated in the Work.

3.4.2 The Contractor may make substitutions only with the written consent of the Owner, after evaluation by the Consultant and in accordance with a Change Order.

3.4.3 The Contractor shall enforce strict discipline and good order among the Contractor's employees and other persons carrying out the Contract. The Contractor shall not permit employment of unfit persons or persons not skilled in tasks assigned to them.

3.5 WARRANTY

3.5.1 The Contractor warrants to the Owner and Consultant that the Work, including, but not limited to, any and all materials and equipment furnished under the Contract will be of good quality and new unless otherwise required or permitted by the Contract Documents, that the Work will be free from defects not inherent in the quality required or permitted, and that the Work will conform to the requirements of the Contract Documents. Work not conforming to these requirements, including substitutions not properly approved and authorized, may be considered defective. The Contractor's warranty excludes remedy for damage or defect caused by abuse, modifications not executed by the Contractor, improper or insufficient maintenance, improper operation, or normal wear and tear and normal usage. If required by the Consultant, the Contractor shall furnish satisfactory evidence as to the kind and quality of materials and equipment. In addition, the Contractor assigns to the Owner any and all warranties. The Contractor further warrants that all construction activity of the Work shall be performed on the Work so as to preserve all such warranties. To the extent that any warranty is non-assignable, Contractor warrants that it will pursue such warranty claim for the use and benefit of the Owner without cost or expense to the owner. The Contractor shall require this provision to be included in all subcontracts of any tier.

3.6 TAXES

3.6.1 The Contractor shall pay as and when due_sales, consumer, property, occupational, Social Security benefits, unemployment compensation, use and similar taxes, excises, duties and assessments for the Work provided by the Contractor.

3.7 PERMITS, FEES AND NOTICES

3.7.1 Unless otherwise provided in the Contract Documents, the Contractor shall secure and pay for the building permit and other permits and governmental fees, licenses and inspections necessary for proper execution and completion of the Work which are customarily secured after execution of the Contract and which are legally required when bids are received, negotiations concluded or the Contract is executed. To the extent that there is any difference in these requirements the most stringent requirements on the Contractor shall apply.

3.7.2 The Contractor shall comply with and give notices required by laws, ordinances, rules, regulations and lawful orders of public authorities applicable to performance of the Work. If the Contractor fails to comply or give such notices it will be liable for and shall to the fullest extent permitted by law defend indemnify and hold the Owner and Consultant and their respective employees, officers and agents harmless from any costs, loss, penalty or damage.

3.7.3 Except as otherwise provided herein, it is not the Contractor's responsibility to ascertain that the Contract Documents are in accordance with applicable laws, statutes, ordinances, building codes, and rules and regulations. However, if the Contractor becomes aware, gains knowledge, recognizes or observes that portions of the Contract Documents are at variance therewith, the Contractor shall promptly notify the

Consultant and Owner in writing, and necessary changes shall be accomplished by appropriate Modification.

3.7.4 If the Contractor performs Work knowing the construction activity to be contrary to laws, statutes, ordinances, building codes, and rules and regulations without such notice to the Consultant and Owner, the Contractor shall assume appropriate responsibility for such Work and shall bear the costs, loss, damages and penalties attributable to correction.

3.8 ALLOWANCES

3.8.1 The Contractor shall include in the Contract Sum any and all allowances stated in the Contract Documents. Items covered by allowances shall be supplied for such amounts and by such persons or entities as the Owner may direct, but the Contractor shall not be required to employ persons or entities to whom the Contractor has reasonable objection.

3.8.2 Unless otherwise provided in the Contract Documents:

.1 allowances shall cover the cost to the Contractor of materials and equipment delivered at-the site and all required taxes, less applicable trade discounts;

.2 Contractor's costs for unloading and handling at the site, labor, installation costs, overhead, profit and other expenses contemplated for stated allowance amounts shall be included in the Contract Sum but not in the allowances;

.3 whenever costs are more than or less than allowances, the Contract Sum shall be adjusted accordingly by Change Order. The amount of the Change Order shall reflect (I) the difference between actual costs and the allowances under Clause 3.8.2.1 and (2) changes in Contractor's costs under Clause 3.8.2.2.

3.8.3 Materials and equipment under an allowance shall be selected by the Owner in sufficient time to avoid delay in the Work.

3.9 SUPERINTENDENT

3.9.1 The Contractor shall employ an experienced and competent superintendent and necessary assistants who shall be in attendance at the Project site at all times during performance of the Work including completion of the punch list. The Contractor shall notify the Consultant and the Owners Representative as to the identity of the superintendent who shall not be changed during the course of the Work without prior written notification to the Consultant and Owner Representative. The superintendent shall represent the Contractor, and communications given to the superintendent shall be as binding as if given to the Contractor. Important communications shall be confirmed in writing. Other communications shall be similarly confirmed on written request in each case.

3.10 CONTRACTOR'S CONSTRUCTION SCHEDULES

3.10.1 The Contractor, promptly and within ten (10) days after being awarded the Contract, shall prepare and submit for the Owner's and Consultant's information a preliminary Contractor's construction schedule for the Work consistent with the with the requirements of the Contract Documents. Prior to submitting its first Application for Payment, the Contractor, after consultation with its subcontractors, shall submit six (6) hard copies and one electronic copy of the Contractor’s construction schedule consistent with the requirements of the Contract Documents. The schedule shall not exceed time limits current under the Contract Documents, shall be revised at appropriate intervals as required by the conditions of the Work and Project, shall be related to the entire Project to the extent required by the Contract Documents, and shall provide for expeditious and practicable execution of the Work. The construction schedule shall not be changed without the prior written consent of the Owners Representative.

3.10.2 The Contractor shall prepare and keep current, for the Consultant's review, a schedule of submittals which is coordinated with the Contractor's construction schedule and allows the Owner and the Consultant reasonable time to review in accordance with the Specifications and submittal procedures. The Contractor should expect a response time of approximately 21 days from the Consultant and Consultant's consultants. Neither the Consultant nor Owner can represent or guarantee response times from governmental authorities, such as permitting agencies. Neither the Contractor's preparation, nor the Consultant's receipt or review shall modify the Contractor's responsibility to make required submittals or to do so in a timely manner.

3.10.3 The Contractor shall perform the Work in accordance with the most recent schedules submitted to the Owner and accepted by the Owner and shall promptly notify the Owner of any deviations from the schedule. Should the Contractor fail to comply with the schedule, or in the Owner's opinion fail, refuse, or neglect to supply a sufficient amount of labor, materials, equipment or services in the prosecution of the Work, the Owner shall have the right to direct the Contractor to furnish such additional labor, materials, equipment or services to comply with the schedule and all costs thereof shall be borne by the Contractor and shall not increase the Contract Sum. All schedules submitted shall be in the form acceptable to the Owner using critical path methodology (CPM) clearly showing overall Project and specific items and tasks of construction activities, dependencies and durations as well as overall and specific commencement and completions dates. The critical path activities shall be highlighted, float and non-critical activities shall be shown and the start and stop times for each activity shall be listed. Float belongs to the benefit of the Project for the Owner's use and no float shall be used without the Owner's written approval. The Contractor shall at all times monitor the progress of the Work for conformance with the CPM schedule accepted by the Owner and shall promptly advise the Owner and Consultant of any impacts or delays or potential impacts or delays. The Contractor shall also update the construction schedule to reflect actual conditions and shall propose plans in order to avoid or correct any impact or delays.

3.11 DOCUMENTS AND SAMPLES AT THE SITE

3.11.1 The Contractor shall maintain at the site for the Owner one (1) record copy of the Drawings, Specifications, Addenda, Change Orders and other Modifications, in good order and marked currently to record field changes and selections made during construction, and one (1) record copy of approved Shop Drawings, Product Data, Samples and similar required submittals. These shall be accessible to inspectors and available to the Consultant and Owner and shall be delivered to the Consultant for submittal to the Owner upon completion of the Work and before Contractor's request for final payment.

3.12 SHOP DRAWINGS, PRODUCT DATA AND SAMPLES

3.12.1 Shop Drawings are drawings, diagrams, schedules and other data specially prepared for the Work by the Contractor or a Subcontractor, Sub-subcontractor, manufacturer, supplier or distributor to illustrate some portion of the Work.

3.12.2 Product Data are illustrations, standard schedules, performance charts, instructions, brochures, diagrams and other information furnished by the Contractor to illustrate materials or equipment for some portion of the Work.

3.12.3 Samples are physical examples which illustrate materials, equipment or workmanship and establish standards by which the Work will be judged.

3.12.4 Shop Drawings, Product Data, Samples and similar submittals are not Contract Documents. The purpose of their submittal is to demonstrate for those portions of the Work for which submittals are required by the Contract Documents the way by which the Contractor proposes to conform to the information given and the design concept expressed in the Contract Documents. Review by the Consultant or any other person is subject to the limitations of Subparagraph 4.2. 7. Information submittals upon which the Consultant is not expected to take responsive action may be so identified in the Contract Documents.

Submittals which are not required by the Contract Documents may be returned by the Consultant without action.

3.12.5 The Contractor shall review for compliance with the Contract Documents, approve and submit to the Consultant, Shop Drawings, Product Data, Samples and similar submittals required by the Contract Documents with reasonable promptness and in such sequence as to cause no delay in the Work or in the activities of the Owner or of separate contractors. Submittals which are not marked as reviewed for compliance with the Contract Documents and approved by the Contractor may be returned by the Consultant without action.

3.12.6 By approving and submitting Shop Drawings, Product Data, Samples and similar submittals, the Contractor represents that the Contractor has determined and verified materials, field measurements and field construction criteria related thereto, or will do so, and has checked and coordinated the information contained within such submittals with the requirements of the Work and of the Contract Documents.

3.12.7 The Contractor shall perform no portion of the Work for which the Contract Documents require submittal and review of Shop Drawings, Product Data, Samples or similar submittals until the respective submittal has been approved by the Consultant.

3.12.8 The Work shall be in accordance with approved submittals except that the Contractor shall not be relieved of responsibility for deviations from requirements of the Contract Documents by any approval of Shop Drawings, Product Data, Samples or similar submittals unless the Contractor has specifically informed the Consultant and Owner in writing of such deviation at the time of submittal and (1) the Consultant has given specific written approval to the specific deviation as a minor change in the Work, or (2) a Change Order or Construction Change Directive has been issued authorizing the deviation. The Contractor shall not be relieved of responsibility for errors or omissions in Shop Drawings, Product Data, Samples or similar submittals by the, any person's approval thereof.

3.12.9 The Contractor shall direct specific attention, in writing or on resubmitted Shop Drawings, Product Data, Samples or similar submittals, to revisions other than those requested by the Consultant on previous submittals. In the absence of such written notice, any person's approval of a resubmission shall not apply to such revisions. Contractor shall submit Shop Drawings, Product Data, Samples and similar submittals in forms and in a manner reasonably acceptable to the Consultant. Contractor shall submit no less than two (2) copies or examples for review of any Shop Drawings, Product Data, Samples or similar submittals at Contractor’s sole cost and expense.

3.12.10 The Contractor shall not be required to provide professional services which constitute the practice of Architecture or engineering unless such services are specifically required by the Contract Documents for a portion of the Work or unless the Contractor needs to provide such services in order to carry out the Contractor's responsibilities for construction means, methods, techniques, sequences and procedures. The Contractor shall not be required to provide professional services in violation of applicable law. If professional design services or certifications by a design professional related to systems, materials or equipment are specifically required of the Contractor by the Contract Documents, the Owner and the Consultant will specify all performance and design criteria that such services must satisfy. The Contractor shall cause such services or certifications to be provided by a properly licensed design professional, whose signature and seal shall appear on all drawings, calculations, specifications, certifications, Shop Drawings and other submittals prepared by such professional. Shop Drawings and other submittals related to the Work designed or certified by such professional, if prepared by others, shall bear such professional's written approval when submitted to the Consultant. The Owner and the Consultant shall be entitled to rely upon the adequacy, accuracy and completeness of the services, certifications or approvals performed by such design professionals, provided the Owner and Consultant have specified to the Contractor all performance and design criteria that such services must satisfy. Pursuant to this Subparagraph 3.12.10, the Consultant will review, approve or take other appropriate action on submittals only for the limited purpose of checking for conformance with information given and the design concept expressed in the Contract Documents. The

Contractor shall not be responsible for the adequacy of the performance or design criteria required by the Contract Documents.

3.13 USE OF SITE

3.13.1 The Contractor shall confine operations at the site to areas permitted by law, ordinances, permits and the Contract Documents and shall not unreasonably encumber the site with materials or equipment. Notwithstanding anything contained in the Contract Documents to the contrary, the Contractor shall, as part of the Work, not disrupt or interfere in any manner with any of the Owner's or Owner's authorized provider's operations at the Project site or any other locations, including, without limitation any and all educational, social, athletic or recreational programs, activities, classes or events. Contractor shall not park or otherwise utilize any other area designated by the Owner or typically used by Owner's employees, staff, students, parents or visitors or local residents or businesses.

3.14 CUTTING AND PATCHING

3.14.1 The Contractor shall be responsible for cutting, fitting or patching required to complete the Work or to make its parts fit together properly.

3.14.2 The Contractor shall not damage or endanger a portion of the Work or fully or partially completed construction of the Owner or separate contractors by cutting, patching or otherwise altering such construction, or by excavation. The Contractor shall not cut or otherwise alter such construction by the Owner or a separate contractor except with written consent of the Owner and of such separate contractor; such consent shall not be unreasonably withheld. The Contractor shall not unreasonably withhold from the Owner or a separate contractor the Contractor's consent to cutting or otherwise altering the Work. To the extent that the Work involves renovation, alteration or repair of existing improvements, cutting and patching essential for the Project shall be successfully completed and Contractor shall perform the Work so that it is fully integrated into the existing improvements operationally and aesthetically.

3.15 CLEANING UP

3.15.1 The Contractor shall at all times keep the premises and surrounding area free from accumulation of waste materials or rubbish caused by operations under the Contract. At completion of the Work, the Contractor shall remove from and about the Project waste materials, rubbish, the Contractor's tools, construction equipment, machinery and surplus materials.

3.15.2 If the Contractor fails to clean up as provided in the Contract Documents, the Owner may do so and the cost thereof shall be charged to the Contractor.

3.16 ACCESS TO WORK

3.16.1 The Contractor shall provide the Owner and Consultant and their employees. agents and officers access to the Work in preparation and progress wherever located.

3.17 ROYALTIES, PATENTS AND COPYRIGHTS

3.17.1 The Contractor shall pay all royalties and license fees. The Contractor shall defend suits or claims for infringement of copyrights and patent rights and shall hold the Owner and Consultant harmless from loss on account thereof, but shall not be responsible for such defense or loss when a particular design, process or product of a particular manufacturer or manufacturers is required by the Contract Documents or where the copyright violations are contained in Drawings, Specifications or other documents prepared by the Owner or Consultant. However, if the Contractor has reason to believe that the required design, process or product is an infringement of a copyright or a patent, the Contractor shall be responsible for such loss unless such information is promptly furnished to the Consultant in writing.

3.18 INDEMNIFICATION

3.18.1 To the fullest extent permitted by law and to the extent claims, damages, losses or expenses are not covered by Project Management Protective Liability insurance purchased by the Contractor in accordance with Paragraph 11.2, the Contractor shall indemnify and hold harmless the Owner, Consultant, Consultant's consultants, and agents and employees of any of them from and against claims, damages, losses and expenses, including, but not limited to, attorneys' fees, arising out of or resulting from performance of the Work, provided that such claim, damage, loss or expense is attributable to bodily injury, sickness, disease or death, or to injury to or destruction of tangible property (other than the Work itself), but only to the extent caused by the negligent acts or omissions of the Contractor, any Subcontractor, anyone directly or indirectly employed by them or anyone for whose acts they may be liable, regardless of whether or not such claim, damage, loss or expense is caused in part by a party indemnified hereunder. Such obligation shall not be construed to negate, abridge, or reduce other rights or obligations of indemnity which would otherwise exist as to a party or person described in this Paragraph 3.18.

3.18.2 In claims against any person or entity indemnified under this Paragraph 3.18 by an employee of the Contractor, Subcontractor, anyone directly or indirectly employed by them or anyone for whose acts they may be liable, the indemnification obligation under Subparagraph 3.18.1 shall not be limited by a limitation on amount or type of damages, compensation or benefits payable by or for the Contractor or a Subcontractor under workers' compensation acts, disability benefit acts or other employee benefit acts.

ARTICLE 4 ADMINISTRATION OF THE CONTRACT

4.1 CONSULTANT OR OWNER’S REPRESENTATIVE

4.1.1 The term “Consultant” as used in the Contract Documents, shall mean MFIA Inc. or “Owner’s Representative”, as used in the Contract Documents, shall mean HMK Company (HMKCO), and its respective personnel.

> **4.1.2.1** If a licensed Consultant is engaged by Owner who is not designated as the “Owner’s Representative”, the Owner shall make written directive and notification to Contractor, which shall perform any Contract Administration duties. For ease of reference and consistency, the term “Consultant” shall be used in the Contract Documents to refer to the contract administrator.

4.1.2 Duties, responsibilities and limitations of authority of the Consultant as set forth in the Contract Documents shall not be restricted, modified or extended without written consent of the Owner, and Consultant.

4.1.3 If the employment of the Consultant is terminated, the Owner shall employ a new Consultant under such terms and conditions as are agreeable between the Owner and the new Consultant.

4.2 CONSULTANT'S ADMINISTRATION OF THE CONTRACT

4.2.1 The Consultant may provide administration of the Contract as described in the Contract Documents, and may be an Owner's representative (1) during construction, (2) until final payment is due and (3) with the Owner's concurrence, from time to time during the one-year period for correction of Work described in Paragraph 12.2. The Consultant will have authority to act on behalf of the Owner only to the extent provided in the Contract Documents, unless otherwise modified in writing in accordance with other provisions of the Contract.

4.2.2 The Consultant, as a representative of the Owner, will visit the site at intervals appropriate to the stage of the Contractor's operations (1) to become generally familiar with and to keep the Owner informed about the progress and quality of the portion of the Work completed, (2) to endeavor to guard the Owner against defects and deficiencies in the Work, and (3) to determine in general if the Work is being performed in a manner indicating that the Work, when fully completed, will be in accordance with the Contract Documents.

However, the Consultant will not be required to make exhaustive or continuous on-site inspections to check the quality or quantity of the Work. The Consultant will neither have control over or charge of, nor be responsible for the construction means, methods, techniques, sequences or procedures, or for the safety precautions and programs in connection with the Work, since these are solely the Contractor's rights and responsibilities under the Contract Documents, except as provided in Subparagraph 3.3.1.

4.2.3 The Consultant will not be responsible for the Contractor's failure to perform the Work in accordance with the requirements of the Contract Documents. The Consultant will not have control over or charge of and will not be responsible for acts or omissions of the Contractor, any Subcontractors, or their agents or employees, or any other persons or entities performing portions of the Work.

4.2.4 Communications Facilitating Contract Administration. The Owner, Owners Representative and Contractor may communicate with each other through the Consultant about matters arising out of or relating to the Contract. The Contractor shall also PROVIDE THE OWNER AND OWNERS REPRESENTATIVE WITH A DIRECT COPY OF ALL WRITTEN COMMUNICATIONS TO THE CONSULTANT, including all notices, requests, Claims and potential changes in the Contract Sum or Time, but not including Shop Drawings, Product Data or Samples. Communications by and with the Consultant's consultants shall be through the Consultant. Communications by and with Subcontractors and material suppliers shall be through the Contractor. Communications by and with separate contractors shall be through the Owner.

4.2.5 Based on the Consultant's evaluations of the Contractor's Applications for Payment, the Consultant may review and certify the amounts due the Contractor and will issue Certificates for Payment in such amounts.

4.2.6 The Consultant may have authority to reject Work that does not conform to the Contract Documents. Whenever the Consultant considers it necessary or advisable, the Consultant may have authority to require inspection or testing of the Work in accordance with Subparagraphs 13.5.2 and 13.5.3, whether or not such Work is fabricated, installed or completed. However, neither this authority of the Consultant nor a decision made in good faith either to exercise or not to exercise such authority shall give rise to a duty or responsibility of the Consultant to the Contractor, Subcontractors, material and equipment suppliers, their agents or employees, or other persons or entities performing portions of the Work.

4.2.7 The Consultant will review and approve or take other appropriate action upon the Contractor's submittals such as Shop Drawings, Product Data and Samples, but only for the limited purpose of checking for conformance with information given and the design concept expressed in the Contract Documents. The Consultant's action will be taken with such reasonable promptness as to cause no delay in the Work or in the activities of the Owner, Contractor or separate contractors, while allowing sufficient time in the Consultant's professional judgment to permit adequate review. Review of such submittals is not conducted for the purpose of determining the accuracy and completeness of other details such as dimensions and quantities, or for substantiating instructions for installation or performance of equipment or systems, all of which remain the responsibility of the Contractor as required by the Contract Documents. The Consultant's review of the Contractor's submittals shall not relieve the Contractor of the obligations under Paragraphs 3.3, 3.5 and 3.12. The Consultant's review shall not constitute approval of safety precautions or, unless otherwise specifically stated by the Consultant, of any construction means, methods, techniques, sequences or procedures. The Consultant's approval of a specific item shall not indicate approval of an assembly of which the item is a component.

4.2.8 The Consultant may prepare Change Orders and Construction Change Directives, and may authorize minor changes in the Work as provided in Paragraph 7.4.

4.2.9 The Consultant may conduct inspections to determine the date or dates of Substantial Completion and the date of final completion, may receive and forward to the Owner, for the Owner's review and records, written warranties and related documents required by the Contract and assembled by the Contractor, and may issue a final Certificate for Payment upon compliance with the requirements of the Contract Documents.

4.2.10 If the Owner and Consultant designate, the Consultant will provide one or more project representatives to assist in carrying out the Consultant's responsibilities at the site.

4.2.11 The Consultant may interpret and decide matters concerning performance under and requirements of, the Contract Documents on written request of either the Owner or Contractor. The Consultant's response to such requests will be made in writing within any time limits agreed upon or otherwise with reasonable promptness. If no agreement is made concerning the time within which interpretations required of the Consultant shall be furnished in compliance with this Paragraph 4.2, then delay shall not be recognized on account of failure by the Consultant to furnish such interpretations until 5 days after written request is made for them.

4.2.12 Interpretations and decisions of the Consultant, if any, will be consistent with the intent of and reasonably inferable from the Contract Documents and will be in writing or in the form of drawings. When making such interpretations and initial decisions, the Consultant will endeavor to secure faithful performance by both Owner and Contractor, will not show partiality to either and will not be liable for results of interpretations or decisions so rendered in good faith.

4.2.13 The Consultant's decisions on matters relating to aesthetic effect may be final if consistent with the intent expressed in the Contract Documents. The terms and conditions of the Owner's agreement with the Consultant shall govern the Consultant's responsibilities.

4.3 CLAIMS AND DISPUTES

4.3.1 Definition. A Claim is a demand or assertion by one of the parties seeking, as a matter of right, adjustment or interpretation of Contract terms, payment of money, and extension of time or other relief with respect to the terms of the Contract. The term "Claim" also includes other disputes and matters in question between the Owner and Contractor arising out of or relating to the Contract. Claims must be initiated by written notice. The responsibility to substantiate Claims shall rest with the party making the Claim.

4.3.2 Time Limits on Claims. Claims by either party must be initiated within 21 days after occurrence of the event giving rise to such Claim or within 21 days after the claimant first recognizes the condition giving rise to the Claim, whichever is later. Claims must be initiated by written notice to the Consultant and the other party.

4.3.3 Continuing Contract Performance. Pending final resolution of a Claim except as otherwise agreed in writing or as provided in Subparagraph 9.7.1 and Article 14, the Contractor shall proceed diligently with performance of the Contract and the Owner shall continue to make payments in accordance with the Contract Documents.

4.3.4 Claims for Concealed or Unknown Conditions. Except as otherwise provided herein, if conditions are encountered at the site which are (1) subsurface or otherwise concealed physical conditions which differ materially from those indicated in the Contract Documents or (2) unknown physical conditions of an unusual nature, which differ materially from those ordinarily found to exist and generally recognized as inherent in construction activities of the character provided for in the Contract Documents, the Contractor shall give written notice to the Owner and the Consultant promptly before conditions are disturbed and in no event later than seven (7) days after first observance of the conditions. The Consultant may promptly investigate such conditions and, if they differ materially and cause an increase or decrease in the Contractor's cost of, or time required for, performance of any part of the Work, will recommend an equitable adjustment in the Contract Sum or Contract Time, or both, consistent with the requirements of the Contract Documents. If the Consultant determines that the conditions at the site are not materially different from those indicated in the Contract Documents and that no change in the terms of the Contract is justified, the Consultant may so notify the Owner and Contractor in writing, stating the reasons. Any claim of the Contractor arising from the Consultant’s determination shall be made in accordance with the dispute resolution procedures set forth in Paragraphs 4.4 through 4.6. No adjustment in the Contract Time or Sum shall be permitted, however, if connection with any concealed or unknown condition which does not materially differ from those disclosed

or which should have reasonably been discovered by the Contractor's prior visits, observations, tests or for which the Contractor assumed any responsibility to verify.

4.3.5 Claims for Additional Cost. If the Contractor wishes to make Claim for an increase in the Contract Sum, written notice as provided herein shall be given before proceeding to execute the Work, and a Claim must be made in accordance with Paragraphs 4.4 through 4.6 or it will be deemed waived. Prior notice is not required for Clams relating to an emergency endangering life or property arising under Paragraph 10.6.

4.3.6 If the Contractor believes additional cost is involved for reasons, including, but not limited to:

.1 a written interpretation from the Consultant

.2 an order by the Owner to stop the Work where the Contractor was not at fault

.3 a written order for a minor change in the Work issued by the Consultant

.4 failure of payment by the Owner

.5 termination of the Contract by the Owner

.6 Owner's suspension or

.7 other reasonable grounds, Claim shall be filed in accordance with this Paragraph 4.3.

All Claims for additional costs shall include any and all costs, including, but not limited to, any and all direct and indirect costs thereof.

4.3.7 Claims for Additional Time

4.3.7.1 If the Contractor wishes to make Claim for an increase in the Contract Time, written notice as provided herein shall be given and a Claim shall be made as provided herein. The Contractor's Claim shall include an estimate of any cost and of probable effect of delay on progress of the Work. In the case of a continuing delay, only one Claim is necessary. If the delay was not caused by the Owner, the Contractor, a Subcontractor of any tier, or the Consultant, or anyone acting on behalf of any of them, the Contractor shall be entitled only to an increase in the Contract Time, in accordance with the Contract documents, but not a change in the Contract Sum. If the delay was caused by the Contractor, a Subcontractor of any tier, or anyone acting on behalf of any of them, the Contractor is not entitled to an increase in the Contract Time or in the Contract Sum.

4.3.7.2 If adverse weather conditions are the basis for a Claim for additional time, such Claim shall be documented by data substantiating that weather conditions were abnormal for the period of time, could not have been reasonably anticipated and had an adverse effect on the scheduled construction, and that the Work was on schedule (or was not behind schedule through the fault of the Contractor) at the time the adverse weather conditions occurred. Neither the Contract Time nor the Contract Sum will be adjusted for normal inclement weather. The Contractor shall be entitled to a change in the Contract Time only if the Contractor can substantiate to the reasonable satisfaction of the Owner and Consultant that there was materially greater than normal inclement weather considering the full term of the Contract Time and using a ten-year average of accumulated record mean values from climatological data compiled by the U.S. Department of Commerce National Oceanic and Atmospheric Administration for the locale of the Project, and that the alleged abnormal inclement weather actually extended the critical path of the Work. IF the total net accumulated number of calendar days lost due to inclement weather from commencement of the Work until Final Completion exceeds the total net accumulated to be expected for the same period from the aforesaid data, and the Owner grants the critical path.

4.3.8 Injury or Damage to Person or Property. If either party to the Contract suffers injury or damage to person or property because of an act or omission of the other party, or of others for whose acts such party is legally responsible, written notice of such injury or damage, whether or not insured, shall be given to the other party within a reasonable time not exceeding 21 days after discovery. The notice shall provide sufficient detail to enable the other party to investigate the matter.

4.3.9 If unit prices are stated in the Contract Documents or subsequently agreed upon, and if quantities originally contemplated are materially changed in a proposed Change Order or Construction Change Directive so that application of such unit prices to quantities of Work proposed will cause substantial inequity to the Owner or Contractor, the applicable unit prices shall be equitably adjusted.

4.3.10 Time is of the Essence. The parties agree that the Owner shall be entitled to recover liquidated damages at the rate stated in the Agreement, which shall commence on the first day following the expiration of the Contract Time and continuing until the date of Substantial completion.

4.4 RESOLUTION OF CLAIMS AND DISPUTES

4.4.1 In an effort to reduce the incidence and costs to all parties of extended disputes, all Claims, direct or indirect, arising out of, or relating to, the Contract Documents or the breach thereof, except claims which have been waived under the terms of the Contract Documents, shall be decided exclusively by the following alternative dispute resolution procedure unless the parties mutually agree in writing otherwise.

4.4.2 The Contractor shall submit a written notice of any Claim to the Owner and the Consultant within 14 days of the occurrence of the event giving rise to such Claim and shall include a clear description of the event leading to or causing the Claim. The Contract shall submit a written Claim as providing herein within 30 days of the notice. Claims shall include a clear description of the Claim and any proposed change in the Contract Sum (showing all components and calculations) and/or Contract Time (showing cause of and analysis of the resultant delay in the critical path) of the Claim and shall provide data fully supporting the Claim. Failure to properly submit the notice of Claim shall constitute waiver of the Claim. The Claim shall be deemed to include all changes, direct and indirect, in cost and in time to which the Contractor (and Subcontractors of any tier) is entitled. Any claim of a Subcontractor of any tier may be brought only through, and after review by, the Contractor.

4.4.3 Upon receipt of a Claim against the Contractor or at any time thereafter, the Consultant or the Owner may, but is not obligated to, notify the surety, if any, of the nature and amount of the Claim. If the Claim relates to a possibility of a Contractor's default, the Consultant or the Owner may, but is not obligated to, notify the surety and request the surety's assistance in resolving the controversy.

4.4.4 If a claim relates to or is the subject of a mechanic’s lien or construction lien, the party asserting such Claim may proceed in accordance with applicable law to comply with the lien notice or filing deadlines prior to resolution of the Claim by the Consultant, by mediation or by litigation.

4.4.5 Within 30 days of the Owner’s receipt of the written Claim, the Contactor may require that an officer of the Contractor, a principal of the Consultant, and the Owner’s Superintendent or designee (all with authority to settle) meet, confer, and attempt to resolve the Claim during the following 21 days. The Owner may continue the meeting to a time after it has assembled and reviewed data. If the Claim is not resolved, the Contractor may bring no claim against the Owner unless the Claim is first subject to nonbinding mediation as described in Paragraph 4.5. This requirement cannot be waived except by an explicit written waiver.

4.4.6 The Contractor agrees that the Owner may join the Contractor as a party to any litigation/arbitration involving the alleged fault of the Contractor or Subcontractor of any tier.

4.5 MEDIATION

4.5.1 Any Claim arising out of or relating to the Contract, except Claims relating to aesthetic effect and except those waived shall be subject to mediation as a condition precedent to the institution of legal or equitable proceedings by either party. This requirement cannot be waived except by an express written waiver.

4.5.2 The parties shall endeavor to resolve their claims by mediation, which unless the parties mutually agree otherwise, shall be in accordance with the Construction Industry Mediation Rule of the American Arbitration Association currently in effect. Request for mediation shall be filed in writing with the other party to the Contract and with the American Arbitration Association. Mediation shall proceed in advance of legal or equitable proceedings, which shall be stayed pending mediation unless stayed for a longer period by agreement of the parties or court order.

4.5.3 The parties to the mediation shall share the mediator's fee and any filing fees equally. The medication shall be held in the place where the Project is located, unless another location is mutually agreed upon. Agreements reached in mediation shall be enforceable as settlement agreements in any court having jurisdiction thereof.

4.5.4 An officer of the Contract and the Owner's Superintendent or designee must attend the mediation session with authority to settle the Claim. To the extent there are other parties in interest, such as the Consultant or Subcontractors, their representatives, also with the authority to settle the Claim, shall also attend the mediation session. Unless the Owner and the Contractor mutually agree in writing otherwise, all unresolved Claims shall be considered at a single mediation session which shall occur prior to Final Acceptance by the Owner.

4.6 LITIGATION

4.6.1 The Contractor may bring no litigation on Claims unless such Claims have been properly raised and considered in the procedures of Subparagraphs 4.4.1 through 4.4.3 above. All unresolved Claims of the Contractor shall be waived and released unless the Contractor has complied with the time limits of the Contract Documents, and litigation is served and filed within the earlier of (a) 120 days after the Date of Substantial Completion approved in writing by the Owner or (b) 60 days after Final Acceptance. This requirement cannot be waived except by an explicit written waiver signed by the Owner and the Contractor. The pendency of mediation shall toll these deadlines until the later of the mediator providing written notice to the parties of impasse or 30 days after the date of the last mediation session. Neither the Contractor nor a Subcontractor of any tier, whether claiming under a lien statute or otherwise, shall be entitled to attorneys' fees directly or indirectly from the Owner (but may recover attorneys' fees from the statutory Retainage fund itself to the extent allowable under law).

4.6.2 Judgment on Final Award. The award rendered by the arbitrator or arbitrators shall be final, and judgment may be entered upon it in accordance with applicable law in any court having jurisdiction thereof.

ARTICLE 5 SUBCONTRACTORS

5.1 DEFINITIONS

5.1.1 The term "Subcontractor" is referred to throughout the Contract Documents as if singular in number and means a Subcontractor or an authorized representative of the Subcontractor. The term "Subcontractor" does not include a separate contractor or subcontractors of a separate contractor.

5.2 AWARD OF SUBCONTRACTS AND OTHER CONTRACTS FOR PORTIONS OF THE WORK

5.2.1 The Contractor shall not change a Subcontractor, person or entity previously selected if the Owner or Consultant makes reasonable objection to such substitute. The Contractor shall require bids and contracts

from Subcontractors to be submitted in a format which specifically sets for the amount of any credit that the Owner will ultimately be the benefit of, if all or any portion of any Subcontractor's Work is deleted. In no instance shall the Owner be obligated to pay any fee, profit or overheard for Work which is deleted from any Subcontractor's scope or from that of the Contractor.

5.3 SUBCONTRACTUAL RELATIONS

5.3.1 By appropriate agreement, written where legally required for validity, the Contractor shall require each Subcontractor, to the extent of the Work to be performed by the Subcontractor, to be bound to the Contractor by terms of the Contract Documents, and to assume toward the Contractor all the obligations and responsibilities, including the responsibility for safety of the Subcontractor's Work, which the Contractor, by these Documents, assumes toward the Owner or Consultant. Each subcontract agreement shall preserve and protect the rights of the Owner and Consultant under the Contract Documents with respect to the Work to be performed by the Subcontractor so that subcontracting thereof will not prejudice such rights. Where appropriate, the Contractor shall require each Subcontractor to enter into similar agreements with other Subcontractors. The Contractor shall make available to each proposed Subcontractor, prior to the execution of the subcontract agreement, copies of the Contract Documents to which the Subcontractor will be bound, and, upon written request of the Subcontractor, identify to the Subcontractor terms and conditions of the proposed subcontract agreement which may be at variance with the Contract Documents. Subcontractors will similarly make copies of applicable portions of such documents available to their respective proposed Sub-subcontractors.

5.4 CONTINGENT ASSIGNMENT OF SUBCONTRACTS

5.4.1 Each subcontract agreement for a portion of the Work is assigned by the Contractor to the Owner or to another contractor should Owner so elect and consent, provided that:

.1 assignment is effective only after termination of the Contract by the Owner and only for those subcontract agreements which the Owner accepts by notifying the Subcontractor and Contractor in writing; and

.2 assignment is subject to the prior rights of the surety, if any, obligated under bond relating to the Contract.

5.4.2 Each subcontract shall specifically provide that the Owner (or other contractor) shall only be responsible to the subcontractor for those obligations that accrue after the Owner's or other contractor's exercise of rights under the conditional assignment required hereby.

ARTICLE 6 CONSTRUCTION BY OWNER OR BY SEPARATE CONTRACTORS

6.1 OWNER'S RIGHT TO PERFORM CONSTRUCTION AND TO AWARD SEPARATE CONTRACTS

6.1.1 The Owner reserves the right to perform construction or operations related to the Project with the Owner's own forces, and to award separate contracts in connection with other portions of the Project or other construction or operations on the site under Conditions of the Contract identical or substantially similar to these including those portions related to insurance and waiver of subrogation. If the Contractor claims that delay or additional cost is involved because of such action by the Owner, the Contractor shall make such Claim as provided in Paragraph 4.3.

6.1.2 When separate contracts are awarded for different portions of the Project or other construction or operations on the site, the term "Contractor" in the Contract Documents in each case shall mean the Contractor who executes each separate Owner-Contractor Agreement.

6.1.3 The Owner shall provide for coordination of the activities of the Owner's own forces and of each separate contractor with the Work of the Contractor, who shall cooperate with them. The Contractor shall

participate with other separate contractors and the Owner in reviewing their construction schedules when directed to do so. The Contractor shall make without an increase in the Contract Time or Sum any revisions to the construction schedule deemed necessary after a joint review and mutual agreement. The construction schedules shall then constitute the schedules to be used by the Contractor, separate contractors and the Owner until subsequently revised.

6.1.4 Unless otherwise provided in the Contract Documents, when the Owner performs construction or operations related to the Project with the Owner's own forces, the Owner shall be deemed to be subject to the same obligations and to have the same rights which apply to the Contractor under the Conditions of the Contract, including, without excluding others, those stated in Article 3, this Article 6 and Articles 10, 11 and 12.

6.2 MUTUAL RESPONSIBILITY

6.2.1 The Contractor shall afford the Owner and separate contractors reasonable opportunity for introduction and storage of their materials and equipment and performance of their activities, and shall connect and coordinate the Contractor's construction and operations with theirs as required by the Contract Documents.

6.2.2 If part of the Contractor's Work depends for proper execution or results upon construction or operations by the Owner or a separate contractor, the Contractor shall, prior to proceeding with that portion of the Work, promptly report to the Consultant apparent discrepancies or defects in such other construction that would render it unsuitable for such proper execution and results. Failure of the Contractor so to report shall constitute an acknowledgment that the Owner's or separate contractor's completed or partially completed construction is fit and proper to receive the Contractor's Work, except as to defects not then reasonably discoverable.

6.2.3 The Owner shall be reimbursed by the Contractor for costs incurred by the Owner which are payable to a separate contractor because of delays, improperly timed activities or defective construction of the Contractor or any Subcontractors. The Owner shall be responsible to the Contractor for costs incurred by the Contractor because of delays, improperly timed activities, and damage to the Work or defective construction of a separate contractor.

6.2.4 The Contractor shall promptly remedy damage wrongfully caused by the Contractor or Subcontractors to completed or partially completed construction or to property of the Owner or separate contractors as provided in Subparagraph 10.2.5.

6.3 OWNER'S RIGHT TO CLEAN UP

6.3.1 If a dispute arises among the Contractor, separate contractors and the Owner as to the responsibility under their respective contracts for maintaining the premises and surrounding area free from waste materials and rubbish, the Owner may clean up and the Consultant may allocate the cost among those responsible.

ARTICLE 7 CHANGES IN THE WORK

7.1 GENERAL

7.1.1 Changes in the Work may be accomplished after execution of the Contract, and without invalidating the Contract, solely by Change Order, Construction Change Directive or order for a minor change in the Work, subject to the limitations stated in this Article 7 and elsewhere in the Contract Documents.

7.1.2 A Change Order shall be based upon agreement among the Owner, Contractor and Consultant; a Construction Change Directive requires agreement by the Owner and Consultant and may or may not be

agreed to by the Contractor; an order for a minor change in the Work may be issued by the Consultant alone.

7.1.3 Changes in the Work shall be performed under applicable provisions of the Contract Documents, and the Contractor shall proceed promptly, unless otherwise provided in the Change Order, Construction Change Directive or order for a minor change in the Work.

7.1.4 Before effectuating a change in the Work, the Owner may request the Contractor to propose the amount of change in the Contract Sum, if any, and the extent of change in the Contract Time, if any, arising from the proposed change in the Work. The Contractor shall submit its responsive proposal as soon as possible and within 14 days and shall in good faith specify the components and amounts by which the Contract Sum and/or Contract Time would change. Labor, materials and equipment shall be limited to and itemized in the manner described in Paragraph 7.5 for the Contractor and major Subcontractors. If the Contractor fails to respond within this time, the Owner may withhold some or all of a progress payment otherwise due until the tardy proposal is received. If the Owner accepts the proposal in writing, the Owner will be immediately bound, the change will be included in a future Change Order, and the change in the Work shall commence expeditiously. The Owner may reject the proposal, in which case the Owner may either not effectuate the change in the Work or may order the change through a Construction Change Directive or an order for a minor change in the Work. The Consultant may confer directly with Subcontractors of any tier concerning any item proposed to the Owner under this Article.

7.2 CHANGE ORDERS

7.2.1 A Change Order is a written instrument which may be prepared by the Consultant and signed by the Owner, Contractor and which may be signed by the Consultant, stating their agreement upon all of the following:

.1 change in the Work;

.2 the amount of the adjustment, if any, in the Contract Sum; and

.3 the extent of the adjustment, if any, in the Contract Time.

7.2.2 Methods used in determining adjustments to the Contract Sum may include those listed in Subparagraph 7.3.3. Agreement on a Change Order shall constitute full and final settlement of all issues and matters related to the change in Work which is subject to the Change Order including, without limitation, any and all direct and indirect costs and all adjustments in the Contract Time and Sum. There shall be no fee due or to become due to the Contractor related to deductive Change Orders.

7.3 CONSTRUCTION CHANGE DIRECTIVES

7.3.1 A Construction Change Directive is a written order which may be prepared by the Consultant and signed by the Owner, and which may be signed by the Consultant, directing a change in the Work prior to agreement on adjustment, if any, in the Contract Sum or Contract Time, or both. The Owner may by Construction Change Directive, without invalidating the Contract, order changes in the Work within the general scope of the Contract consisting of additions, deletions or other revisions, the Contract Sum and Contract Time being adjusted accordingly.

7.3.2 A Construction Change Directive shall be used in the absence of total agreement on the terms of a Change Order.

7.3.3 If the Construction Change Directive provides for an adjustment to the Contract Sum, the adjustment shall be based on one of the following methods:

.1 mutual acceptance of a lump sum properly itemized and supported by sufficient substantiating data to permit evaluation;

.2 unit prices stated in the Contract Documents or subsequently agreed upon;

.3 cost to be determined in a manner agreed upon by the parties (accompanied by an itemized estimate of probable cost) and a mutually acceptable fixed or percentage fee; or

.4 as provided in Subparagraph 7.3.6.

7.3.4 Upon receipt of a Construction Change Directive, the Contractor shall promptly proceed with the change in the Work involved. As soon as possible and within seven (7) days of receipt the Contractor shall advise the Consultant in writing of the Contractor's agreement or disagreement with the proposed adjustment or the method, if any, provided in the Construction Change Directive for determining the proposed adjustment in the Contract Sum or Contract Time. The Contractor's response shall reasonably specify the reasons for its disagreement and the adjustment or other terms that it proposes. Without such timely written response, the Contractor shall conclusively be deemed to have accepted the Owner's adjustment. The Contractor's disagreement shall not relieve the Contractor of its obligations to comply promptly with any written notice issued by the Owner or the Consultant. The adjustment shall then be determined by the Consultant in accordance with the provisions of the Contract Documents.

7.3.5 A Construction Change Directive signed by the Contractor indicates the agreement of the Contractor therewith, including adjustment in Contract Sum and Contract Time or the method for determining them. Such agreement shall be effective immediately and shall be incorporated into and be construed and interpreted as a Change Order.

7.3.6 If the Contractor does not respond promptly or disagrees with the method for adjustment in the Contract Sum, or if cost is to be determined under Clause 7.3.3.3, the Contractor shall keep and present itemized in the categories of Paragraph 7.5 and in such form as the Consultant may prescribe, an itemized accounting together with appropriate supporting data. In order to facilitate checking of such quotations, all proposals, except those so minor that their propriety can be seen be inspection, shall be accompanied by complete itemization of costs, including labor, equipment, material and subcontract costs. Labor, equipment and materials shall be itemized in the manner described in Paragraph 7.5. When major cost items arise from Subcontractors of any tier, these items shall also be similarly itemized. Approval may not be given without such itemization. Failure to provide data within 21 days of the Owner's request shall constitute waiver of any Claim for changes in the Contract Time or Contract Sum. The total cost of any change, including a Claim under Paragraph 4.3 or 4.4, shall be limited to the reasonable value, as determined by the Consultant (subject to appeal through the dispute resolution procedure of Paragraph 4.4), of the items in Paragraph 7.5. Unless otherwise agreed in writing by the Owner, the cost shall not exceed the lower of the prevailing cost for the work in the locality of the Project or the cost of the work in the current edition of R.S. Means Company, Inc., Building Construction Cost Data as adjusted to local costs and conditions. The Consultant and the Owner may communicate directly with Subcontractors concerning costs of any Work included in a Construction Change Directive. If the Contractor disagrees with the method for the adjustment in the Contract Time, the adjustment and method shall be referred to the Consultant for determination, and any adjustment shall be limited to the change in the actual critical path of the Contractor's Construction Schedule directly caused thereby.

7.3.7 The amount of credit to be allowed by the Contractor to the Owner for a deletion or change which results in a net decrease in the Contract Sum shall be the largest of (1) the reasonable and prevailing value of the deletion or change; (2) the line item value in the Schedule of Values: or (3) the actual net cost as confirmed by the Consultant. When both additions and credits covering related Work or substitutions are involved in a change, the allowance for overhead and profit shall be figured on the basis of net increase, if any, with respect to that change.

7.3.8 Pending final determination of the total cost of a Construction Change Directive to the Owner and provided that any amounts not in dispute for such changes in the Work shall be included in Applications for Payment accompanied by a Change Order indicating the parties' agreement with part or all of such costs. If the Contractor adds a reservation of rights that has not been initialed b the Owner, all the amounts for the Construction Change Directive shall be considered disputed unless costs are renegotiated or the reservation is withdrawn or changed in a manner satisfactory to the Owner.

7.3.9 When the Owner and Contractor agree with the determination made by the Consultant concerning the adjustments in the Contract Sum and Contract Time, or otherwise reach agreement upon the adjustments, such agreement shall be effective immediately and shall be recorded by preparation and execution of an appropriate Change Order.

7.4 MINOR CHANGES IN THE WORK

7.4.1 The Consultant and the Owner will have authority to order minor changes in the Work not involving adjustment in the Contract Sum or extension of the Contract Time and not inconsistent with the intent of the Contract Documents. Such changes shall be effected by written order and shall be binding on the Owner and Contractor. The Contractor shall carry out any and all such written orders promptly. If at the option of the Owner, the Consultant exercises any authority, right(s) or duty(ies) stated anywhere in this Agreement or any other Contract Document as an authority, right or duty the Consultant may perform, the Contractor shall comply with, be bound by and respond therewith and thereto, including, but not limited to, the exercise of any authority, right(s) or duty(ies) related to minor work.

7.5 PRICING COMPONENTS

7.5.1 The total cost of any changed Work or of any other increase or decrease in the Contract Sum, including a Claim, shall be limited to the following components:

.1 Basic wages: The hourly wage (without markup, fringe benefits or labor burden) not to exceed that specified in the applicable “Intent to Pay Prevailing Wage” for the laborers, apprentices, journeymen, and foremen performing and/or directly supervising the changed Work on the site. The premium portion of overtime wages is not included unless pre-approved by the Owner.

.2 Fringe benefits: Fringe benefits paid by the Contractor as established by the Oregon Bureau of Labor and Industries or contributed to labor trust funds as itemized fringe benefits, whichever is applicable. Costs paid or incurred by the Contractor for vacations, per diem, bonuses, stock options, or discretionary payments to employees are not reimbursable.

.3 Workers’ insurances: Direct contributions to the State of Oregon as industrial insurance; medical aid; and supplemental pension by class and rates established by the Oregon Bureau of Labor and Industries.

.4 Federal insurances: Direct contributions required by the Federal Insurance Compensation Act (FICA); Federal Unemployment Tax Act (FUTA); and State Unemployment Compensation Act (SUCA).

7.5.2 Direct material costs: This is an itemization, including material invoice, of the quantity and cost of additional materials reasonable and necessary to perform the change in the Work. The unit cost shall be based upon the net cost after all discounts or rebates, freight costs, express charges, or special delivery costs, when applicable. No lump sum costs will be allowed except when approved in advance by the Consultant. Discounts and rebates based on prompt payment may be included, however, if the Contractor offers but the Owner declines the opportunity.

7.5.3 Construction equipment usage costs: This is an itemization of the actual length of time that construction equipment appropriate for the Work will be used solely on the change in the Work at the site times the applicable rental cost as established by the lower of the local prevailing rate published in The Rental Rate Blue Book by Data Quest, San Jose, California, or the actual rate paid to an unrelated third party as evidenced by rental receipts. Actual, reasonable mobilization costs are permitted if the equipment is brought to the Site solely for the change in the Work. If equipment is required for which a rental rate is not established by The Rental Rate Blue Book, an agreed rental rate shall be established for the equipment, which rate and use must be approved by the Consultant prior to performing the work. If more than one rate is applicable, the lowest rate will be utilized. The rates in effect at the time of the performance of the changed Work are the maximum rates allowable for equipment of modern design and in good working condition and include full compensation for furnishing all fuel, oil, lubrication, repairs, maintenance, and insurance. Equipment not of modern design and/or not in good working condition will have lower rates. Hourly, weekly, and/or monthly rates, as appropriate, will be applied to yield the lowest total cost. The rate for equipment necessarily standing by for future use on the changed Work shall be 50% of the rate established above. The total cost of rental allowed shall not exceed the cost of purchasing the equipment outright.

7.5.4 Cost of change in insurance or bond premium. This is defined as:

.1 Contractors' liability insurance: The cost (expressed as a percentage) of any changes in the Contractor's liability insurance arising directly from the changed Work; and

.2 Public works bond: The cost (expressed as a percentage) of the change in the Contractor's premium for the Contractor's bond arising directly from the changed Work. Upon request, the Contractor shall provide the Owner with supporting documentation from its insurer or surety of any associated cost incurred.

7.5.5 Subcontractor costs: These are payments the Contractor makes to Subcontractors for changed Work performed by Subcontractors. The Subcontractors' cost of changed Work shall be determined in the same manner as prescribed in this Paragraph 7.5.

7.5.6 Fee: This is the allowance for all combined overhead, profit and other costs, including all office, home office and site overhead (including project manager, project engineers, project foreman, estimator, superintendent and their vehicles), taxes (except for sales tax), warranty, safety costs, quality control/assurance, purchasing, small or hand tool or expendable charges, preparation of as-built drawings, impact on unchanged Work, Claim preparation, and delay and impact costs of any kind, added to the total cost to the Owner of any Change Order, Construction Change Directive, Claim or any other claim of any kind on this Project. It shall be limited in all cases to the following schedule:

.1 The Contractor shall receive 15% of the cost of any materials supplied or work properly performed by the Contractor's own forces.

.2 The Contractor shall receive 8% of the amount owed directly to a Subcontractor or Supplier for materials supplied or work properly performed by that Subcontractor or Supplier.

.3 Each Subcontractor of any tier shall receive 12% of the cost of any materials properly supplied or work properly performed by its own forces.

.4 Each Subcontractor of any tier shall receive 8% of the amount it properly incurs for materials supplied or work properly performed by its suppliers or subcontractors of any lower tier.

.5 The cost to which this Fee is to be applied shall be determined in accordance with Paragraph 7.5.1-7.5.4.

.6 The total summed Fee of the Contractor and all Subcontractors of any tier shall not exceed 25%. None of the fee percentages authorized in this Paragraph 7.5.6 may be compounded with any other fee percentage or percentages authorized in this paragraph.

If a change in the Work involves both additive and deductive items, the appropriate Fee allowed will be added to the net difference of the items. If the net difference is negative, no Fee will be added to the negative figure as a further deduction.

ARTICLE 8 TIME

8.1 DEFINITIONS

8.1.1 Unless otherwise provided, Contract Time is the period of time, including authorized adjustments, allotted in the Contract Documents for Substantial Completion of the Work.

8.1.2 The date of commencement of the Work is the date established in the Agreement.

8.1.3 The date of Substantial Completion is the date certified by the Consultant in accordance with Paragraph 9.8.

8.1.4 The term “day” as used in the Contract Documents shall mean calendar day unless otherwise specifically defined. Time is expressly declared of the essence as it relates to the performance of the Contractor’s Work. Without limiting the foregoing, Contractor must complete the Project in the manner required hereby on the date required hereby. The failure to so complete the Project shall cause the Owner to incur substantial costs and expenses, including, but not limited to, those related to staffing, teachers, management, transportation, publication, communication, signage, and rental, all of which costs and expenses the Contractor shall be liable for.

8.2 PROGRESS AND COMPLETION

8.2.1 Time limits stated in the Contract Documents are of the essence of the Contract. By executing the Agreement the Contractor confirms that the Contract Time is a reasonable period for performing the Work.

8.2.2 The Contractor shall not knowingly, except by agreement or instruction of the Owner in writing, prematurely commence operations on the site or elsewhere prior to the effective date of insurance required by Article II to be furnished by the Contractor and Owner. The date of commencement of the Work shall not be changed by the effective date of such insurance. The Contractor shall notify the Owner in writing not less than five days or other agreed period before commencing the Work.

8.2.3 The Contractor shall proceed expeditiously with adequate forces and shall achieve Substantial Completion and Final Completion within the Contract Time.

8.3 DELAYS AND EXTENSIONS OF TIME

8.3.1 If the Contractor is unreasonably delayed at any time .in the commencement or progress of the Work (1) by an act or neglect of the Owner or Consultant, or of an employee of either, or of a separate contractor employed by the Owner, or (2) by changes ordered in the Work only to the extent reflected in approved Change Orders providing for specific extensions of the Contract Time, or (3) b unanticipated, abnormal weather (see Paragraph 4.3.7), or (4) by unexpected industry-wide labor disputes, fire, unusual delay in deliveries, governmental delays (including permit delays not caused by the Owner), unavoidable casualties or other causes beyond the Contractor's control, or (5) by delay authorized by the Owner pending mediation and litigation, or (6) by other causes which the Consultant determines may justify delay, then the Contract Time shall be extended by Change Order for such reasonable time, limited to the change in the actual critical path of the Contractor's Construction Schedule directly caused thereby, as the Consultant may determine consistent with the provisions of the Contract Documents. In no event, however, shall the

Contractor be entitled to any extension of time absent proof of (1) delay to an activity on the critical path of the Contract Schedule, also as to actually delay the Project completion beyond the date of Substantial Completion, or (2) delay transforming an activity into the critical path of the Contract Schedule, so as to actually delay the Project completion beyond the date of Substantial Completion.

8.3.2 Claims relating to time shall be made in accordance with applicable provisions of Paragraphs 4.3 and 4.4. That the Owner or Consultant may be aware of the occurrence or existence of a delay through means other than the Contractor's written notification shall not constitute a waiver of a timely or written notice or Claim.

8.3.3 This Paragraph 8.3 does not preclude recovery of damages for delay by either party under other provisions of the Contract Documents.

.1 If the delay was not caused by the Owner, the Contractor, a Subcontractor of any tier, or the Consultant, or anyone acting on behalf of any of them, the Contractor is entitled only to an increase in the Contract Time in accordance with the Contract Documents, but not a change in the Contract Sum. If the delay was caused by the Contractor, a Subcontractor of any tier, or anyone acting on behalf of any of them, the Contractor is not entitled to an increase in the Contract Time or in the Contract Sum. The Contractor shall not recover damages, an equitable adjustment or an increase in the Contract Sum or Contract Time from the Owner where the Contractor could have reasonably avoided the delay by the exercise of due diligence. The Contractor shall be able to recover an increase in the Contract Sum, consistent with the terms of the Contract Documents, only if a delay in the critical path was unreasonable and caused by the Owner. A Subcontractor is not entitled to damages, an equitable adjustment or an increase in the Contract Sum for any delay that does not increase the Contract Time.

.2 In the event the Contractor (including any Subcontractors of any tier) is held to be entitled to damages from the Owner for delay beyond the payment permitted in Subparagraph 7.5.6, it is agreed that the total combined damages to the Contractor and any Subcontractors of any tier for each day of delay shall be limited to the same daily liquidated damage rate specified in the Contract Documents due the Owner for the Contractor's delay in achieving Substantial Completion. No damages will be allowed for any time prior to 14 days before receipt of written notice of the Claim of the delay pursuant to Subparagraph 4.4.2.

.3 The Contractor shall not in any event be entitled to damages arising out of actual or alleged loss of efficiency; morale, fatigue, attitude, or labor rhythm; constructive acceleration; home office overhead; expectant under run; trade stacking; reassignment of workers; rescheduling of work, concurrent operations; dilution of supervision; learning curve; beneficial or joint occupancy; logistics; ripple; season change; extended overhead; profit upon damages for delay; impact damages; or similar damages.

.4 The Contractor shall not be entitled to any adjustment in the Contract Time or in the Contract Sum, or to any additional payment of any sort, by reason of the loss or the use of any float time, including time between the Contractor's anticipated completion date and the end of the Contract Time, whether or not the float time is described as such on the Contractor's Construction Schedule.

ARTICLE 9 PAYMENTS AND COMPLETION

9.1 CONTRACT SUM

9.1.1 The Contract Sum is stated in the Agreement and, including authorized adjustments, is the total amount payable by the Owner to the Contractor for performance of the Work under the Contract

Documents.

9.2 SCHEDULE OF VALUES

9.2.1 Within seven (7) calendar days of the execution of this the Agreement and with each Application for Payment, the Contractor shall submit to the Consultant a schedule of values in a form satisfactory to the Consultant and Owner allocated to various portions of the Work, prepared in such form and supported by such data to substantiate its accuracy as the Consultant may require. This schedule, unless objected to by the Consultant or Owner, shall be used as a basis for reviewing the Contractor's Applications for Payment.

9.3 APPLICATIONS FOR PAYMENT

9.3.1 At least ten days before the date established for each progress payment, the Contractor shall submit to the Consultant an itemized Application for Payment for operations completed in accordance with the schedule of values. Such application shall be notarized and supported by such data substantiating the Contractor's right to payment as the Owner or Consultant may require, such as copies of requisitions from Subcontractors and material suppliers and reflecting Retainage if provided for in the Contract Documents.

9.3.1.1 As provided in Subparagraph 7.3.8, such applications may include requests for payment on account of changes in the Work which have been properly authorized by Construction Change Directives, or by interim determinations of the Consultant, but not yet included in Change Orders.

9.3.1.2 Such applications may not include requests for payment for portions of the Work for which the Contractor does not intend to pay to any Subcontractor including any material supplier.

9.3.2 Unless otherwise provided in the Contract Documents, payments shall be made on account of materials and equipment delivered and suitably stored at the site for subsequent incorporation in the Work. If approved in advance by the Owner, payment may similarly be made for materials and equipment suitably stored off the site at a location agreed upon in writing. Payment for materials and equipment stored on or off the site shall be conditioned upon compliance by the Contractor with procedures satisfactory to the Owner to establish the Owner's free and clear title to such materials and equipment or otherwise protect the Owner's interest, and shall include the costs of applicable insurance, storage and transportation to the site for such materials and equipment stored off the site.

9.3.3 The Contractor warrants that title to all Work covered by an Application for Payment will pass to the Owner no later than the time of payment. The Contractor further warrants that upon submittal of an Application for Payment all Work for which Certificates for Payment have been previously issued and payments received from the Owner shall, be free and clear of any and all liens, claims, security interests or encumbrances in favor of the Contractor, and any all Subcontractors, including any material suppliers, or other persons or entities making a claim by reason of having provided labor, materials and equipment relating to the Work.

9.4 CERTIFICATES FOR PAYMENT

9.4.1 The Consultant may, within seven (7) days after receipt of the Contractor's Application for Payment, either issue to the Owner a Certificate for Payment, with a copy to the Contractor, for such amount as the Consultant determines is properly due, or notify the Contractor and Owner in writing of the Consultant's reasons for withholding certification in whole or in part as provided in Subparagraph 9.5.1.

9.4.2 The issuance of a Certificate for Payment will constitute a representation by the Consultant to the Owner, based on the Consultant's evaluation of the Work and the data comprising the Application for Payment, that the Work has progressed to the point indicated and that, to the best of the Consultant's knowledge, information and belief, the quality of the Work is in accordance with the Contract Documents. The foregoing representations are subject to an evaluation of the Work for conformance with the Contract Documents upon Substantial Completion, to results of subsequent tests and inspections, to correction of minor deviations from the Contract Documents prior to completion and to specific qualifications expressed by the Consultant. However, the issuance of a Certificate for Payment will not be a representation that the Consultant has (I) made exhaustive or continuous on-site inspections to check the quality or quantity of the Work, (2) reviewed construction means, methods, techniques, sequences or procedures, (3) reviewed copies of requisitions received from Subcontractors and material suppliers and other data requested by the Owner to substantiate the Contractor's right to payment, or (4) made examination to ascertain how or for what purpose the Contractor has used money previously paid on account of the Contract Sum.

9.5 DECISIONS TO WITHHOLD CERTIFICATION

9.5.1 The Consultant may withhold a Certificate for Payment in whole or in part, to the extent reasonably necessary to protect the Owner, if, in the Consultant's opinion the representations to the Owner required by Subparagraph 9.4.2 cannot be made. If the Consultant is unable to certify payment in the amount of the Application, the Consultant may notify the Contractor and Owner as provided in Subparagraph 9.4. I. If the Contractor and Consultant cannot agree on a revised amount, the Consultant may promptly issue a Certificate for Payment for the amount for which the Consultant is able to make such representations to the Owner. The Consultant may also withhold a Certificate for Payment or, because of subsequently discovered evidence, may nullify the whole or a part of a Certificate for Payment previously issued, to such extent as may be necessary in the Consultant's opinion to protect the Owner from loss for which the Contractor is responsible, including loss resulting from acts and omissions described in Subparagraph 3.3.2, because of:

.1 defective Work not remedied;

.2 third party claims filed or reasonable evidence indicating probable filing of such claims unless security is acceptable to the Owner is provided by the Contractor;

.3 failure of the Contractor to make payments properly to Subcontractors or for labor, materials or equipment;

.4 reasonable evidence that the Work cannot be completed for the unpaid balance of the Contract Sum;

.5 damage to the Owner or another contractor;

.6 reasonable evidence that the Work will not be completed within the Contract Time, and that the unpaid balance would not be adequate to cover actual or liquidated damages for the anticipated delay; or

.7 Any other failure to comply with the Contract Documents or Contractor's persistent failure to carry out the Work in accordance with the Contract Documents.

9.5.2 When the above reasons for withholding certification are removed, certification will be made for amounts previously withheld.

9.6 PROGRESS PAYMENTS

9.6.1 After the Consultant has received all the necessary documents and properly issued a Certificate for Payment, the Owner shall make payment in the manner and within the time provided in the Contract Documents and may so notify the Consultant.

9.6.2 If not done previously, The Contractor shall promptly pay each Subcontractor, upon receipt of payment from the Owner, out of the amount paid to the Contractor on account of such Subcontractor's portion of the Work, the amount to which said Subcontractor is entitled, reflecting percentages actually retained from payments to the Contractor on account of such Subcontractor's portion of the Work. The Contractor shall, by appropriate agreement with each Subcontractor, require each Subcontractor to make payments to Sub-subcontractors in a similar manner.

9.6.3 The Consultant or Owner may on request, furnish to any Subcontractors or any other person or entity, if practicable, information regarding percentages of completion or amounts applied for by the Contractor and action taken thereon by the Consultant and Owner on account of portions of the Work done by such Subcontractor.

9.6.4 Neither the Owner nor Consultant shall have an obligation to pay nor to see to the payment of money to a Subcontractor except as may otherwise be required by law.

9.6.5 Payment to material suppliers shall be treated in a manner similar to that provided for Subcontractors because by the definitions of this Agreement they are a Subcontractor.

9.6.6 A Certificate for Payment, a progress payment, or partial or entire use or occupancy of the Project by the Owner shall not constitute acceptance of Work not in accordance with the Contract Documents.

9.6.7 Payments received by the Contractor for Work properly performed by Subcontractors and suppliers shall be held by the Contractor for those Subcontractors or suppliers who performed Work or furnished materials, or both, under contract with the Contractor for which payment was made by the Owner. Nothing contained herein shall require money to be placed in a separate account and not commingled with money of the Contractor, shall create any fiduciary liability or tort liability on the part of the Contractor for breach of trust or shall entitle any person or entity to an award of punitive damages against the Contractor for breach of the requirements of this provision.

9.7 FAILURE OF PAYMENT

9.7.1 If the Consultant does not issue a Certificate for Payment, through no fault of the Contractor, within seven days after receipt of the Contractor's Application for Payment, or if the Owner does not pay the Contractor within seven days after the date established in the Contract Documents the amount certified by the Consultant or awarded by arbitration, then the Contractor may, upon seven additional days' written notice to the Owner and Consultant, stop the Work until payment of the amount owing has been received. The Contract Time shall be extended appropriately, and the Contract Sum shall be increased by the amount of the Contractor's reasonable costs of shut-down, delay and start-up, plus interest as provided for in the Contract Documents.

9.8 SUBSTANTIAL COMPLETION

9.8.1 Substantial Completion is the stage in the progress of the Work, or portion thereof designated and approved by the Consultant and Owner, when the Work or designated portion thereof is sufficiently

complete in accordance with the Contract Documents so that the Owner can fully occupy and utilize the Work, or designated portion thereof, for its intended use. All Work other than incidental corrective or punch list work and final cleaning shall have been completed, including but not limited to the following:

.1 Obtain temporary occupancy permits, pressure vessel permits, elevator permits, and similar approvals or certificates by governing authorities and franchised services, assuring the Owner's full access and use of completed Work.

.2 Submit the Contractor's punch list of items to be completed or corrected and written request for inspection.

.3 Complete final start-up, testing, and commence instruction and training sessions on all major building systems, including HVAC and controls, intercom, data communications, fire alarm, telephone, fire sprinkler, security and clocks.

.4 Make final changeover of locks and transmit new keys to the Owner, and advise the Owner of the changeover in security provisions.

.5 Discontinue or change over and remove temporary facilities and services from the project site.

.6 Advise the Owner on coordination of shifting insurance coverages, including proof of extended coverages as required.

The Work is not Substantially Complete unless the Consultant reasonably judges that the Work can achieve Final completion within 60 days, appropriate cleaning has occurred, all systems and parts are commissioned and usable, including balancing of the HVAC system, utilities are connected and operating normally, all required temporary occupancy permits have been issued and the work is accessible by normal vehicular and pedestrian traffic routes. The fact that the owner may occupy the Work or a designated portion thereof does not indicate that the work is Substantially Complete or is acceptable in whole or in part, nor does such occupation toll or change any liquidated damages due the Owner.

9.8.1.2 Date of commissioning of Critical Systems. The following systems of the Work, and any other systems designated in the Contract Documents, are considered "Critical Systems": the HVAC system, the data communication system(s), the intercom system, the life safety system(s) and the security system. When the Contractor considers that the Critical Systems are up and running and ready for normal operation as specified for each phase, the Contractor shall so notify the Consultant in writing a minimum of 14 days prior to the Date of Substantial Completion for that portion or phase as fixed in the contract Documents. The Consultant will then schedule a pre-commissioning inspection of these systems to determine whether the Critical Systems are complete and ready for normal operation. If the Consultant's inspection discloses that the Critical Systems are not Substantially Complete or that any item which is not in accordance with the requirements of the Contract Documents, the Contractor shall expeditiously, and before the Date of Commissioning, complete or correct such item upon notification by the Consultant. The Contractor shall then submit a request for another inspection by the Consultant to determine completion of the Critical Systems and pay the costs associated with the re-inspection, including fees of the Consultant and its consultants. When the Critical Systems are complete, the Consultant will notify the Owner in writing, which shall establish the Date of Commissioning. Warranties on the Critical Systems required by the Contract Documents shall commence on the Date of Commissioning, unless otherwise provided. The Date of Commissioning shall not have an effect on the duties of the parties at Substantial Completion.

9.8.1.3 Indemnification. The Contractor shall defend, indemnify, and hold harmless the Owner and the Consultant and their agents, employees, and consultants, successors and assigns from and against all claims, damages, losses and expenses of third parties, direct and indirect, or consequential, including costs, design professional fees, and attorneys' fees incurred by the owner related to such claims and in proving the right to indemnification, arising out of or resulting from the failure of the Contractor to attain the Date of Commissioning less than 30 days prior to the Date of Substantial Completion fixed by the Contract Documents. In particular, the Contractor acknowledges that a 30-day period after the Date of Commissioning and prior to occupancy is specified during which the HVAC system is scheduled to operate under a procedure intended to dissipate out-gassing that may occur from interior and other materials.

9.8.2 When the Contractor considers that the Work, or a portion thereof which the Owner agrees to accept separately, is substantially complete, the Contractor shall prepare and submit to the Consultant and Owner a comprehensive list of items to be completed or corrected prior to final payment. The Contractor shall proceed promptly to complete and correct all items on the list. Failure to include an item on such list does not alter the responsibility of the Contractor to complete all Work in accordance with the Contract Documents.

9.8.3 Upon receipt of the Contractor's list, the Consultant and the Owner will make an inspection to determine whether the Work or designated portion thereof is substantially complete. If the Consultant's inspection discloses any item, whether or not included on the Contractor's list, which is not sufficiently complete in accordance with the Contract Documents so that the Owner can occupy and utilize the Work or designated portion thereof for its intended use, the Contractor shall, before issuance of the Certificate of Substantial Completion, complete or correct such item upon notification by the Consultant or Owner. In such case, the Contractor shall then submit a request for another inspection by the Consultant to determine Substantial Completion. If the Owner or Consultant determines that the Work or designated portion is not substantially complete, then the contractor shall expeditiously complete the Work or designated portion, request another inspection and pay all costs associated with any re-inspection.

9.8.4 When the Work or designated portion thereof is substantially complete, the Consultant may prepare a Certificate of Substantial Completion which, upon approval of the Owner, may establish the date of Substantial Completion, shall establish responsibilities of the Owner and Contractor for security, maintenance, heat, utilities, damage to the Work and insurance, and shall fix the time within which the Contractor shall finish all items on the list accompanying the Certificate. Warranties required by the Contract Documents shall commence on the date of Substantial Completion of the Work or designated portion thereof unless otherwise provided in the Certificate of Substantial Completion. The Contractor shall attach and submit with the executed Certificate or Substantial Completion a written list of each outstanding and unresolved Claim; any Claim not so submitted and identified, other than Retainage and the undisputed balance of the Contract Sum, shall be deemed waived and abandoned. If the Owner or Consultant determines that the Work or designated portion is not substantially complete, the Contractor shall expeditiously complete the Work or designated portion, again request an inspection, and pay the costs associated with the re-inspection, including Consultant and consultant fees.

9.8.5 The Certificate of Substantial Completion shall be submitted to the Owner and Contractor for their written acceptance of responsibilities assigned to them in such Certificate. Any items not included by the Consultant but required or necessary for Final Completion of the Contract shall be supplies and installed by the Contractor as a part of the Contract Sum, notwithstanding their not being recorded by the Consultant. Upon written acceptance of the Certificate of Substantial Completion and upon the Contractor's application, the Owner shall make payment as provided in the Contract Documents. Such payment shall be adjusted for Work that is incomplete or not in accordance with the requirements of the Contract Documents. No further payment will be due or owing until the payment at Final Completion.

9.8.6 The Contractor shall prepare, continue to monitor with the Consultant, and cause to be completed, all punch lists with respect to the activity of each Subcontractor and report weekly to the Owner on outstanding punch list items. Beginning 90 days before the scheduled date of Substantial Completion, the Contractor shall prepare reports weekly, identifying items to be competed in order to obtain temporary and permanent certificates of occupancy and make recommendations to the Owner with respect to effectuating the earliest possible completion.

9.9 PARTIAL OCCUPANCY OR USE

9.9.1 The Owner may occupy or use any completed or partially completed portion of the Work at any stage when such portion is designated by separate agreement with the Contractor, provided such occupancy or use is consented to by the insurer as required under Clause 11.3.1.5 and authorized by public authorities having jurisdiction over the Work. Such partial occupancy or use may commence whether or not the portion is substantially complete, provided the Owner and Contractor have accepted in writing the responsibilities assigned to each of them for payments, Retainage, if any, security, maintenance, heat, utilities, damage to the Work and insurance, and have agreed in writing concerning the period for correction of the Work and commencement of warranties required by the Contract Documents. When the Contractor considers a portion substantially complete, the Contractor shall prepare and submit a list to the Consultant and Owner as provided under Subparagraph 9.8.2. Consent of the Contractor to partial occupancy or use shall not be unreasonably withheld. The stage of the progress of the Work shall be determined by written agreement between the Owner and Contractor or, if no agreement is reached, by decision of the Consultant.

9.9.2 Immediately prior to such partial occupancy or use, the Owner and Contractor shall, and Consultant may, jointly inspect the area to be occupied or portion of the Work to be used in order to determine and record the condition of the Work.

9.9.3 Unless otherwise agreed upon, partial occupancy or use of a portion or portions of the Work shall not constitute acceptance of Work not complying with the requirements of the Contract Documents.

9.10 FINAL COMPLETION AND FINAL PAYMENT

9.10.1 FINAL COMPLETION.

9.10.1.1 If, at thirty (30) days after the Date of Substantial Completion, the Owner considers that the punch list items are unlikely to be completed within sixty (60) days of Substantial Completion, the Owner may, upon seven (7) days' written notice to the contractor, take over and perform some or all of the punch list items. If the Contractor fails to correct the deficiencies within the period required, the Owner may deduct the actual cost of performing this punch list work, including costs, plus 10% to account for the Owner's transaction costs from the Contract Sum.

9.10.1.2 Upon receipt of written notice from the Contractor that the Work is ready for final inspection and acceptance, the Consultant may promptly make such inspection accompanied by the Contractor and, when the Consultant finds all punch list items fully completed and the Work acceptable under the Contract Documents and the Contract fully performed, the Consultant may promptly notify the Contractor and the Owner in writing that to the best of the Consultant's knowledge, information and belief, and on the basis of the Consultant's on-site visits and inspections, the Work has been completed in accordance with terms and conditions of the Contract Documents. If the Consultant determines that some or all of the punch list items are not fully completed, then the Contractor shall be responsible to the Owner for all costs, including re-inspection fees, associated with any subsequent Consultant's inspection. The Consultant's final Certificate for Payment will constitute a further representation that conditions listed in Subparagraph 9.10.2 as

precedent to the Contractor's being entitled to final payment have been fulfilled.

9.10.1.3 The Contractor is liable for, and the Owner may deduct from any amounts due the Contractor, all Consultant, architect, engineer or other design consultant fees incurred by the Owner for services performed more than 60 days after Substantial Completion of all the Work, whether or not those services would have been performed prior to that date had Final Completion been achieved in a timely manner.

9.10.1.4 When the Consultant finds that the Work has been concluded, a final occupancy permit has been issued, and the Contractor has submitted all the items in Subparagraph 9.10.2.1 to the Consultant, the Contractor may submit a final Application for Payment. The Consultant will then promptly issue a final Certificate for Payment stating that the entire balance found to be due the Contractor and noted in said final Certificate is due and payable. The Consultant's final Certificate for Payment shall establish the date of Final Completion upon its execution by the Owner.

9.10.1.5 "Final Completion" will be attained when the Contractor has accomplished the following:

.1 Complete all requirements listed in Paragraph 9.8 for Substantial Completion.

.2 Complete all remaining punch list items, notify Consultant and Owner that all work is complete.

.3 Obtain permanent occupancy permits.

.4 Submit final change order and final Application for Payment.

.5 Submit recorded documents, final property survey, and operation and maintenance manuals.

.6 Deliver tools, spare parts, extra stock of material and similar physical items to the Owner.

.7 Complete final cleaning.

.8 Complete instruction and train in sessions on all major building systems including HVAC, intercom data communications, fire alarm, telephone, fire sprinkler, security and clocks.

9.10.2 FINAL ACCEPTANCE AND PAYMENT

9.10.2.1 Final payment shall not become due until after the Owner's Board of Directors has formally accepted the Project "Final Acceptance". To achieve Final Acceptance, the Consultant must have issued a final Certificate of Payment under Subparagraph 9.10.1, Final Completion must have occurred, and the Contractor must have submitted to the Consultant the following:

.1 an affidavit that any and all payrolls, bills for materials and equipment, and other indebtedness connected with the Work for which the Owner or the Owner's property might be responsible or encumbered (less amounts withheld by Owner) have been paid or otherwise satisfied together with full and final unconditional waivers by the Contractor and all Subcontractors in a form and with content acceptable to the Owner, except for any Subcontractor claims that are specifically identified on the affidavit,

.2 a certificate evidencing that insurance required by the Contract Documents to remain in force after final payment is currently in effect and will not be canceled or allowed to expire until at least 30 days' prior written notice has been given to the Owner,

.3 a written statement that the Contractor knows of no substantial reason that the insurance will not be renewable to cover the period required by the Contract Documents,

.4 consent of surety, if any, to final payment,

.5 other data establishing payment or satisfaction of or protection against obligations, such as receipts, releases and waivers of liens, claims, security interests or encumbrances arising out of the Contract, to the extent and in such form as may be designated by the Owner. If a Subcontractor refuses to furnish a release or waiver required by the Owner, the Contractor shall furnish a bond satisfactory to the Owner to indemnify the Owner against such lien or cash deposit off such lien or claim whichever the Owner may request. Such cash deposit shall be paid with the Contractor's own funds. If such lien remains unsatisfied after payments are made, the Contractor shall refund to the Owner all money that the Owner may be compelled to pay in discharging such lien, including all costs and reasonable attorneys' fees,

.6 an “Affidavit of Wages” from the Contractor and each Subcontractor of every tier certified by all required governmental authorities.

.7 a letter from the Consultant indicating that the Work is complete and recommending Final Acceptance of the Project by the Owner.

.8 certification that all materials in the Work are "lead-free" and "asbestos-free," and

.9 all warranties, guarantees, training manuals, operation instructions, certificates, spare parts, maintenance stock, specified excess material, as-built drawings and other documents or items required by the Contract Documents or local governmental entities.

9.10.3 If, after Substantial Completion of the Work, final completion thereof is materially delayed through no fault of the Contractor, and the Consultant so confirms, the Owner shall, upon application by the Contractor and certification by the Consultant, and without terminating the Contract, make payment of the balance due for that portion of the Work fully completed and accepted to the extent permitted by statute. If the remaining balance for Work not fully completed or corrected is less than Retainage stipulated in the Contract Documents, and if bonds have been furnished, the written consent of surety to payment of the balance due for that portion of the Work fully completed and accepted shall be submitted by the Contractor to the Consultant prior to certification of such payment. Such payment shall be made under terms and conditions governing final payment, except that it shall not constitute a waiver of claims.

9.10.4 If a Subcontractor of any tier or supplier refuses to furnish a release or waiver required by the Owner the Owner may (a) retain in the fund, account, or escrow funds in such amount as to defray the cost of foreclosing the liens of such claims and to pay attorneys’ fees, the total of which shall be no less than 150% of the claimed amount, or (b) accept a bond from the Contractor, satisfactory to the owner, to indemnify the Owner against such lien. If any such lien remains unsatisfied after all payments from the Retainage are made, the Contractor shall refund to the Owner all moneys that the Owner may be compelled to pay in discharging such lien, including all costs and reasonable attorneys’ fees.

9.10.5 Release of Retainage. Retainage will be held and applied by the Owner as required by law. Release of Retainage will be processed in the ordinary course of business upon expiration of sixty (60) days following Final Acceptance of the Work by the Owner provided that no notice of lien shall have been given as provided by law, and that no claims have been brought to the attention of the Owner and that the Owner has no

claims under this Contract.

9.10.6 WAIVER OF CLAIMS

9.10.6.1 Final Payment by Owner. The making of final payment shall not constitute a waiver of any Claims by the Owner.

9.10.6.2 Final Payment to Contractor. Acceptance of final payment by the Contractor, or any Subcontractors including but not limited to any material supplier shall constitute a waiver of claims by that payee except those previously timely made in writing delivered to the Owner, Consultant and identified by that payee as unsettled and attached to Contractor's final Application for Payment.

9.10.6.3 Change Orders. The execution of a Change Order shall constitute a waiver of Claims by the Contractor arising out of the Work to be performed or deleted pursuant to the Change Order, except as specifically described in the Change Order. Reservations of rights will be deemed waived and are void unless the reserved rights are specifically described in detail to the satisfaction of the Owner and are initialed by the Owner.

9.10.7 The Contractor shall maintain books, ledgers, records, documents, estimates, correspondence, logs, electronic data and other evidence pertaining to the costs incurred by the Contractor in connection with or related to the Contract ("records") to such extent and in such detail as will property reflect and fully support compliance with requirements of the Contract Documents and with all costs, charges and other amounts of whatever nature under the contract. The Contractor shall preserve such records for a period of three (3) years following the date of Final Acceptance under the contract and for such longer period as may be required by any other provision of the contract. Within seven (7) days of the Owner's requires, the Contractor agrees to make available at the office of the Contractor during normal business hours all records for inspection, audit and reproduction by the Owner or its representatives. These requirements shall be applicable to each Subcontractor of any tier and included in each Subcontract and purchase order issued with respect to the Work, except fixed-price Subcontracts where the price is $25,000 or less.

ARTICLE 10 PROTECTION OF PERSONS AND PROPERTY

10.1 SAFETY PRECAUTIONS AND PROGRAMS

10.1.1 The Contractor shall use best efforts and shall be responsible for initiating, maintaining and supervising all safety precautions and programs in connection with the performance of the Contract.

10.2 SAFETY OF PERSONS AND PROPERTY

10.2.1 The Contractor shall use best efforts to take precautions for safety of, and provide protection to prevent damage, injury or loss to:

.1 employees on the Work and other persons who may be affected thereby;

.2 the Work and materials and equipment to be incorporated therein, whether in storage on or off the site, under care, custody or control of the Contractor or the Contractor's Subcontractors or Sub-subcontractors; and

.3 other property at the site or adjacent thereto, such as trees, shrubs, lawns, walks, pavements, roadways, structures and utilities not designated for removal, relocation or

replacement in the course of construction.

10.2.2 The Contractor shall give notices and comply with applicable laws, ordinances, rules, regulations and lawful orders of public authorities bearing on safety of persons or property or their protection from damage, injury or loss.

10.2.3 The Contractor shall use best efforts to erect and maintain, as required by existing conditions and performance of the Contract, safeguards for safety and protection, including posting danger signs and other warnings against hazards, promulgating safety regulations and notifying owners and users of adjacent sites and utilities and to protect adjacent property and improvements from any damage. Any damage to such property or improvements shall be promptly remedied at Contractor's sole cost and expense.

10.2.4 When use or storage of explosives or other hazardous materials or equipment or unusual methods are necessary for execution of the Work, the Contractor shall exercise utmost care and carry on such activities under supervision of properly qualified personnel and notify the Owner and Consultant in advance to such storage. To the extent that Owner's Operations limit the use or storage of explosives or other hazardous materials or equipment they shall not be used or stored at the Project.

10.2.5 The Contractor shall promptly remedy damage and loss (other than damage or loss insured under property insurance required by the Contract Documents) to property referred to in Clauses 10.2.1.2 and 10.2.1.3 caused in whole or in part by the Contractor, any Subcontractors, a Sub-subcontractor, or anyone directly or indirectly employed by any of them, or by anyone for whose acts they may be liable and for which the Contractor is responsible under Clauses 10.2.1.2 and 10.2.1.3, except damage or loss attributable to acts or omissions of the Owner or Consultant or anyone directly or indirectly employed by either of them, or by anyone for whose acts either of them may be liable, and not attributable to the fault or negligence of the Contractor. The foregoing obligations of the Contractor are in addition to the Contractor's obligations under Paragraph 3.18.

10.2.6 The Contractor shall designate a responsible member of the Contractor's organization at the site whose duty shall be the prevention of accidents. This person shall be the Contractor's superintendent unless otherwise designated by the Contractor in writing to the Owner and Consultant.

10.2.7 The Contractor shall not load or permit any part of the construction or site to be loaded so as to endanger its safety.

10.2.8 Contractor shall specifically comply with any and all laws, rules and regulations related to hazardous materials (including without limitation asbestos) and hazardous material abatement including by not limited to those relating to contracting and the performance of such work.

10.3 HAZARDOUS MATERIALS

10.3.1 If reasonable precautions will be inadequate to prevent foreseeable bodily injury or death to persons resulting from a material or substance, including but not limited to asbestos, encountered on the site by the Contractor, the Contractor shall, upon recognizing the condition, immediately stop Work in the affected area and promptly report the condition to the Owner and Consultant in writing. By executing this Contract, Contactor represents and warrants that it has no knowledge of any material or substance which would give rise to any obligation of the Owner under any provision of 10.3.

10.3.2 The Owner shall obtain the services of a licensed laboratory to verify the presence or absence of the material or substance reported by the Contractor and, in the event such material or substance is found

to be present, to verify that it has been rendered harmless. Unless otherwise required by the Contract Documents, the Owner shall furnish in writing to the Contractor and Consultant the names and qualifications of persons or entities who are to perform tests verifying the presence or absence of such material or substance or who are to perform the task of removal or safe containment of such material or substance. The Contractor and the Consultant will promptly reply to the Owner in writing stating whether or not either has reasonable objection to the persons or entities proposed by the Owner. If either the Contractor or Consultant has an objection to a person or entity proposed by the Owner, the Owner shall propose another to whom the Contractor and the Consultant have no reasonable objection. When the material or substance has been rendered harmless, Work in the affected area shall resume upon written agreement of the Owner and Contractor. The Contract Time shall be extended appropriately, and the Contract Sum shall be increased in the amount of the Contractor's reasonable additional costs of shut-down, delay and start-up, which adjustments shall be accomplished as provided in Article 7.

10.4 The Owner shall not be responsible under Paragraph 10.3 for materials and substances brought to the site by the Contractor.

10.5 EMERGENCIES

10.5.1 In an emergency affecting safety of persons or property, the Contractor shall act, at the Contractors discretion, to prevent threatened damage, injury or loss. Additional compensation or extension of time claimed by the Contractor on account of an emergency shall be determined as provided in Paragraph 4.3.

ARTICLE 11 INSURANCE AND BONDS

11.1 CONTRACTOR'S LIABILITY INSURANCE

11.1.1 The Contractor shall purchase from and maintain in a company or companies lawfully authorized to do business in the jurisdiction in which the Project is located such insurance as will protect the Contractor from claims set forth below which may arise out of or result from the Contractor's operations under the Contract and for which the Contractor may be legally liable, whether such operations be by the Contractor or by any Subcontractors, or by anyone directly or indirectly employed by any of them, or by anyone for whose acts any of them may be liable:

.1 claims under workers' compensation, disability benefit and other similar employee benefit acts which are applicable to the Work to be performed;

.2 claims for damages because of bodily injury, occupational sickness or disease, or death of the Contractor's employees;

.3 claims for damages because of bodily injury, sickness or disease, or death of any person other than the Contractor's employees;

.4 claims for damages insured by usual personal injury liability coverage;

.5 claims for damages, other than to the Work itself, because of injury to or destruction of tangible property, including loss of use resulting therefrom;

.6 claims for damages because of bodily injury, death of a person or property damage arising out of ownership, maintenance or use of a motor vehicle;

.7 claims for bodily injury or property damage arising out of completed operations; and

.8 claims involving contractual liability insurance applicable to the Contractor's obligations under Paragraph 3.18.

11.1.2 The insurance required by Subparagraph 11.1.1 shall be written for not less than limits of liability specified in the Contract Documents or required by law, whichever coverage is greater. Coverage's, whether written on an occurrence or claims-made basis, shall be maintained without interruption from date of commencement of the Work until date of final payment and termination of any coverage required to be maintained after final payment.

11.1.3 Certificates of insurance acceptable to the Owner shall be filed with the Owner prior to commencement of the Work. These certificates and the insurance policies required by this Paragraph 11.1 shall contain a provision that coverages afforded under the policies will not be canceled or allowed to expire until at least 30 days' prior written notice has been given to the Owner. If any of the foregoing insurance coverages are required to remain in force after final payment and are reasonably available, an additional certificate evidencing continuation of such coverage shall be submitted with the final Application for Payment as required by Subparagraph 9.10.2. Information concerning reduction of coverage on account of revised limits or claims paid under the General Aggregate, or both, shall be furnished by the Contractor with reasonable promptness in accordance with the Contractor's information and belief.

11.2 PROJECT MANAGEMENT PROTECTIVE LIABILITY INSURANCE

11.2.1 The Owner may also in addition to or in the alternative require the Contractor to purchase and maintain Project Management Protective Liability insurance from the Contractor's usual sources as primary coverage for the Owner's, Contractor's and Consultant's vicarious liability for construction operations under the Contract. Unless otherwise required by the Contract Documents, the Owner shall reimburse the Contractor by increasing the Contract Sum to pay the cost of purchasing and maintaining such optional insurance coverage and the Contractor shall not be responsible for purchasing any other liability insurance on behalf of the Owner. The minimum limits of liability purchased with such coverage shall be equal to the aggregate of the limits required for Contractor's Liability Insurance under Clauses 11.1.1.2 through 11.1.1.5.

11.2.2 To the extent damages are covered by Project Management Protective Liability insurance, the Owner, Contractor and Consultant waive all rights against each other for damages, except such rights as they may have to the proceeds of such insurance. The policy shall provide for such waivers of subrogation by endorsement or otherwise.

11.2.3 The Owner may require the Contractor to include the Owner, Owners Representative, Consultant or any other persons or entities as additional insureds on the Contractor's Liability Insurance coverage under Paragraph 11.1 or as set out elsewhere in the Contract Documents.

11.3 PROPERTY INSURANCE

11.3.1 Unless otherwise provided, the Owner shall purchase and maintain, in a company or companies lawfully authorized to do business in the jurisdiction in which the Project is located, property insurance written on a builder's risk "all-risk" or equivalent policy form in the amount of the initial Contract Sum, plus value of subsequent Contract modifications and cost of materials supplied or installed by others, comprising total value for the entire Project at the site on a replacement cost basis without optional deductibles. Such property insurance shall be maintained, until final payment has been made as provided in Paragraph 9.10 or until no person or entity other than the Owner has an insurable interest in the property required by this

Paragraph 11.3 to be covered, whichever is later. This insurance shall include interests of the Owner, the Contractor, Subcontractors and Sub-subcontractors in the Project.

11.3.1.1 Property insurance may be on an "all-risk" or equivalent policy form and shall include, without limitation, insurance against the perils of fire (with extended coverage) and physical loss or damage including, without duplication of coverage, theft, vandalism, malicious mischief, collapse, earthquake, flood, windstorm, false work, testing and startup, temporary buildings and debris removal including demolition occasioned by enforcement of any applicable legal requirements, and may cover reasonable compensation for Consultant's and Contractor's services and expenses required as a result of such insured loss.

11.3.1.2 If the Owner does not intend to purchase such insurance the Owner shall so inform the Contractor. The Contractor may, then following 14 days prior written notice to the Owner by the Contractor effect such insurance which will protect the interests of the Owner, Contractor, Subcontractors and Sub-subcontractors in the Work, and if approved by the Owner in its discretion and in writing before the purchase thereof the costs thereof may be charged to the Owner.

11.3.1.3 If the property insurance requires deductibles, the Owner need not pay costs not covered because of such deductibles and they shall be paid by Contractor.

11.3.1.4 This property insurance, if any may at the Owner's option cover portions of the Work stored off the site, and also portions of the Work in transit.

11.3.1.5 Partial occupancy or use in accordance with Paragraph 9.9 may commence absent the insurance company or companies providing property insurance having consented to such partial occupancy or use by endorsement or otherwise.

11.3.2 Loss of Use Insurance. The Owner, at the Owner's option, may purchase and maintain such insurance as will insure the Owner against loss of use of the Owner's property due to fire or other hazards, however caused.

11.3.3 If during the Project construction period the Owner insures properties, real or personal or both, at or adjacent to the site by property insurance under policies separate from those insuring the Project, or if after final payment property insurance is to be provided on the completed Project through a policy or policies other than those insuring the Project during the construction period, the Owner shall waive all rights in accordance with the terms of Subparagraph 11.3.5 for damages caused by fire or other causes of loss covered by this separate property insurance. All separate policies shall provide this waiver of subrogation by endorsement or otherwise.

11.3.4 Before an exposure to loss may occur, the Owner shall file with the Contractor a copy of each policy that includes insurance coverage’s required by this Paragraph 11.3. Each policy shall contain all generally applicable conditions, definitions, exclusions and endorsements related to this Project. Each policy shall contain a provision that the policy will not be canceled or allowed to expire, and that its limits will not be reduced, until at least 30 days' prior written notice has been given to the Contractor.

11.3.5 Waivers of Subrogation. The Owner and Contractor waive all rights against (1) each other and any of their subcontractors, sub-subcontractors, agents and employees, each of the other, and (2) the Consultant, Consultant's consultants, separate contractors described in Article 6, if any, and any of their subcontractors, sub-subcontractors, agents and employees, for damages caused by fire or other causes of loss to the extent covered by property insurance obtained pursuant to this Paragraph 11.3 or other property insurance applicable to the Work, except such rights as they have to proceeds of such insurance held by

the Owner as fiduciary. The Owner or Contractor, as appropriate, shall require of the Consultant, Consultant's consultants, separate contractors described in Article 6, if any, and the subcontractors, sub-subcontractors, agents and employees of any of them, by appropriate agreements, written where legally required for validity, similar waivers each in favor of other parties enumerated herein. The policies shall provide such waivers of subrogation by endorsement or otherwise. A waiver of subrogation shall be effective as to a person or entity even though that person or entity would otherwise have a duty of indemnification, contractual or otherwise, did not pay the insurance premium directly or indirectly, and whether or not the person or entity had an insurable interest in the property damaged.

11.3.6 A loss insured under Owner's property insurance shall be adjusted by the Owner as fiduciary and made payable to the Owner as fiduciary for the insureds, as their interests may appear, subject to requirements of any applicable mortgagee clause and of Subparagraph 11.3.7. The Contractor shall pay Subcontractors their just shares of insurance proceeds received by the Contractor, and by appropriate agreements, written where legally required for validity, shall require Subcontractors to make payments to their Sub-subcontractors in similar manner.

11.3.7 The Owner as fiduciary shall have power to adjust and settle a loss with insurers unless one of the parties in interest shall object in writing within five days after occurrence of loss to the Owner's exercise of this power; if such objection is made, the dispute shall be resolved as provided in Paragraphs 4.5 and 4.6. The Owner as fiduciary shall, in the case of arbitration, make settlement with insurers in accordance with directions of the arbitrators. If distribution of insurance proceeds by arbitration is required, the arbitrators will direct such distribution.

11.4 PERFORMANCE BOND AND PAYMENT BOND

11.4.1 The Owner shall have the right to require the Contractor to furnish bonds covering faithful performance of the Contract and payment of obligations arising thereunder as stipulated in bidding requirements or specifically required in any of the Contract Documents.

11.4.2 Upon the request of any person or entity appearing to be a potential beneficiary of bonds covering payment of obligations arising under the Contract, the Contractor shall promptly furnish a copy of the bonds or shall permit a copy to be made.

ARTICLE 12 UNCOVERING AND CORRECTION OF WORK

12.1 UNCOVERING OF WORK

12.1.1 If a portion of the Work is covered contrary to the Consultant's or Owner's request or to requirements specifically expressed in the Contract Documents, it must, if required in writing by the Consultant or Owner, be uncovered for the Consultant's or Owner's observation or examination and be replaced at the Contractor's expense without change in the Contract Time.

12.1.2 If a portion of the Work has been covered which the Consultant or Owner has not specifically requested to examine prior to its being covered, the Consultant or Owner may request to see such Work and it shall be uncovered by the Contractor. If such Work is in full and strict accordance with the Contract Documents, costs of uncovering and replacement shall, by appropriate Change Order, be at the Owner's expense. If such Work is not in full and strict accordance with the Contract Documents, correction shall be at the Contractor's sole expense unless the condition was caused by the Owner or a separate contractor in which event the Owner shall be responsible for payment of such costs.

12.2 CORRECTION OF WORK

12.2.1 BEFORE OR AFTER SUBSTANTIAL COMPLETION

12.2.1.1 The Contractor shall promptly correct Work rejected by the Consultant or failing to conform to the requirements of the Contract Documents, whether discovered before or after Substantial Completion and whether or not fabricated, installed or completed. Costs of correcting such rejected Work, including additional testing and inspections and compensation for the Consultant's services and expenses made necessary thereby, shall be at the Contractor's expense. If prior to Substantial Completion the contractor or any Subcontractors or anyone they are responsible for uses or damages any portion of the Work, they shall return it to “like new” condition without any increase in the Contract Time or Sum.

12.2.2 AFTER SUBSTANTIAL COMPLETION

12.2.2.1 In addition to the Contractor's obligations under Paragraph 3.5, if, within one year after the date of Substantial Completion of the Work or designated portion thereof or after the date for commencement of warranties established under Subparagraph 9.9.1, or by terms of an applicable special warranty required by the Contract Documents, any of the Work is found to be not in accordance with the requirements of the Contract Documents, the Contractor shall correct it promptly (but in no event later than seven days) after receipt of written notice from the Owner to do so unless the Owner has previously given the Contractor a full and final written acceptance of such condition. The Owner shall give such notice promptly after discovery of the condition. During the one-year period for correction of Work, if the Owner fails to notify the Contractor and give the Contractor an opportunity to make the correction, the Owner waives the rights to require correction by the Contractor and to make a claim for breach of warranty. If the Contractor fails to correct nonconforming Work promptly during that period after receipt of notice from the Owner or Consultant, the Owner may correct it in accordance with Paragraph 2.4.

12.2.2.2 The one-year period for correction of Work shall be extended with respect to portions of Work first performed after Substantial Completion by the period of time between Substantial Completion and the actual performance of the Work.

12.2.2.3 The one-year period for correction of Work shall be extended by corrective Work performed by the Contractor pursuant to this Paragraph 12.2.

12.2.3 The Contractor shall remove from the site portions of the Work which are not in accordance with the requirements of the Contract Documents and are neither corrected by the Contractor nor accepted by the Owner.

12.2.4 The Contractor shall bear the sole cost of correcting destroyed or damaged construction, whether completed or partially completed, of the Owner or separate contractors caused by the Contractor's correction or removal of Work which is not in accordance with the requirements of the Contract Documents.

12.2.5 Nothing contained in this Paragraph 12.2 shall be construed to establish a period of limitation with respect to other obligations which the Contractor might have under the Contract Documents. Establishment of the one-year period for correction of Work as described in Subparagraph 12.2.2 relates only to the specific obligation of the Contractor to correct the Work, and has no relationship to the time within which the obligation to comply with the Contract Documents may be sought to be enforced, nor to the time within which proceedings may be commenced to establish the Contractor's liability with respect to the Contractor's obligations other than specifically to correct the Work.

12.3 ACCEPTANCE OF NONCONFORMING WORK

12.3.1 If the Owner prefers to accept Work which is not in accordance with the requirements of the Contract Documents, the Owner may do so instead of requiring its removal and correction, in which case the Contract Sum will be reduced as appropriate and equitable. Such adjustment shall be effected whether or not final payment has been made.

ARTICLE 13 MISCELLANEOUS PROVISIONS

13.1 GOVERNING LAW

13.1.1 The Contract shall be governed by the law of the State of Oregon.

13.2 SUCCESSORS AND ASSIGNS

13.2.1 The Owner and Contractor respectively bind themselves, their partners, successors, assigns and legal representatives to the other party hereto and to partners, successors, assigns and legal representatives of such other party in respect to covenants, agreements and obligations contained in the Contract Documents.

13.2.2 The Owner may, without consent of the Contractor, assign the Contract to any person or entity. In such event, they shall assume the Owner's rights and obligations under the Contract Documents. The Contractor shall execute all consents reasonably required to facilitate such assignment.

13.3 WRITTEN NOTICE

13.3.1 Written notice shall be deemed to have been duly served if delivered in person to the individual or a member of the firm or entity or to an officer of the corporation for which it was intended, or if delivered at or sent by registered or certified mail to the last business address known to the party giving notice. Notice by e-mail or facsimile shall not constitute written notice unless the Owner shall otherwise agree.

13.4 RIGHTS AND REMEDIES

13.4.1 Duties and obligations imposed by the Contract Documents and rights and remedies available thereunder shall be in addition to and not a limitation of duties, obligations, rights and remedies otherwise imposed or available by law.

13.4.2 No action or failure to act by the Owner, Consultant or Contractor shall constitute a waiver of a right or duty afforded them under the Contract, nor shall such action or failure to act constitute approval of or acquiescence in a breach thereunder, except as may be specifically agreed in writing.

13.5 TESTS AND INSPECTIONS

13.5.1 Tests, inspections and approvals of portions of the Work required by the Contract Documents or by laws, ordinances, rules, regulations or orders of public authorities having jurisdiction shall be made at an appropriate time. Unless otherwise provided, the Contractor shall timely make all arrangements for such tests, inspections and approvals with an independent testing laboratory or entity acceptable to the Owner, or with the appropriate public authority, and shall bear all related costs of tests, inspections and approvals. Except as otherwise provided herein, the cost of private-independent tests by third-parties to this Agreement shall be at Owner's expense. The Contractor shall give the Consultant and Owner timely notice

of when and where tests and inspections are to be made so that the Consultant and Owner may be present for such procedures. The Owner shall bear costs of tests, inspections or approvals which do not become requirements until after bids are received or negotiations concluded.

13.5.2 If the Consultant, Owner or public authorities having jurisdiction determine that portions of the Work require additional testing, inspection or approval not included under Subparagraph 13.5.1, the Consultant may, upon written authorization from the Owner, instruct the Contractor to make arrangements for such additional testing, inspection or approval by an entity acceptable to the Owner, and the Contractor shall give timely notice to the Consultant and Owner of when and where tests and inspections are to be made so that the Consultant and Owner may be present for such procedures. Such costs, except as provided in Subparagraph 13.5.3, or otherwise in the Contract Documents shall be at the Owner's expense.

13.5.3 If such procedures for testing, inspection or approval under Subparagraphs 13.5.1 and 13.5.2 reveal failure of the portions of the Work to comply with requirements established by the Contract Documents, all costs made necessary by such failure including those of repeated procedures and compensation for the Consultant's and Owner's services and expenses shall be at the Contractor's sole cost and expense.

13.5.4 Required certificates of testing, inspection or approval shall, unless otherwise required by the Contract Documents, be secured by the Contractor and promptly delivered to the Consultant.

13.5.5 If the Consultant is to observe tests, inspections or approvals required by the Contract Documents, the Consultant will do so reasonably and, where practicable, at the normal place of testing.

13.5.6 Tests or inspections conducted pursuant to the Contract Documents shall be made promptly to avoid unreasonable delay in the Work.

13.6 INTEREST

13.6.1 Payments due and unpaid under the Contract Documents shall bear interest from the date payment is due at such rate as the parties may agree upon in writing or, in the absence thereof, at the legal rate prevailing from time to time at the place where the Project is located.

13.7 COMMENCEMENT OF STATUTORY LIMITATION PERIOD

13.7.1 As between the Owner and Contractor any applicable statute of limitations shall accrue as provided by law in all events before substantial completion, between substantial completion and final certificate for payment, after final certificate for payment and otherwise.

ARTICLE 14 TERMINATION OR SUSPENSION OF THE CONTRACT

14.1 TERMINATION BY THE CONTRACTOR

14.1.1 The Contractor may terminate the Contract if the Work is stopped for a period of 30 consecutive days through no act or fault of the Contractor or any Subcontractors, Sub-subcontractor or their agents or employees or any other persons or entities performing portions of the Work under direct or indirect contract with the Contractor, for any of the following reasons:

.1 issuance of an order of a court or other public authority having jurisdiction which requires all Work to be stopped:

.2 an act of government, such as a declaration of national emergency which requires all Work to be stopped; or

.3 because the Consultant has not issued a Certificate for Payment and has not notified the Contractor of the reason for withholding certification as provided in Subparagraph 9.4.1, or because the Owner has not made payment on a Certificate for Payment within the time stated in the Contract Documents following 30 prior written notice to the Owner.

14.1.2 If one of the reasons described in Subparagraph 14.1.1 exists, the Contractor may, upon seven days' written notice to the Owner and Consultant, terminate the Contract and recover from the Owner payment for Work executed and for proven loss with respect to materials, equipment, tools, and construction equipment and machinery, including agreed reasonable overhead and profit.

14.2 TERMINATION BY THE OWNER FOR CAUSE

14.2.1 The Owner may terminate the Contract if the Contractor:

.1 persistently or repeatedly refuses or fails to supply enough properly skilled workers or proper materials;

.2 fails to make payment to Subcontractors for materials or labor in accordance with the respective agreements between the Contractor and the Subcontractors;

.3 persistently disregards laws, ordinances, or rules, regulations or orders of a public authority having jurisdiction; or

.4 otherwise is guilty of substantial breach of a provision of the Contract Documents.

14.2.2 When any of the above reasons exist, the Owner, upon certification by the Consultant that sufficient cause exists to justify such action, may without prejudice to any other rights or remedies of the Owner and after giving the Contractor and the Contractor's surety, if any, seven days' written notice, terminate employment of the Contractor and may, subject to any prior rights of the surety:

.1 take possession of the site and of all materials, equipment, tools, and construction equipment and machinery thereon owned by the Contractor (but not the construction equipment owned, operated and used by Subcontractors in the performance of their Work);

.2 accept assignment of subcontracts pursuant to Paragraph 5.4; and

.3 finish the Work by whatever reasonable method the Owner may deem expedient. Upon request of the Contractor, the Owner shall furnish to the Contractor a detailed accounting of the costs incurred by the Owner in finishing the Work.

14.2.3 When the Owner terminates the Contract for one of the reasons stated in Subparagraph 14.2.1, the Contractor shall not be entitled to receive further payment until the Work is finished.

14.2.4 If the unpaid balance of the Contract Sum exceeds costs of finishing the Work, including compensation for the Consultant's services and expenses made necessary thereby, and other damages incurred by the Owner and not expressly waived, such excess shall be paid to the Contractor. If such costs and damages exceed the unpaid balance, the Contractor shall pay the difference to the Owner. The amount

to be paid to the Contractor or Owner, as the case may be, shall be certified by the Consultant, upon application, and this obligation for payment shall survive termination of the Contract. Contractor hereby fully, finally and unconditionally waives any and all other claims, including but not limited to those for lost or anticipated profits or overhead.

14.3 SUSPENSION BY THE OWNER FOR CONVENIENCE

14.3.1 The Owner may, without cause, order the Contractor in writing to suspend, delay or interrupt the Work in whole or in part for such period of time as the Owner may determine.

14.3.2 The Contract Sum and Contract Time shall be adjusted for increases in the cost and time caused by suspension, delay or interruption as described in Subparagraph 14.3.1. Adjustment of the Contract Sum shall include profit. No adjustment shall be made to the extent:

.1 that performance is, was or would have been so suspended, delayed or interrupted by another cause for which the Contractor is responsible; or

.2 that an equitable adjustment is made or denied under another provision of the Contract.

14.4 TERMINATION BY THE OWNER FOR CONVENIENCE

14.4.1 The Owner may, at any time, terminate the Contract for the Owner's convenience and without cause.

14.4.2 Upon receipt of written notice from the Owner of such termination for the Owner's convenience, the Contractor shall:

.1 cease operations as directed by the Owner in the notice;

.2 take actions necessary, or that the Owner may direct, for the protection and preservation of the Work; and

.3 except for Work directed to be performed prior to the effective date of termination stated in the notice, terminate all existing subcontracts and purchase orders and enter into no further subcontracts and purchase orders.

14.4.3 In case of such termination for the Owner's convenience, the Contractor shall be entitled to receive payment for Work executed, and costs incurred by reason of such termination as provided in 14.4.4,

14.4.4. Upon on such termination Contractor shall recover as its sole remedy payment for Work properly and timely performed and installed prior to the effective date of the termination and for items properly and timely fabricated off the site and delivered and stored in accordance with the Owner’s instructions prior to the effective date of termination. Contractor hereby fully, finally and unconditionally waives any and all other claims, including but not limited to those for lost or anticipated profits, or overhead. Owner shall be credited for payments previously made and claims the Owner has.

END SECTION

PAYMENT BOND

Bond No. _____

Project Name: Sunrise 2021 Mechanical Upgrade Project

_____(Surety #1)

Bond Amount No. 1: $ _____

_____(Surety #2)*

Bond Amount No. 2*: $ _____
* *If using multiple sureties*

Total Penal Sum of Bond: $ _____

We, _____, as Principal, and the above identified Surety(ies), authorized to transact surety business in Oregon, as Surety, hereby jointly and severally bind ourselves, our respective heirs, executors, administrators, successors and assigns firmly by these presents to pay unto Greater Albany Public School District the sum of (Total Penal Sum of Bond) _____
(Provided, that we the Sureties bind ourselves in such sum "jointly and severally" as well as "severally" only for the purpose of allowing a joint action or actions against any or all of us, and for all other purposes each Surety binds itself, jointly and severally with the Principal, for the payment of such sum only as is set forth opposite the name of such Surety), and

WHEREAS, the Principal has entered into a contract with the District, the plans, specifications, terms and conditions of which are contained in above-referenced Solicitation.

WHEREAS, the terms and conditions of the contract, together with applicable plans, standard specifications, special provisions, schedule of performance, and schedule of contract prices, are made a part of this Payment Bond by reference, whether or not attached to the contract (all hereafter called "Contract"); and

WHEREAS, the Principal has agreed to perform the Contract in accordance with the terms, conditions, requirements, plans and specifications, and schedule of contract prices which are set forth in the Contract and any attachments, and all authorized modifications of the Contract which increase the amount of the work, or the cost of the Contract, or constitute authorized extensions of time for performance of the Contract, notice of any such modifications hereby being waived by the Surety:

NOW, THEREFORE, THE CONDITION OF THIS BOND IS SUCH that if the Principal shall faithfully and truly observe and comply with the terms, conditions and provisions of the Contract, in all respects, and shall well and truly and fully do and perform all matters and things by it undertaken to be performed under said Contract and any duly authorized modifications that are made, upon the terms set forth therein, and within the time prescribed therein, or as extended therein as provided in the Contract, with or without notice to the Sureties, and shall indemnify and save harmless the District, and members thereof, its officers, employees and agents, against any claim for direct or indirect damages of every kind and description that shall be suffered or claimed to be suffered in connection with or arising out of the performance of the Contract by the Contractor or

its subcontractors, and shall promptly pay all persons supplying labor, materials or both to the Principal or its subcontractors for prosecution of the work provided in the Contract; and shall promptly pay all contributions due the State Industrial Accident Fund and the State Unemployment Compensation Fund from the Principal or its subcontractors in connection with the performance of the Contract; and shall pay over to the Oregon Department of Revenue all sums required to be deducted and retained from the wages of employees of the Principal and its subcontractors pursuant to ORS 279C.600, and shall permit no lien nor claim to be filed or prosecuted against the District on account of any labor or materials furnished; and shall do all things required of the Principal by the laws of this State, then this obligation shall be void; otherwise, it shall remain in full force and effect.

Nonpayment of the bond premium will not invalidate this bond nor shall the District, or the above-referenced, be obligated for the payment of any premiums.

This bond is given and received under authority of ORS Chapter 279C, the provisions of which hereby are incorporated into this bond and made a part hereof.

IN WITNESS WHEREOF, WE HAVE CAUSED THIS INSTRUMENT TO BE EXECUTED AND SEALED BY OUR DULY AUTHORIZED LEGAL REPRESENTATIVES:

Dated this _____day of _____, 2020.

PRINCIPAL: _____

By _____
Signature

_____
Official Capacity

Attest: _____
Corporation Secretary

SURETY: _____
[Add signatures for each if using multiple bonds]

BY ATTORNEY-IN-FACT:
[Power-of-Attorney must accompany each bond]

_____
Name

_____
Signature

_____
Address

_____
City State Zip

_____
Phone Fax

PERFORMANCE BOND

Bond No. _____

Project Name: Sunrise 2021 Mechanical Upgrade Project

_____(Surety #1)

Bond Amount No. 1: $ _____

_____(Surety #2)*

Bond Amount No. 2*: $ _____
* *If using multiple sureties*

Total Penal Sum of Bond: $ _____

We, _____, as Principal, and the above identified Surety(ies), authorized to transact surety business in Oregon, as Surety, hereby jointly and severally bind ourselves, our respective heirs, executors, administrators, successors and assigns firmly by these presents to pay unto Greater Albany Public School District the sum of (Total Penal Sum of Bond) _____
(Provided, that we the Sureties bind ourselves in such sum "jointly and severally" as well as "severally" only for the purpose of allowing a joint action or actions against any or all of us, and for all other purposes each Surety binds itself, jointly and severally with the Principal, for the payment of such sum only as is set forth opposite the name of such Surety), and

WHEREAS, the Principal has entered into a contract with the District, the plans, specifications, terms and conditions of which are contained in above-referenced Solicitation.

WHEREAS, the terms and conditions of the contract, together with applicable plans, standard specifications, special provisions, schedule of performance, and schedule of contract prices, are made a part of this Payment Bond by reference, whether or not attached to the contract (all hereafter called "Contract"); and

WHEREAS, the Principal has agreed to perform the Contract in accordance with the terms, conditions, requirements, plans and specifications, and schedule of contract prices which are set forth in the Contract and any attachments, and all authorized modifications of the Contract which increase the amount of the work, or the cost of the Contract, or constitute authorized extensions of time for performance of the Contract, notice of any such modifications hereby being waived by the Surety:

NOW, THEREFORE, THE CONDITION OF THIS BOND IS SUCH that if the Principal shall faithfully and truly observe and comply with the terms, conditions and provisions of the Contract, in all respects, and shall well and truly and fully do and perform all matters and things by it undertaken to be performed under said Contract and any duly authorized modifications that are made, upon the terms set forth therein, and within the time prescribed therein, or as extended therein as provided in the Contract, with or without notice to the Sureties, and shall indemnify and save harmless the District, and members thereof, its officers, employees and agents, against any claim for direct or indirect damages of every kind and description that shall be suffered or claimed to be suffered in connection with or arising out of the performance of the Contract by the Contractor or

its subcontractors, and shall promptly pay all persons supplying labor, materials or both to the Principal or its subcontractors for prosecution of the work provided in the Contract; and shall promptly pay all contributions due the State Industrial Accident Fund and the State Unemployment Compensation Fund from the Principal or its subcontractors in connection with the performance of the Contract; and shall pay over to the Oregon Department of Revenue all sums required to be deducted and retained from the wages of employees of the Principal and its subcontractors pursuant to ORS 279C.600, and shall permit no lien nor claim to be filed or prosecuted against the District on account of any labor or materials furnished; and shall do all things required of the Principal by the laws of this State, then this obligation shall be void; otherwise, it shall remain in full force and effect.

Nonpayment of the bond premium will not invalidate this bond nor shall the District, or the above-referenced, be obligated for the payment of any premiums.

This bond is given and received under authority of ORS Chapter 279C, the provisions of which hereby are incorporated into this bond and made a part hereof.

IN WITNESS WHEREOF, WE HAVE CAUSED THIS INSTRUMENT TO BE EXECUTED AND SEALED BY OUR DULY AUTHORIZED LEGAL REPRESENTATIVES:

Dated this _____day of _____, 2020.

PRINCIPAL: _____

By _____
Signature

_____
Official Capacity

Attest: _____
Corporation Secretary

SURETY: _____
[Add signatures for each if using multiple bonds]

BY ATTORNEY-IN-FACT:
[Power-of-Attorney must accompany each bond]

_____
Name

_____
Signature

_____
Address

_____
City State Zip

_____
Phone Fax

PART 1 GENERAL

1.01 MINIMUM WAGE RATES

A. The minimum wage rates to be paid all crafts and labor on this contract shall be the prevailing wage for the individual crafts involved in the Linn County area during the life of the contract and as determined by the Commissioner of the Oregon Bureau of Labor and Industries, or in the case of a Federal-Aid project, the wage determination decision of the Federal Secretary of Labor, along with conformance to ORS 279C, as may be applicable to the supplying of the services and/or materials called for in the bid.

B. Every contractor and subcontractor shall pay workers not less than the specified minimum hourly rate of wage for each trade or occupation in each locality. When a public works project is subject to Davis-Bacon Act (40 U.S.C. 3141 et seq) that would otherwise be subject to state prevailing wages, if the state prevailing rate of wage is higher than the federal prevailing rate of wage, the contractor and every subcontractor on the project shall pay at least the state prevailing rate of wage.

C. Each worker in each trade or occupation employed in the performance of the contract either by the contractor, subcontractor or other person doing or contracting to do or contracting for the whole or any part of the work on the contract, must be paid not less than the applicable state prevailing rate of wage in accordance with ORS 279C.383 and 279C.840, or the applicable federal prevailing rate of wage, whichever is higher.

1.02 GENERAL REQUIREMENTS

A. If a dispute arises as to what the prevailing wage rate for any class of worker is, and if the dispute cannot be settled by the parties involved, it may be referred to the Commission of the Bureau of Labor and Industries, State of Oregon, for final determination. The Wage Rates are minimum rates only and the Owner will not consider any claims or additional compensation because of payment made by Contractor or a Sub-Contractor of any wage rate in excess of the prevailing rate.

B. Prevailing Wage Rates:

1. Pursuant to ORS Ch. 279C.800 - 279C.870, "Prevailing Wage Rates for Public Works Contracts in Oregon" effective July 1, 2020, and amendments, if any, are bound hereinafter and are included as a part of this Specification.

C. Other requirements related to Prevailing Wage are listed in Section 00 5000 – Agreement for Stipulated Sum.

PART 2 PRODUCTS - NOT USED

PART 3 EXECUTION - NOT USED

END OF SECTION

ARTICLE 11 - INSURANCE AND BONDS

Revise 11.1.2: Add the following:

The insurance required by 11.1.1 shall be written for not less than the following limits, or greater if required by law and underwritten by an insurance company rated A or A+ by A.M. Best & Co.

1. **Workers' Compensation:** Statutory
2. **Comprehensive General Liability** (**including Premises-Operations:** Independent Contractor's Protective; Products and Completed Operations; Explosion, Underground & Collapse; Broad-Form Property Damage, Blanket Contractual Liability, Personal Injury with Employment Exclusion Deleted):

   (a) Bodily Injury
   $2,000,000 Each Occurrence
   $4,000,000 Annual Aggregate

   (b) Property Damage
   $2,000,000 Each Occurrence
   $4,000,000 Annual Aggregate

   (c) Products and Completed Operations to be maintained for two (2) years after final payment.

   (d) Property Damage Liability Insurance shall provide X, C and U coverages.
3. **Comprehensive Automobile Liability:**

   (a) Bodily Injury
   $1,000,000 Each Person
   $1,000,000 Each Occurrence

   (b) Property Damage
   $1,000,000 Each Occurrence
4. The Owner shall be named as the Certificate Holder.
5. In addition, furnish true umbrella coverage, which provides excess limits over the primary layer and broader scope, in an amount not less than $2,000,000.
6. Insurance shall be written by a firm licensed to do business in the State of Oregon and as approved by the Owner. The Owner's specification or approval of this insurance or of its amount shall not relieve or decrease the liability of the Contractor under the Contract Documents or otherwise.

11.1.3: Add the following:

The Contractor shall furnish one copy of the General Liability and Automobile Liability policy. The policies shall name the Greater Albany Public School District and its members, partners, officers, directors, agents, and employees, and the successors in interest of the foregoing, as Certificate Holder, using ISO additional insureds endorsement CG 20 10 11 85 or a substitute providing equivalent coverages within ten (10) days after the Owner issues a "Notice of Intent to Award Contract". The Contractor shall furnish to the Owner copies of any subsequently issued endorsements amending, modifying, altering or restricting coverage or limits.

END OF SECTION

PART 1 GENERAL

1.01 PROJECT

A. Project Name: Sunrise 2021 Mechanical Upgrade Project

B. Owner's Name: Greater Albany Public School District 8J

C. Consultant's Name: MFIA, Inc.

D. The Project consists of schoolwide mechanical upgrades of heating and ventilation equipment, boilers, exhaust fans, pumps and hydronic piping.

1.02 CONTRACT DESCRIPTION

1.03 WORK BY OWNER

A. Items noted OFOI (Owner-Furnished, Owner-Installed) will be supplied and installed by Owner before Substantial Completion. Some items include:

B. Items noted OFCI (Owner-Furnished, Contractor-Installed) will be supplied by the Owner for installation by Contractor before Substantial Completion. Some items include:

C. Items noted OFOICC (Owner Furnished, Owner Install, Contractor Coordinated) will be supplied by the Owner, installed by the Owner’s contractor, but the responsibility of the Contractor to coordinate installation before Substantial Completion.

1.04 OWNER OCCUPANCY

A. Owner intends to occupy the Project upon Substantial Completion

B. Cooperate with Owner to minimize conflict and to facilitate Owner's operations.

C. Schedule the Work to accommodate Owner occupancy.

1.05 CONTRACTOR USE OF SITE AND PREMISES

A. Except as otherwise stipulated herein, Contractors will have complete use of the Premises within the boundaries of the project as shown on the Drawings for the execution of the Work.

B. The possession, use, or distribution of illicit drugs and alcohol on the Owner's premises is prohibited. Prescription medications brought to the project site shall be in the original container bearing the name of the drug, the name of the physician and the prescribed dosage.

C. TOBACCO FREE INSTITUTION: All bidders shall comply with OAR 581.021.0110 and ORS 326.051 regarding Tobacco Use on Public Grounds. For the purpose of this document “tobacco” is defined to include any lighted or unlighted cigarette, cigar, pipe, clove cigarette, and any other smoking product, spit tobacco, also known as smokeless, dip, chew, snuff, in any form, nicotine or nicotine delivering devices, chemicals or devices that produce the physical effect of nicotine substances or any other tobacco substitute (e.g., e-cigarettes). This does not include FDA approved nicotine replacement therapy

products used for the purpose of cessation. No employee, sub-contractor, material supplier, or project visitor is permitted to smoke, inhale, dip, or chew or sell tobacco at any time, including non-education hours.

1. In any building, facility; or
2. On education facility grounds, athletic grounds, or parking lots.

D. Tools and building materials shall never be left out when an unsecured work area is vacated.

E. Ladders and scaffolding will be taken down when an unsecured work area is vacated.

F. Open holes and other tripping hazards shall be fenced or barricaded when an unsecured work area is vacated.

G. "Secured Work Area" is defined as an area having a perimeter cyclone fence at least 6 feet in height, with gates which close and lock so that no casual entrance is possible by unauthorized personnel.

H. Operations resulting in vapors, emissions or flying objects shall be conducted in such a way as to prevent exposure to any unprotected parties or property.

1.06 WORK SEQUENCE

1.07 DUST PROTECTION AND SAFETY BARRIERS

A. The Contractor shall erect temporary Dust and Safety Barriers around all of the Construction Operations to keep dust and debris within the localized work area, and to protect the owner, staff, and the public from construction activities. Additional requirements may be required if airborne dust is judged by the Owner to be a problem.

B. The Contractor shall take precautions to protect existing smoke detectors from damage or deterioration from dust caused by work of this contract.

1.08 OVERTIME WORK

A. The Contractor shall notify the Owner in writing, at least 48 hours in advance of any overtime work, including nights, weekends, and holidays. Do no overtime work without Owner's prior approval.

B. The Contractor shall reimburse the Architect and Owner for any expenses incurred by them because of Contractor's overtime work.

1.09 WORK IN PUBLIC RIGHT-OF-WAY

A. The Contractor shall obtain any required Permits, pay Permit Fees, arrange for inspections by Regulatory Agencies, and comply with governing Regulatory Agency requirements.

1.10 PROTECTING EXISTING UTILITIES

A. Original Building Drawings and Site Survey Drawings indicate approximate location of any known, concealed Utility Lines. Before starting work, Contractor shall determine exact location of any of these Lines that could be damaged by Contract Work.

B. Contractor shall assume that other unknown Utility Lines do exist, and Contractor shall proceed with caution when working in areas that could conceal unknown Utilities.

C. If such Utility Lines are encountered, immediately request disposition instructions from Architect.

D. If Utility Lines are damaged; remove, repair, or replace Lines as directed. Additional compensation and/or extension of time, if any, caused by removing, repairing, or replacing Lines will be determined in accordance with General Conditions.

1.11 PROTECTING EXISTING LANDSCAPING & TREES

A. Protect existing Trees, not designated for removal, against damage caused by work of this contract.

B. Provide necessary Fencing and Barricades. Erect prior to Work, and unless otherwise instructed, remove after Work completion.

C. Prohibit Earth stockpiling, Material storage, and Vehicle Parking and Traffic within Drip-line of Trees.

D. Prohibit dumping of Refuse, Chemicals, and other Materials and puddling or running Water which may injure Plant growth including Root systems.

E. Prohibit Foot and Vehicle Traffic which may compact Soil over Root Systems.

F. Prohibit any unnecessary cutting, breaking and skinning of Branches and Roots, and prohibit skinning and bruising of Bark. All tree pruning activities shall be conducted by a certified arborist.

G. Prohibit all cutting, breaking, and skinning of branches and roots, and skinning or bruising of bark of any trees within the street Right of Way. Consult with a certified arborist and the Authority havign jurisdiction prior to starting and construction activities that may threaten to damage street trees.

H. Prohibit Fires, High-heat and Smoke adjacent to Trees.

I. Repair or replace with plants of equal size, any material damaged by Construction Operations.

J. Where damaged Trees cannot realistically be repaired or replaced, pay Owner, as Liquidated Damage, value of Trees as determined by Council of Tree & Landscape Appraisers and as distributed by International Society of Arborculture. Copies can be obtained from Society at Box 71, Urbana, IL 61801.

1.12 PROTECTING EXISTING SUBGRADE

A. Contractor shall protect against damage, existing Subgrade and Earthwork provided under this Contract.

B. Where necessary to accomplish required protection, provide additional Temporary Fill or other approved Cover over Work to be protected.

1.13 PROTECT EXISTING STRUCTURES

A. Contractor shall protect against damage, existing building parts not scheduled for repair or remodel under this contract.

B. Where necessary to accomplish required protection, provide additional Temporary barricades, cushioning, or other approved Cover over material to be protected.

1.14 HAZARDOUS MATERIALS

A. Building Materials Containing Asbestos and Lead have been found in this building in the past. The Owner has previously removed or encapsulated most of the asbestos. By this notice, the Contractor and the Sub-contractors, and their workers, are asked to be aware of the possible presence of Asbestos Bearing Materials, lead and other hazardous materials and if found, or even suspected, to immediately stop work in the area, and notify the Architect and the Owners Project Manager of the location and condition. A separate independent contract will be issued by the Owner to have the suspected material tested and if needed removed or encapsulated.

B. The Contractor and Sub-contractors, and their workers shall be extremely careful when working around any asbestos or encapsulated asbestos materials, and take any necessary precautions to avoid disturbing the asbestos or the encapsulation materials. If the asbestos or the encapsulation is disturbed, immediately stop work in the area, and notify the Engineer and the Owners Facility Manager of the location and condition.

1.15 CRIMINAL HISTORY CHECK / PHOTO ID

A. The names of all Contractor and all Subcontractor employees who will be on the job site for more than one day must be submitted to the District. These employees shall fill out a criminal history form provided by the District. Criminal history checks will be run through the Oregon State Police as provided for in ORS 326.603. The District shall bear the cost of processing such Criminal history checks.

1. Through the signature on the criminal history form, authorization is also given to HMKCO and its representative to investigate this information. Further, with this signature, consent is given to all governmental agencies, public or private companies and individuals to release information regarding the individual to the HMKCO and to their representative. The District shall bear the cost of processing such Criminal history checks.

B. In accordance with ORS 326.603(8) the District is required to terminate the employment or contract status of any individual who refuses to consent to a criminal history check of to be fingerprinted or falsely swears to the non-conviction of any crime.

C. In accordance with ORS 326.603(7)(a) no individual found to have been convicted of any crime listed in ORS 342.143 or of an attempt to commit one of the listed crimes shall be allowed to work on any District site.

1. It is vital that employees are instructed to accurately complete criminal history forms. Crimes listed in ORS 342.143 which automatically bar an individual from employment with or contracting with the District are primarily crimes of violence, crimes against children, and sex related crimes. However, falsely swearing that

you have not been convicted of a crime obligates the District to terminate employment or contract status even if the crime is not listed in ORS 342.143.

D. All employees working on site shall wear a Name and Photo Identification Badge. The Contractor shall provide all Photo ID badge. Badge shall state GAPS, Sunrise 2021 Mechanical Upgrade Project, employee name, and company they represent.

PART 2 PRODUCTS - NOT USED

PART 3 EXECUTION - NOT USED

END OF SECTION

PART 1 GENERAL

1.01 SECTION INCLUDES

A. Procedures for preparation and submittal of applications for progress payments.

B. Documentation of changes in Contract Sum and Contract Time.

C. Change procedures.

D. Correlation of Contractor submittals based on changes.

E. Procedures for preparation and submittal of application for final payment.

F. Schedule of Values.

G. Payments for products stored off site.

1.02 RELATED REQUIREMENTS

A. Section 00 5000 - Agreement Form: Contract Sum, retainages, payment period, monetary values of unit prices.

B. Section 00 6000 - General Conditions and Document 00 8000 - Supplementary Conditions: Additional requirements for progress payments, final payment, changes in the Work.

C. Section 00 7343 - Prevailing Wage Rates.

1.03 SUBMITTALS

A. Submit a preliminary draft to the Consultant 3 weeks prior to the submittal for the first Application. The purpose preliminary draft is to confirm the level of detail required by the Design Team. The Contractor is to make adjusted requested by the Consultant. The level of detail may include values as separate lines (entities) for each Specification Section. The Consultant will not review any Application submitted until changes requested by the Consultant to the preliminary draft have been incorporated.

1.04 SCHEDULE OF VALUES

A. Form to be used: AIA G703 or equivalent.

B. Electronic media printout including equivalent information will be considered in lieu of standard form specified; submit draft to Consultant for approval.

C. Forms filled out by hand will not be accepted.

D. Submit Schedule of Values in duplicate within 15 days after date of Owner-Contractor Agreement.

1. The purpose of the preliminary draft is to confirm the level of detail required by the Design Team, and the Contractor is to make adjustments as requested. The Consultant will not review any Application submitted until changes requested by the Consultant to the preliminary draft have been incorporated.

E. Format: Utilize the Table of Contents of this Project Manual. Identify each line item with number and title of the specification Section. Identify the following.

1. Each major Work Item.

2. Each subcontracted Work Item. For each major Subcontract (i.e. mechanical, electrical and plumbing), list products and operations of that Subcontract as separate line items. List labor and materials seperately for each major subcontractor.

3. Any Products to be stored, for which separate payments will be requested.

F. Include separately from each line item, a direct proportional amount of Contractor's overhead and profit.

G. Revise schedule to list approved Change Orders, with each Application For Payment.

H. Round off values to nearest dollar.

I. Sum of values listed shall equal total Contract Sum.

J. Substantiating Data: When requested by Consultant, submit justifying Substantiating Data and Line Item Amounts in question.

1.05 APPLICATIONS FOR PROGRESS PAYMENTS

A. Payment Period: Monthly.

B. Form to be used: AIA G702 and G703.

C. Electronic media printout including equivalent information will be considered in lieu of standard form specified; submit sample to Consultant for approval.

D. Forms filled out by hand will not be accepted.

E. Execute certification by signature of authorized officer.

F. Use data from approved Schedule of Values. Provide dollar value in each column for each line item for portion of work performed and for stored products.

G. List each authorized Change Order as a separate line item, listing Change Order number and dollar amount as for an original item of Work. Include individual line items for change orders involving multiple items.

H. Submit one digital copy in PDF format of each Application for Payment.

I. Include the following with the application:

1. Construction progress schedule, revised and current as specified in Section 01 3216.

2. Payment for materials and equipment stored off the site shall be conditioned upon compliance by the Contractor with procedures satisfactory to the Owner.

J. When Consultant requires substantiating information, submit data justifying dollar amounts in question. Provide one copy of data with cover letter for each copy of submittal. Show application number and date, and line item by number and description.

K. Submit Applications for Payment to Consultant at times stipulated below.

L. When Consultant finds Application properly completed and correct, Consultant will transmit 3 copies of Certificate for Payment to Owner for approval of payment, with one copy to Contractor, and one retained for files.

1.06 ALTERNATE CONSTRUCTION PAYMENT MANAGEMENT SYSTEMS:

A. Nothing contained herein would prohibit the Contractor from proposing the use of a Construction Payment Management System that substantially complies with the requirements of this section. The contractor shall pay all additional fees associated with the Owner and Consultant's use of this system.

1.07 PAYMENT FOR PRODUCTS STORED OFF THE PROJECT SITE

A. When delay or added cost to Owner can be avoided by storing Products off Site, Owner will make payment to Contractor for said Products provided that

B. Contractor shall:

1. Locate Storage Facilities within 20 miles of the Consultant's Office or the Project Site.

2. Make Storage Facilities available for Consultant's visual inspection.

3. Segregate and label Stored Products for specified Project.

4. Assume all risk for loss.

5. Assume responsibility for exceeding Product "Shelf-Life".

6. Protect Stored Products and provide applicable Insurance against their damage, discoloration, and theft, listing the Owner and any Mortgagee as Additional Named Insured.

7. Submit itemized Inventory and Schedule of Values for Stored Products together with Certificate of Insurance.

8. Submit payment requests to Owner as part of Contractor's regular Progress Payment Request. Payment requests can only be for the actual invoiced amount to the contractor or sub-contractor by their respective material supplier. Provide copies of invoice to justify amount requested.

9. Reimburse Owner for damages sustained if Stored Products are not delivered to Jobsite when needed.

10. Submit to Owner, with copy to Consultant, a written Waiver of Lien insuring Owner against claims for unpaid Storage Costs.

11. Upon receipt of payment from Owner, prepare and issue to Owner, with a copy for Consultant, and any Mortgagee, a Bill of Sale for Stored Products.

1.08 PREVAILING WAGE PAYMENT CERTIFICATION

A. Submit Prevailing Wage Payment Certification Forms as required by Section 00 7343.

1.09 APPLICATION PAYMENT SCHEDULE

A. Within 15 Days, following Owner's approval of payment of in-order Application for Payment, the Owner will:

1. Until Substantial Completion, pay Ninety-Five Percent (95%) as defined in General Conditions during the previous month, as estimated by Consultant.

B. After execution of Certificate of Substantial Completion, and within 15 days, following Owner's approval of payment of the next in-order Application for Payment, the Owner will pay:

1. Balance due under Contract, excluding a Retainage Amount of at least $1,000, or double the estimated value of uncompleted and/or unacceptable portions of Work, whichever is the greater amount.

C. Thirty (30) days after final inspection and acceptance by Owner, and within 15 days following Owner's approval of payment of final in-order Application for Payment, the Owner will pay:

1. Balance due under Contract, provided Work be then fully completed and Contract be then fully performed.

1.10 MODIFICATION PROCEDURES

A. Submit name of the individual authorized to receive change documents and who will be responsible for informing others in Contractor's employ or subcontractors of changes to the Contract Documents.

B. For minor changes not involving an adjustment to the Contract Sum or Contract Time, Consultant will issue instructions directly to Contractor.

C. For other required changes, Consultant will issue a Construction Change Directive document signed by Owner instructing Contractor to proceed with the change, for subsequent inclusion in a Change Order.

1. The document will describe the required changes and will designate method of determining any change in Contract Sum or Contract Time.

2. Promptly execute the change.

D. For changes for which advance pricing is desired, Consultant will issue a Proposal Request document that includes a detailed description of a proposed change with supplementary or revised drawings and specifications, a change in Contract Time for executing the change with a stipulation of any overtime work required and the period of time during which the

requested price will be considered valid. Contractor shall prepare and submit a fixed price quotation within 7 calendar days.

E. Contractor may propose a change by submitting a request for change to Consultant, describing the proposed change and its full effect on the Work, with a statement describing the reason for the change, and the effect on the Contract Sum and Contract Time with full documentation and a statement describing the effect on Work by separate or other contractors. Document any requested substitutions in accordance with Section 01 6000.

F. Computation of Change in Contract Amount: As specified in the Agreement and Conditions of the Contract.

1. For change requested by Consultant for work falling under a fixed price contract, the amount will be based on Contractor's price quotation.

2. For change requested by Contractor, the amount will be based on the Contractor's request for a Change Order as approved by Consultant.

3. For pre-determined unit prices and quantities, the amount will based on the fixed unit prices.

4. For change ordered by Consultant without a quotation from Contractor, the amount will be determined by Consultant based on the Contractor's substantiation of costs as specified for Time and Material work.

G. Substantiation of Costs: Provide full information required for evaluation.

1. On request, provide the following data:

a. Quantities of products, labor, and equipment.

b. Taxes, insurance, and bonds.

c. Overhead and profit.

d. Justification for any change in Contract Time.

e. Credit for deletions from Contract, similarly documented.

2. Support each claim for additional costs with additional information:

a. Origin and date of claim.

b. Dates and times work was performed, and by whom.

c. Time records and wage rates paid.

d. Invoices and receipts for products, equipment, and subcontracts, similarly documented.

3. For Time and Material work, submit itemized account and supporting data after completion of change, within time limits indicated in the Conditions of the Contract.

H. Execution of Change Orders: Consultant will issue Change Orders for signatures of parties as provided in the Conditions of the Contract.

I. After execution of Change Order, promptly revise Schedule of Values and Application for Payment forms to record each authorized Change Order as a separate line item and adjust the Contract Sum.

J. Promptly revise progress schedules to reflect any change in Contract Time, revise sub-schedules to adjust times for other items of work affected by the change, and resubmit.

K. Promptly enter changes in Project Record Documents.

1.11 APPLICATION FOR FINAL PAYMENT

A. Prepare Application for Final Payment as specified for progress payments, identifying total adjusted Contract Sum, previous payments, and sum remaining due.

B. Application for Final Payment will not be considered until the following have been accomplished:

1. All closeout procedures specified in Section 01 7000.

2. Submit final Application for Payment with unconditional lien releases and supporting documentation not previously submitted and accepted in accordance with requirements of General Conditions.

PART 2 PRODUCTS - NOT USED

PART 3 EXECUTION - NOT USED

END OF SECTION

PART 1 GENERAL

1.01 SECTION INCLUDES

A. Description of Alternates.

B. Procedures for pricing Alternates.

1.02 RELATED REQUIREMENTS

A. Document 00 2113 - Instructions to Bidders: Instructions for preparation of pricing for Alternates.

B. Document 00 4100 - Bid Form: List of Alternates.

1.03 SUBMISSION REQUIREMENTS

A. Indicate variation of Bid Price for Alternates described below. The Bid Form requests a "difference" in Bid Price by adding to or deducting from the Base Bid Price.

1.04 ACCEPTANCE OF ALTERNATES

A. Alternates quoted on Bid Forms will be reviewed and accepted or rejected at Owner's option. Accepted Alternates will be identified in the Owner-Contractor Agreement.

B. Coordinate related work and modify surrounding work to integrate the Work of each Alternate.

C. Bids will be evaluated on the Base Bid price plus any or all of the Alternates intended to be exercised by the Owner. The order of the Alternates listed here does not represent the order in which any of these Alternates will be exercised.

1.05 PROCEDURES

A. Coordination: Modify or adjust affected adjacent work as necessary to completely integrate work of the alternate into Project.

1. Include as part of each alternate, miscellaneous devices, accessory objects, and similar items incidental to or required for a complete installation whether or not indicated as part of alternate.

1.06 SCHEDULE OF ALTERNATES

A. Alternate No. 1 – Boiler Room Demolition and Renovation

PART 2 PRODUCTS - NOT USED

PART 3 EXECUTION - NOT USED
END OF SECTION

PART 1 GENERAL

1.01 SECTION INCLUDES

A. Preconstruction meeting.

B. Progress meetings.

C. Submittals for review, information, and project closeout.

D. Number of copies of submittals.

E. Submittal procedures.

1.02 RELATED REQUIREMENTS

A. Section 00 6000 - General Conditions.

B. Section 01 3216 - Construction Progress Schedule: Form, content, and administration of schedules.

C. Section 01 7000 - Execution and Closeout Requirements: Additional coordination requirements.

D. Section 01 7800 - Closeout Submittals: Project record documents.

1.03 CONSTRUCTION ORGANIZATION & START-UP

A. Responsible Parties:

1. Immediately following Contract execution, Owner will and Contractor shall identify who, within their respective organizations, will be responsible for Project Coordination.

B. The Contractor shall establish on-site Lines of Authority and Communications including the following:

1. Schedule attendance at Preconstruction Meeting and schedule and conduct Progress Meetings as specified in Section 01 3000.

2. Establish procedures for Intra-project Communications including:

a. Submittals.

b. Reports & Records.

c. Recommendations.

d. Coordination Drawings.

e. Schedules.

f. Resolution of Conflicts.

3. Technical Documents Interpretation:

   a. Consult with Consultant to obtain interpretation.

   b. Assist in resolution of questions or conflicts which may arise.

   c. Transmit written interpretations to Subcontractors and to other concerned parties.

4. Permits & Approvals:

   a. Verify that Subcontractors have obtained required Permits and Inspections for Work and for Temporary Facilities.

5. Control use of Site:

   a. Supervise Field Engineering and Project Layout.

   b. Allocate Field Office Space and Work and Storage Areas for use of each Subcontractor.

1.04 COORDINATING SUBCONTRACTORS' WORK

A. Coordinate the Work of all Subcontractors and make certain that, where the Work of one Trade is dependent upon the Work of another Trade, the Work first installed is properly placed, installed, aligned, and finished as specified or required to properly receive subsequent Materials applied or attached thereto.

B. Direct Subcontractors to correct defects in Substrates they install when Subcontractors of subsequent Materials have a reasonable and justifiable objection to such surfaces.

C. Do not force Subcontractors to apply or install Products to improperly placed or improperly finished Substrates that would result in an unsatisfactory or unacceptable finished Product.

1.05 COORDINATING WORK WITH WORK OF OWNER OR OTHER CONTRACTS

A. Coordinate, and make certain that, where Work of either party is dependent upon the other party, the Work first performed is properly placed, installed, aligned, and finished as required to permit the proper installation of the Work following.

B. If the Owner's Work in any way interferes with the Contractor's Work, so notify the Owner sufficiently in advance so that the Owner has reasonable time to make necessary adjustments.

C. If the Contractor's Work in any way interferes with Owner's Work, so notify the Owner as soon as possible. If the Contractor's Work must be modified to accommodate the Owner's Work, except as described elsewhere in this Specification, the Contract Sum and/or the Contract Time will, when necessary be adjusted by a Change Order.

D. Mechanical & Electrical Equipment start-up:

   1. Coordinate check-out of Utilities, Operational Systems, and Equipment.

2. Assist in initial start-up and testing.

3. Record starting dates of Systems and Equipment operation.

E. At completion of Work of each Subcontract, conduct inspection to assure that:

1. Work is acceptable.

2. Specified cleaning has been accomplished, and Temporary Facilities and Debris has been removed from Site.

F. Substantial Completion: See Section 002113 1.13

PART 2 PRODUCTS - NOT USED

PART 3 EXECUTION

3.01 PRECONSTRUCTION MEETING

A. Owner will schedule a meeting after Notice of Award.

B. Attendance Required:

1. Owner.

2. Consultant.

3. Contractor.

4. Contractor's Superintendent.

5. Major Subcontractors.

C. Agenda:

1. Introductions.

2. Execution of Owner- Contractor Agreement.

3. Submission of executed bonds, insurance certificates and background checks.

4. Description of Project

5. Distribution of Contract Documents.

6. Submission of list of Subcontractors, list of Products, schedule of values, and progress schedule.

7. Designation of personnel representing the parties to Contract, Owner and Consultant.

8. Procedures and processing of field decisions, submittals, substitutions, applications for payments, proposal request, Change Orders, and Contract closeout procedures.

    a. Written Change Order requests required

    b. Supporting back-up will be required for all Change Orders

    c. Describe Contractor's procedure for review and oversight in the preparation of Change Orders

    d. Mark-up limitations on Change Orders (See General Conditions Article 7.1.4)

    e. Processing time required

    f. Applications for Payment

        1) Use AIA documents G702 and G703 latest edition

        2) Provide 4 signed and notarized copies

        3) Wage certifications to be attached

9. Scheduling, start date and date of substantial completion.

10. Building permit status.

11. Prevailing wage requirements.

12. Public Agency submittal of RESPONSIBILITY DETERMINATION FORM to Construction Contractor's Board.

13. Communications.

14. Role of Owner's Project Manager.

15. Employee Security Screening and Identification Badging.

16. Submittals required per Contract Documents.

17. MSDS Information

18. Erosion control procedures

19. Waste management procedures

20. Environmental quality requirements

21. Hazardous materials

22. Construction activities, working hours, use of site and building.

23. Staging and parking areas.

24. Temporary facilities and utilities.

25. Request for information and clarification of design

26. Correction of Defects.

27. Weekly on-site progress meetings.

28. Safety and Emergency Procedures.

29. Verify that Contractor's Mandatory Drug Testing Program is in place.

30. Daily Clean-up

31. Project Closeout, substantial completion, final completion.

32. Record drawings and Operations and Maintenance Manuals

33. Tour of Project by Owner's staff and guests (if applicable)

34. Additional Comments

D. Consultant will record minutes and distribute copies within [five] days after meeting to participants, with digital copies to Owner, participants, and those affected by decisions made.

3.02 PROGRESS MEETINGS

A. Schedule and administer meetings throughout progress of the Work at weekly intervals.

B. Make arrangements for meetings, prepare agenda with copies for participants, preside at meetings.

C. Attendance Required:

1. Contractor.

2. Owner.

3. Consultant.

4. Contractor's Superintendent.

5. Major Subcontractors.

D. Agenda:

1. Review minutes of previous meetings.

2. Review of Work progress.

3. Field observations, problems, and decisions.

4. Identification of problems that impede, or will impede, planned progress.

5. Review of submittals schedule and status of submittals.

6. Review of off-site fabrication and delivery schedules.

7. Maintenance of progress schedule.

8. Corrective measures to regain projected schedules.

9. Planned progress during succeeding work period.

10. Coordination of projected progress.

11. Maintenance of quality and work standards.

12. Effect of proposed changes on progress schedule and coordination.

13. Other business relating to Work.

E. The Owner's Project Manager will record minutes and distribute copies within five days after meeting to participants, with digital copies to Contractor, Owner, participants, and those affected by decisions made.

3.03 PRE-INSTALLATION CONFERENCES

A. When required in individual specification sections, the Contractor shall convene a pre-installation meeting prior to commencing work of that section.

B. Require attendance of parties directly affecting, or affected by, work of the specific section.

C. Notify Consultant minimum four days in advance of meeting date.

D. The Contractor shall be responsible to prepare agenda and preside at meeting:

1. Review conditions of installation, preparation and installation procedures.

2. Review coordination with related work.

E. The Contractor shall be responsible to record minutes and distribute copies within four days after meeting to participants, with copies to Consultant, Owner's Project Manager, participants, and those affected by decisions made.

3.04 CONSTRUCTION PROGRESS SCHEDULE - SEE SECTION 01 3216

3.05 SUBMITTALS FOR REVIEW

A. When the following are specified in individual sections, submit them for review:

1. Product data.

2. Shop drawings.

3. Samples for selection.

4. Samples for verification.

5. Other information required in individual specification sections.

B. Submit to Consultant for review for the limited purpose of checking for conformance with information given and the design concept expressed in the contract documents.

C. Product Data:

1. Clearly mark each copy to identify pertinent Products.

2. Show performance characteristics and capacities.

3. Show dimensions, field dimensions, and required clearances.

4. Show wiring and piping diagrams, and controls.

5. Show standard schematic drawings and diagrams:

a. Modify to delete information not applicable to Work.

b. Supplement standard information to provide information specifically applicable to Work.

c. Assure that any photo copied material is clearly legible or provide all original material.

D. Samples will be reviewed only for aesthetic, color, or finish selection.

E. After review, provide copies and distribute in accordance with SUBMITTAL PROCEDURES article below and for record documents purposes described in Section 01 7800 - Closeout Submittals.

3.06 SUBMITTALS FOR INFORMATION

A. When the following are specified in individual sections, submit them for information:

1. Design data.

2. Certificates.

3. Test reports.

4. Inspection reports.

5. Manufacturer's instructions.

6. Manufacturer's field reports.

7. Other information required in individual specification sections.

8. Other types indicated.

B. Submit for Consultant's knowledge as contract administrator or for Owner. No action will be taken.

3.07 SUBMITTALS FOR PROJECT CLOSEOUT

A. Submit Correction Punch List for Substantial Completion.

B. Submit Final Correction Punch List for Substantial Completion.

C. When the following are specified in individual sections, submit them at project closeout:

1. Project record documents.

2. Operation and maintenance data.

3. Warranties.

4. Bonds.

5. Other information required in individual specification sections.

6. Other types as indicated.

D. Submit for Owner's benefit during and after project completion.

3.08 NUMBER OF COPIES OF SUBMITTALS

A. Electronic Documents: Submit one electronic copy in PDF format; an electronically-marked up file will be returned. Create PDFs at native size and right-side up; illegible files will be rejected.

B. Samples: Submit the number specified in individual specification sections; two of which will be retained by Consultant.

1. After review, produce duplicates.

2. Retained samples will not be returned to Contractor unless specifically so stated.

3. Show full range of color, texture & pattern.

3.09 SUBMITTAL PROCEDURES

A. Shop Drawing Procedures:

1. Prepare accurate, drawn-to-scale, original shop drawing documentation by interpreting the Contract Documents and coordinating related Work.

2. Generic, non-project specific information submitted as shop drawings do not meet the requirements for shop drawings.

B. Transmit each submittal with a copy of approved submittal form.

C. Transmit each submittal with a transmittal form that clearly describes submittal contents and the quantity of items delivered.

D. Sequentially number the transmittal form. Revise submittals with original number and a sequential alphabetic suffix.

E. Identify Project, Contractor, Subcontractor or supplier; pertinent drawing and detail number, and specification section number, as appropriate on each copy.

F. Apply Contractor's stamp, signed or initialed certifying that review, approval, verification of Products required, field dimensions, adjacent construction Work, and coordination of information is in accordance with the requirements of the Work and Contract Documents.

G. Deliver submittals to Consultant at business address.

H. Schedule submittals to expedite the Project, and coordinate submission of related items.

I. For each submittal for review, allow 15 days excluding delivery time to and from the Contractor.

J. Identify variations from Contract Documents and Product or system limitations that may be detrimental to successful performance of the completed Work.

K. Notify Consultant in writing, at submission time, of any deviations in Submittals from Contract Document requirements.

L. Provide space for Contractor and Consultant review stamps.

M. When revised for resubmission, identify all changes made since previous submission.

N. Distribute reviewed submittals as appropriate. Instruct parties to promptly report any inability to comply with requirements.

O. Submittals not requested will not be recognized or processed.

P. Submit Shop Drawings, Product Data, and Samples only for those Items specifically required. The Consultant will not be obligated to review Shop Drawings, Product Data, or Samples other than those required by the Contract Documents.

Q. Perform no Work or Fabrication requiring Submittal until Consultant approves Submittal.

END OF SECTION

PART 1 - GENERAL

1.01 REQUIREMENTS INCLUDED

A. Related Requirements

B. General Requirements

C. Definition of Schedule Documents and Submittal Requirements

D. Contractor's Schedule Management

E. Coordination

F. Schedule Format Requirements

G. Weather Impacts and Delays

H. Schedule Updates and Schedule (Network) Revisions

I. Time Impact Analysis for Changed Conditions

J. Recovery Schedule

K. Timeliness of Schedule Document Submittals

L. Owner Review of Schedule Submittals

1.02 RELATED REQUIREMENTS

A. The General Provisions, and General Requirements of the Specifications apply to the work specified in this Section.

B. Section 00 0120 – Bidder-Designed Items and Deferred Submittals

C. Section 01 6300 – Approval For Substitution and Product Options

1.03 GENERAL REQUIREMENTS

A. The Schedules (and schedule documents) described herein are for the following purposes:

1. To define the Contractor's Baseline Plan (including logic and use of resources) for completing the Work

2. To report progress in completion of the Work

3. To evaluate any changes to the Contractor's Baseline Plan and subsequent updated plans

B. In addition, the schedule documents shall serve as a communication tool between the Owner and the Contractor, and the Contractor and its subcontractors. The Owner

encourages the Contractor to use the Schedule to establish an understanding with all parties of the assumptions regarding the Work, and the various constraints and opportunities that are possible within the plan. As the work progresses, the Contractor and the Owner's Representative will use the Schedule to assess impacts and to formulate the best methods to complete the Work on, or ahead of the contractual completion dates. The schedule documents will also be used by the Contract Administrator to evaluate the Contractor's monthly progress payment requests.

C. The Work shall be scheduled and performed pursuant to the provisions of the Contract including any specific dates for Contract completion milestones, phase completion and the like or requirements included in the General Conditions, the Owner-Contractor Agreement, or elsewhere in the Contract documents. All Contract milestone and completion dates listed in these specifications, or elsewhere in the Contract documents, represent only interface dates or major items of the Work. The Contractor is responsible for completion of all aspects of the Work in accordance with the Contract.

D. At any time throughout the course of the Work, the Owner reserves the right to require additional activities to be added to the Schedule to further define the Contractor's plan and intentions regarding the execution of the Work. In each instance, such activities or changes shall be made by the Contractor at no cost or delay to the Owner. The Owner's Representative suggestions would not waive the contractor's right to establish its means and method or its obligation to execute the project in a timely and efficient manner.

E. Should the Contractor desire or intend to complete the Work, or any portion of the Work, earlier than the specified Contract milestone, phase, or similar dates or the overall Contract completion date, the Owner will not be liable to the Contractor for any costs or other damages should the Contractor be unable to complete the Work before Contractor's earlier milestone or completion dates. The duties and obligations of Owner to the Contractor shall be consistent with and applicable only to the completion of the Work on the specified Contract milestone dates or the Contract completion dates unless the Owner and the Contractor otherwise agree in writing, formalized by a change order. The Contractor may finish early but shall not make any claims for additional time-related costs before the expiration of the specified Contract milestone, phase, or similar dates or the overall Contract completion date.

F. The services provided by the Owner's Representative, the existence of schedules, networks or any other charts or services prepared or performed by the Owner's Representative, shall in no way relieve the Contractor of the responsibility for complying with all of the requirements of the Contract documents, including, but not limited to, the responsibility for completing the Work within the Contract Time and the responsibility of planning, scheduling, and coordinating the Work.

G. It is understood that during the prosecution of certain aspects of the work, i.e., phasing; commissioning; work with possible impacts to facilities and/or tenant operations; or utility shutdowns, a separate detailed scheduled will be required. The Contractor shall prepare these schedules in a timely manner as required for distribution by the Owner's Representative to all affected parties. The Contractor shall provide these schedules at no additional cost.

H. In addition to requirements specified herein, schedules shall include the following activities specific to Owner:

1. Delivery of Operational and Maintenance Training Manuals.

2. Submittal and expected approval of manufacturer's recommended spare parts list.

3. System inspection and punch list preparation.

I. The Contractor, including his Project Manager and Superintendent shall hold an orientation meeting with Owner, wherein the Contractor presents his approach to planning the work, developing the schedules, and meeting the requirements of this Section. This orientation meeting shall be held prior to submittal of the Baseline Schedule. The Contractor shall not delay preparation of the required schedules and schedule documents prior to this meeting; however, the Contractor shall be responsible for any changes or corrections to his scheduling as a result of this meeting.

1.04 DEFINITION OF SCHEDULE DOCUMENTS AND SUBMITTAL REQUIREMENTS

A. The following outlines the schedules and schedule documents required by this section to be submitted by the Contractor. Details on each item (and all items) to be submitted are provided in further paragraphs in this Section and in referenced sections.

1. Preliminary (4-Month) Schedule: This schedule is to detail all Contractor work, including procurement activities, mobilization, submittals, and construction activities for the first four months following the date of Notice to Proceed, and be used while the Contractor is developing his baseline schedule. All critical or completion dates required in the contract shall be incorporated into this schedule. The following submittal requirements apply to the preliminary schedule:

a. The Preliminary Schedule shall be submitted in a format and with content acceptable to the Owner's Representative and shall be submitted to the Contract Administrator no later than 10 calendar days after Notice to Proceed.

b. For purposes of this Preliminary Schedule, the Contractor is to assume that construction activities will occur within 30 calendar days after Notice to Proceed.

c. Allow five (5) working days for initial review and five (5) working days for resubmittal reviews by the Contract Administrator.

2. Baseline Schedule: This is a detailed schedule including a narrative of schedule status developed using the Critical Path Method (CPM). It represents the Contractor's plan for the Work from the date of award of the Contract and will be used to make the first Progress Schedule.

a. Submittal requirements: The Baseline Schedule shall be submitted in Primavera P6 format and with content acceptable to the Owner's Representative. The Contractor shall obtain (1) perpetual license of

Primavera P6 EPPM for use by the District PM and (1) license for use by the contractor during the contract duration.

b. Narrative of Schedule Status: This is a narrative that describes the key aspects of the submitted schedules. The Baseline Schedule narrative shall define the key aspects of the Contractor's plan for the Work that

includes the following key sections. The narratives submitted with the Baseline Schedules are required to be stand-alone documents that do not require Baseline Schedules to be attached in order to be comprehensible:

(1) The layout and logic used in the Schedule

(2) Critical submittals

(3) Long-lead equipment and material procurement.

(4) The critical path

(5) An overall float analysis

(6) Any interface concerns with Owner

(7) Costs to date

c. Activities: The schedule shall be grouped by the following work activities:

(1) Mobilization Activities

(2) Procurement Activities

(3) Manufacturing Activities

(4) Quality Control Activities

(5) Installation Activities

(6) Testing Activities

(7) Commissioning Activities

(8) Demobilization Activities

3. Master Summary Schedule: The cost-loaded Master Summary Schedule shall be developed by the Contractor and submitted to the Contract Administrator with the Baseline Schedule and each monthly Progress Schedule.

a. The Master Summary Schedule shall show the sequence in which Contractor proposes to perform the Work, all completion dates and critical dates indicated in the Contract Documents, and the dates on which Contractor plans to start and finish major portions of the Work. The Contractor shall include enough activities in the Master Summary Schedule, so that all significant portions of the Work, critical interfaces, coordination with Owner and milestone and completion dates are addressed.

b. The Summary Schedule shall be cost-loaded, at a high level, to develop a cash flow curve.

4. Critical Path Schedule: This schedule shall show the critical path derived first from the Baseline Schedule and subsequently from the current Progress Schedule. This is a time-scaled network logic diagram, showing only the current critical path of the Work along with its current progress. In the event of near critical path work (less than 10 days of float), the Owner's Representative may request the near critical paths also be shown. The following submittal requirements apply to the Critical Path Schedule:

   a. Submittal Requirements:

      (1) Submit with Baseline Schedule.

      (2) Update and submit with the Progress Schedule.

      (3) Export Primavera P6 schedule data to the client in live file format for all submissions.

5. Progress Schedule: This is a detailed schedule, developed using the Critical Path Method (CPM), which is derived from the Baseline Schedule. The first Progress Schedule is the initial monthly progress update of the Baseline Schedule. Subsequent Progress Schedules will be submitted on a monthly basis that updates the previously issued Progress Schedule. The Progress Schedule will also be used to compare percent complete requested by the Contractor in the monthly progress payment applications, to analyze delays and impacts in all Time Impact Analyses (TIA), and to determine whether a Recovery Schedule is needed from the Contractor.

   a. Submittal requirements: Progress schedules are due monthly to coincide with the progress payment requests. The updated progress schedule will be targeted against the approved baseline and will include baseline start, finish, float, and original duration.

   b. Narrative of Schedule Status: This is a narrative that describes the key aspects of the submitted schedules. The Progress Schedule narrative shall define the key aspects of the Contractor's plan for the Work that includes the following key sections. The narratives submitted with the Progress Schedules are required to be stand-alone documents that do not require Progress Schedules to be attached in order to be comprehensible:

      (1) Progress in Last Period

      (2) Critical Path Progress and Concerns

      (3) Potential Delays and Time Impact Analyses

      (4) Submittal Status (focus on critical submittals and concerns)

      (5) Equipment and Material Delivery Status

      (6) Quality Control Status

      (7) Manufacturing Status

(8) Costs to Date

6. Weekly Short Interval Schedule: This is a three-week Look-Ahead Schedule for use in the weekly schedule review meetings. The weekly interval schedules shall include the current activities from the Progress Schedule and all other schedule information deemed necessary.

a. Submittal requirements:

(1) Provide the schedule in a format acceptable to the Owner's Representative.

(2) Submitted no later than 24 hours before the weekly schedule review meeting.

(3) Distribute the final weekly interval schedule to all field supervision no later than the next workday following the weekly schedule review meeting.

7. Recovery Schedule: This schedule will be required from the Contractor in the event that certain conditions exist such that critical or milestone dates are in jeopardy of being delayed. Recovery Schedule requirements are defined in later paragraphs of this section.

a. Submittal requirements: Submit five (5) working days after notice from the Contract Administrator that a Recovery Schedule is required.

8. Time Impact Analysis: This schedule analysis shall be part of the back-up data required from the Contractor in the event the Contractor claims that Contract changes delayed or impacted the Work and shall be included in any change proposal claiming increase in time. The Time Impact Analysis requirements are defined in later paragraphs of this section.

a. Submittal requirements: Formal submittal of the Time Impact Analysis shall be within 15 calendar days of occurrence of the delay. Failure to submit within the 15 calendar days waives the Contractor's right to claim additional costs or time as a result of such delay.

9. Schedule of Submittals: Submit per the following table:

Deliverable	Hard Copies	Electronic Copies	Submittal Due	Remarks
Preliminary (Four-Month) Schedule	2 color copies of each sort	1	10 calendar days after the Notice to Proceed	One-time submittal. Submit using same format requirements as the Baseline Schedule
Baseline Schedule	2 color copies of each sort	1	30 calendar days after the Notice to Proceed	Acceptance is prerequisite to issuance of NTP. Critical Path Schedule is integral to Baseline Schedule. **Also, see Note (1).**
Progress Schedule		1	Monthly	Critical Path Schedule is integral to Progress Schedule. **Also, see Note (1).**
Master Summary Schedule		1	With the Baseline Schedule, then Monthly	One-time submittal. Submit with the Baseline Schedule and each Progress Schedule
As-Built Schedule	Include color copy in project O&M	1	Within 30 days of substantial completion	Project schedule shall be considered as-built for work completed and updated with each progress billing. Final document shall be included in O&M
Weekly Look-Ahead Schedule	Sufficient copies for weekly meeting attendees	1	1 Electronic copy 24 hours before weekly schedule review meeting, harmonize with sufficient copies for attendee's color copies presented at OAC Meeting	
Recovery Schedule	2 color copies	1	Within 5 days of notice to submit	
Time Impact Analysis	2 color copies	1	Within 15 days of date of delay claimed	Submit with all changes requesting time extensions

Note (1) Includes Master Summary Schedule, Narrative of Schedule Status, Manpower Loading Curve, and Subcontractor Log.

1.05 CONTRACTOR'S SCHEDULE MANAGEMENT

A. Scheduling Organization: The Contractor shall provide a Contractor's Scheduling Manager (CSM) to the implementation and management of the scheduling requirements of the Contract documents. The CSM (who may be the Contractor's Project Manager, Superintendent, or other qualified staff person) shall be on site at all times during the progress of the work, or as otherwise authorized in writing by the Contract Administrator.

B. Qualifications of Contractor's Scheduling Manager:

1. The CSM shall demonstrate acceptable professional familiarity with P6 software, hardware, and/or other scheduling systems and experience necessary to implement all scheduling requirements of the Contract in a timely and expeditious manner.

2. The Owner's Representative will monitor the performance of the CSM. The CSM's performance will be judged on the timeliness and completeness of Contractor's compliance with the scheduling requirements of the Contract documents. If the CSM fails to perform in accordance with the scheduling requirements of the Contract documents, the CSM shall, at the direction of the Contract Administrator, be replaced at no cost to Owner or delay allowable to the project.

1.06 COORDINATION

A. The Contractor shall coordinate the Work with that of Owner contractors, Owner Operations, and Owner tenants, and shall cooperate fully with the Owner's Representative in maintaining an orderly progress toward completion of the Work as scheduled.

B. A Time Impact Analysis (TIA) shall be required to support any claim by the Contractor for delay caused by failure of Owner-furnished equipment and materials to arrive as scheduled, or failure of other Owner interface work or tenants to meet their schedules. The TIA shall be based on Owner activities having the same level of predecessor and successor logic to display delay impacts as the Contractor's Work.

C. The Contractor shall inform its subcontractors of the delivery status of Owner-furnished equipment and material, and of the progress of other interfacing Owner construction work while the Work is underway.

1.07 SCHEDULE FORMAT REQUIREMENTS

A. Unless otherwise specified, the Baseline and Progress Schedules shall be produced utilizing the Microsoft Windows based Primavera P6 Project Management of the most current version.

B. The Baseline and Progress Schedules shall employ the Critical Path Method (CPM) using retained logic for the planning, scheduling and reporting of the work to be performed under this Contract. The type of schedule shall be Precedence Diagramming Method (PDM).

C. The Baseline and Progress Schedules shall include but not be limited to:

1. All Critical, Milestone, and Completion dates defined in the Contract, as well as Owner-provided equipment delivery dates.

2. Date of Contract Award, Notice To Proceed, Mobilization, Substantial Completion, and Overall Beneficial Occupancy, Completion of each Phase, Pre-final Inspections, Final Inspections, and Final Acceptance.

3. Critical procurement and submittal activities including: shop drawings and sample submittals, Owner review of submittals, re-submittals and Owner review of re-submittals, fabrication and delivery for all key, critical path, near critical path and long-lead equipment and material. Owner reserves the right to require the Contractor to add procurement activities to the schedule for any key or long-lead equipment, materials or submittals it deems necessary to monitor the Contractor's schedule for this work.

4. Quality Control Activities, Testing, Pre-Installation Activities, Commissioning, training and closeout activities.

5. Offsite activities that interface with the Contractor's Work, including work by Owner and Owner contractors, delivery of Owner-furnished materials, utilities, agencies, critical Owner operations, Owner tenants, and other similar activities.

D. Activity Descriptions and Setup

1. The description of work by activity and activity coding shall contain the specific type of work to be done and the physical area of the work to which the activity pertains.

2. Activity boundaries shall be easily measurable, and descriptions shall be clear and concise. Activity descriptions should not be prefaced with "Begin" or "Complete." The beginning and end of each activity shall be readily verifiable, and physical progress shall be quantifiable.

3. In general, each critical path and key activity shall be associated with a single performing organization (subcontractor). For other activities, where there is similar type work in an area, organizations (subcontractors) may be grouped for a single activity. Where deemed necessary to define critical, key or unusual work, Owner reserves the right to require additional activities be added to the Contractor's schedule to provide that an activity be associated with each organization (subcontractor). The organization related to the activity shall be identified in a background sort code, such that reports sorted by organization can be made using the scheduling software. Construction Specifications Institute (CSI) codes relating to the division of the work shall be assigned to activities in the same manner described above for organizations. CSI codes are also to be assigned to background sort codes that allow reports by CSI code to be made using the scheduling software.

4. Activity durations over fifteen (15) working days shall be kept to a minimum and shall be used only for non-construction activities, such as shop drawing and sample submittals, fabrication and delivery of materials and equipment, concrete curing, and General Conditions activities. Exceptions to this shall be accepted in writing by the Contract Administrator. The duration of activities shall be in workdays.

5. Activity costs shall be limited to a maximum of Two-Hundred-Fifty-Thousand Dollars ($250,000), excluding major equipment and materials. Exceptions to this shall be accepted in writing by the Contract Administrator.

6. For critical path and near critical path activities, Contractor shall use Finish-to-Start relationships to the extent possible. Contractor shall use more activities if necessary, to use Finish-to-Start relationships in preference to use of Start-to-Start relationships. The Owner reserves the right to require the addition of activities to further define critical path and near critical path work in the Schedule.

7. Activities that constitute the controlling operations or critical path will be identified by use of color (red). The critical path is defined as activities with total float less than one day. Near critical is defined as total float in the range of one to ten days. The critical path and near critical activities shall be less than 25 percent of the total activities in the Baseline Schedule.

8. Imposed completion dates for events other than the Milestone Dates or Completion Dates are generally not permitted. Artificial constraints (imposed start dates) are generally not permitted, except possibly for use in Owner- furnished materials, Owner interface dates and the like. Upon creating a new project schedule in the software, the option planned start and planned completion dates should be appropriately inserted. This will allow the schedule calculations to identify negative float when projected dates slip past the planned completion date. All Owner-furnished materials and Owner interface dates shall have an early start/finish and late start/finish range. All Owner dates shall be related to the Contractor's Work with predecessor and successor logic such that float is correctly calculated on Owner-furnished materials and Owner interface dates.

9. Activity numbering shall be spaced (or gapped) to allow inclusion of new activities between existing activities while still maintaining a similarity of numbering for like activities. Numbering by area, level, etc. is encouraged to assist in analysis. The numbering may be alphanumeric to allow easier identification of areas, etc. At a minimum, the following code fields should be included:

   a. RESP – Responsibility (Owner, Owner's Representative, Sub Consultants, Jurisdictions, Key Third Parties, Contractors, Sub Contractor and, Vendors)

   b. PHAS – Phases

   c. AREA – Locations

   d. STEP – Steps or Sub AREAs

   e. ITEM – Specification Section Numbers

   f. CONO – Change Order Numbers

10. Activities that have started and are in progress shall be "scheduled" on each submitted schedule. Planned durations for remaining work and planned completions of remaining work on activities shall be used. Activities shall not "ride" the data date line, with scheduled completions being the remaining durations, unless the Contractor actually plans to complete work within the

remaining duration. Schedules submitted with activities "riding" the data date line will not be accepted by Owner.

11. The work breakdown and coding structure (WBS) should, at a minimum, incorporate the following:

    a. Milestones/Hammocks

    b. Deferred Approvals (by CSI, including Agency Approvals)

    c. Submittals (by CSI)

    d. Quality Control Activities, Pre-Installation Activities, Commissioning, Designer of Record Observations, Mock-ups

    e. Work

        i. mobilization

        ii. Grading/Underground Utilities

        iii. Foundations

        iv. Structures

        v. Exterior Skin and Roof

        vi. Interior Construction:

            a. By Floor

            b. By Major Unique Functional Area

            c. Electrical and MEP Equipment

            d. Unique Elements

            e. Equipment, including OFCI, OFOI and OFOICC

            f. Start-Up, Commissioning and Test & Balance (by system and element)

            g. Fire and Life-Safety and Systems Pre-Tests (by system and element)

            h. Fire and Life-Safety Jurisdictional Tests and Inspections (by system and element)

            i. Final Sign Offs by the Design Team and Jurisdictions

E. Schedule Layout and Sequence of Activities

1. The schedule layout shall be consistent with the Project Conditions and milestones set forth in the Contract documents. Work to complete each milestone shall be easily identifiable in the Contractor's overall schedule.

2. The layout shall be consistent with the Work required to meet the Contract milestone dates. In general, it is desired to have the Work needed to meet the Contract milestones be detailed activities that summarize, or roll-up to provide plan and status information reported for the milestone. The summarized overall schedule shall allow reporting of physical progress, cost, and manpower loading for the entire work. Owner intent will be to use the Contractor's schedule for milestones to summarize activities in Owner Master Schedule for all projects.

3. The Schedule layout shall be arranged to allow easy physical progress monitoring of physical areas. Essentially, each level and area within level or area and level within area or the like shall be broken down within the Schedule. These areas and levels shall summarize (or rollup) for reporting purposes. The Contractor shall establish the layout that is needed to meet his Contract responsibilities. The Contractor shall use his selected layout to coordinate with the Contractor's submitted progress payment applications, such that the Schedule, physical progress, the progress payment application and physical progress can be compared to determine the actual progress payments to be made to the Contractor.

4. The calendar is established including agreed working times and holidays. The calendar should not be altered during the project unless the Owner's Representative expressly agrees.

5. Only activity types such "Start Milestone," "Finish Milestone," and "Task" will be allowed with prior authorization by the Owner's Representative. Level of effort (LOE) activities may be used to summarize work as needed to produce summary level schedules for presentation purposes.

6. All activities should have both predecessor and successor logic ties that accurately represent the sequence and interdependence of all related activities except Project Start (which would not have any predecessors) and the last Contract Milestone (which would not have any successors).

7. Negative lags may not be used (there will be no exceptions to this requirement). FS – Finish-to-Start with zero (0) duration logic ties are preferable.

8. SF – Start-to-Finish logic ties are not acceptable.

F. Formats of Schedules Submitted to Owner's Representative

1. The formats of schedules (and schedule documents) shall be submitted to the Owner's Representative are described below. The formats described are solely for reporting information and analysis use with Owner and are not intended to direct the Contractor in his own methods of scheduling. The Contractor may use any schedule format needed for his own use in performing his responsibilities in the Contract.

2. All schedules (and schedule documents) shall be submitted with clear identification of Owner and Contractor's job numbers, schedule names,

descriptions, plot dates, data dates, file numbers, issue numbers and the like.

3. All Baseline, Progress and Summary Schedules submitted shall be formatted in a fixed sequence of summary and detail activities for the Contract duration for ease of reference in progress updates. This sequence shall be established by the Contractor and acceptable to the Owner's Representative. The sequence shall be set up in the software such that re-sequencing or reorganizing of the Schedules is not required to generate Owner required schedules and reports. This allows a one to one comparison of each Schedule issued with previous Schedules for analysis purposes, including the As-built Schedule.

4. All Baseline, Progress, and Summary Schedules shall be submitted with the activity description data listed from left to right, as follows: Activity ID, Activity Description, Original Duration, Remaining Duration, Total Float, Percent Complete, Early Start, and Early Finish. The early start and finish dates shall display an "A" after the dates if started (and finished). The Baseline Schedule shall also have the late start and late finish dates to the right of the early finish dates. The Owner reserves the right, at no cost, to require the Contractor to add the late start and late Finish dates to the Progress and Summary Schedules at any time.

5. The status bars on all schedules shall display the physical percent complete of progress. This same physical percent complete shall also be used in the data field. The percent complete of activity duration to show progress shall not be used.

6. The Baseline and Progress Schedules shall be submitted as color plotted time-scaled logic diagrams, with sufficient calendar and spacing to allow activity description information, bars and logic to be easily read. For each submitted schedule, a color plotted time-scaled logic diagram of just critical path activities shall be submitted. The fixed format, as described above, shall be used for all time-scaled logic diagram submittals throughout the duration of the project.

7. The Baseline, Progress, and Summary Schedules shall be submitted in bar chart format with activity data on the left side and bars on the right side. Logic shall not be displayed. Activity descriptions shall be displayed in the bar area. These bar chart schedules shall be 11" x 17" in size, and readable.

8. The Progress Schedule shall be submitted in an additional bar chart format that displays the previous month's Progress Schedule as a "Target" schedule for comparison use. The first Progress Schedule shall use the Baseline Schedule as the "Target" schedule. The "Target" bars shall be of smaller size, of different color, and below the current schedule's bars. Two color copies shall be submitted. The size shall be 11" x 17".

9. The Baseline and Progress Schedules shall be submitted in a bar chart format, as described above, but shall contain only the critical path activities. In the event that the Contractor's schedule has more than 25 percent of the activities as critical path or near critical path, the Contractor shall submit an additional bar chart schedule containing both the critical path and near critical path (as previously defined) activities.

10. The Baseline and Progress Schedules shall be submitted with a tabular report that displays the activity data previously listed in this subsection, sorted by Activity Number. Owner reserves the right to request up to two additional tabular reports, in a format requested by the Owner's Representative, with any schedule submittal, Time Impact Analysis, or Recovery Schedule, at no additional cost to Owner.

11. The Baseline and Progress Schedules shall be submitted with a predecessor and successor report in 8-1/2" x 11", black and white format, displaying the activity data previously listed in this subsection and the predecessors and successors for each activity. This shall be in the fixed activity format.

12. All schedules and schedule documents submitted to the Owner's Representative shall be in hard copy, as described above, and in the submitted format via electronic transmission that contains the schedule data files.

1.08 WEATHER IMPACTS AND DELAY

A. The Contractor agrees that he shall not be entitled to a time extension due to normal inclement weather, which can be expected at the project locale due to precipitation, snow, temperature, or other weather conditions. Normal inclement weather shall be defined as the most recent five-year average of accumulated record mean values from climatological data compiled by the US Department of Commerce, National Oceanic and Atmospheric Administration (NOAA) monitoring station nearest to the project site. The Contractor shall include in its Baseline Schedule and all Progress Schedules, allowances for normal inclement weather. Agreed rain days will be tied to specific activity sequences in specific seasons.

B. The Contractor shall only be entitled to an extension of Contract time, if the Contractor can substantiate that the severity of the weather was in excess of the normal inclement weather, and such weather conditions actually delayed the critical path of the Work. Time extensions will not be allowed for weather delays to non-critical path portions of the Work. Approved time extensions for abnormal weather conditions shall be deemed excusable and non-compensable.

C. No extension of time will be made for abnormal inclement weather after the portions of the Work in progress at the time are enclosed, except for site work. Site work delays at that time will be allowed only if the abnormal weather causes a critical path delay to the Contract Time or milestone date related to that site work. For the purpose of this paragraph, the term enclosed is defined to mean when the Work in an area of a structure or building is sufficiently closed in (portions of exterior walls up and portions of roof in place), so as to permit adequate conditioning of the air to allow the various trades to perform the Work.

D. The Contractor is responsible for providing any temporary weather enclosures necessary for Work to proceed without weather delays.

1.09 SCHEDULE UPDATES AND SCHEDULE (NETWORK) REVISIONS

A. During the course of the Work and issuance of the Progress Schedules, updating to reflect actual progress shall not be considered revisions to the Schedule. Such updating shall include revisions to activity durations and certain sequences on a monthly basis. Included in the Progress Schedule updates shall be activities and changes that have already been

reviewed and accepted by Owner such as the effect of accepted Owner changes, the agreed duration of delays caused by acts of God or other conditions or events which have affected the progress of the Work. The Progress Schedules, when formally submitted, shall display current progress, as well as displaying the forecast or projected Work to the end of the Project.

B. On all Progress Schedule submittals, the Contractor shall submit a printed list of all schedule logic changes along with the reason for each change. This list is an integral part of the Schedule submittal. This list shall be generated from the scheduling software and be the same logic included electronic transmission. Owner shall accept this list as part of its overall Progress Schedule submittal review and acceptance process.

C. Should the Contractor, after Owner acceptance of the Baseline Schedule and any Progress Schedules, desire to change the logic of its plan of construction, the Contractor shall submit in writing its requested revisions to the Owner's Representative. The request shall include a written narrative of the reasons for the activity and logic changes, a description of the logic for rescheduling the work, and the methods of maintaining adherence to critical and milestone dates. In addition, for changes affecting sequences of the Work, the Contractor shall provide a time-scaled logic diagram that compares the original sequence of work to the requested revised sequence of work. The Contractor shall submit the requested revision in a timely manner such that Owner may review the request submittal the same time frame and manner as required for other schedule submittals. Upon Owner acceptance of the request, the Contractor shall include the revision in the next upcoming Progress Schedule.

D. Neither the updating or revision of the Contractor's Progress Schedule, nor the submittal, updating, change or revision of any schedule (or schedule document) for the Owner's review and acceptance shall have the effect of amending or modifying, in any way, the Contract Time, any Contract completion date, or Contract milestone dates or of modifying or limiting in any way Contractor's obligations under this Contract.

1.10 TIME IMPACT ANALYSIS FOR CHANGED CONDITIONS

A. If delays are experienced that the Contractor believes are caused by Owner, the Contractor shall submit a formal written Time Impact Analysis (TIA). The TIA shall define the impact of each change or delay to the current accepted Progress Schedule. The TIA shall include a written narrative of the impact of such delays, and a schedule in time-scaled logic diagram format that depicts how the changed or delayed work affects other activities in the current accepted Progress Schedule.

B. In addition to the Contractor's presentation of the impact in the TIA, the Contractor shall include in the TIA, a mitigation plan that reduces or eliminates the claimed delay. The mitigation plan shall include specific Owner and Contractor actions as well as the cost to the Contractor to proceed with the mitigation.

C. In the event that the Contractor requests a Contract time extension, the time impacts to critical path activities in the current accepted Progress Schedule shall be clearly shown on a schedule in time-scaled logic diagram format. Extensions of time will be granted only to the extent that such changes or delays cause the time for the changed activity and related activities to exceed the total float along the affected path of activities at the time of Owner directive to proceed with the change or the actual commencement of the delay included in the TIA.

D. Schedule float is not for the exclusive use or benefit of either the Contractor or Owner. Neither Owner nor the Contractor "owns" the float. The project or Work "owns" the float. Liability for delay to Contract or milestone dates rests with the party whose action (or inaction) caused the delay beyond the float that was available at the time of the delaying action (or inaction).

E. Each formal TIA shall be submitted as an integral element of the Contractor's change order proposal.

F. A copy of Owner accepted TIA will be incorporated in the change order signed by Owner and the Contract Administrator for such change. Any changes to the Schedule will be incorporated into the next update of the Progress Schedule following the Owner's acceptance of the TIA.

G. The Contractor shall be responsible for all costs associated with the preparation of the TIA and the incorporation of accepted TIA's, or portion of TIA's, in the Progress Schedule.

H. If agreement is not reached on a TIA, or a portion of a TIA, the Progress Schedule, including any time extensions, shall be revised only to the extent accepted by Owner. For any TIA, or portion of a TIA, that is not accepted by Owner, the Contractor may submit a claim in accordance with the Conditions of the Contract.

1.11 RECOVERY SCHEDULE

A. Should any conditions exist, such that certain activities shown on the Contractor's Progress Schedule fall behind schedule to the extent that any of the mandatory critical dates or milestone completion dates are at risk of being delayed, the Contractor shall be required, at no cost to Owner, to prepare and submit to the Owner's Representative a supplementary Recovery Schedule. The Recovery Schedule shall be in a form and detail appropriate to the need, to explain and display to the Owner's Representative how the Contractor intends to re-schedule those activities to regain compliance with the last previously accepted Progress Schedule.

B. After determination by the Owner's Representative of the requirement for a Recovery Schedule, the Contractor shall, within five (5) calendar days, submit to Owner's Representative, the Recovery Schedule. The Recovery Schedule shall represent the Contractor's best judgment as to how the Contractor's work shall be reorganized such that the work may return to the accepted Progress Schedule within the maximum one-month period. The Recovery Schedule shall be prepared at a similar level of detail as the Progress Schedule and shall be based on the accepted Progress Schedule.

C. The Owner's Representative will have seven (7) calendar days to review the Recovery Schedule submittal. Any revisions that result from the Owners Representative's review shall be resubmitted within three (3) workdays by the Contractor for acceptance by the Contract Administrator. The accepted Recovery Schedule shall then be the Schedule that the Contractor shall use in planning, organizing, directing, coordinating, performing and executing the Work (including all activities of subcontractors, equipment vendors and suppliers) that is included on the Recovery Schedule. All other Work shall proceed per the accepted Progress Schedule.

D. No later than five (5) calendar days prior to the expiration of the Recovery Schedule, the Owner's Representative and Contractor will meet to determine whether the Contractor has regained compliance with the accepted Progress Schedule. At the direction of the

Owner's Representative, one of the following will occur:

1. If, in the opinion of the Owner's Representative, the Contractor is still behind schedule, the Contractor shall prepare another Recovery Schedule, at the Contractor's expense, to take effect for a maximum of one additional month from the start of the new Recovery Schedule.

2. If, in the opinion of the Owner's Representative, the Contractor has sufficiently regained compliance with the Progress Schedule, the use of the Progress Schedule shall be resumed.

1.12 TIMELINESS OF SCHEDULE DOCUMENT SUBMITTALS

A. The Schedule (and schedule documents) shall be submitted in a timely manner, as required by this Section. Failure to submit the Schedule and schedule documents on time and in an acceptable format shall result in withholding of payments and other remedies.

1.13 OWNER REVIEW OF SCHEDULE SUBMITTALS

A. All schedule documents shall be formally submitted and will be reviewed by Owner and returned to the Contractor with the required acceptance or action noted.

B. In providing review comments on schedule (and schedule document) submittals, and in this section, Contract Administrator may use the word "accepted", "not accepted" or variations thereof in conveying its review comments to the Contractor. At any time, the "accepted" or similar wording is used, such wording shall have no different meaning than similar wording, such as "no exceptions taken."

END OF SECTION

PART 1 GENERAL

1.01 SECTION INCLUDES

A. Submittals.

B. References and standards.

C. Testing and inspection agencies and services.

D. Control of installation.

E. Mock-ups.

F. Tolerances.

G. Manufacturers' field services.

H. Defect Assessment.

1.02 RELATED REQUIREMENTS

A. Section 00 6000 - General Conditions: Inspections and approvals required by public authorities.

B. Section 01 3000 - Administrative Requirements: Submittal procedures.

C. Section 01 6000 - Product Requirements: Requirements for material and product quality.

1.03 REFERENCE STANDARDS

A. ASTM C1021 - Standard Practice for Laboratories Engaged in Testing of Building Sealants; 2008 (Reapproved 2014).

B. ASTM C1077 - Standard Practice for Laboratories Testing Concrete and Concrete Aggregates for Use in Construction and Criteria for Laboratory Evaluation; 2014.

C. ASTM C1093 - Standard Practice for Accreditation of Testing Agencies for Masonry; 2013.

D. ASTM D3740 - Standard Practice for Minimum Requirements for Agencies Engaged in the Testing and/or Inspection of Soil and Rock as Used in Engineering Design and Construction; 2012a.

E. ASTM E329 - Standard Specification for Agencies Engaged in Construction Inspection, Testing, or Special Inspection; 2014a.

F. ASTM E543 - Standard Specification for Agencies Performing Nondestructive Testing; 2013.

G. OSSC - Oregon Structural Specialty Code, latest edition.

1.04 SUBMITTALS

A. See Section 01 3000 - Administrative Requirements, for submittal procedures.

B. Design Data: Submit for Consultant's knowledge as contract administrator for the limited purpose of assessing conformance with information given and the design concept expressed in the contract documents, or for Owner's information.

C. Test Reports: After each test/inspection, promptly submit two copies of report to Consultant and to Contractor.

1. Include:

a. Date issued.

b. Project title and number.

c. Name of inspector.

d. Date and time of sampling or inspection.

e. Identification of product and specifications section.

f. Location in the Project.

g. Type of test/inspection.

h. Date of test/inspection.

i. Results of test/inspection.

j. Conformance with Contract Documents.

k. When requested by Consultant, provide interpretation of results.

2. Test report submittals are for Consultant's knowledge as contract administrator for the limited purpose of assessing conformance with information given and the design concept expressed in the contract documents, or for Owner's information.

D. Certificates: When specified in individual specification sections, submit certification by the manufacturer and Contractor or installation/application subcontractor to Consultant, in quantities specified for Product Data.

1. Indicate material or product conforms to or exceeds specified requirements. Submit supporting reference data, affidavits, and certifications as appropriate.

2. Certificates may be recent or previous test results on material or product, but must be acceptable to Consultant.

E. Manufacturer's Instructions: When specified in individual specification sections, submit printed instructions for delivery, storage, assembly, installation, start-up, adjusting, and finishing, for the Owner's information. Indicate special procedures, perimeter conditions

requiring special attention, and special environmental criteria required for application or installation.

F. Manufacturer's Field Reports: Submit reports for Consultant's benefit as contract administrator or for Owner.

1. Submit for information for the limited purpose of assessing conformance with information given and the design concept expressed in the contract documents.

G. Erection Drawings: Submit drawings for Consultant's benefit as contract administrator or for Owner.

1. Submit for information for the limited purpose of assessing conformance with information given and the design concept expressed in the contract documents.

2. Data indicating inappropriate or unacceptable Work may be subject to action by Consultant or Owner.

1.05 REFERENCES AND STANDARDS

A. For products and workmanship specified by reference to a document or documents not included in the Project Manual, also referred to as reference standards, comply with requirements of the standard, except when more rigid requirements are specified or are required by applicable codes.

B. Conform to reference standard of date of issue current on date of Contract Documents, except where a specific date is established by applicable code.

C. Obtain copies of standards where required by product specification sections.

D. Maintain copy at project site during submittals, planning, and progress of the specific work, until Substantial Completion.

E. Should specified reference standards conflict with Contract Documents, request clarification from Consultant before proceeding.

F. Neither the contractual relationships, duties, or responsibilities of the parties in Contract nor those of Consultant shall be altered from the Contract Documents by mention or inference otherwise in any reference document.

1.06 TESTING AND INSPECTION AGENCIES AND SERVICES

A. Owner will employ and pay for services of an independent testing agency to perform other specified testing.

B. Employment of agency in no way relieves Contractor of obligation to perform Work in accordance with requirements of Contract Documents.

PART 2 PRODUCTS - NOT USED

PART 3 EXECUTION

3.01 CONTROL OF INSTALLATION

A. Monitor quality control over suppliers, manufacturers, products, services, site conditions, and workmanship, to produce Work of specified quality.

B. Comply with manufacturers' instructions, including each step in sequence.

C. Should manufacturers' instructions conflict with Contract Documents, request clarification from Consultant before proceeding.

D. Comply with specified standards as minimum quality for the Work except where more stringent tolerances, codes, or specified requirements indicate higher standards or more precise workmanship.

E. Have Work performed by persons qualified to produce required and specified quality.

F. Verify that field measurements are as indicated on shop drawings or as instructed by the manufacturer.

G. Secure products in place with positive anchorage devices designed and sized to withstand stresses, vibration, physical distortion, and disfigurement.

3.02 MOCK-UPS

A. Before installing portions of the Work where mock-ups are required, construct mock-ups in location and size indicated for each form of construction and finish required to comply with the following requirements, using materials indicated for the completed Work. The purpose of mock-up is to demonstrate the proposed range of aesthetic effects and workmanship.

B. Accepted mock-ups establish the standard of quality the Consultant will use to judge the Work.

C. Integrated Exterior Mock-ups: construct integrated exterior mock-up as indicated on Drawings. Coordinate installation of exterior envelope materials and products as required in individual Specification Sections. Provide adequate supporting structure for mock-up materials as necessary.

D. Notify Consultant fifteen (15) working days in advance of dates and times when mockups will be constructed.

E. Provide supervisory personnel who will oversee mock-up construction. Provide workers that will be employed during the construction at Project.

F. Tests shall be performed under provisions identified in this section and identified in the respective product specification sections.

G. Assemble and erect specified items with specified attachment and anchorage devices, flashings, seals, and finishes.

H. Obtain Consultant's approval of mock-ups before starting work, fabrication, or construction.

I. Accepted mock-ups shall be a comparison standard for the remaining Work.

J. Where mock-up has been accepted by Consultant and is specified in product specification sections to be removed, protect mock-up throughout construction, remove mock-up and clear area when directed to do so by Consultant.

K. Where possible salvage and recycle the demolished mock-up materials.

3.03 TOLERANCES

A. Monitor fabrication and installation tolerance control of products to produce acceptable Work. Do not permit tolerances to accumulate.

B. Comply with manufacturers' tolerances. Should manufacturers' tolerances conflict with Contract Documents, request clarification from Consultant before proceeding.

C. Adjust products to appropriate dimensions; position before securing products in place.

3.04 TESTING AND INSPECTION

A. See individual specification sections and the current building code for testing and inspection required.

B. Testing Agency Duties:

1. Provide qualified personnel at site. Cooperate with Consultant and Contractor in performance of services.

2. Perform specified sampling and testing of products in accordance with specified standards.

3. Ascertain compliance of materials and mixes with requirements of Contract Documents.

4. Promptly notify Consultant and Contractor of observed irregularities or non-conformance of Work or products.

5. Perform additional tests and inspections required by Consultant.

6. Submit reports of all tests/inspections specified.

C. Limits on Testing/Inspection Agency Authority:

1. Agency may not release, revoke, alter, or enlarge on requirements of Contract Documents.

2. Agency may not approve or accept any portion of the Work.

3. Agency may not assume any duties of Contractor.

4. Agency has no authority to stop the Work.

D. Contractor Responsibilities:

1. Deliver to agency at designated location, adequate samples of materials proposed to be used that require testing, along with proposed mix designs.

2. Cooperate with laboratory personnel, and provide access to the Work and to manufacturers' facilities.

3. Provide incidental labor and facilities:

a. To provide access to Work to be tested/inspected.

b. To obtain and handle samples at the site or at source of Products to be tested/inspected.

c. To facilitate tests/inspections.

d. To provide storage and curing of test samples.

4. Notify Consultant and laboratory 24 hours prior to expected time for operations requiring testing/inspection services.

5. Employ services of an independent qualified testing laboratory and pay for additional samples, tests, and inspections required by Contractor beyond specified requirements.

6. Arrange with Owner's agency and pay for additional samples, tests, and inspections required by Contractor beyond specified requirements.

E. Re-testing required because of non-conformance to specified requirements shall be performed by the same agency on instructions by Consultant.

F. Re-testing required because of non-conformance to specified requirements shall be paid for by Contractor. Payment for re testing will be charged to the Contractor by deducting testing charges from the Contract Price.

3.05 MANUFACTURERS' FIELD SERVICES

A. When specified in individual specification sections, require material or product suppliers or manufacturers to provide qualified staff personnel to observe site conditions, conditions of surfaces and installation, quality of workmanship, start-up of equipment, test, adjust and balance of equipment as applicable, and to initiate instructions when necessary.

B. Submit qualifications of observer to Consultant 30 days in advance of required observations.

1. Observer subject to approval of Consultant.

2. Observer subject to approval of Owner.

C. Report observations and site decisions or instructions given to applicators or installers that are supplemental or contrary to manufacturers' written instructions.

3.06 DEFECT ASSESSMENT

A. Replace Work or portions of the Work not conforming to specified requirements.

END OF SECTION

PART 1 GENERAL

1.01 SECTION INCLUDES

A. Temporary telecommunications services.

B. Temporary sanitary facilities.

C. Temporary Controls: Barriers, enclosures, and fencing.

D. Security requirements.

E. Vehicular access and parking.

F. Waste removal facilities and services.

G. Project identification sign.

H. Field offices.

1.02 RELATED REQUIREMENTS

A. Section 01 5100 - Temporary Utilities.

1.03 REFERENCE STANDARDS

A. ASTM E84 - Standard Test Method for Surface Burning Characteristics of Building Materials; 2015a.

1.04 TELECOMMUNICATIONS SERVICES

A. Provide, maintain, and pay for telecommunications services to field office at time of project mobilization.

B. Telecommunications services shall include:

1. Windows-based personal computer dedicated to project telecommunications, with necessary software and laser printer.

2. Telephone Land Lines: One line, minimum; one handset per line.

   a. Cell phone service with voice mail for the project superintendent is an acceptable alternative to a fixed telephone device for this project.

3. Internet Connections: Minimum of one; DSL modem or faster.

4. Email: Account/address reserved for project use.

5. Facsimile Service: Minimum of one dedicated fax machine/printer, with dedicated phone line.

   a. This service may reside at the Contractor's office for this project if someone in the office can regularly check the device for messages.

C. Provide a digital camera at the site capable of taking pictures of job conditions and sending.jpg images via e-mail to Owner and Architect.

1.05 TEMPORARY SANITARY FACILITIES

A. Provide and maintain required facilities and enclosures. Provide at time of project mobilization.

B. Maintain daily in clean and sanitary condition.

1.06 BARRIERS

A. Provide barriers to protect workers on the site and the public against injury.

B. Provide barriers to prevent unauthorized entry to construction areas, to prevent access to areas that could be hazardous to workers or the public, to allow for owner's use of site and to protect existing facilities and adjacent properties from damage from construction operations and demolition.

C. Provide barricades and covered walkways required by governing authorities for public rights-of-way and for public access to existing building.

D. Provide protection for plants designated to remain. Replace damaged plants.

E. Protect non-owned vehicular traffic, stored materials, site, and structures from damage.

F. Traffic Controls: Provide as required to maintain safe working environment for Owner and Contractor personnel using the site.

1.07 TEMPORARY FIRE PROTECTION

A. Provide and maintain necessary facilities and equipment to safeguard Project against Fire Damage.

1.08 FENCING

A. Provide 6 foot high fence around construction site; equip with vehicular and pedestrian gates with locks.

1.09 EXTERIOR ENCLOSURES

A. Provide temporary insulated weather tight closure of exterior openings to accommodate acceptable working conditions and protection for Products, to allow for temporary heating and maintenance of required ambient temperatures identified in individual specification sections, and to prevent entry of unauthorized persons. Provide access doors with self-closing hardware and locks.

1.10 INTERIOR ENCLOSURES

A. Provide temporary partitions and ceilings as indicated to separate work areas from Owner-occupied areas, to prevent penetration of dust and moisture into Owner-occupied areas, and to prevent damage to existing materials and equipment.

B. Construction: Framing and reinforced polyethylene sheet materials with closed joints and sealed edges at intersections with existing surfaces:

1. Maximum flame spread rating of 75 in accordance with ASTM E84.

1.11 SECURITY

A. Provide security and facilities to protect Work, existing facilities, and Owner's operations from unauthorized entry, vandalism, or theft.

B. Coordinate with Owner's security program.

1.12 VEHICULAR ACCESS AND PARKING

A. Comply with regulations relating to use of streets and sidewalks, access to emergency facilities, and access for emergency vehicles.

B. Coordinate access and haul routes with governing authorities and Owner.

C. Provide and maintain access to fire hydrants, free of obstructions.

D. Provide means of removing mud from vehicle wheels before entering streets.

E. Designated existing on-site roads may be used for construction traffic.

F. Provide temporary parking areas to accommodate construction personnel. When site space is not adequate, provide additional off-site parking.

G. Existing parking areas may be used for construction parking.

H. Do not allow vehicle parking on existing pavement.

I. Use designated drop off and delivery areas for short term parking only.

J. Do not use Owner's Parking Lots for overnight vehicle storage.

K. Designate one parking space for Owner and Architect use.

L. Repair existing facilities damaged by use, to original condition.

M. Provide trained and equipped flag persons to regulate traffic when construction operations or traffic encroach on public traffic lanes.

1.13 MATERIAL STORAGE SPACE

A. Maintain within Project Limits in accordance with Architect's and Owner's instructions. Do not block exitways or overload structure.

1.14 WASTE REMOVAL

A. See Section 01 7419 - Construction Waste Management and Disposal, for additional requirements.

B. Encourage the separation of waste materials and sorting and disposal at a local recycling center.

C. Provide waste removal facilities and services as required to maintain the site in clean and orderly condition.

D. Provide containers with lids. Remove trash from site periodically.

E. If materials to be recycled or re-used on the project must be stored on-site, provide suitable non-combustible containers; locate containers holding flammable material outside the structure unless otherwise approved by the authorities having jurisdiction.

F. Open free-fall chutes are not permitted. Terminate closed chutes into appropriate containers with lids.

1.15 PROJECT IDENTIFICATION

A. A project sign is not required for this project.

B. No other signs are allowed without Owner permission except those required by law.

1.16 FIELD OFFICES

A. Office: Weathertight, with lighting, electrical outlets, heating, cooling equipment, and equipped with sturdy furniture and storage space for drawings and all project documents.

B. Provide space for Project meetings, with table and chairs to accommodate 8 persons.

C. Provide office within 15 days from Notice to Proceed, maintain, and remove prior to Substantial Completion or as agreed by Owner.

D. Contractor shall provide a field office, minimum 8’x20’ for Owners Rep: Weathertight, with lighting, electrical outlets, internet, heating, cooling equipment, and equipped with sturdy furniture and storage space for drawings and all project documents. Provide separate keyed lock.

1. Provide space for Project meetings, with table and chairs to accommodate 8 persons.

2. Provide office within 15 days from Notice to Proceed, maintain, and remove prior to Substantial Completion or as agreed by Owner.

3. Provide Utilities: power and internet.

1.17 VISITOR PERSONAL PROTECTION EQUIPMENT

A. Provide six sets of Personal Protection Equipment (PPE) for use by official visitors to the project site during construction. Visitor PPE shall include as a minimum, hard hat and protective eye goggles. Provide high visibility garments when moving vehicles are in use on the construction site. Store in Field Office and reserve for use by visitors to the project site.

B. Maintain in good condition through the course of the project and replace equipment that does not meet personal safety requirements.

1.18 REMOVAL OF UTILITIES, FACILITIES, AND CONTROLS

A. Remove temporary utilities, equipment, facilities, materials, prior to Date of Substantial Completion inspection.

B. Remove underground installations to a minimum depth of 2 feet. Grade site as indicated.

C. Clean and repair damage caused by installation or use of temporary work.

D. Restore existing facilities used during construction to original condition.

E. Restore new permanent facilities used during construction to specified condition.

PART 2 PRODUCTS - NOT USED

PART 3 EXECUTION - NOT USED

END OF SECTION

PART 1 GENERAL

1.01 SECTION INCLUDES

A. Temporary Utilities: Electricity, lighting, heat, ventilation, and water.

1.02 RELATED REQUIREMENTS

A. Section 01 5000 - Temporary Facilities and Controls:

1. Temporary telecommunications services for administrative purposes.

2. Temporary sanitary facilities required by law.

1.03 CONSERVATION

A. It is the Owner's practice to utilize natural resources responsibly. Exercise appropriate energy and water conservation measures at all times.

1.04 TEMPORARY ELECTRICITY

A. Cost of Labor, Material and Energy: By Contractor.

B. Provide power service required from utility source.

C. Provide power outlets for construction operations, with branch wiring and distribution boxes located at each floor. Provide flexible power cords as required.

D. Provide main service disconnect and over-current protection at convenient location and meter.

E. Permanent convenience receptacles may be utilized during construction.

F. Provide adequate distribution equipment, wiring, and outlets to provide single phase branch circuits for power and lighting.

1.05 TEMPORARY LIGHTING FOR CONSTRUCTION PURPOSES

A. Provide and maintain incandescent lighting for construction operations to achieve a minimum lighting level of 2 watt/sq ft.

B. Provide and maintain 1 watt/sq ft lighting to exterior staging and storage areas after dark for security purposes.

C. Provide and maintain 0.25 watt/sq ft H.I.D. lighting to interior work areas after dark for security purposes.

D. Provide branch wiring from power source to distribution boxes with lighting conductors, pigtails, and lamps as required.

E. Maintain lighting and provide routine repairs.

F. Permanent building lighting may be utilized during construction.

1.06 TEMPORARY HEATING

A. Cost of of Labor, Material and Energy: By Contractor.

B. Provide heating devices and heat as needed to maintain specified conditions for construction operations.

C. Maintain minimum ambient temperature of 50 degrees F in areas where construction is in progress, unless indicated otherwise in specifications.

1.07 TEMPORARY COOLING

A. Provide cooling devices and cooling as needed to maintain specified conditions for construction operations.

B. Maintain maximum ambient temperature of 80 degrees F in areas where construction is in progress, unless indicated otherwise in specifications.

1.08 TEMPORARY VENTILATION

A. Existing ventilation equipment may not be used.

1.09 TEMPORARY WATER SERVICE

A. Cost of Labor, Materials, and Water Used: By Contractor.

B. Provide and maintain suitable quality water service for construction operations at time of project mobilization.

C. Connect to existing water source.

1. Exercise measures to conserve water.

D. Extend branch piping with outlets located so water is available by hoses with threaded connections. Provide temporary pipe insulation to prevent freezing.

PART 2 PRODUCTS - NOT USED

PART 3 EXECUTION - NOT USED

END OF SECTION

PART 1 GENERAL

1.01 SECTION INCLUDES

A. Prevention of erosion due to construction activities.

B. Prevention of sedimentation of waterways, open drainage ways, and storm and sanitary sewers due to construction activities.

C. Restoration of areas eroded due to insufficient preventive measures.

D. Compensation of Owner for fines levied by authorities having jurisdiction due to non-compliance by Contractor.

1.02 REFERENCE STANDARDS

A. ASTM D4355 - Standard Test Method for Deterioration of Geotextiles by Exposure to Light, Moisture, and Heat in a Xenon Arc Type Apparatus; 2007.

B. ASTM D4491 - Standard Test Methods for Water Permeability of Geotextiles by Permittivity; 1999a (Reapproved 2014).

C. ASTM D4533 - Standard Test Method for Trapezoid Tearing Strength of Geotextiles; 2011.

D. ASTM D4632/D4632M - Standard Test Method for Grab Breaking Load and Elongation of Geotextiles; 2015a.

E. ASTM D4751 - Standard Test Method for Determining Apparent Opening Size of a Geotextile; 2012.

F. ASTM D4873 - Standard Guide for Identification, Storage, and Handling of Geosynthetic Rolls and Samples; 2002 (Reapproved 2009).

1.03 PERFORMANCE REQUIREMENTS

A. Comply with all requirements of state and local jurisdictions for erosion and sedimentation control.

B. Develop and follow an Erosion and Sedimentation Prevention Plan and submit periodic inspection reports.

C. Do not begin clearing, grading, or other work involving disturbance of ground surface cover until applicable permits have been obtained; furnish all documentation required to obtain applicable permits.

1. An erosion control permit is required. The Owner shall apply, pay for, and secure the permit. The contractor shall comply with the construction erosion control permit.

2. Owner will withhold payment to Contractor equivalent to all fines resulting from non-compliance with applicable regulations.

D. Timing: Put preventive measures in place as soon as possible after disturbance of surface cover and before precipitation occurs.

E. Storm Water Runoff: Control increased storm water runoff due to disturbance of surface cover due to construction activities for this project.

1. Prevent runoff into storm and sanitary sewer systems, including open drainage channels, in excess of actual capacity or amount allowed by authorities having jurisdiction, whichever is less.

2. Anticipate runoff volume due to the most extreme short term and 24-hour rainfall events that might occur in 25 years.

F. Erosion On Site: Minimize wind, water, and vehicular erosion of soil on project site due to construction activities for this project.

1. Control movement of sediment and soil from temporary stockpiles of soil.

2. Prevent development of ruts due to equipment and vehicular traffic.

3. If erosion occurs due to non-compliance with these requirements, restore eroded areas at no cost to Owner.

G. Erosion Off Site: Prevent erosion of soil and deposition of sediment on other properties caused by water leaving the project site due to construction activities for this project.

1. Prevent windblown soil from leaving the project site.

2. Prevent tracking of mud onto public roads outside site.

3. Prevent mud and sediment from flowing onto sidewalks and pavements.

4. If erosion occurs due to non-compliance with these requirements, restore eroded areas at no cost to Owner.

H. Sedimentation of Waterways On Site: Prevent sedimentation of waterways on the project site, including rivers, streams, lakes, ponds, open drainage ways, storm sewers, and sanitary sewers.

1. If sedimentation occurs, install or correct preventive measures immediately at no cost to Owner; remove deposited sediments; comply with requirements of authorities having jurisdiction.

2. If sediment basins are used as temporary preventive measures, pump dry and remove deposited sediment after each storm.

I. Sedimentation of Waterways Off Site: Prevent sedimentation of waterways off the project site, including rivers, streams, lakes, ponds, open drainage ways, storm sewers, and sanitary sewers.

1. If sedimentation occurs, install or correct preventive measures immediately at no cost to Owner; remove deposited sediments; comply with requirements of authorities having jurisdiction.

J. Open Water: Prevent standing water that could become stagnant.

K. Maintenance: Maintain temporary preventive measures until permanent measures have been established.

1.04 WORK INCLUDED BUT SPECIFIED ELSEWHERE

A. Erosion control products and construction work within any jurisdictional right-of-way shall conform to the requirments of that jurisdiction, in addition to the requirements herein and those shown on the private improvement drawings.

B. Erosion control products and construction work within the any jurisdictional right-of-way shall conform to the requirments of that jurisdiction, 1990 Standard Specifications for Public Works Construction published by the Oregon Chapter of APWA (Amended in 1996) and to the requirements herein and those shown on the private improvement drawings.

1.05 SUBMITTALS

A. See Section 01 3000 - Administrative Requirements, for submittal procedures.

B. Erosion and Sedimentation Control Plan:

1. Submit within 2 weeks after Notice to Proceed.

2. Include:

a. Site plan identifying soils and vegetation, existing erosion problems, and areas vulnerable to erosion due to topography, soils, vegetation, or drainage.

b. Site plan showing grading; new improvements; temporary roads, traffic accesses, and other temporary construction; and proposed preventive measures.

c. Where extensive areas of soil will be disturbed, include storm water flow and volume calculations, soil loss predictions, and proposed preventive measures.

d. Schedule of temporary preventive measures, in relation to ground disturbing activities.

e. Other information required by law.

f. Format required by law is acceptable, provided any additional information specified is also included.

3. Obtain the approval of the Plan by authorities having jurisdiction.

4. Obtain the approval of the Plan by Owner.

C. Certificate: Mill certificate for silt fence fabric attesting that fabric and factory seams comply with specified requirements, signed by legally authorized official of manufacturer; indicate actual minimum average roll values; identify fabric by roll identification numbers.

D. Inspection Reports: Submit report of each inspection; identify each preventive measure, indicate condition, and specify maintenance or repair required and accomplished.

PART 2 PRODUCTS

2.01 MATERIALS

A. Mulch: Use one of the following:

1. Straw or hay.
2. Wood waste, chips, or bark.
3. Erosion control matting or netting.
4. Polyethylene film, where specifically indicated only.

B. Grass Seed For Temporary Cover: Select a species appropriate to climate, planting season, and intended purpose. If same area will later be planted with permanent vegetation, do not use species known to be excessively competitive or prone to volunteer in subsequent seasons.

C. Bales: Air dry, rectangular straw bales.

1. Cross Section: 14 by 18 inches, minimum.
2. Bindings: Wire or string, around long dimension.

D. Bale Stakes: One of the following, minimum 3 feet long:

1. Steel U- or T-section, with minimum mass of 1.33 lb per linear foot.
2. Wood, 2 by 2 inches in cross section.

E. Silt Fence Fabric: Polypropylene geotextile resistant to common soil chemicals, mildew, and insects; non-biodegradable; in longest lengths possible; fabric including seams with the following minimum average roll lengths:

1. Average Opening Size: 30 U.S. Std. Sieve, maximum, when tested in accordance with ASTM D4751.
2. Permittivity: 0.05 sec^-1, minimum, when tested in accordance with ASTM D4491.
3. Ultraviolet Resistance: Retaining at least 70 percent of tensile strength, when tested in accordance with ASTM D4355 after 500 hours exposure.
4. Tensile Strength: 100 lb-f, minimum, in cross-machine direction; 124 lb-f, minimum, in machine direction; when tested in accordance with ASTM D4632/D4632M.
5. Elongation: 15 to 30 percent, when tested in accordance with ASTM D4632/D4632M.
6. Tear Strength: 55 lb-f, minimum, when tested in accordance with ASTM D4533.

7. Color: Manufacturer's standard, with embedment and fastener lines preprinted.

F. Silt Fence Posts: One of the following, minimum 5 feet long:

1. Softwood, 4 by 4 inches in cross section.

G. Gravel: See Section 32 1123 for aggregate.

PART 3 EXECUTION

3.01 EXAMINATION

A. Examine site and identify existing features that contribute to erosion resistance; maintain such existing features to greatest extent possible.

3.02 PREPARATION

A. Schedule work so that soil surfaces are left exposed for the minimum amount of time.

3.03 SCOPE OF PREVENTIVE MEASURES

A. In all cases, if permanent erosion resistant measures have been installed temporary preventive measures are not required.

B. Construction Entrances: Traffic-bearing aggregate surface.

1. Width: As required; 20 feet, minimum.

2. Length: 50 feet, minimum.

3. Provide at each construction entrance from public right-of-way and where noted on drawings.

4. Where necessary to prevent tracking of mud onto right-of-way, provide wheel washing area out of direct traffic lane, with drain into sediment trap or basin.

C. Linear Sediment Barriers: Made of silt fences.

1. Provide linear sediment barriers:

a. Along downhill perimeter edge of disturbed areas, including soil stockpiles.

2. Space sediment barriers with the following maximum slope length upslope from barrier:

a. Slope of Less Than 2 Percent: 100 feet..

b. Slope Between 2 and 5 Percent: 75 feet.

c. Slope Between 5 and 10 Percent: 50 feet.

d. Slope Between 10 and 20 Percent: 25 feet.

e. Slope Over 20 Percent: 15 feet.

D. Storm Drain Curb Inlet Sediment Trap: Protect each curb inlet using one of the following measures:

1. Filter fabric wrapped around hollow concrete blocks blocking entire inlet face area; use one piece of fabric wrapped at least 1-1/2 times around concrete blocks and secured to prevent dislodging; orient cores of blocks so runoff passes into inlet.

2. Straw bale row blocking entire inlet face area; anchor into pavement.

E. Storm Drain Drop Inlet Sediment Traps: As detailed on drawings.

F. Temporary Splash Pads: Stone aggregate over filter fabric; size to suit application; provide at downspout outlets and storm water outlets.

G. Soil Stockpiles: Protect using one of the following measures:

1. Cover with polyethylene film, secured by placing soil on outer edges.

2. Cover with mulch at least 4 inches thickness of pine needles, sawdust, bark, wood chips, or shredded leaves, or 6 inches of straw or hay.

H. Mulching: Use only for areas that may be subjected to erosion for less than 6 months.

1. Wood Waste: Use only on slopes 3:1 or flatter; no anchoring required.

I. Temporary Seeding: Use where temporary vegetated cover is required.

3.04 INSTALLATION

A. Traffic-Bearing Aggregate Surface:

1. Excavate minimum of 6 inches.

2. Place geotextile fabric full width and length, with minimum 12 inch overlap at joints.

3. Place and compact at least 6 inches of 1.5 to 3.5 inch diameter stone.

B. Silt Fences:

1. Store and handle fabric in accordance with ASTM D4873.

2. Where slope gradient is less than 3:1 or barriers will be in place less than 6 months, use nominal 16 inch high barriers with minimum 36 inch long posts spaced at 6 feet maximum, with fabric embedded at least 4 inches in ground.

3. Where slope gradient is steeper than 3:1 or barriers will be in place over 6 months, use nominal 28 inch high barriers, minimum 48 inch long posts spaced at 6 feet maximum, with fabric embedded at least 6 inches in ground.

4. Where slope gradient is steeper than 3:1 and vertical height of slope between barriers is more than 20 feet, use nominal 32 inch high barriers with woven wire reinforcement and steel posts spaced at 4 feet maximum, with fabric embedded at least 6 inches in ground.

5. Install with top of fabric at nominal height and embedment as specified.

6. Do not splice fabric width; minimize splices in fabric length; splice at post only, overlapping at least 18 inches, with extra post.

7. Fasten fabric to wood posts using one of the following:

   a. Four nails per post with 3/4 inch diameter flat or button head, 1 inch long, and 14 gage, 0.083 inch shank diameter.

   b. Five staples per post with at least 17 gage, 0.0453 inch wire, 3/4 inch crown width and 1/2 inch long legs.

8. Wherever runoff will flow around end of barrier or over the top, provide temporary splash pad or other outlet protection; at such outlets in the run of the barrier, make barrier not more than 12 inches high with post spacing not more than 4 feet.

C. Straw Bale Rows:

1. Install bales in continuous rows with ends butting tightly, with one bale at each end of row turned uphill.

2. Install bales so that bindings are not in contact with the ground.

3. Embed bales at least 4 inches in the ground.

4. Anchor bales with at least two stakes per bale, driven at least 18 inches into the ground; drive first stake in each bale toward the previously placed bale to force bales together.

5. Fill gaps between ends of bales with loose straw wedged tightly.

6. Place soil excavated for trench against bales on the upslope side of the row, compacted.

D. Mulching Over Large Areas:

1. Dry Straw and Hay: Apply 2-1/2 tons per acre; anchor using dull disc harrow or emulsified asphalt applied using same spraying machine at 100 gallons of water per ton of mulch.

2. Wood Waste: Apply 6 to 9 tons per acre.

3. Erosion Control Matting: Comply with manufacturer's instructions.

E. Mulching Over Small and Medium Areas:

1. Dry Straw and Hay: Apply 4 to 6 inches depth.

2. Wood Waste: Apply 2 to 3inches depth.

3. Erosion Control Matting: Comply with manufacturer's instructions.

F. Temporary Seeding:

1. When hydraulic seeder is used, seedbed preparation is not required.

2. When surface soil has been sealed by rainfall or consists of smooth undisturbed cut slopes, and conventional or manual seeding is to be used, prepare seedbed by scarifying sufficiently to allow seed to lodge and germinate.

3. If temporary mulching was used on planting area but not removed, apply nitrogen fertilizer at 1 pound per 1000 sq ft.

4. On soils of very low fertility, apply 10-10-10 fertilizer at rate of 12 to 16 pounds per 1000 sq ft.

5. Incorporate fertilizer into soil before seeding.

6. Apply seed uniformly; if using drill or cultipacker seeders place seed 1/2 to 1 inch deep.

7. Irrigate as required to thoroughly wet soil to depth that will ensure germination, without causing runoff or erosion.

8. Repeat irrigation as required until grass is established.

3.05 MAINTENANCE

A. Inspect preventive measures weekly, within 24 hours after the end of any storm that produces 0.5 inches or more rainfall at the project site, and daily during prolonged rainfall.

B. Repair deficiencies immediately.

C. Silt Fences:

1. Promptly replace fabric that deteriorates unless need for fence has passed.

2. Remove silt deposits that exceed one-third of the height of the fence.

3. Repair fences that are undercut by runoff or otherwise damaged, whether by runoff or other causes.

D. Straw Bale Rows:

1. Promptly replace bales that fall apart or otherwise deteriorate unless need has passed.

2. Remove silt deposits that exceed one-half of the height of the bales.

3. Repair bale rows that are undercut by runoff or otherwise damaged, whether by runoff or other causes.

E. Clean out temporary sediment control structures weekly and relocate soil on site.

F. Place sediment in appropriate locations on site; do not remove from site.

3.06 CLEAN UP

A. Remove temporary measures after permanent measures have been installed, unless permitted to remain by Architect.

B. Clean out temporary sediment control structures that are to remain as permanent measures.

C. Where removal of temporary measures would leave exposed soil, shape surface to an acceptable grade and finish to match adjacent ground surfaces.

END OF SECTION

PART 1 GENERAL

1.01 SECTION INCLUDES

A. Construction procedures to promote adequate indoor air quality after construction.

B. Building flush-out after construction and before occupancy.

C. Testing indoor air quality after completion of construction.

1.02 PROJECT GOALS

A. Dust and Airborne Particulates: Prevent deposition of dust and other particulates in HVAC ducts and equipment.

1. Cleaning of ductwork is not contemplated under this Contract.

2. Contractor shall bear the cost of cleaning required due to failure to protect ducts and equipment from construction dust.

B. Airborne Contaminants: Procedures and products have been specified to minimize indoor air pollutants.

1. Furnish products meeting the specifications.

2. Avoid construction practices that could result in contamination of installed products leading to indoor air pollution.

1.03 RELATED REQUIREMENTS

A. Section 01 4000 - Quality Requirements: Testing and inspection services.

B. Section 01 6116 - Volatile Organic Compound (VOC) Content Restrictions.

1.04 REFERENCE STANDARDS

A. ASTM D5197 - Standard Test Method for Determination of Formaldehyde and Other Carbonyl Compounds in Air (Active Sampler Methodology); 2009.

B. CAL (CDPH SM) - Standard Method for the Testing and Evaluation of Volatile Organic Chemical Emissions From Indoor Sources Using Environmental Chambers; California Department of Public Health; v1.1, 2010.

C. EPA 600/4-90/010 - Compendium of Methods for the Determination of Air Pollutants in Indoor Air; April 1990.

D. EPA 625/R-96/010b - Compendium of Methods for the Determination of Toxic Organic Compounds in Ambient Air; January 1999.

E. SMACNA (OCC) - IAQ Guidelines for Occupied Buildings Under Construction; 2007.

1.05 DEFINITIONS

A. Adsorptive Materials: Gypsum board, acoustical ceiling tile and panels, carpet and carpet tile, fabrics, fibrous insulation, and other similar products.

B. Contaminants: Gases, vapors, regulated pollutants, airborne mold and mildew, and the like, as specified.

C. Particulates: Dust, dirt, and other airborne solid matter.

D. Wet Work: Concrete, plaster, coatings, and other products that emit water vapor or volatile organic compounds during installation, drying, or curing.

1.06 SUBMITTALS

A. See Section 01 3000 - Administrative Requirements, for submittal procedures.

B. Indoor Air Quality Management Plan: Describe in detail measures to be taken to promote adequate indoor air quality upon completion; use SMACNA (OCC) as a guide.

1. Submit not less than 60 days before enclosure of building.
2. Identify potential sources of odor and dust.
3. Identify construction activities likely to produce odor or dust.
4. Identify areas of project potentially affected, especially occupied areas.
5. Evaluate potential problems by severity and describe methods of control.
6. Describe construction ventilation to be provided, including type and duration of ventilation, use of permanent HVAC systems, types of filters and schedule for replacement of filters.
7. Describe cleaning and dust control procedures.

C. Air Contaminant Test Plan: Identify:

1. Testing agency qualifications.
2. Locations and scheduling of air sampling.
3. Test procedures, in detail.
4. Test instruments and apparatus.
5. Sampling methods.

D. Air Contaminant Test Reports: Show:

1. Location where each sample was taken, and time.
2. Test values for each air sample; average the values of each set of 3.
3. HVAC operating conditions.
4. Certification of test equipment calibration.
5. Other conditions or discrepancies that might have influenced results.

PART 2 PRODUCTS

2.01 MATERIALS

A. Low VOC Materials: See Section 01 6116.

B. Low VOC Materials: See individual sections for specific requirements for materials with low VOC content.

PART 3 EXECUTION

3.01 CONSTRUCTION PROCEDURES

A. Prevent the absorption of moisture and humidity by adsorptive materials by:

1. Sequencing the delivery of such materials so that they are not present in the building until wet work is completed and dry.

2. Delivery and storage of such materials in fully sealed moisture-impermeable packaging.

3. Provide sufficient ventilation for drying within reasonable time frame.

B. Begin construction ventilation when building is substantially enclosed.

C. If extremely dusty or dirty work must be conducted inside the building, shut down HVAC systems for the duration; remove dust and dirt completely before restarting systems.

D. HVAC equipment and ductwork may NOT be used for ventilation during construction:

1. Provide temporary ventilation equivalent to 1.5 air changes per hour, minimum.

2. Exhaust directly to outside.

3. Seal HVAC air inlets and outlets immediately after duct installation.

E. Do not store construction materials or waste in mechanical or electrical rooms.

F. Prior to use of return air ductwork without intake filters clean up and remove dust and debris generated by construction activities.

1. Inspect duct intakes, return air grilles, and terminal units for dust.

2. Clean plenum spaces, including top sides of lay-in ceilings, outsides of ducts, tops of pipes and conduit.

3. Clean tops of doors and frames.

4. Clean mechanical and electrical rooms, including tops of pipes, ducts, and conduit, equipment, and supports.

5. Clean return plenums of air handling units.

6. Remove intake filters last, after cleaning is complete.

G. Do not perform dusty or dirty work after starting use of return air ducts without intake filters.

H. Use other relevant recommendations of SMACNA (OCC) for avoiding unnecessary contamination due to construction procedures.

3.02 BUILDING FLUSH-OUT

A. Contractor's Option: Either full continuous flush-out OR satisfactory air contaminant testing is required, not both.

B. Perform building flush-out before occupancy.

C. Do not start flush-out until:

1. All construction is complete.

2. HVAC systems have been tested, adjusted, and balanced for proper operation.

3. Inspection of inside of return air ducts and terminal units confirms that cleaning is not necessary.

4. New HVAC filtration media have been installed.

D. Building Flush-Out: Operate all ventilation systems at normal flow rates with 100 percent outside air until a total air volume of 14,000 cubic feet per square foot of floor area has been supplied.

1. Obtain Owner's concurrence that construction is complete enough before beginning flush-out.

2. Maintain interior temperature of at least 60 degrees F and interior relative humidity no higher than 60 percent.

3. If additional construction involving materials that produce particulates or any of the specified contaminants is conducted during flush-out, start flush-out over.

4. If interior spaces must be occupied prior to completion of the flush-out, supply a minimum of 25 percent of the total air volume prior to occupancy, and:

a. Begin ventilation at least three hours prior to daily occupancy.

b. Continue ventilation during all occupied periods.

c. Provide minimum outside air volume of 0.30 cfm per square foot or design minimum outside air rate, whichever is greater.

E. Install new HVAC filtration media after completion of flush-out and before occupancy or further testing.

3.03 AIR CONTAMINANT TESTING

A. Contractor's Option: Either full continuous flush-out OR satisfactory air contaminant testing is required, not both.

B. Perform air contaminant testing before occupancy.

C. Do not start air contaminant testing until:

1. All construction is complete, including interior finishes.

2. HVAC systems have been tested, adjusted, and balanced for proper operation.

3. New HVAC filtration media have been installed.

D. Indoor Air Samples: Collect from spaces representative of occupied areas:

1. Collect samples while operable windows and exterior doors are closed, HVAC system is running normally as if occupied, with design minimum outdoor air, but with the building unoccupied.

2. Collect samples from spaces in each contiguous floor area in each air handler zone, but not less than one sample per 25,000 square feet; take samples from areas having the least ventilation and those having the greatest presumed source strength.

3. Collect samples from height from 36 inches to 72 inches above floor.

4. Collect samples from same locations on 3 consecutive days during normal business hours; average the results of each set of 3 samples.

5. Exception: Areas with normal very high outside air ventilation rates, such as laboratories, do not need to be tested.

6. When retesting the same building areas, take samples from at least the same locations as in first test.

E. Outdoor Air Samples: Collect samples at outside air intake of each air handler at the same time as indoor samples are taken.

F. Analyze air samples and submit report.

G. Air Contaminant Concentration Limits:

1. Formaldehyde: Not more than 27 parts per billion.

2. PM10 Particulates: Not more than 50 micrograms per cubic meter.

3. Total Volatile Organic Compounds (TVOCs): Not more than 500 micrograms per cubic meter.

4. Chemicals Listed in CAL (CDPH SM) Table 4-1, except Formaldehyde: Allowable concentrations listed in Table 4-1.

5. Carbon Monoxide: Not more than 9 parts per million and not more than 2 parts per million higher than outdoor air.

H. Air Contaminant Concentration Test Methods:

1. Formaldehyde: ASTM D5197, EPA 625 Method TO-11A, or EPA 600 Method IP-6.

2. Particulates: EPA 600 Method IP-10.

3. Total Volatile Organic Compounds (TVOC): EPA 625 Method TO-1, TO-15, or TO-17; or EPA 600 Method IP-1.

4. Chemicals Listed in CAL (CDPH SM) Table 4-1, except Formaldehyde: ASTM D5197, or EPA 625 Method TO-1, TO-15, or TO-17.

5. Carbon Monoxide: EPA 600 Method IP-3, plus measure outdoor air; measure in ppm; report both indoor and outdoor measurements.

I. Air Contaminant Concentration Determination and Limits:

1. Carbon Monoxide: Not more than 9 parts per million and not more than 2 parts per million higher than outdoor air.

2. Airborne Mold and Mildew: Measure in relation to outside air; not higher than outside air.

3. Formaldehyde: Not more than 50 parts per billion.

4. Formaldehyde: Measure in micrograms per cubic meter, in relation to outside air; not more than 20 micrograms per cubic meter higher than outside air.

5. Total Volatile Organic Compounds (TVOC): Not more than 500 micrograms per cubic meter.

6. Total Volatile Organic Compounds (TVOC): Measure in micrograms per cubic meter, in relation to outside air; not more than 200 micrograms per cubic meter higher than outside air.

7. Particulates (PM10): Not more than 50 micrograms per cubic meter.

8. Total Particulates (PM): Measure in micrograms per cubic meter, in relation to outside air; not more than 20 micrograms per cubic meter higher than outside air.

END OF SECTION

PART 1 GENERAL

1.01 SECTION INCLUDES

A. General product requirements.

B. Re-use of existing products.

C. Transportation, handling, storage and protection.

D. Product option requirements.

E. Substitution limitations and procedures.

F. Procedures for Owner-supplied products.

G. Maintenance materials, including extra materials, spare parts, tools, and software.

1.02 RELATED REQUIREMENTS

A. Document 00 2113 - Instructions to Bidders: Product options and substitution procedures prior to bid date.

B. Section 01 4000 - Quality Requirements: Product quality monitoring.

C. Section 01 6023 - Substitution Request Form

D. Section 01 6116 - Volatile Organic Compound (VOC) Content Restrictions: Requirements for VOC-restricted product categories.

E. Section 01 7419 - Construction Waste Management and Disposal: Waste disposal requirements potentially affecting packaging and substitutions.

1.03 REFERENCE STANDARDS

A. GEI (SCH) - GREENGUARD "Children and Schools" Certified Products; GREENGUARD Environmental Institute; current listings at www.greenguard.org.

B. GreenSeal GS-36 - Commercial Adhesives; Green Seal, Inc.; 2000.

C. SCAQMD 1168 - South Coast Air Quality Management District Rule No.1168; current edition; www.aqmd.gov

1.04 SUBMITTALS

A. Proposed Products List: Submit list of major products that comply with the specifications and are proposed for use, with name of manufacturer, trade name, and model number of each product.

1. Submit within 15 days after date of Subcontract Award Notice.

2. For products specified only by reference standards, list applicable reference standards.

B. Product Data Submittals: Submit manufacturer's standard published data. Mark each copy to identify applicable products, models, options, and other data. Supplement manufacturers' standard data to provide information specific to this Project.

C. Shop Drawing Submittals: Prepared specifically for this Project; indicate utility and electrical characteristics, utility connection requirements, and location of utility outlets for service for functional equipment and appliances.

D. Sample Submittals: Illustrate functional and aesthetic characteristics of the product, with integral parts and attachment devices. Coordinate sample submittals for interfacing work.

1. For selection from standard finishes, submit samples of the full range of the manufacturer's standard colors, textures, and patterns.

PART 2 PRODUCTS

2.01 EXISTING PRODUCTS

A. Do not use materials and equipment removed from existing premises unless specifically required or permitted by the Contract Documents.

B. Unforeseen historic items encountered remain the property of the Owner; notify Owner promptly upon discovery; protect, remove, handle, and store as directed by Owner.

C. Existing materials and equipment indicated to be removed, but not to be re-used, relocated, reinstalled, delivered to the Owner, or otherwise indicated as to remain the property of the Owner, become the property of the Contractor; remove from site.

D. Reused Products: Reused products include materials and equipment previously used in this or other construction, salvaged and refurbished as specified.

2.02 NEW PRODUCTS

A. Provide new products unless specifically required or permitted by the Contract Documents.

2.03 PRODUCT OPTIONS

A. Products Specified by Reference Standards or by Description Only: Use any product meeting those standards or description.

B. Products Specified by Naming One or More Manufacturers: Use a product of one of the manufacturers named and meeting specifications, no options or substitutions allowed.

C. Products Specified by Naming One or More Manufacturers with a Provision for Substitutions: Submit a request for substitution for any manufacturer not named.

2.04 MAINTENANCE MATERIALS

A. Furnish extra materials, spare parts, tools, and software of types and in quantities specified in individual specification sections.

PART 3 EXECUTION

3.01 SUBSTITUTION PROCEDURES

A. Instructions to Bidders specifies process and time restrictions for submitting requests for substitutions during the bidding period. Comply with requirements specified in that section.

B. Substitutions may be considered when a product becomes unavailable through no fault of the Contractor.

C. Document each request on Form 01-6023 with complete data substantiating compliance of proposed substitution with Contract Documents. **Include a point by point comparative analysis in matrix form.**

D. Substitutions

1. Notify Architect when Contractor is aware of materials, equipment, or products that meet the aesthetic and programmatic intent of Contract Documents, but which are more environmentally responsible than materials, equipment, or products specified or indicated in the Contract Documents.

E. A request for substitution constitutes a representation that the submitter:

1. Has investigated proposed product and determined that it meets or exceeds the quality level of the specified product.

2. Agrees to provide the same warranty for the substitution as for the specified product.

3. Agrees to coordinate installation and make changes to other Work that may be required for the Work to be complete with no additional cost to Owner.

4. Waives claims for additional costs or time extension that may subsequently become apparent.

F. Substitutions will not be allowed post bid.

G. Each request for substitution approval shall include:

1. Identity of Product for which substitution is requested; include Specification Section.

2. Identity of substitution; include complete Product description, drawings, photographs, performance and test data, and any other information necessary for evaluation.

3. ~~Identify compliance with any described LEED product requirements~~.

4. Quality comparison of proposed substitution with specified product.

5. Changes in other Work required because of substitution.

6. Effect on construction progress schedule.

7. Cost of proposed substitution compared with specified product.

8. Any required license fees or royalties.

9. Availability of maintenance service.

10. Source of replacement materials.

H. Architect will be sole judge of acceptability of any proposed substitution.

3.02 SUBSTITUTIONS AFTER CONTRACT AWARD

A. Approval will be granted only when:

1. Specified Product cannot be delivered without Project delay, or

2. Specified Product has been discontinued, or

3. Specified Product has been replaced by superior Product, or

4. Specified Product cannot be guaranteed as specified, or

5. Specified Product will not perform properly, or

6. Specified Product will not fit within designated space, or

7. Specified Product does not comply with governing codes, or

8. Substitution will be clearly in Owner's interest.

B. Architect will issue Change Order authorizing approved substitutions and revising Contract Sum where appropriate.

3.03 CONTRACT COMPLIANCE

A. Substitution approval does not relieve Contractor from responsibility for proper execution of the Work and for compliance with other Contract requirements.

3.04 OWNER-SUPPLIED PRODUCTS

A. See Section 01 1000 for identification of Owner-supplied products.

B. Owner's Responsibilities:

1. Arrange for and deliver Owner reviewed shop drawings, product data, and samples, to Contractor.

2. Arrange and pay for product delivery to site.

3. On delivery, inspect products jointly with Contractor.

4. Submit claims for transportation damage and replace damaged, defective, or deficient items.

5. Arrange for manufacturers' warranties, inspections, and service.

C. Contractor's Responsibilities:

1. Review Owner reviewed shop drawings, product data, and samples.

2. Receive and unload products at site; inspect for completeness or damage jointly with Owner.

3. Handle, store, install and finish products.

4. Repair or replace items damaged after receipt.

3.05 TRANSPORTATION AND HANDLING

A. Package products for shipment in manner to prevent damage; for equipment, package to avoid loss of factory calibration.

B. If special precautions are required, attach instructions prominently and legibly on outside of packaging.

C. Coordinate schedule of product delivery to designated prepared areas in order to minimize site storage time and potential damage to stored materials.

D. Transport and handle products in accordance with manufacturer's instructions.

E. Transport materials in covered trucks to prevent contamination of product and littering of surrounding areas.

F. Promptly inspect shipments to ensure that products comply with requirements, quantities are correct, and products are undamaged.

G. Provide equipment and personnel to handle products by methods to prevent soiling, disfigurement, or damage, and to minimize handling.

H. Arrange for the return of packing materials, such as wood pallets, where economically feasible.

3.06 STORAGE AND PROTECTION

A. Designate receiving/storage areas for incoming products so that they are delivered according to installation schedule and placed convenient to work area in order to minimize waste due to excessive materials handling and misapplication.

B. Store and protect products in accordance with manufacturers' instructions.

C. Store with seals and labels intact and legible.

D. Store sensitive products in weather tight, climate controlled, enclosures in an environment favorable to product.

E. For exterior storage of fabricated products, place on sloped supports above ground.

F. Protect products from damage or deterioration due to construction operations, weather, precipitation, humidity, temperature, sunlight and ultraviolet light, dirt, dust, and other contaminants.

G. Comply with manufacturer's warranty conditions, if any.

H. Cover products subject to deterioration with impervious sheet covering. Provide ventilation to prevent condensation and degradation of products.

I. Prevent contact with material that may cause corrosion, discoloration, or staining.

J. Provide equipment and personnel to store products by methods to prevent soiling, disfigurement, or damage.

K. Arrange storage of products to permit access for inspection. Periodically inspect to verify products are undamaged and are maintained in acceptable condition.

END OF SECTION

SUBSTITUTION REQUEST: DATE SUBMITTED _____

1.01 SUBMIT TO: Ken Gruenwald, Sr. Project Manager

1.02 PROJECT: Sunrise 2021 Mechanical UpgradeProject

1.03 SPECIFIED ITEM:

A. SECTION NAME AND NUMBER: _____

B. PRODUCT TYPE AND NAME AND MODEL: _____

C. PARAGRAPH AND PRODUCT DESCRIPTION: _____

1.04 PROPOSED SUBSTITUTION:

A. MANUFACTURER AND MODEL NUMBER(S): _____

B. PRODUCT DESCRIPTION: _____

C. Attached data includes product description, specifications, drawings, photographs, performance, test data and **point by point comparative matrix** adequate for evaluation of request including identification of applicable data portions. Attached data also includes description of changes to Contract Documents the proposed substitution requires for proper installation.

D. It is the responsibility of the requestee to assemble a comparative matrix outlining key elements of proposed substitution.

1.05 UNDERSIGNED CERTIFIES FOLLOWING ITEMS, UNLESS MODIFIED BY ATTACHMENTS, ARE CORRECT:

A. Proposed substitution does not affect dimensions shown on the drawings.

B. Undersigned pays for changes to building design, including engineering design, detailing, and construction costs caused by proposed substitution.

C. Proposed substitution has no adverse effect on other trades, construction schedule, or specified warranty requirements.

D. Maintenance and service parts are available locally or readily obtainable for proposed substitution.

1.06 UNDERSIGNED FURTHER CERTIFIES FUNCTION, APPEARANCE, AND QUALITY OF PROPOSED SUBSTITUTION ARE EQUIVALENT OR SUPERIOR TO SPECIFIED ITEM.

1.07 UNDERSIGNED FURTHER CERTIFIES THAT THE MANUFACTURER OF THE PROPOSED SUBSTITUTION IS AWARE OF THIS SUBSTITUTION REQUEST AND AGREES TO THE STATEMENTS NOTED ABOVE.

1.08 UNDERSIGNED AGREES THAT THE TERMS AND CONDITIONS FOR SUBSTITUTIONS FOUND IN BIDDING DOCUMENTS APPLY TO THIS PROPOSED SUBSTITUTION.

1.09 SUBMITTED BY:

A. PRINT NAME: _____

SIGNATURE:_____

B. FIRM NAME: _____

C. FULL MAILING ADDRESS: _____

City: _____ State: _____ Zip:_____

D. PHONE: _____ E-MAIL: _____

1.10 FOR USE BY ARCHITECT OR ENGINEER

A. APPROVED OR APPROVED AS NOTED BY: _____

B. NOT APPROVED BY: _____

C. RECEIVED TOO LATE: _____

D. REMARKS: _____

E. DATE OF RESPONSE: _____

END OF SECTION

PART 1 GENERAL

1.01 SECTION INCLUDES

A. Requirement for installer certification that they did not use any non-compliant products.

B. VOC restrictions for product categories listed below under "DEFINITIONS."

C. All products of each category that are installed in the project must comply; Owner's project goals do not allow for partial compliance.

1.02 RELATED REQUIREMENTS

A. Section 01 3000 - Administrative Requirements: Submittal procedures.

C. Section 01 4000 - Quality Requirements: Procedures for testing and certifications.

D. Section 01 5721 - Indoor Air Quality Controls: Procedures and testing.

E. Section 01 6000 - Product Requirements: Fundamental product requirements, substitutions and product options, delivery, storage, and handling.

1.03 DEFINITIONS

A. VOC-Restricted Products: All products of each of the following categories when installed or applied on-site in the building interior:

1. Adhesives, sealants, and sealer coatings.
2. Carpet.
3. Carpet tile.
4. Resilient floor coverings.
5. Paints and coatings.
6. Insulation.
7. Gypsum board.
8. Acoustical ceilings and panels.
9. Cabinet work.
10. Wall coverings.
11. Composite wood and agrifiber products used either alone or as part of another product.
12. Other products when specifically stated in the specifications.

B. Interior of Building: Anywhere inside the exterior weather barrier.

C. Adhesives: All gunnable, trowelable, liquid-applied, and aerosol adhesives, whether specified or not; including flooring adhesives, resilient base adhesives, and pipe jointing adhesives.

D. Sealants: All gunnable, trowelable, and liquid-applied joint sealants and sealant primers, whether specified or not; including firestopping sealants and duct joint sealers.

1.04 REFERENCE STANDARDS

A. CRI (GLP) - Green Label Plus Testing Program - Certified Products; Carpet and Rug Institute; Current Edition.

B. GreenSeal GC-03 - Anti-Corrosive Paints; Green Seal, Inc.; 2007

C. GreenSeal GS-11 - Paints; Green Seal, Inc.; 1993.

D. GreenSeal GS-36 - Commercial Adhesives; Green Seal, Inc.; 2011.

E. SCAQMD 1113 - South Coast Air Quality Management District Rule No.1113; current edition; http://www.aqmd.gov/

F. SCAQMD 1168 - South Coast Air Quality Management District Rule No.1168; current edition; www.aqmd.gov

G. SCS (CPD) - SCS Certified Products; Scientific Certification Systems; current listings at www.scscertified.com

1.05 SUBMITTALS

A. See Section 01 3000 - Administrative Requirements, for submittal procedures.

B. Evidence of Compliance: Submit for each different product in each applicable category.

C. Product Data: For each VOC-restricted product used in the project, submit evidence of compliance.

D. Installer Certifications Regarding Prohibited Content: Require each installer of any type of product (not just the products for which VOC restrictions are specified) to certify that either 1) no adhesives, joint sealants, paints, coatings, or composite wood or agrifiber products have been used in the installation of his products, or 2) that such products used comply with these requirements.

PART 2 PRODUCTS

2.01 MATERIALS

A. All Products: Comply with the most stringent of federal, State, and local requirements, or these specifications.

B. Adhesives and Joint Sealants: Provide only products having volatile organic compound (VOC) content not greater than required by South Coast Air Quality Management District Rule No.1168.

1. Definition: This provision applies to gunnable, trowelable, and liquid-applied adhesives, sealants, and sealant primers used anywhere on the interior of the building inside the weather barrier, including duct sealers and fire stopping.

2. ~~LEED:~~ Not Used

3. Certification: Require each installer to certify compliance and submit product data showing product content.

    a. Evidence of Compliance: Acceptable types of evidence are:

        1) Report of laboratory testing performed in accordance with requirements.

        2) Published product data showing compliance with requirements.

        3) Certification by manufacturer that product complies with requirements.

        4) SCAQMD limits for specific product categories:

            a) Architectural ApplicationsVOC Limit g/L less water

                1. Indoor Carpet Adhesives 50

                2. Carpet Pad Adhesives 50

                3. Outdoor Carpet Adhesives 150

                4. Wood Flooring Adhesive 100

                5. Rubber Floor Adhesives 60

                6. Subfloor Adhesives 50

                7. Ceramic Tile Adhesives 65

                8. VCT and Asphalt Tile Adhesives 50

                9. Dry Wall and Panel Adhesives 50

                10. Cove Base Adhesives 50

                11. Multipurpose Construction Adhesives 70

                12. Structural Glazing Adhesives 100

                13. Single Ply Roof Membrane Adhesives 250

            b) Specialty Applications VOC Limits g/L less water

                1. PVC Welding 510

                2. CPVC Welding490

                3. ABS Welding 325

4. Plastic Cement Welding250
5. Adhesive Primer for Plastic 550
6. Computer Diskette Manufacturing350
7. Contact Adhesive 80
8. Special Purpose Contact Adhesive250
9. Tire Retread 100
10. Adhesive Primer for Traffic Marking Tape150
11. Structural Wood Member Adhesive140
12. Sheet Applied Rubber Lining Operations850
13. Top and Trim Adhesive250

c) Substrate Specific ApplicationsVOC Limit g/L less water

1. Metal to Metal 30
2. Plastic Foams 50
3. Porous Material (except wood) 50
4. Wood 30
5. Fiberglass 80

d) Sealants VOC Limit g/L less water

1. Architectural 250
2. Marine Deck 760
3. Nonmembrane Roof 300
4. Roadway 250
5. Single-Ply Roof Membrane 450
6. Other 420

e) Sealant Primers VOC Limit g/L less water

1. Architectural Non Porous250
2. Architectural Porous775
3. Modified Bituminous 500
4. Marine Deck 760

5. Other 750

C. Aerosol Adhesives: Provide only products having volatile organic compound (VOC) content not greater than required by GreenSeal GS-36.

1. ~~LEED:~~ Not Used

2. Certification: Require each installer to certify compliance and submit product data showing product content.

a. Evidence of Compliance: Acceptable types of evidence are:

1) Current GreenSeal Certification.

2) Report of laboratory testing performed in accordance with GreenSeal GS-36 requirements.

3) Published product data showing compliance with requirements.

3. GreenSeal limits for specific product categories:

a. Aerosol AdhesivesVOC Weight g/L minus water

1) General purpose mist spray65% VOCs by weight

2) General purpose web spray55% VOCs by weight

3) Special purpose aerosol adhesives (all types)70% VOCs by weight

D. Paints and Coatings:

1. Definition: This provision applies to paints and coatings used anywhere on the interior of the building inside the weather barrier, including all primers and sealers.

2. Provide coatings that comply with the most stringent requirements specified in the following:

a. Architectural Paints and Coatings: Do not exceed VOC content limits established in GreenSeal GS-11.

b. Anti-Corrosive and Anti-Rust Paints: Do not exceed VOC content limits established in GreenSeal GS-03.

c. Clear Wood Finishes, Floor Coatings, Stains, Primers and Shellacs: Do not exceed the VOC content limits established in SCAQMD Rule No. 1113.

3. Determination of VOC Content: Testing and calculation in accordance with 40 CFR 59, Subpart D (EPA Method 24), exclusive of colorants added to a tint base and water added at project site; or other method acceptable to authorities having jurisdiction.

4. This provision is applicable to LEED Credit EQ 4.1; submit LEED Prohibited Content Installer Certification Forms and all support material per section 01 35 16.07.

5. Certification: Require each installer to certify compliance and submit product data showing product content.

   a. Evidence of Compliance: Acceptable types of evidence are:

      1) Report of laboratory testing performed in accordance with requirements.

      2) Published product data showing compliance with requirements.

6. Limits for specific product categories:

   a. Architectural paints, coatings and primers applied to interior walls and ceilings per GreenSeal GS-11

      1) Flats: 50 g/L

      2) Non-Flats: 150 g/L

      3) Primers 50 g/L

   b. Interior Anti-Corrosive and Anti-rust paints, coatings and primers per GreenSeal GS-03, Anti-Corrosive Paints

      1) 250 g/L

   c. All other coatings, paints and sealers per SCAQMD Rule #1113, Architectural Coatings

      1) Coating CategoryVOC Limit g/L

         (a) Bond Breakers 350

         (b) Clear Wood Finishes275

         (c) Varnish275

         (d) Sanding Sealers275

         (e) Lacquer275

         (f) Clear Brushing Lacquer275

         (g) Concrete-Curing Compounds100

         (h) Concrete-Curing Compounds For Roadways and Bridges350

         (i) Dry-Fog Coatings150

         (j) Fire-Proofing Exterior Coatings350

         (k) Fire-Retardant Coatings Clear 650

         (l) Fire-Retardant Coatings Pigmented 350

(m) Flats50

(n) Floor Coatings50

(o) Graphic Arts (Sign) Coatings 500

(p) Industrial Maintenance (IM) Coatings100

(q) High Temperature IM Coatings 420

(r) Zinc-Rich IM Primers100

(s) Japans/Faux Finishing Coatings350

(t) Magnesite Cement Coatings450

(u) Mastic Coatings300

(v) Metallic Pigmented Coatings500

(w) Multi-Color Coatings250

(x) Nonflat Coatings50

(y) Nonflat High Gloss50

(z) Pigmented Lacquer 275

(aa) Pre-Treatment Wash Primers420

(ab) Primers, Sealers, and Undercoaters100

(ac) Quick-Dry Enamels 50

(ad) Quick-Dry Primers, Sealers, and Undercoaters100

(ae) Recycled Coatings250

(af) Roof Coatings50

(ag) Roof Coatings, Aluminum100

(ah) Roof Primers, Bituminous350

(ai) Rust Preventative Coatings100

(aj) Shellac Clear 730

(ak) Shellac Pigmented 550

(al) Specialty Primers100

(am) Stains100

(an) Stains, Interior 250

(ao) Swimming Pool Coatings Repair340

(ap) Swimming Pool Coatings Other340

(aq) Traffic Coatings100

(ar) Waterproofing Sealers100

(as) Waterproofing Concrete/Masonry Sealers100

(at) Wood Preservatives Below-Ground350

(au) Wood Preservatives- Other 350

(av) Low-Solids Coating 120

E. Carpet and Adhesive: Provide products having VOC content not greater than that required for CRI Green Label Plus certification.

1. Evidence of Compliance: Acceptable types of evidence are:

a. Current Green Label Plus Certification.

b. Report of laboratory testing performed in accordance with requirements.

F. Carpet Tile and Adhesive: Provide products having VOC content not greater than that required for CRI Green Label Plus certification.

1. Evidence of Compliance: Acceptable types of evidence are:

a. Current Green Label Plus Certification.

b. Report of laboratory testing performed in accordance with requirements.

G. Composite Wood and Agrifiber Products and Adhesives Used for Laminating Them: Provide products having no added urea-formaldehyde resins.

1. Evidence of Compliance: Acceptable types of evidence are:

a. Current SCS "No Added Urea Formaldehyde" certification; www.scscertified.com.

b. Published product data showing compliance with requirements.

H. Other Product Categories: Comply with limitations specified elsewhere.

PART 3 EXECUTION

3.01 FIELD QUALITY CONTROL

A. Owner reserves the right to reject non-compliant products, whether installed or not, and require their removal and replacement with compliant products at no extra cost to Owner.

B. Additional costs to restore indoor air quality due to installation of non-compliant products will be borne by Contractor.

END OF SECTION

PART 1 GENERAL

1.01 SECTION INCLUDES

A. Examination, preparation, and general installation procedures.

B. Requirements for alterations work, including selective demolition, except removal, disposal, and/or remediation of hazardous materials and toxic substances.

C. Requirements for forming openings in existing construction for all work including mechanical and electrical work.

D. Pre-installation meetings.

E. Cutting and patching.

F. Surveying for laying out the work.

G. Cleaning and protection.

H. Starting of systems and equipment.

I. Demonstration and instruction of Owner personnel.

J. Closeout procedures, including Contractor's Correction Punch List, except payment procedures.

K. General requirements for maintenance service.

L. Substantial completion

M. Final Completion

N. Additional fees for delays in completing work

1.02 RELATED REQUIREMENTS

A. Section 01 1000 - Summary: Limitations on working in existing building; continued occupancy; work sequence; identification of salvaged and relocated materials.

B. Section 01 3000 - Administrative Requirements: Submittals procedures, Electronic document submittal service.

C. Section 01 4000 - Quality Requirements: Testing and inspection procedures.

D. Section 01 5000 - Temporary Facilities and Controls: Temporary exterior enclosures.

E. Section 01 5000 - Temporary Facilities and Controls: Temporary interior partitions.

F. Section 01 5100 - Temporary Utilities: Temporary heating, cooling, and ventilating facilities.

G. Section 01 7419 - Construction Waste Management and Disposal: Additional procedures for trash/waste removal, recycling, salvage, and reuse.

H. Section 01 7800 - Closeout Submittals: Project record documents, operation and maintenance data, warranties and bonds.

1.03 REFERENCE STANDARDS

A. NFPA 241 - Standard for Safeguarding Construction, Alteration, and Demolition Operations; 2013.

1.04 SUBMITTALS

A. See Section 01 3000 - Administrative Requirements, for submittal procedures.

B. Survey work: Submit name, address, and telephone number of Surveyor before starting survey work.

1. On request, submit documentation verifying accuracy of survey work.

2. Submit a copy of site drawing signed by the Land Surveyor, that the elevations and locations of the work are in conformance with Contract Documents.

3. Submit surveys and survey logs for the project record.

C. Cutting and Patching: Submit written request in advance of cutting or alteration that affects:

1. Structural integrity of any element of Project.

2. Integrity of weather exposed or moisture resistant element.

3. Efficiency, maintenance, or safety of any operational element.

4. Visual qualities of sight exposed elements.

5. Work of Owner or separate Contractor.

6. Include in request:

a. Identification of Project.

b. Location and description of affected work.

c. Necessity for cutting or alteration.

d. Description of proposed work and products to be used.

e. Effect on work of Owner or separate Contractor.

f. Written permission of affected separate Contractor.

g. Date and time work will be executed.

D. Project Record Documents: Accurately record actual locations of capped and active utilities.

1.05 QUALIFICATIONS

A. For survey work, employ a land surveyor registered in the State in which the Project is located and acceptable to Architect. Submit evidence of Surveyor's Errors and Omissions insurance coverage in the form of an Insurance Certificate.

1.06 PROJECT CONDITIONS

A. Use of explosives is not permitted.

B. Grade site to drain. Maintain excavations free of water. Provide, operate, and maintain pumping equipment.

C. Protect site from puddling or running water. Provide water barriers as required to protect site from soil erosion.

D. Ventilate enclosed areas to assist cure of materials, to dissipate humidity, and to prevent accumulation of dust, fumes, vapors, or gases.

E. Dust Control: Execute work by methods to minimize raising dust from construction operations. Provide positive means to prevent air-borne dust from dispersing into atmosphere and over adjacent property.

1. Provide dust-proof enclosures to prevent entry of dust generated outdoors.

F. Erosion and Sediment Control: Plan and execute work by methods to control surface drainage from cuts and fills, from borrow and waste disposal areas. Prevent erosion and sedimentation.

1. Minimize amount of bare soil exposed at one time.

2. Provide temporary measures such as berms, dikes, and drains, to prevent water flow.

3. Construct fill and waste areas by selective placement to avoid erosive surface silts or clays.

4. Periodically inspect earthwork to detect evidence of erosion and sedimentation; promptly apply corrective measures.

G. Noise Control: Provide methods, means, and facilities to minimize noise produced by construction operations.

1. At All Times: Excessively noisy tools and operations will not be tolerated inside the building at any time of day; excessively noisy includes jackhammers.

2. Outdoors: Limit conduct of especially noisy exterior work to the hours of 8 am to 5 pm.

3. Indoors: Limit conduct of especially noisy interior work to the hours of 6 pm to 7 am.

H. Pest and Rodent Control: Provide methods, means, and facilities to prevent pests and insects from damaging the work.

I. Pollution Control: Provide methods, means, and facilities to prevent contamination of soil, water, and atmosphere from discharge of noxious, toxic substances, and pollutants produced by construction operations. Comply with federal, state, and local regulations.

1.07 COORDINATION

A. Coordinate work of alterations and renovations to expedite completion sequentially and to accommodate occupancy requirements.

B. Coordinate scheduling, submittals, and work of the various sections of the Project Manual to ensure efficient and orderly sequence of installation of interdependent construction elements, with provisions for accommodating items installed later.

C. Notify affected utility companies and comply with their requirements.

D. Verify that utility requirements and characteristics of new operating equipment are compatible with building utilities. Coordinate work of various sections having interdependent responsibilities for installing, connecting to, and placing in service, such equipment.

E. Coordinate space requirements, supports, and installation of mechanical and electrical work that are indicated diagrammatically on Drawings. Follow routing shown for pipes, ducts, and conduit, as closely as practicable; place runs parallel with lines of building. Utilize spaces efficiently to maximize accessibility for other installations, for maintenance, and for repairs.

F. In finished areas except as otherwise indicated, conceal pipes, ducts, and wiring within the construction. Coordinate locations of fixtures and outlets with finish elements.

G. Coordinate completion and clean-up of work of separate sections.

H. After Owner occupancy of premises, coordinate access to site for correction of defective work and work not in accordance with Contract Documents, to minimize disruption of Owner's activities.

1.08 CONTRACTOR'S FULL TIME SUPERVISION OF THE WORK

A. Contractor shall provide an on-site project superintendent to be present full time whenever work is occurring on site.

B. Contractor's Superintendent shall maintain a Daily Log of work activities at the site during construction.

1. Submit copies of the Daliy Logs to the Owner on a weekly basis.

PART 2 PRODUCTS

2.01 PATCHING MATERIALS

A. New Materials: As specified in product sections; match existing products and work for patching and extending work.

B. Type and Quality of Existing Products: Determine by inspecting and testing products where necessary, referring to existing work as a standard.

C. Product Substitution: For any proposed change in materials, submit request for substitution described in Section 01 6000 - Product Requirements.

PART 3 EXECUTION

3.01 EXAMINATION

A. Verify that existing site conditions and substrate surfaces are acceptable for subsequent work. Start of work means acceptance of existing conditions.

B. Verify that existing substrate is capable of structural support or attachment of new work being applied or attached.

C. Examine and verify specific conditions described in individual specification sections.

D. Take field measurements before confirming product orders or beginning fabrication, to minimize waste due to over-ordering or misfabrication.

E. Verify that utility services are available, of the correct characteristics, and in the correct locations.

F. Prior to Cutting: Examine existing conditions prior to commencing work, including elements subject to damage or movement during cutting and patching. After uncovering existing work, assess conditions affecting performance of work. Beginning of cutting or patching means acceptance of existing conditions.

3.02 PREPARATION

A. Clean substrate surfaces prior to applying next material or substance.

B. Seal cracks or openings of substrate prior to applying next material or substance.

C. Apply manufacturer required or recommended substrate primer, sealer, or conditioner prior to applying any new material or substance in contact or bond.

3.03 PREINSTALLATION MEETINGS

A. When required in individual specification sections, convene a preinstallation meeting at the site prior to commencing work of the section.

B. Require attendance of parties directly affecting, or affected by, work of the specific section.

C. Notify Architect seven days in advance of meeting date.

D. Prepare agenda and preside at meeting:

1. Review conditions of examination, preparation and installation procedures.

2. Review coordination with related work.

E. Record minutes and distribute copies within two days after meeting to participants, with two copies to Architect, Owner, participants, and those affected by decisions made.

3.04 LAYING OUT THE WORK

A. Verify locations of survey control points prior to starting work.

B. Promptly notify Architect of any discrepancies discovered.

C. Protect survey control points prior to starting site work; preserve permanent reference points during construction.

D. Promptly report to Architect the loss or destruction of any reference point or relocation required because of changes in grades or other reasons.

E. Replace dislocated survey control points based on original survey control. Make no changes without prior written notice to Architect.

F. Utilize recognized engineering survey practices.

G. Establish elevations, lines and levels. Locate and lay out by instrumentation and similar appropriate means:

1. Site improvements including pavements; stakes for grading, fill and topsoil placement; utility locations, slopes, and invert elevations.

2. Grid or axis for structures.

3. Building foundation, column locations, ground floor elevations.

H. Periodically verify layouts by same means.

I. Maintain a complete and accurate log of control and survey work as it progresses.

3.05 GENERAL INSTALLATION REQUIREMENTS

A. Install products as specified in individual sections, in accordance with manufacturer's instructions and recommendations, and so as to avoid waste due to necessity for replacement.

B. Make vertical elements plumb and horizontal elements level, unless otherwise indicated.

C. Install equipment and fittings plumb and level, neatly aligned with adjacent vertical and horizontal lines, unless otherwise indicated.

D. Make consistent texture on surfaces, with seamless transitions, unless otherwise indicated.

E. Make neat transitions between different surfaces, maintaining texture and appearance.

3.06 ALTERATIONS

A. The stability and integrity of the existing structure during demolition and selective demolition shall be maintained at levels generally acceptable within the construction industry by the use of temporary bracing, shoring, and underpinning until the proposed structure modifications are completed. In no case shall the existing structure be allowed to become unsafe during construction.

B. The design, installation, and removal of shoring and bracing systems required to provide temporary support of the existing structure during construction shall be the responsibility of the Contractor and shall be designed to support the dead, live, soil, earthquake, and wind loads that may be imposed on the structure during construction in accordance with industry standards and generally accepted engineering principals. Provide the services of a registered professional engineer to design these systems when required by Oregon State Statute and the building code.

C. Drawings showing existing construction and utilities are based on casual field observation and existing record documents only.

1. Verify that construction and utility arrangements are as shown.

2. Report discrepancies to Architect before disturbing existing installation.

3. Beginning of alterations work constitutes acceptance of existing conditions.

D. Keep areas in which alterations are being conducted separated from other areas that are still occupied.

1. Provide, erect, and maintain temporary dustproof partitions of construction specified in Section 01 5000 in locations indicated on drawings.

2. Provide appropriate temporary signage including signage for exit or building egress.

E. Maintain weatherproof exterior building enclosure except for interruptions required for replacement or modifications; take care to prevent water and humidity damage.

1. Where openings in exterior enclosure exist, provide construction to make exterior enclosure weatherproof.

2. Insulate existing ducts or pipes that are exposed to outdoor ambient temperatures by alterations work.

F. Comply with regulatory requirements for Alteration Work:

1. Conform to applicable code for demolition work, dust control, products requiring electrical disconnection and re-connection.

2. Obtain required permits from authorities.

3. Do not close or obstruct egress from any building exit or site exit.

4. Do not disable or disrupt building fire or life safety systems without 3 days' prior written notice to Owner.

5. Conform to applicable regulatory procedures when hazardous or contaminated materials are discovered. Stop all work in the area and notify the Owner's representative.

a. Owner will provide verification, abatement, and removal as required to complete the Work.

G. Remove existing work as indicated and as required to accomplish new work.

1. Remove items indicated on drawings.

2. Relocate items indicated on drawings.

3. Where new surface finishes are to be applied to existing work, perform removals, patch, and prepare existing surfaces as required to receive new finish; remove existing finish if necessary for successful application of new finish.

4. Where new surface finishes are not specified or indicated, patch holes and damaged surfaces to match adjacent finished surfaces as closely as possible

H. Services (Including but not limited to HVAC, Plumbing, Fire Protection, Electrical, and Telecommunications): Remove, relocate, and extend existing systems to accommodate new construction.

1. Notify affected utility companies before starting work and comply with their requirements.

2. Mark location and termination of utilities.

3. Maintain existing active systems that are to remain in operation; maintain access to equipment and operational components; if necessary, modify installation to allow access or provide access panel.

4. Do not interrupt existing utilities serving occupied or used facilities, except when authorized in writing by the Owner. Provide temporary services during interruption of existing utilities, as acceptable to the Owner

5. Where existing systems or equipment are not active and Contract Documents require reactivation, put back into operational condition; repair supply, distribution, and equipment as required.

6. Where existing active systems serve occupied facilities but are to be replaced with new services, maintain existing systems in service until new systems are complete and ready for service.

a. Disable existing systems only to make switchovers and connections; minimize duration of outages.

b. Provide temporary connections as required to maintain existing systems in service.

7. Verify that abandoned services serve only abandoned facilities.

8. Remove abandoned pipe, ducts, conduits, and equipment, including those above accessible ceilings; remove back to source of supply where possible, otherwise cap stub and tag with identification; patch holes left by removal using materials specified for new construction.

I. Protect existing work to remain.

1. Prevent movement of structure; provide shoring and bracing if necessary.

2. Perform cutting to accomplish removals neatly and as specified for cutting new work.

3. Repair adjacent construction and finishes damaged during removal work.

4. Cover finish floors to remain.

5. Use only rubber tired vehicles for conveying materials in building.

J. Adapt existing work to fit new work: Make as neat and smooth transition as possible.

1. When existing finished surfaces are cut so that a smooth transition with new work is not possible, terminate existing surface along a straight line at a natural line of division and make recommendation to Architect.

2. Where removal of partitions or walls results in adjacent spaces becoming one, rework floors, walls, and ceilings to a smooth plane without breaks, steps, or bulkheads.

3. Where a change of plane of 1/4 inch or more occurs in existing work, submit recommendation for providing a smooth transition for Architect review and request instructions.

4. Trim existing wood doors as necessary to clear new floor finish. Refinish trim as required.

K. Patching: Where the existing surface is not indicated to be refinished, patch to match the surface finish that existed prior to cutting. Where the surface is indicated to be refinished, patch so that the substrate is ready for the new finish.

L. Refinish existing surfaces as indicated:

1. Where rooms or spaces are indicated to be refinished, refinish all visible existing surfaces to remain to the specified condition for each material, with a neat transition to adjacent finishes.

2. If mechanical or electrical work is exposed accidentally during the work, re-cover and refinish to match.

M. Clean existing systems and equipment.

N. Remove demolition debris and abandoned items from alterations areas and dispose of off-site; do not burn or bury.

O. Clean remaining structure, equipment and facilities of all dirt, dust, and debris caused by demolition work. Return areas to conditions existing prior to the start of the work.

P. Do not begin new construction in alterations areas before demolition is complete.

Q. Comply with all other applicable requirements of this section.

3.07 CUTTING AND PATCHING

A. Whenever possible, execute the work by methods that avoid cutting or patching.

B. See Alterations article above for additional requirements.

C. Perform whatever cutting and patching is necessary to:

1. Complete the work.

2. Fit products together to integrate with other work.

3. Provide openings for penetration of mechanical, electrical, and other services.

4. Match work that has been cut to adjacent work.

5. Repair areas adjacent to cuts to required condition.

6. Repair new work damaged by subsequent work.

7. Remove samples of installed work for testing when requested.

8. Remove and replace defective and non-conforming work.

D. Execute work by methods that avoid damage to other work and that will provide appropriate surfaces to receive patching and finishing. In existing work, minimize damage and restore to original condition.

E. Employ original installer to perform cutting for weather exposed and moisture resistant elements, and sight exposed surfaces.

F. Cut rigid materials using masonry saw or core drill. Pneumatic tools not allowed without prior approval.

G. Restore work with new products in accordance with requirements of Contract Documents.

H. Fit work air tight to pipes, sleeves, ducts, conduit, and other penetrations through surfaces.

I. At penetrations of fire rated walls, partitions, ceiling, or floor construction, completely seal voids with fire rated material in accordance with Section 07 8400, to full thickness of the penetrated element.

J. Sawcutting:

1. Employ experienced sawcutting contractor to make all holes, or slab and pavement cutting shown in drawings for architectural, structural, mechanical and electrical work.

2. Do not use water saws in occupied areas, unless otherwise approved.

3. Cut openings square and plumb with sharp edges. Minimize overcutting at corners.

4. Verify location of existing utilities in work area and make proper precautions to protect, disconnect and relocate, or terminate services as directed.

K. Patching:

1. Finish patched surfaces to match finish that existed prior to patching. On continuous surfaces, refinish to nearest intersection or natural break. For an assembly, refinish entire unit.

2. Match color, texture, and appearance.

3. Repair patched surfaces that are damaged, lifted, discolored, or showing other imperfections due to patching work. If defects are due to condition of substrate, repair substrate prior to repairing finish.

L. Maintain adequate Temporary Support necessary to assure structural integrity of affected Work.

M. Protect other portions of Project Work against damage and discoloration.

N. Protect Work exposed by cutting against damage and discoloration.

O. Refinish surfaces to match adjacent finish. For continuous surfaces, refinish to nearest intersection or natural break. For an assembly, refinish entire unit.

P. Make neat transitions. Patch work to match adjacent work in texture and appearance. Where new work abuts or aligns with existing, perform a smooth and even transition.

Q. Patch or replace surfaces that are damaged, lifted, discolored, or showing other imperfections due to patching work. Repair substrate prior to patching finish. Finish patches to produce uniform finish and texture over entire area. When finish cannot be matched, refinish entire surface to nearest intersections.

3.08 PROGRESS CLEANING

A. Maintain areas free of waste materials, debris, and rubbish. Maintain site in a clean and orderly condition.

B. Remove debris and rubbish from pipe chases, plenums, attics, crawl spaces, and other closed or remote spaces, prior to enclosing the space.

C. Broom and vacuum clean interior areas prior to start of surface finishing, and continue cleaning to eliminate dust.

D. Collect and remove waste materials, debris, and trash/rubbish from site periodically and dispose off-site; do not burn or bury.

3.09 PROTECTION OF INSTALLED WORK

A. Protect installed work from damage by construction operations.

B. Provide special protection where specified in individual specification sections.

C. Provide temporary and removable protection for installed products. Control activity in immediate work area to prevent damage.

D. Provide protective coverings at walls, projections, jambs, sills, and soffits of openings.

E. Protect finished floors, stairs, and other surfaces from traffic, dirt, wear, damage, or movement of heavy objects, by protecting with durable sheet materials.

F. Prohibit traffic or storage upon waterproofed or roofed surfaces. If traffic or activity is necessary, obtain recommendations for protection from waterproofing or roofing material manufacturer.

G. Prohibit traffic from landscaped areas.

H. Remove protective coverings when no longer needed; reuse or recycle plastic coverings if possible.

3.10 SYSTEM STARTUP

A. Coordinate schedule for start-up of various equipment and systems.

B. Notify Architect and owner seven days prior to start-up of each item.

C. Verify that each piece of equipment or system has been checked for proper lubrication, drive rotation, belt tension, control sequence, and for conditions that may cause damage.

D. Verify tests, meter readings, and specified electrical characteristics agree with those required by the equipment or system manufacturer.

E. Verify that wiring and support components for equipment are complete and tested.

F. Execute start-up under supervision of applicable Contractor personnel and manufacturer's representative in accordance with manufacturers' instructions.

G. When specified in individual specification Sections, require manufacturer to provide authorized representative to be present at site to inspect, check, and approve equipment or system installation prior to start-up, and to supervise placing equipment or system in operation.

H. Submit a written report that equipment or system has been properly installed and is functioning correctly.

3.11 DEMONSTRATION AND INSTRUCTION

A. Demonstrate operation and maintenance of products to Owner's personnel two weeks prior to date of Substantial Completion.

B. Demonstrate start-up, operation, control, adjustment, trouble-shooting, servicing, maintenance, and shutdown of each item of equipment at scheduled time, at equipment location.

C. For equipment or systems requiring seasonal operation, perform demonstration for other season within six months.

D. Provide a qualified person who is knowledgeable about the Project to perform demonstration and instruction of owner personnel.

E. Utilize operation and maintenance manuals as basis for instruction. Review contents of manual with Owner's personnel in detail to explain all aspects of operation and maintenance.

F. Prepare and insert additional data in operations and maintenance manuals when need for additional data becomes apparent during instruction.

G. The amount of time required for instruction on each item of equipment and system is that specified in individual sections.

3.12 ADJUSTING

A. Adjust operating products and equipment to ensure smooth and unhindered operation.

B. Testing, adjusting, and balancing HVAC systems: See Section 23 0593 - Testing, Adjusting, and Balancing for HVAC.

3.13 FINAL CLEANING

A. Use cleaning materials that are nonhazardous.

B. Clean interior and exterior glass, surfaces exposed to view; remove temporary labels, stains and foreign substances, polish transparent and glossy surfaces, vacuum carpeted and soft surfaces.

C. Remove all labels that are not permanent. Do not paint or otherwise cover fire test labels or nameplates on mechanical and electrical equipment.

D. Clean equipment and fixtures to a sanitary condition with cleaning materials appropriate to the surface and material being cleaned.

E. Clean interior floors in accordance with flooring manufacturer instructions.

F. Clean filters of operating equipment.

G. Clean debris from roofs, gutters, downspouts, scuppers, overflow drains, area drains, and drainage systems.

H. Clean site; sweep paved areas, rake clean landscaped surfaces.

I. Remove waste, surplus materials, trash/rubbish, and construction facilities from the site; dispose of in legal manner; do not burn or bury.

3.14 CLOSEOUT PROCEDURES

A. Make submittals that are required by governing or other authorities.

B. Accompany Project Coordinator on preliminary inspection to determine items to be listed for completion or correction in the Contractor's Correction Punch List for Contractor's Notice of Substantial Completion.

C. Notify Architect when work is considered ready for Architect's Substantial Completion inspection.

D. Conduct Substantial Completion inspection and create Final Correction Punch List containing Architect's and Contractor's comprehensive list of items identified to be completed or corrected and submit to Architect.

3.15 SUBSTANTIAL COMPLETION

A. Submit written certification that Contract Documents have been reviewed, work has been inspected, and that work is complete in accordance with Contract Documents and ready for Architect's review.

B. Complete all required maintenance work prior to the date of substantial completion.

C. When Contractor considers Work substantially complete, as defined in General Conditions, submit to the Architect:

1. Written notice that Work, or designated portion thereof, is substantially complete.

2. List of Items to be completed or corrected.

3. Copy of Final or Temporary Occupancy Permit.

D. Architect will, as soon as possible thereafter, make an observation visit to the site to determine completion status.

E. Should Architect determine that Work is not substantially complete:

1. Architect will promptly notify Contractor in writing, giving reasons therefore.

2. Contractor shall remedy Work deficiencies, and send second notice of substantial completion to Architect.

3. Architect will review the corrected work.

F. When Architect concurs that Work is substantially complete, Architect will:

1. Prepare Certificate of Substantial Completion, accompanied by Contractor's list of items to be completed or corrected, as verified and amended by Architect.

2. Submit Certificate to Owner and Contractor for their written acceptance of the responsibilities assigned to them in the Certificate.

G. Correct items of work listed in executed Certificates of Substantial Completion and comply with requirements for access to Owner-occupied areas.

H. Notify Architect when work is considered finally complete.

I. Complete items of work determined by Architect's final inspection.

J. See: ***General Conditions of the Contract for Construction*** for additonal requirements.

3.16 FINAL ACCEPTANCE

A. When Contractor considers Work complete, submit written certification that:

1. Contract Documents have been reviewed.

2. Contractor has inspected Work for compliance with Contract Documents.

3. Work has been completed in accordance with Contract Documents.

4. Equipment and Systems have been tested in presence of Owner's Representative and are operational.

5. Work is complete and ready for final inspection.

B. Architect will, as soon as possible thereafter, make an observation visit to the site to determine completion status.

C. Should Architect consider Work incomplete or defective:

1. Architect will promptly notify Contractor in writing, listing incomplete or defective Work.

2. Contractor shall immediately remedy deficiencies, and send second written certification to Architect that Work is complete.

3. Architect will review the corrected Work.

D. When Architect finds Work acceptable under Contract Documents, Architect will request Contractor to make closeout submittals.

E. See: ***General Conditions of the Contract for Construction*** for additonal requirements.

3.17 ADDITIONAL FEES FOR DELAYS IN COMPLETING THE WORK

A. Architect will make 2 visits to the project site, one at Substantial Completion and one at Final Completion.

B. Should Architect be required to make more than the stated 2 final site visits due to Contractor's failure to correct specified deficiencies:

1. Owner will compensate Architect for additional services.

2. Owner will deduct Architect's compensation amount from Contractor's final payment as follows:

a. Principal's time at their contracted hourly rate.

b. Employees' time at their contracted hourly rate.

c. Consultant employees and Others at 1.1 times the direct cost incurred.

d. Charges will be made for necessary travel time, commercial air fare, auto expense computed at current allowable IRS mileage rate, room and board, and all other expenses incurred in making inspections.

END OF SECTION

PART 1 GENERAL

1.01 WASTE MANAGEMENT REQUIREMENTS

A. Owner requires that this project generate the least amount of trash and waste possible.

B. Employ processes that ensure the generation of as little waste as possible due to error, poor planning, breakage, mishandling, contamination, or other factors.

C. Minimize trash/waste disposal in landfills; reuse, salvage, or recycle as much waste as economically feasible.

D. Required Recycling, Salvage, and Reuse: The following may not be disposed of in landfills or by incineration:

1. Aluminum and plastic beverage containers.

2. Corrugated cardboard.

3. Wood pallets.

4. Clean dimensional wood: May be used as blocking or furring.

5. Land clearing debris, including brush, branches, logs, and stumps; see Section 31 1000 - Site Clearing for use options.

6. Metals, including packaging banding, metal studs, sheet metal, structural steel, piping, reinforcing bars, door frames, and other items made of steel, iron, galvanized steel, stainless steel, aluminum, copper, zinc, lead, brass, and bronze.

7. Fluorescent lamps (light bulbs).

E. Contractor shall submit periodic Waste Disposal Reports; all landfill disposal, recycling, salvage, and reuse must be reported regardless of to whom the cost or savings accrues; use the same units of measure on all reports.

F. Contractor shall develop and follow a Waste Management Plan designed to implement these requirements.

G. Methods of trash/waste disposal that are not acceptable are:

1. Burning on the project site.

2. Burying on the project site.

3. Dumping or burying on other property, public or private.

4. Other illegal dumping or burying.

5. Incineration, either on- or off-site.

6. Use of Owner's trash receptacles.

H. Regulatory Requirements: Contractor is responsible for knowing and complying with regulatory requirements, including but not limited to Federal, state and local

requirements, pertaining to legal disposal of all construction and demolition waste materials.

1.02 RELATED REQUIREMENTS

A. Section 01 3000 - Administrative Requirements: Additional requirements for project meetings, reports, submittal procedures, and project documentation.

B. Section 01 5000 - Temporary Facilities and Controls: Additional requirements related to trash/waste collection and removal facilities and services.

C. Section 01 6000 - Product Requirements: Waste prevention requirements related to delivery, storage, and handling.

D. Section 01 7000 - Execution and Closeout Requirements: Trash/waste prevention procedures related to demolition, cutting and patching, installation, protection, and cleaning.

1.03 DEFINITIONS

A. Clean: Untreated and unpainted; not contaminated with oils, solvents, caulk, or the like.

B. Construction and Demolition Waste: Solid wastes typically including building materials, packaging, trash, debris, and rubble resulting from construction, remodeling, repair and demolition operations.

C. Hazardous: Exhibiting the characteristics of hazardous substances, i.e., ignitibility, corrosivity, toxicity or reactivity.

D. Nonhazardous: Exhibiting none of the characteristics of hazardous substances, i.e., ignitibility, corrosivity, toxicity, or reactivity.

E. Nontoxic: Neither immediately poisonous to humans nor poisonous after a long period of exposure.

F. Recyclable: The ability of a product or material to be recovered at the end of its life cycle and remanufactured into a new product for reuse by others.

G. Recycle: To remove a waste material from the project site to another site for remanufacture into a new product for reuse by others.

H. Recycling: The process of sorting, cleansing, treating and reconstituting solid waste and other discarded materials for the purpose of using the altered form. Recycling does not include burning, incinerating, or thermally destroying waste.

I. Return: To give back reusable items or unused products to vendors for credit.

J. Reuse: To reuse a construction waste material in some manner on the project site.

K. Salvage: To remove a waste material from the project site to another site for resale or reuse by others.

L. Sediment: Soil and other debris that has been eroded and transported by storm or well production run-off water.

M. Source Separation: The act of keeping different types of waste materials separate beginning from the first time they become waste.

N. Toxic: Poisonous to humans either immediately or after a long period of exposure.

O. Trash: Any product or material unable to be reused, returned, recycled, or salvaged.

P. Waste: Extra material or material that has reached the end of its useful life in its intended use. Waste includes salvageable, returnable, recyclable, and reusable material.

1.04 SUBMITTALS

A. See Section 01 3000 - Administrative Requirements, for submittal procedures.

B. Submit Waste Management Plan within 10 calendar days after receipt of Notice of Award of Bid, or prior to any trash or waste removal, whichever occurs sooner; submit projection of all trash and waste that will require disposal and alternatives to landfilling.

C. Waste Management Plan: Include the following information:

1. Analysis of the trash and waste projected to be generated during the entire project construction cycle, including types and quantities.

2. Landfill Options: The name, address, and telephone number of the landfill(s) where trash/waste will be disposed of, the applicable landfill tipping fee(s), and the projected cost of disposing of all project trash/waste in the landfill(s).

3. Landfill Alternatives: List all waste materials that will be diverted from landfills by reuse, salvage, or recycling.

D. Waste Disposal Reports: Submit at specified intervals, with details of quantities of trash and waste, means of disposal or reuse, and costs; show both totals to date and since last report.

1. Submit updated Report with each Application for Progress Payment; failure to submit Report will delay payment.

2. Submit Report on a form acceptable to Owner.

3. Landfill Disposal: Include the following information:

a. Identification of material.

b. Amount, in tons or cubic yards, of trash/waste material from the project disposed of in landfills.

c. State the identity of landfills, total amount of tipping fees paid to landfill, and total disposal cost.

d. Include manifests, weight tickets, receipts, and invoices as evidence of quantity and cost.

4. Recycled and Salvaged Materials: Include the following information for each:

a. Identification of material, including those retrieved by installer for use on other projects.

b. Amount, in tons or cubic yards, date removed from the project site, and receiving party.

c. Transportation cost, amount paid or received for the material, and the net total cost or savings of salvage or recycling each material.

d. Include manifests, weight tickets, receipts, and invoices as evidence of quantity and cost.

e. Certification by receiving party that materials will not be disposed of in landfills or by incineration.

5. Material Reused on Project: Include the following information for each:

a. Identification of material and how it was used in the project.

b. Amount, in tons or cubic yards.

c. Include weight tickets as evidence of quantity.

6. Other Disposal Methods: Include information similar to that described above, as appropriate to disposal method.

PART 2 PRODUCTS - NOT USED

PART 3 EXECUTION

3.01 WASTE MANAGEMENT PLAN IMPLEMENTATION

A. Manager: Designate an on-site person or persons responsible for instructing workers and overseeing and documenting results of the Waste Management Plan.

B. Spill Response Planning - Establish spill prevention and cleanup procedures. Identify all potential spill areas and develop procedures for avoiding and responding to spills should they occur.

C. Communication: Distribute copies of the Waste Management Plan to job site foreman, each subcontractor, Owner, and Architect.

D. Instruction: Provide on-site instruction of appropriate separation, handling, and recycling, salvage, reuse, and return methods to be used by all parties at the appropriate stages of the project.

E. Meetings: Discuss trash/waste management goals and issues at project meetings.

1. Pre-bid meeting.

2. Pre-construction meeting.

3. Regular job-site meetings.

F. Facilities: Provide specific facilities for separation and storage of materials for recycling, salvage, reuse, return, and trash disposal, for use by all contractors and installers.

1. Provide containers as required.

2. Provide adequate space for pick-up and delivery and convenience to subcontractors.

3. If an enclosed area is not provided, clearly lay out and label a specific area on-site.

4. Keep recycling and trash/waste bin areas neat and clean and clearly marked in order to avoid contamination of materials.

G. Hazardous Wastes: Separate, store, and dispose of hazardous wastes according to applicable regulations.

H. Recycling: Separate, store, protect, and handle at the site identified recyclable waste products in order to prevent contamination of materials and to maximize recyclability of identified materials. Arrange for timely pickups from the site or deliveries to recycling facility in order to prevent contamination of recyclable materials.

I. Reuse of Materials On-Site: Set aside, sort, and protect separated products in preparation for reuse.

J. Salvage: Set aside, sort, and protect products to be salvaged for reuse off-site.

END OF SECTION

PART 1 GENERAL

1.01 SECTION INCLUDES

A. Project Record Documents.

B. Operation and Maintenance Data.

C. Warranties and bonds.

1.02 RELATED REQUIREMENTS

A. ***Section 00 6000 General Conditions of Construction Contract*** for additonal requirements.

B. Section 01 3000 - Administrative Requirements: Submittals procedures, shop drawings, product data, and samples.

C. Section 01 7000 - Execution and Closeout Requirements: Contract closeout procedures.

D. Individual Product Sections: Specific requirements for operation and maintenance data.

E. Individual Product Sections: Warranties required for specific products or Work.

1.03 SUBMITTALS

A. Substantial Completion will not commence before the Operations and Maintenance Manuals, Warranties, and the Record Drawings are submitted in accordance with Section 01 7000.

B. Project Record Documents: Submit documents to Consultant Prior to Substantial Completion.

C. Operation and Maintenance Data:

1. Submit one paper copy of preliminary draft or proposed formats and outlines of contents before start of Work. Consultant will review draft and return the one copy with comments.

2. For equipment, or component parts of equipment put into service during construction and operated by Owner, submit completed documents within ten days after acceptance.

3. Submit one copy of completed documents 30 days prior to scheduled date of substantial completion.. This copy will be reviewed and returned, with Consultant comments. Revise content of all document sets as required prior to final submission.

4. Submit three digital copy in PDF file format on CD or DVD discs, and three paper sets of revised final documents in final form prior to date of Substantial Completion.

5. Either the draft copy or the final copy of the O&M manuals must be on the project site during any of the operator training scheduled for the project.

D. Warranties and Bonds:

1. For equipment or component parts of equipment put into service during construction with Owner's permission, submit documents within 10 days after acceptance.

2. Make other submittals within 10 days after Date of Substantial Completion, prior to final Application for Payment.

3. For items of Work for which acceptance is delayed beyond Date of Substantial Completion, submit within 10 days after acceptance, listing the date of acceptance as the beginning of the warranty period.

4. Submit three digital copies in PDF file format on CD or DVD discs, and [three] paper sets of final documents prior to date of Substantial Completion.

PART 2 PRODUCTS - NOT USED

PART 3 EXECUTION

3.01 PROJECT RECORD DOCUMENTS

A. Maintain on site one set of the following record documents; record actual revisions to the Work:

1. Drawings.

2. Specifications.

3. Addenda.

4. Change Orders and other modifications to the Contract.

B. Maintenance of documents and samples.

1. Store in Contractor's Field Office apart from Documents used for Construction.

2. Provide Files, Shelving and Cabinets necessary to safely and securely store Documents and Samples.

3. Maintain Documents in a clean, dry, legible, and good order.

4. Do not use Record Documents for Construction Purposes.

5. Make Documents available at all time for Consultant's inspection

C. Ensure entries are complete and accurate, enabling future reference by Owner.

D. Store record documents separate from documents used for construction.

E. Record information concurrent with construction progress.

F. Specifications: Legibly mark and record at each product section description of actual products installed, including the following:

1. Manufacturer's name and product model and number.

2. Product substitutions or alternates utilized.

3. Changes made by Addenda and modifications.

G. Record Drawings: Legibly mark each item to record actual construction including:

1. Measured depths of foundations in relation to finish first floor datum.

2. Measured horizontal and vertical locations of underground utilities and appurtenances, referenced to permanent surface improvements.

3. Measured locations of internal utilities and appurtenances concealed in construction, referenced to visible and accessible features of the Work.

4. Field changes of dimension and detail.

5. Details not on original Contract drawings.

3.02 OPERATION AND MAINTENANCE DATA

A. Source Data: For each product or system, list names, addresses and telephone numbers of Subcontractors and suppliers, including local source of supplies and replacement parts.

B. Product Data: Mark each sheet to clearly identify specific products and component parts, and data applicable to installation. Delete inapplicable information.

C. Drawings: Supplement product data to illustrate relations of component parts of equipment and systems, to show control and flow diagrams. Do not use Project Record Documents as maintenance drawings.

D. Typed Text: As required to supplement product data. Provide logical sequence of instructions for each procedure, incorporating manufacturer's instructions.

3.03 OPERATION AND MAINTENANCE DATA FOR MATERIALS AND FINISHES

A. For Each Product, Applied Material, and Finish:

1. Product data, with catalog number, size, composition, and color and texture designations.

2. Information for re-ordering custom manufactured products.

B. Instructions for Care and Maintenance: Manufacturer's recommendations for cleaning agents and methods, precautions against detrimental cleaning agents and methods, and recommended schedule for cleaning and maintenance.

C. Moisture protection and weather-exposed products: Include product data listing applicable reference standards, chemical composition, and details of installation. Provide recommendations for inspections, maintenance, and repair.

D. Additional information as specified in individual product specification sections.

E. Where additional instructions are required, beyond the manufacturer's standard printed instructions, have instructions prepared by personnel experienced in the operation and maintenance of the specific products.

F. Provide a listing in Table of Contents for design data, with tabbed fly sheet and space for insertion of data.

3.04 OPERATION AND MAINTENANCE DATA FOR EQUIPMENT AND SYSTEMS

A. In addition to requirements called for in other sections of this manual, provide the following:

B. For Each Item of Equipment and Each System:

1. Description of unit or system, and component parts.

2. Identify function, normal operating characteristics, and limiting conditions.

3. Include performance curves, with engineering data and tests.

4. Complete nomenclature and model number of replaceable parts.

C. Where additional instructions are required, beyond the manufacturer's standard printed instructions, have instructions prepared by personnel experienced in the operation and maintenance of the specific products.

D. Panelboard Circuit Directories: Provide electrical service characteristics, controls, and communications; typed.

E. Include color coded wiring diagrams as installed.

F. Operating Procedures: Include start-up, break-in, and routine normal operating instructions and sequences. Include regulation, control, stopping, shut-down, and emergency instructions. Include summer, winter, and any special operating instructions.

G. Maintenance Requirements: Include routine procedures and guide for preventative maintenance and trouble shooting; disassembly, repair, and reassembly instructions; and alignment, adjusting, balancing, and checking instructions.

H. Provide servicing and lubrication schedule, and list of lubricants required.

I. Include manufacturer's printed operation and maintenance instructions.

J. Include sequence of operation by controls manufacturer.

K. Provide original manufacturer's parts list, illustrations, assembly drawings, and diagrams required for maintenance.

L. Provide control diagrams by controls manufacturer as installed.

M. Provide Contractor's coordination drawings, with color coded piping diagrams as installed.

N. Provide charts of valve tag numbers, with location and function of each valve, keyed to flow and control diagrams.

O. Provide list of original manufacturer's spare parts, current prices, and recommended quantities to be maintained in storage.

P. Include test and balancing reports.

3.05 ASSEMBLY OF OPERATION AND MAINTENANCE MANUALS

A. Assemble operation and maintenance data into durable manuals for Owner's personnel use, with data arranged in the same sequence as, and identified by, the specification sections.

B. Where systems involve more than one specification section, provide separate tabbed divider for each system.

C. Prepare instructions and data by personnel experienced in maintenance and operation of described products.

D. Prepare data in the form of an instructional manual.

E. Digital O&M Manuals: In addition to binders described below, prepare manuals as PDF documents organized similar to the printed manuals. Copy to one or more properly labeled CD or DVD discs.

1. Searchable PDF files are preferred when possible. Table of Contents and any divider pages in these PDF files must be searchable.

2. Digital copies of O&M Manuals must be organized by section.

F. Paper & 3 Ring Binder O&M Manuals: Binders to be Wilson Jones #344 Series of equivalent, as approved by the Owner. Minimum ring size 1”. When multiple binders are used, correlate data into related consistent groupings. Do not overfill binders.

G. Cover: Identify each binder with typed or printed title OPERATION AND MAINTENANCE INSTRUCTIONS; identify title of Project; identify subject matter of contents.

H. Project Directory: Title and address of Project; names, addresses, and telephone numbers of Consultant, Consultants, Contractor and subcontractors, with names of responsible parties.

I. Tables of Contents: List every item separated by a divider, using the same identification as on the divider tab; where multiple volumes are required, include all volumes Tables of Contents in each volume, with the current volume clearly identified.

J. Dividers: Provide tabbed dividers for each separate product and system; identify the contents on the divider tab; immediately following the divider tab include a description of product and major component parts of equipment.

K. Text: Manufacturer's printed data, or typewritten data on 24 pound paper.

L. Drawings: Provide with reinforced punched binder tab. Bind in with text; fold larger drawings to size of text pages.

M. Arrangement of Contents: Organize each volume in parts as follows:

1. Project Directory.

2. Table of Contents, of all volumes, and of this volume.

3. Operation and Maintenance Data: Arranged by system, then by product category.

a. Source data.

b. Operation and maintenance data.

c. Field quality control data.

d. Original warranties and bonds.

3.06 WARRANTIES AND BONDS

A. Obtain warranties and bonds, executed in duplicate by responsible Subcontractors, suppliers, and manufacturers, within 10 days after completion of the applicable item of work. Except for items put into use with Owner's permission, leave date of beginning of time of warranty until Date of Substantial completion is determined.

B. Verify that documents are in proper form, contain full information, and when required have been are notarized.

C. Co-execute submittals when required.

D. Retain warranties and bonds until time specified for submittal.

E. Manual: Binders to be Wilson Jones #344 Series of equivalent, as approved by the Owner. Minimum ring size 1”. Do not overfill binders.

F. Cover: Identify each binder with typed or printed title WARRANTIES AND BONDS, with title of Project; name, address and telephone number of Contractor and equipment supplier; and name of responsible company principal.

G. Table of Contents: Neatly typed, in the sequence of the Table of Contents of the Project Manual, with each item identified with the number and title of the specification section in which specified, and the name of product or work item.

H. Separate each warranty or bond with index tab sheets keyed to the Table of Contents listing. Provide full information, using separate typed sheets as necessary. List Subcontractor, supplier, and manufacturer, with name, address, and telephone number of responsible principal.

3.07 EVIDENCE OF PAYMENTS & RELEASE OF LIENS

A. Contractor shall submit the following:

1. Contractor's Affidavit of Payment of Debts and Claims, AIA Document G-706 or equivilant form.

2. Contractor's Affidavit of Release of Liens, AIA Document G-706A or equivilant form, including the following:

a. Consent of Contractor's Surety to Final Payment, AIA Document G-707, or equivilant form.

b. Contractor's Release or Waiver of Liens.

c. Separate releases or waivers of lien for Subcontractors, Suppliers, and others with lien rights against Owner's Property, together with list of those parties.

3. Duly sign and execute all Submittals, before delivery to Consultant.

3.08 CONTRACTOR'S CLOSEOUT SUBMITTALS TO CONSULTANT

A. Wage Certification: Section 00 7343 and 01 2000.

B. Building Official's Certificate of Mechanical & Electrical Inspections.

C. Building Official's Certificate of Occupancy.

3.09 SPARE PART & MAINTENANCE MATERIAL SUBMITTALS TO OWNER

A. All spare parts and extra material are to be delivered to the owner prior to the date of substantial completion. Provide written confirmation of delivery, noting quantity and description as well as storage location. Obtain written acceptance from Owner for receipt of stored items.

B. Specific Requirements: See Specifications Sections.

C. Products: Identical to those included in Project Work.

D. Storage Location: Where directed by Owner.

E. Required Submittals: See Specification Sections.

3.10 FINAL ADJUSTMENT OF ACCOUNTS

A. Submit final statement of accounting to Consultant, including the following:

1. Original Contract Sum.

2. Additions and deductions resulting from:

a. Previous Change Orders.

b. Adjustments to Cash Allowances

c. Other adjustments.

d. Deductions for uncompleted Work.

e. Deductions for Reinspection Payments.

3. Total Contract Sum, as adjusted.

4. Previous Payments.

5. Sum remaining due.

B. Consultant will prepare and issue final Change Order, reflecting approved adjustments to Contract Sum not previously made by Change Orders.

3.11 FINAL APPLICATION FOR PAYMENT

A. Follow procedures specified in Section 01 2000.

END OF SECTION

PART 1 GENERAL

1.01 SUMMARY

A. Demonstration of products and systems to be commissioned and where indicated in specific specification sections.

B. Training of Owner personnel in operation and maintenance is required for:

1. All software-operated systems
2. HVAC systems and equipment
3. Plumbing equipment
4. Electrical systems and equipment
5. Conveying systems
6. Landscape irrigation
7. Items specified in individual product Sections

1.02 RELATED REQUIREMENTS

A. Section 01 7800 - Closeout Submittals: Operation and maintenance manuals

B. General Commissioning Requirements: Additional requirements applicable to demonstration and training as determined by Commissioning Agent to Be Determined.

C. Other Specification Sections: Additional requirements for demonstration and training

1.03 SUBMITTALS

A. See Section 01 3000 - Administrative Requirements, for submittal procedures; except:

1. Make all submittals specified in this section, and elsewhere where indicated for commissioning purposes, directly to the Commissioning Authority
2. Submit one copy to the Commissioning Authority, not to be returned
3. Make commissioning submittals on time schedule specified by Commissioning Authority
4. Submittals indicated as "Draft" are intended for the use of the Commissioning Authority in preparation of overall Training Plan; submit in editable electronic format

B. Draft Training Plans: Owner will designate personnel to be trained; tailor training to needs and skill-level of attendees.

1. Submit to Commissioning Authority for review and inclusion in overall training plan.
2. Submit not less than four weeks prior to start of training.
3. Revise and resubmit until acceptable.
4. Provide an overall schedule showing all training sessions.
5. Include at least the following for each training session:

a. Identification, date, time, and duration.

b. Description of products and/or systems to be covered.

c. Name of firm and person conducting training; include qualifications.

d. Intended audience, such as job description.

e. Objectives of training and suggested methods of ensuring adequate training.

f. Methods to be used, such as classroom lecture, live demonstrations, hands-on, etc.

g. Media to be used, such a slides, hand-outs, etc.

h. Training equipment required, such as projector, projection screen, etc., to be provided by Contractor.

C. Training Manuals: Provide training manual for each attendee; allow for minimum of two attendees per training session.

1. Include applicable portion of O&M manuals.

2. Include copies of all hand-outs, slides, overheads, video presentations, etc., that are not included in O&M manuals.

3. Provide one extra copy of each training manual to be included with operation and maintenance data.

D. Training Reports:

1. Identification of each training session, date, time, and duration.

2. Sign-in sheet showing names and job titles of attendees.

3. List of attendee questions and written answers given, including copies of and references to supporting documentation required for clarification; include answers to questions that could not be answered in original training session.

4. Include Commissioning Authority's formal acceptance of training session.

E. Video Recordings: Submit digital video recording of each demonstration and training session for Owner's subsequent use.

1. Format: DVD Disc.

2. Label each disc and container with session identification and date.

1.04 QUALITY ASSURANCE

A. Instructor Qualifications: Familiar with design, operation, maintenance and troubleshooting of the relevant products and systems.

1. Provide as instructors the most qualified trainer of those contractors and/or installers who actually supplied and installed the systems and equipment.

2. Where a single person is not familiar with all aspects, provide specialists with necessary qualifications.

PART 2 PRODUCTS - NOT USED

PART 3 EXECUTION

3.01 DEMONSTRATION - GENERAL

A. Demonstrations conducted during system start-up do not qualify as demonstrations for the purposes of this section, unless approved in advance by Owner.

B. Demonstrations conducted during Functional Testing need not be repeated unless Owner personnel training is specified.

C. Demonstration may be combined with Owner personnel training if applicable.

D. Operating Equipment and Systems: Demonstrate operation in all modes, including start-up, shut-down, seasonal changeover, emergency conditions, and troubleshooting, and maintenance procedures, including scheduled and preventive maintenance.

1. Perform demonstrations not less than two weeks prior to Substantial Completion.

2. For equipment or systems requiring seasonal operation, perform demonstration for other season within six months.

E. Non-Operating Products: Demonstrate cleaning, scheduled and preventive maintenance, and repair procedures.

1. Perform demonstrations not less than two weeks prior to Substantial Completion.

3.02 TRAINING - GENERAL

A. Commissioning Authority will prepare the Training Plan based on draft plans submitted.

B. Conduct training on-site unless otherwise indicated.

C. Owner will provide classroom and seating at no cost to Contractor.

D. Do not start training until Functional Testing is complete, unless otherwise specified or approved by the Commissioning Authority.

E. Provide training in minimum two hour segments.

F. The Commissioning Authority is responsible for determining that the training was satisfactorily completed and will provide approval forms.

G. Training schedule will be subject to availability of Owner's personnel to be trained; re-schedule training sessions as required by Owner; once schedule has been approved by Owner failure to conduct sessions according to schedule will be cause for Owner to charge Contractor for personnel "show-up" time.

H. Review of Facility Policy on Operation and Maintenance Data: During training discuss:

1. The location of the O&M manuals and procedures for use and preservation; backup copies.

2. Typical contents and organization of all manuals, including explanatory information, system narratives, and product specific information.

3. Typical uses of the O&M manuals.

I. Product- and System-Specific Training:

1. Review the applicable O&M manuals.

2. For systems, provide an overview of system operation, design parameters and constraints, and operational strategies.

3. Review instructions for proper operation in all modes, including start-up, shut-down, seasonal changeover and emergency procedures, and for maintenance, including preventative maintenance.

4. Provide hands-on training on all operational modes possible and preventive maintenance.

5. Emphasize safe and proper operating requirements; discuss relevant health and safety issues and emergency procedures.

6. Discuss common troubleshooting problems and solutions.

7. Discuss any peculiarities of equipment installation or operation.

8. Discuss warranties and guarantees, including procedures necessary to avoid voiding coverage.

9. Review recommended tools and spare parts inventory suggestions of manufacturers.

10. Review spare parts and tools required to be furnished by Contractor.

11. Review spare parts suppliers and sources and procurement procedures.

J. Be prepared to answer questions raised by training attendees; if unable to answer during training session, provide written response within three days.

END OF SECTION

SECTION 09 25 00
GYPSUM BOARD

PART 1 GENERAL

1.1 SUMMARY

A. Contract Conditions: Work of this Section is bound by the Contract Conditions and Division 1, bound herewith, in addition to this Specification and accompanying Drawings.

B. Provide gypsum drywall and insulation work for:
1. Ceilings.

C. Related Sections:
1. Painting: Section 09 90 00.

1.2 SUBMITTALS

A. Product Data: Manufacturer's specifications and installation instructions for each product specified.

1.3 QUALITY ASSURANCE

A. Use experienced installers. Deliver, handle and store materials in accordance with manufacturer's instructions.

B. Installers Qualifications:
1. Use only skilled and experienced gypsum board installers for application gypsum board, fastening, taping and finishing.
2. Helpers and apprentices used for such work shall be under full and constant supervision at all times by thoroughly skilled gypsum board installers.
3. In the acceptance or rejection of installed gypsum board, no allowance will be made for lack of skill on the part of installers.

C. Tolerances:
1. Not more than 1/16" difference in true plane at joints between adjacent boards before finishing.
2. After finishing, joints shall be invisible.
3. No gaps or voids between gypsum board units or between drywall and adjacent work, unless detailed otherwise.
4. Not more than 1/8" in 10 feet deviation from true plane, plumb and level in finished work.

D. Where fire resistance rated assemblies are indicated, provide gypsum board, other components, etc. which have been tested and shown in the applicable UL design of the "Fire Resistance Index".

E. Environmental Requirements:
1. Maintain between 55 deg. F. and 75 deg. F. for 24 hours before and during work and for 24 hours after materials have dried.

2. Maintain at least 30 ft. candles of illumination measured 3 feet above floor in work spaces during joint treatment and finishing.
3. Maintain sufficient ventilation for proper joint treatment and finish drying.

PART 2 PRODUCTS

2.1 MATERIALS

A. Gypsum board:
1. Acceptable manufacturers, Domtar Gypsum Company; Georgia Pacific Corp.; Gold Bond Building Products Div.; U.S. Gypsum; or approved.
2. Regular Gypsum Board; Fire resistant, ASTM C 36
3. Fire Rated Gypsum Board: ANSI/ASTM C36 Type X; fire resistive type, UL rated 5/8" thick unless indicated otherwise, ends square cut, tapered and beveled edges.
4. Moisture Resistant Gypsum Board: ANSI/ASTM C630 Type X; fire and moisture resistive type UL rated, 5/8" thick, end square cut, tapered and beveled edges.

B. Screws: ASTM C646, minimum 1 1/4" long.

C. Joint Materials: ANSI/ASTM C475; GA 201 and GA 216; reinforcing tape, joint compound, adhesive, water, and fasteners.

D. Accessories: Galvanized steel corner beads, casing beads, control joints, edge trim etc.

E. Mastic: ASTM D2822, asphalt emulsion.

F. Insulation:
1. Fiberglass batt cut to full center to center joist dimension..

PART 3 EXECUTION

3.1 EXAMINATION

A. General:
1. Verify that structures and surfaces to receive work of this Section are straight, true, plumb, square, rigid, and otherwise properly prepared.
2. Prior to work of this Section notify Contractor of any defects requiring correction.
3. Do not start work until conditions are satisfactory.

B. Location:
1. Fire rated on all fire rated assemblies and at other locations indicated on the drawings.
2. Regular for general use wall and ceiling applications where fire or moisture resistant requirements are not a factor.
3. Moisture resistant board in all locations subject to moisture such as toilet rooms, janitor room, or locations indicted on the drawings.

3.2 GYPSUM BOARD

A. General:
1. Install gypsum board by method specified below, in accordance with applicable referenced standards, and manufacturer's recommendations.

B. To Wood Framing:
1. Single Layer: Secure gypsum board to supports with power driven drywall screws.
2. Double Layer: Secure base layer to supports with power driven drywall screws, face layer to base layer with adhesive and power driven drywall screws. Stagger joints between layers.

3.3 FINISHES

A. General:
1. After trim has been applied, and prior to painting, correct surface damage and defects.
2. Leave work clean, smooth, and without defects which will be apparent after application of finish as scheduled.
3. Level of Finish:
   <u>Level 5</u>
   a. All joints and interior angles shall have tape embedded in joint compound.
   b. Three separate coat of joint compound applied over all joints, angles, fastener heads, and accessories.
   c. All joint compound shall be smooth and free of tool marks and ridges.
   d. A thin skim coat of joint compound, or a material manufactured especially for this purpose, shall be applied to the entire surface
   e. The surface shall be smooth and free of tool marks and ridges.
   f. Prepared surface shall be coated with a primer/sealer prior to the application of final finishes.
   g. Location: Where gloss, semigloss, enamel or nontextured flat paints are specified or where severe lighting conditions occur.

END OF SECTION 09 25 00

SECTION 09 51 00
ACOUSTICAL CEILINGS

PART 1 GENERAL

1.1 SUMMARY

A. Contract Conditions: Work of this Section is bound by the Contract Conditions and Division 1, bound herewith, in addition to this Specification and accompanying Drawings.

B. Provide acoustical ceilings and metal suspension system.

1.2 SUBMITTALS

A. Acoustical Tile Manufacturer's Product Data
1. Standard spec sheet showing material composition, finish, acoustical properties, and light reflectance.

1.3 QUALITY ASSURANCE

A. Use experienced installers. Deliver, handle and store materials in accordance with manufacture's instructions.

B. Manufacturer: Company specializing in manufacture of ceiling tile with three years minimum experience.

C. Installer: Company with three years minimum experience and approved by manufacturer.

D. Environmental Requirements:
1. Delay installation of Acoustic Units until Work spaces are dry.
2. Maintain uniform temperature 55 to 70 deg F, in Work space 24 hours before, during, and after installation.
3. Maintain uniform humidity 65% to 75% in Work space 24 hours before, during and 24 hours after installation.

E. Regulatory Agency Requirements:
1. Fire Resistance Rating: ASTM E-119.
2. Flame Spread Rating: ASTM E-1264.

1.4 REFERENCE SPECIFICATIONS

A. General:
1. Specifications can be obtained from Associations listed below.

B. Acoustical Systems:
1. Type of Acoustic materials, type of mounting, noise reduction coefficients, and methods of installation, hereinafter specified, refer to "Acoustic Ceilings: Use & Practice", published by Association of Wall & Ceiling Contractors; 25 K Street NE; Washington, D.C. 20002

C. Suspension Systems:

1. Suspension systems, hereinafter specified, refer to "Metal Suspension Systems for Acoustical, Tile and Lay-in Panel Ceilings", ASTM C635 and to "Recommended Practice for Installation of Metal Ceiling Suspension Systems for Acoustical Tile and Lay-in Panels", ASTM C-636.

1.5 MAINTENANCE

A. Extra Materials: Deliver extra materials to Owner. Furnish extra materials described below that match products installed. Packaged with protective covering for storage and identified with appropriate labels.

1. Acoustical Ceiling Units: Furnish quantity of full-size units equal to 5.0 percent of amount installed.

PART 2 PRODUCTS

2.1 SUSPENSION SYSTEM

A. Products:
1. Prelude XL manufactured by Armstrong: www.armstrong.com.
2. Seismic Secure 15/16 inch Classic Stab: www.certainteed.com.
2. DX manufactured by USG: www.usg.com.

B. Suspension system for Acoustical Lay-In Panels
1. Exposed tee grid (steel).
2. ASTM C635/C635M.
3. Fire rating to match the ceiling rating indicated.
4. Structural Classification: Intermediate duty, (Heavy Duty).
5. Deflection: 1/360.
6. All components of system from one manufacturer.
7. Hot dipped galvanized steel for all exterior locations, white finish.

C. Components, Exposed Tee Grid
1. Main and Cross Members:
   a. Web design: Double.
   b. Cold-rolled steel, minimum thickness of 0.020 in., electro-zinc coated and factory-painted low sheen satin white.
3. Edge Molding at Wall: Match support framing material and finish.
4. Rough Suspension:
   a. Hanger wire: Minimum 12-gage, galvanized, soft-annealed, mild steel wire.
   b. Wire ties: 18-gage, galvanized annealed steel wire.
   c. Carrying channels: 16-gage, 1 1/2", cold rolled steel.
5. Hold Down Clips:
   a. Type as supplied by suspension system manufacturer.
6. All components part of rated system matching rating indicated for ceiling.

D. Accessories:
1. Trim:
   a. ASTM A-446, Grade C. 24 gauge steel, galvanized ASTM A525, to G90

b. Prefinished baked enamel, color to match acoustic panels.
c. Break metal to trim shapes indicated on Drawings.

2. Fasteners:
   a. Prefinished, self tapping sheet metal screws.
   b. Finish to match acoustic panels where exposed
3. Touch-up Paint: As recommended by manufacturer.

E. Suspension System for Gypsum Board Ceilings: ASTM C645, direct-hung system composed of main beams and cross-furring members that interlock.
   1. Products:
      a. Armstrong World Industries, Inc.; Drywall Grid Systems.
      b. USG Corporation; Drywall Suspension System

2.2 ACOUSTIC UNITS

A. Manufacturers:
   1. National Gypsum, Armstrong, CertainTeed, USG Interiors

B. Acoustical Panels, Non-Rated:
   1. Size: 24" x 48".
   2. Thickness: 3/4”.
   3. Composition: Mineral Fiber.
   4. Light Reflectance: 0.85 min.
   5. CAC: 35 min.
   6. NRC: 0.70 min.
   7. Edge: Square Edges.
   8. Surface Color: White.
   9. Pattern: Armstrong #1714 School Zone Fine Fissured or approved.

2.3 12”x12” CEILING TILES

A. Manufacturers:
   1. Armstrong, USG, CertainTeed; or approved.

B. Acoustical Ceiling Tiles:
   1. Size: 12" x 12"
   2. Thickness: 1/2” or 5/8” (Match existing)
   3. Composition: Mineral Fiber.
   4. Light Reflectance: 0.75 min.
   5. NRC Range: 0.40 to .70.
   6. STC Range: 35 to 39.
   7. Flame Spread: ASTM E 1264; Class A (UL)
   8. Edge: Tongue and Groove.
   9. Surface Color: White.
   10. Pattern: Fine Fissured (verify on site).

C. Accessories:
   1. Adhesive: Acoustical tile cement.
   2. Edge molding: Slip-on molding with 15/16” flange, Armstrong #7842 (for 5/8” tiles) or approved.
   3. Touch-Up Paint: White latex paint approved by the ceiling tile manufacturer for the purpose.

PART 3 EXECUTION

3.1 INSPECTION

A. Examination
1. Prior to work of this section, carefully inspect the substrates to which the ceiling tiles are to be attached to verify that they are structurally sound, smooth, level, and otherwise acceptable per tile manufacturer’s recommendations.
2. Verify that suspended ceiling systems may be installed in strict accordance with all pertinent codes and regulations, the reviewed shop drawings, and the manufacturer's recommendations.
3. Do not proceed with installation until all wet work such as concrete, terrazzo, plastering and painting has been completed and thoroughly dried out, unless expressly permitted by manufacturer's printed recommendations.

B. Discrepancies
1. In the event of discrepancy, immediately notify Contractor.
2. Do not proceed in areas of discrepancy until all such discrepancies have been corrected.

3.2 PREPARATION

A. Measure each ceiling area and establish layout of acoustical units to balance border widths at opposite edges of each ceiling. Avoid use of less than half width units at borders, and comply with reflected ceiling plans. Coordinate panel layout with mechanical and electrical fixtures.

3.2 INSTALLATION

A. Suspension System
1. Install suspension system in strict accordance with requirements of ASTM C636-86, manufacturer's recommendations and reviewed shop drawings.
2. Attach hangers to structure with suitable mechanical devices as required to insure development of the full hanger strength.
3. Wall Moldings:
   a. Install wall molding at intersection of suspended ceiling and vertical surfaces.
   b. Miter corners where wall moldings intersect, or install corner caps.
   c. Securely attach to vertical surface with mechanical fasteners.
4. Hang system independent of walls, columns, ducts, pipes and conduit. Where carrying members are spliced, avoid visible displacement of face plane of adjacent members.

B. Lay-In Acoustical Units
1. Install to line and level, symmetrical with rooms and spaces, and with due regard to appearance and structural stability.
2. Install all acoustical units so that linearity of pattern is in one direction only.
3. Minimum width of border units: One-half unit dimension.

C. Recessed Troffer Lighting Fixtures

1. Install acoustical units surrounding recessed troffer lighting fixtures with hold-down clips to prevent movement or displacement of units.
2. Unless another system is approved, protect lighting fixtures (in 1-hour ceiling system) with 1-hour UL fire rated enclosure as follows:
   a. Protect lighting fixtures with mineral fiber board, 1-1/4” thick, cut into pieces and job formed into four sided enclosures, triangular in cross section, approximately 1/2” longer and wider than the fixture with sufficient depth to provide at least 1/2” clearance between the fixture and the enclosure.
   b. Hold the pieces together with 18 SWG galvanized steel wire at corners.
   c. Provide gap at top of enclosure and overlap on adjacent lay-in panels as required by conditions of the installation.

D. Lateral Force Bracing
1. Where substantiating design calculations are not provided.
2. Horizontal restraints shall be effected by four No 12 gauge wires secured to the main runner within 2 inches of the cross runner intersection and splayed 90 degrees from each other at an angle not exceeding 45 degrees from the plane of the ceiling.
3. A strut fastened to the main runner shall be extended to and fastened to the structural members supporting the roof or floor above.
4. The strut shall be adequate to insist the vertical component induced by the bracing wires.
5. These horizontal restraint points shall be placed 12 feet on center in both directions with the first point within 6 feet from each wall.
6. Attachment of the restraint wires to the structure above shall be adequate for the load imposed.
7. Lateral force bracing members shall be spaced a minimum of 6 inches from all horizontal piping duct work that is not provided with bracing restraints for horizontal forces.
8. Bracing wires shall be attached to the grid and to the structure in such a manner that they can support a design load of not less than 200 pounds or the actual design load, whichever is greater, with a safety factor of 2.

E. Light Fixtures
1. Lighting fixtures weighing less than 56 pounds shall have. in addition to the requirements outlined above, two No. 12 gauge hangers connected from the fixture housing to the structure above. These wires may be slack.
2. Lighting fighting weighing 56 pounds or more shall be supported directly from the structure above by approved hangers.
3. Pendant-hung lighting fixtures shall be supported directly from structure above using No. 9 gauge wire or approved alternate support without using the ceiling suspension system for direct support.

3.3 INSTALLATION, 12”x12” ACOUSTICAL TILE

A. Install 12”x12” ceiling tile by glue-up method to gypsum board or other suitable substrate, using acoustical tile cement and (2) black trim head screws.

B. Install with wall moldings at ceiling perimeter.

3.4 ADJUSTING AND CLEANING

A. Replace damaged and broken panels.

B. Clean exposed surfaces of acoustical ceilings, including trim, edge moldings, and suspension members. Comply with manufacturer's instructions for cleaning and touch up of minor finish damage.

C. Remove and replace work that cannot be successfully cleaned and repaired to permanently eliminate evidence of damage.

3.5 EXTRA STOCK

A. Provide 2 unopened boxes of each type of tile to the School District.

END OF SECTION 09 51 00

SECTION 09 90 00
PAINTING

PART 1 GENERAL

1.1 SUMMARY

A. Contract Conditions: Work of this Section is bound by the Contract Conditions and Division 1, bound herewith, in addition to this Specification and accompanying Drawings.

B. Provide painting and surfacing preparation for all interior and exterior surfaces, including electrical and mechanical equipment.

C. Related Sections:
1. Gypsum Board: Section 09 25 00.

1.2 SUBMITTALS

A. Manufacturer's Literature:
1. Product Data: Provide manufacturers product data on specified products, describing physical and performance characteristics, method of application.
2. Maintenance Data: Provide maintenance procedures, recommended maintenance materials.

B. Field Samples:
1. Before proceeding on actual Contract Work, apply where directed each specified Coating on actual Work Surfaces.
   a. Include at minimum the following:
      1) Ceiling: 100 square feet.
3. Simulate Contract Lighting during Owner's review.
4. Approved Sample represents Minimum Acceptable Standard for Subsequent Work.
5. Approved Samples, in like new condition, may be used in Contract Work.

1.3 QUALITY ASSURANCE & PRODUCT HANDLING

A. Provide products of acceptable manufacturers.
1. Container labeling shall include:
   a. Manufacturer's name
   b. Type of Material
   c. Brand name and code
   d. Manufacturer's batch number
   e. Manufacturer's Product number
   f. Drying time
   g. Color designation
   h. Instructions for mixing and reducing.

B. Applicator:
1. Company specializing in commercial painting special coatings and finishing with five years experience.
2. Use only qualified journeyman painters for the mixing and application of paint on exposed surfaces.

3. In the acceptance or rejection of installed painting, no allowance will be made for lack of skill on the part of painters.
4. Conform to recommendations of the PDCA (Painting and Decorating Contractors of America) and SSPC (Steel Structures Painting Council) manuals.

C. Delivery, Storage, Handling:
1. Deliver products to site in original sealed and labeled containers; inspect to verify acceptance.
2. Store in suitable location where directed by General Contractor.
3. Protect against damage and contamination.
4. Remove unacceptable Materials from the Project Site.

D. Environmental Requirements
1. Provide continuous ventilation and heating facilities to maintain surface and ambient temperature above 45 deg F (70 deg F for Epoxy) for 24 hours before, during, and 48 hours after application of finishes, unless required otherwise by manufacturer's instructions.
2. Do not work:
   a. Where Dust or insects are present.
   b. Where inclement weather may damage coating surface.
   c. When relative humidity is above 85 percent.
   d. On damaged or wet surfaces.
   e. With less than 30 foot candles of lighting measured mid-height of working surface.

1.4 COLORS

A. Colors of paints shall match existing adjacent finish.

PART 2 PRODUCTS

2.1 MATERIALS

A. Products for each general purpose shall be of same Manufacturer. Do not use products of different manufacturers over one another, except for Shop Prime Coat specified in other sections.

B. Galvanized Steel Pretreatment Materials:
1. Solvent: Toluene, or approved.
2. Metal Conditioner: ZRC Metal Conditioner, Oakite 33, Porterprep 99, Keeler & Long 6235, or approved.

C. Paint Materials:
1. Approved manufacturer and line:
   a. Sherwin Williams “Duration”.

D. Mixing and Tinting:
1. Follow Manufacturer's instructions.
2. Unless otherwise instructed by Manufacturer, deliver Coatings factory mixed to Job site.
3. Job mix and Job tint only when required by Manufacturer.

4. Mix only in clean, rust resistant containers.
5. Use Tinting Colors recommended by Coating Manufacturer.
6. Factory add Fungicidal Agent to all Exterior Coatings and to any Interior Coatings located in high humidity Spaces.

E. Accessory Materials: Linseed oil, shellac, turpentine, paint thinners and other materials not specifically indicated but required to achieve the finishes specified, of commercial quality.

PART 3 EXECUTION

3.1 INSPECTION

A. Verify that surfaces are ready to receive work as instructed by the product manufacturer.

B. Examination
1. Inspect surfaces, report unsatisfactory conditions in writing that will adversely effect Work execution, permanence, or quality. Give particular attention to Primer Coatings applied by other Trades, and to existing surfaces scheduled to receive new coatings; beginning work means acceptance of substrates.
2. Verify that Door Hardware has been removed, as specified in Section 08710.
3. Prior to starting work, notify General Contractor in writing about defects requiring correction.
4. Do not apply additional coats until completed coat has been inspected and approved by Architect. Only inspected and approved coats will be considered in determining number of coats applied.

C. Measure moisture content of surfaces using an electronic moisture meter. Do not apply finishes unless moisture content of surfaces are below the following maximums:
1. Gypsum Wallboard: 12 percent.

D. Beginning of application means acceptance of surfaces.

3.2 PROTECTION

A. General:
1. Protect adjacent work with drop cloths; clean paint spatters and stains from finished surfaces.
2. Before applying paint or other finish, remove or provide ample protection for hardware, accessories, plates, light fixtures, and similar items; replace upon completion, using only workers skilled in the particular trade.
3. Remove doors to finish bottom edge.
4. Do not dump waste materials, including thinners, on the site.
5. Cover or otherwise protect Paint Storage and Mixing Room.

B. Repair damage to other surfaces caused by work of this Section.

C. Furnish drop cloths, shields, and protective methods to prevent spray or droppings from disfiguring other surfaces.

D. Remove empty paint containers from site.

E. Fire Protection
1. Take extraordinary care to prevent fire.
2. Open coating containers only when needed.
3. Keep rubbing cloths and oily rags submersed in water.

3.3 PREPARATION

A. Remove any loose material, dust, or foreign matter.

B. Correct minor defects and clean surfaces which affect work of this Section.

C. Shellac and seal marks which may bleed through surface finishes.

D. Gypsum Board Surfaces:
1. Latex fill minor defects.
2. Spot prime defects after repair.

3.4 APPLICATION

A. General:
1. Install materials and systems in accordance with manufacturer's instructions and approved submittals. Install materials and systems in proper relation with adjacent construction and with uniform appearance. Coordinate with work of other sections.
2. Do not apply initial coating until surface moisture content is within limitations recommended by coating manufacturer. Where in doubt test with moisture meter.
3. Except as otherwise specified hereunder, apply coatings with suitable brush, roller, or spray equipment recommended by coating manufacture.
4. Maintain brushes, rollers, and spray equipment clean, free from contaminates, and suitably prepared for conditions of use.
5. Do not exceed coating manufacturer's specified coating application rate.
6. Follow coating manufacturer's recommended drying time between succeeding coats.
7. Apply each coat of paint slightly darker than preceding coat unless otherwise approved.
8. Apply finish coats smooth, free of brush marks, streaks, laps, coating pile-up, and skips.
9. Leave any moldings and ornaments clean, true to detail, and without excessive coating build-up in corners and depressions.
10. Where coating abuts other materials or colors, cut coating edge clean, sharp, and with no overlap.
11. Finish registers, grills, exposed conduit, raceways, electrical cabinets and the like to match adjacent surface.

B. Field Quality Control:
1. Before proceeding with remaining Work, request Architect to inspect each first finished Room, Space, and Item for acceptability.
2. Dry Film Thickness

a. General, minimum dry mil thickness shall be 1 mil per coat of material applied for all surfaces, or as specifically referenced.
b. Measurement:
   1) Provide and use a "Tooke Dry Film Thickness Gage," or other gage approved by the Architect, to provide the dry mil thickness of the coating applied.
   2) Recoat entire wall where work measures less than specified thickness.

3.5 MECHANICAL & ELECTRICAL

A. Refer to appropriate Sections in Division 15 and 16 for schedule of color coding and identification banding of equipment, ductwork, piping, and conduit.

B. Paint shop primed equipment.

C. Remove unfinished louvers, grilles, covers, and access panels on mechanical and electrical components and paint separately.

D. Prime and paint insulated and exposed pipes, conduit, boxes, insulated and exposed ducts, hangers, brackets, collars and supports, except where items are prefinished.

E. Replace identification markings on mechanical or electrical equipment when painted accidentally.

F. Paint interior surfaces of air ducts, and convector and baseboard heating cabinets that are visible through grilles and louvers with one coat of flat black paint, to limit of sight line. Paint dampers exposed behind louvers, grilles, and convector and baseboard cabinets to match face panels.

G. Paint exposed conduit and electrical equipment occurring in finished areas, including panel doors and covers.

H. Paint both sides and edges of plywood backboards for electrical and telephone equipment before installing equipment.

I. Replace electrical plates, hardware, light fixture trim, and fittings removed prior to finishing.

3.6 CLEANING AND REPAIR

A. As Work proceeds, promptly remove paint where spilled, splashed, or spattered.

B. During progress of Work maintain premises free of unnecessary accumulation of tools, equipment, surplus materials, and debris.

C. Collect waste, cloths, and material which may constitute a fire hazard, place in closed metal containers and remove daily from site.

D. Unless otherwise approved, refinish entire surface where portion of coating is unacceptable.

E. Including Work of other Trades, clean, repair and touch-up, or replace when directed, Products which have been soiled, discolored, or damaged by work of this Section.

3.7 PAINT SCHEDULE

A. General
1. Prime coats specified below may be omitted where Factory applied Shop Coatings have been applied by other Trades.
2. Note primer sealer required to be applied prior to final finish for level 3, 4, or 5 gypsum board under work of this section.
3. Existing painted or varnished surfaces to be painted:
   a. Scuff sand painted or varnished wood or metal surfaces.
   b. Prime with bonding primer recommended by paint manufacturer prior to applying finish coats.
   c. Bonding primer shall replace any primer listed in schedule below.
4. Quantities of coats specified below are minimum. Finished Work shall be even, uniform, and free from cloudy and mottled appearance. Apply additional coats where necessary to hide substrate.
5. Minimum Dry Film Thickness specified below include Prime Coat and Finish Coats combined.

B. Interior Paint Schedule
1. Gypsum Board/Veneer Plaster/Gypsum Plaster
   a. 1 coat acrylic latex primer/sealer applied prior to texture.
   b. 1 coat acrylic latex primer/sealer applied after texture (not required at smooth finish walls).
   c. 2 coats interior latex enamel, semi-gloss, apply final coat with roller.
   d. Minimum dry thickness: 3.3 mils.
2. Steel (Unprimed):
   a. 1 coat rust inhibitive alkaline primer.
   b. 2 coats latex enamel, semi-gloss.
   c. Minimum dry thickness: 3.1 mils.
3. Steel (Primed):
   a. Touch-up with original primer.
   b. 2 coats latex enamel, semi-gloss.
   c. Minimum dry thickness: 3.1 mils.
4. Steel (Galvanized)
   a. 1 coat galvanized iron primer.
   b. 2 coats latex enamel semi-gloss.
   c. Minimum dry thickness: 3.1 mils.
9. Steel, Primed (for exposed joist, girders, duct work piping, ductwork etc):
   a. 1 coat latex enamel.

END OF SECTION 09 90 00

SUNRISE ELEMENTARY SCHOOL

TABLE OF CONTENTS

October 21, 2020

SECTION 220500 – PLUMBING MATERIALS AND METHODS

PART 1 - GENERAL

1.1 DESCRIPTION

A. The provisions of the General Requirements, Supplementary Requirements, and Division 1 apply to the plumbing work specified in this Division.

B. The requirements of this Section apply to the plumbing systems specified in these Specifications and in other Division 22 sections.

C. Provide all items, articles, materials, equipment, operations and/or methods listed, mentioned, shown and/or scheduled on the Drawings and/or in these Specifications, including all labor, supervision, services, permits, fees, and incidentals necessary and required to provide a complete and operable facility with complete systems as shown, specified, and required by applicable codes.

D. The work shall include, but not be limited to, the following systems:

1. Replacement of the domestic water heating system.

E. Advise subcontractor, suppliers, and vendors involved in the work specified in this Section of the applicable requirements.

1.2 QUALITY ASSURANCE

A. All work and materials shall conform to all applicable local and state codes and all federal, state and other applicable laws and regulations. All clarifications and modifications which have been cleared with appropriate authorities are listed under the applicable sections. All electrical products shall bear the label of a recognized testing laboratory such as UL or CSA.

B. Whenever the requirements of the Specifications or Drawings exceed those of the applicable code or standard, the requirements of the Specifications and Drawings shall govern.

C. Codes and Standards: Comply with the provisions of the following referenced codes, standards and specifications:

1. Federal Specifications (FS)
2. American National Standards Institute (ANSI)
3. National Electrical Manufacturer's Association (NEMA)
4. National Fire Protection Association (NFPA)
5. Underwriters Laboratories, Inc. (UL)
6. Factory Mutual (FM)
7. International Building Code (IBC) with State and Local Amendments
8. International Mechanical Code (IMC) with State and Local Amendments
9. Uniform Plumbing Code (UPC) with State and Local Amendments
10. American Society for Testing and Materials (ASTM)

11. Americans with Disabilities Act (ADA)
12. International Fire Code (IFC) with State and Local Amendments
13. Energy Policy Act (EPAct)
14. Manufacturers Standardization Society (MSS)
15. National Sanitation Foundation (NSF)
16. American Gas Association (AGA)

D. Each piece of equipment furnished shall meet all detailed requirements of the Drawings and Specifications and shall be suitable for the installation shown. Equipment not meeting all requirements will not be acceptable, even though specified by name. Where two or more units of the same class of equipment are furnished, use product of the same manufacturer; component parts of the entire system need not be products of same manufacturer. Furnish all materials and equipment, new and free from defect and of size, make, type and quality herein specified or approved by the Architect. All materials shall be installed in a neat and professional manner.

E. All apparatus shall be built and installed to deliver its full rated capacity at the efficiency for which it was designed.

F. The Drawings and Specifications are complementary. What is called for by one shall be as though called for by both.

G. Drawings: Do not scale drawings for roughing-in measurements, nor use as shop drawings. Make field measurements and prepare shop drawings. See Article 3.01 for more requirements. Coordinate work with shop drawings of other specification divisions.

H. Field Wiring: It is the intent of these specifications that all systems shall be complete and operable. Refer to all drawings and specifications, especially the electrical drawings, to determine voltage, phase, circuit ampacity and number of connections provided. Provide all necessary field wiring and devices from the point of connection indicated on the electrical drawings. All equipment shall be installed in compliance with the Electrical Code and the equipment's UL listing. Bring to the attention of the Architect in writing, all conflicts, incompatibilities, and/or discrepancies prior to bid or as soon as discovered.

1.3 WORK OF OTHER CONTRACTS

A. Work under this contract shall be conducted in a manner to allow for the future installations of such equipment or items listed in other sections of this Specification.

1.4 WORK OF OTHER DIVISIONS

A. Work under this Division shall be conducted in a manner to cooperate with the installation of such equipment or items as specified in other Divisions.

B. HVAC piping systems, fuel piping systems, fire suppression piping systems, and control devices and control wiring relating to the heating and air conditioning systems are specified under other Divisions of these Specifications except for provisions or items specifically noted on the Drawings or specified herein.

C. Consult all Drawings and Specifications in this project and become familiar with all equipment

to be installed. Coordinate all aspects of the construction with the other trades on the job to ensure that all work and materials required to provide a complete and operational facility are included in the bid.

D. All sections of Division 22 are interrelated and shall be considered in their entirety when interpreting any material, method, or direction listed in any section of Division 22. Individual sections are not written for specific subcontractors or suppliers but for the general contractor.

1.5 SHOP DRAWINGS, PRODUCT DATA, AND SAMPLES (SUBMITTALS)

A. Submit in accordance with Division 1 full technical and descriptive shop drawing data on proposed materials and equipment as detailed in each section.

B. The Contractor shall verify that all equipment submitted can be delivered and installed within the time constraints of the construction period.

C. Include the manufacturer, type, style, catalog number, complete specification, certified dimensions, and description of physical appearance for each item and option submitted. Reproduction of catalog data sheets shall be clean and legible to show all details, including gauge of metal used.

D. Include only information on exact equipment to be installed, not general catalogs of the manufacturer. Where sheets show proposed equipment as well as other equipment, identify proposed equipment with rubber stamp arrow or similar concise method.

E. Submit with each copy a transmittal letter verifying that all included equipment submittals have been carefully considered for quality, dimensions, function, and have been coordinated with the Drawings and Specifications. Guarantee that proposed materials will meet or exceed the quality and function of those specified.

F. Include field wiring diagrams and connection diagrams for all control and/or low voltage systems, including floor plans.

G. Submittal Review: The submittal review process is a means to provide quality control. The action noted to be taken (or where conflicts with the contract documents are not noted) shall not be interpreted by the Contractor as automatic "change orders." Approval of the data for substitution and shop drawings shall not eliminate the contractor’s responsibility for compliance with Drawings or Specifications, nor shall it eliminate the responsibility for freedom from errors of any sort in the data discovered prior to or after the review process. Deviations, discrepancies, and conflicts between the submittals and the Contract Documents shall be called to the Architect's attention in writing at the time of transmittal of the data.

H. Submittals shall be in the form of PDF documents. Arrange submittals numerically with specification sections identified in tabs. All required sections shall be submitted at one time. **Partial submittals will be rejected without review.**

1.6 PRODUCT SUBSTITUTION

A. Materials other than those specified may be approved for this project providing a written request

is submitted to the Architect prior to bid in accordance with Instructions to Bidders. Requests shall include complete specifications, dimensions, manufacturer and catalog number for each item for which approval is desired. If, in the opinion of the Architect, the material is not complete or if it is not an acceptable substitute, he may reject it. The Architect's evaluation will be based solely on the material submitted.

1.7 CHANGE ORDERS

A. All supplemental cost proposals by the Contractor shall be accompanied by a complete itemized breakdown of labor and materials without exception. At the Architect's request, the contractor's estimating sheets for the supplemental cost proposals shall be made available to the Architect. Labor must be separated and allocated for each item of work.

1.8 RECORD DOCUMENTS

A. Project Record (As-Installed) Drawings:

1. Maintain a set of record drawings on the job site as directed in Division 1.
2. Keep Drawings clean, undamaged, and up to date.
3. Record and accurately indicate the following:
   a. Depths, sizes, and locations of all buried and concealed piping and all cleanouts, whether concealed or exposed, dimensioned from permanent building features.
   b. Locations of all valves with assigned tag numbers.
   c. Changes, additions, and revisions due to change orders, obstructions, etc. Eradicate extraneous information.
   d. Locations of tracer wire terminal points.
   e. Model numbers of installed equipment.
4. Make Drawings available when requested by Architect for review.
5. Submit as part of the required Project Closeout documents. Final submittal will be in the form of reproducible drawings.
6. Quality of entire set of project record drawings to match the quality of the contract documents; quality to be judged by Architect. Computer-aided design drafting (CADD) shall be used to complete project record drawings. Use standards set in contract documents. Note field modifications, all addenda and change order items on project record drawings. If deficiencies are found in either the quality or the accuracy of the drawings, they will be returned unapproved. Additional review of subsequent submissions shall be at the contractor’s expense.

B. Operating and Maintenance Manuals: Submit Operating and Maintenance Instructions, including manufacturer's service data, wiring diagrams, and parts lists and vendors for all serviceable items of equipment, valve charts, balancing data, final control diagrams showing final set points, duct and piping pressure test reports, equipment startup records, and any additional equipment added by change order. Provide any performance curves, data, and model numbers from submittals. Comply with provisions of Division one where applicable to the mechanical work. Submittal shall be in the form of a PDF file per specification section. Arrange submittals numerically with equipment type or classification identified in tabs. Manufactures O&M manuals shall be provided as a single PDF file that can be hyper-linked by Owner for reference. O&M manuals that are a series of PDF files will not be accepted.

1.9 WARRANTY

A. Furnish, prior to application for final payment, three copies of written and signed guarantee effective a period of one year from date of completion and acceptance of entire project; agree to correct, repair and/or replace defective materials and/or equipment or the results of defective workmanship without additional expense to the Owner. Where no response satisfactory to the Owner has occurred within three working days from the written report of a warranty covered defect, the contractor shall agree to pay for the cost of repair of the reported defect by a contractor of the Owner's choice.

B. Where the manufacturer's guarantee exceeds one year, the longer guarantee shall govern and include the Contractor's labor.

C. Warranty period shall begin once all phases of construction are complete.

PART 2 - PRODUCTS

2.1 GENERAL

A. General: Provide all new materials and equipment, identical to apparatus or equipment in successful operation for a minimum of two years. Provide materials of comparable quality omitted here but necessary to complete the work. Maximum allowable variation from stated capacities, minus 5% to plus 10% as approved in each case.

B. Compatibility: Provide products which are compatible with other portions of the work and provide products with the proper or correct power and fuel-burning characteristics, and similar adaptations for the project.

C. Efficiency: Service (Domestic) Water Heating Equipment shall comply with ASHRAE Standard 90.1-2016 and the State Energy code. Where equipment efficiencies are indicated, the use of alternate or substitute manufacturer’s equipment with lower efficiencies is not permitted.

D. Storage and Handling:

1. Delivery: Deliver to project site with manufacturer's labels intact and legible.
2. Handling: Avoid damage.
3. Storage: Inside protected from weather, dirt and construction dust. Where necessary to store outside, elevate well above grade and enclose with durable, waterproof wrapping.

2.2 METERS AND GAUGES

A. General: Install meters and gauges where shown on the plans or specified elsewhere in these specifications.

B. Pressure-Temperature Test Plugs:

1. ¼” or ½” NPT fitting of solid brass capable of receiving either an 1/8” OD pressure or temperature probe and rated for zero leakage from vacuum to 1000 psig. Neoprene valve

core for temperatures to 200 deg. F., Nordel to 350 deg. F.

2. Provide for each test plug a pressure gauge adapter with 1/16” or 1/8” OD pressure probe.
3. Furnish a test kit containing one 2-1/2” dial pressure test gauge of suitable range, one gauge adapter with 1/16” or 1/8” OD probe and two 5” stem pocket test thermometers – one 0 to 220 degrees F and one 50 to 550 degrees F. Turn the kit over to the Architect.
4. Cisco “P/T Plugs,” Peterson “Pete’s Plug” or approved substitute.

C. Thermometers: Liquid-in-glass, adjustable stem, separable sockets, plus 40 to 240 degrees F range (unless indicated otherwise). Weiss numbers are listed. Equivalent Taylor, Trerice, Weksler or approved substitute.
1. Wide case (9”) in equipment rooms and all major equipment items. Weiss “9VS” series.
2. Narrow case (7”) in all other locations. Weiss “7VS” series.

D. Pressure Gauges: Install on discharge of all pumps and where shown on Drawings 4-1/2” dial, 0-100 psig graduation pressure gauges with Ashcroft No. 1106 pulsation dampers and stop cocks. Weiss UGE-1 or equivalent Ashcroft, Marsh, Trerice, Weksler.

2.3 VALVES

A. General: Provide factory fabricated valves of the type, body material, temperature and pressure class, and service indicated. Bronze gate, globe and check valves shall comply with MSS-SP-80. Ball valves shall comply with MSS-SP-110. Iron gate and globe valves shall comply with MSS-SP-70. Iron check valves shall comply with MSS-SP-71. Butterfly valves shall comply with MSS-SP-67. Valve size same as connecting pipe size.

B. Acceptable Manufacturers: Milwaukee, Crane, Grinnell, Nibco, Hammond, Stockham, Legend, Watts, and Walworth. Grooved end valves Victaulic, Gruvlock, or accepted substitute. NIBCO numbers are given except as noted. Where possible, provide valves from a single manufacturer.

C. Valve styles: Domestic hot and cold water.

1. Valves 2" and Smaller:
   a. Ball: Two-piece, bronze body, certified lead free, full port, 600 psi WOG, Fig. T/S-585-70-LF.
   b. Check: Bronze body, certified lead free, swing check, 200 psi WOG, T/S-413B (bronze disc) or T/S-413Y (Teflon disc).

D. Insulated Valves: Install extended-stem valves in all piping specified as insulated, and arrange in the proper manner to receive insulation.

E. Selection of Valve Ends (Pipe Connections): Select and install valves with ends matching the types of pipe/tube connections.

2.4 HANGERS AND SUPPORTS

A. General: Provide factory-fabricated horizontal piping hangers, clamps, hanger rod, inserts, supports, etc., of the indicated MSS type and size. The Manufacturers Standardization Society (MSS) of the Valve and Fittings Industry Practice SP-58 and SP-69 are referenced in this

section.

B. Manufacturers: B-Line, Carpenter & Paterson, Grinnell, Michigan, Superstrut, Tolco, Erico, or accepted substitute. Grinnell figure numbers in parentheses where applicable (or other manufacturers as noted).

C. Corrosion Protection: Provide materials which are zinc plated or factory painted to prevent corrosion. Prevent electrolysis in the support of copper tubing by the use of hangers and supports which are copper plated, plastic coated, or by other recognized industry methods.

D. Seismic Requirements: Provide seismic restraints in accordance with OSSC Section 1613. Design restraint systems in accordance with “Seismic Restraint Manual: Guidelines for Mechanical Systems," Second Edition, 1998, SMACNA, or “A Practical Guide to Seismic Restraint” ASHRAE RP-812, 1999.

E. Horizontal Piping Hangers and Supports:

1. Adjustable Clevis Hanger: MSS Type 1 (Fig. 260).
2. Adjustable Band Hanger: MSS Type 7 (Fig. 97), fabricated from steel.
3. Adjustable Swivel-Band Hanger: MSS Type 10 (Fig. 70).
4. Clamp: MSS Type 4 (Fig. 212, 216).
5. Double-Bolt Clamp: MSS Type 3 (Fig. 295A, 295H), including pipe spacers.
6. Adjustable Saddle-Support: MSS Type 36 (Fig. 258) and MSS Type 37 (Fig. 259), including saddle, pipe and reducer. Fabricate base-support from steel pipe and include cast-iron flange or welded-steel plate.
7. Channel Support System: Galvanized, 12 gauge channel and bracket support systems, single or double channel as indicated on the Drawings or as required by piping and equipment weights. Grinnell "Power Strut" channel. Acceptable Manufacturers: Super Strut, Globestrut, Bee, Kindorf or Unistrut.

F. Vertical Pipe Clamps:

1. Two-Bolt Riser Clamp: MSS Type 8 (Fig. 261).
2. Four-Bolt Riser Clamp: MSS Type 42 include pipe spacers at inner bolt-holes.

G. Hanger Attachment:

1. Hanger Rod: Rolled threads, zinc plated. Right hand threaded.
2. Turnbuckles: MSS Type 13 (Fig. 230).
3. Weldless Eye-Nut: MSS Type 17 (Fig. 290).
4. Malleable Eye-Socket: MSS Type 16 (Fig. 110R).
5. Clevises: MSS Type 14 (Fig. 299).

H. Building Attachments:

1. Concrete Inserts: MSS Type 18 (Fig. 282), steel or Grinnell Power-Strut PS349 continuous channel. Acceptable Manufacturers: Michigan Hanger, Globestrut, Unistrut, Super Strut.
2. Clamps: MSS Type 19 (Fig. 285, 281), Type 20, 21 (Fig. 225, 226, 131), Type 23 (Fig.

86, 87, 88), Type 25 (Fig. 227), Type 27 through 30 where applicable.

2.5 IDENTIFICATION MARKERS

A. Pipe Markers:

1. Adhesive pipe markers of width, letter size and background color conforming to ANSI A13.1.
2. Acceptable Manufacturers: Brady B946 with arrow banding tape or similar Seaton, Zeston, MSI.

B. Nameplates:

1. Engraved nameplates, 1/16" thick, laminated 2-ply plastic, bottom ply white, outer ply black, letters formed by exposing bottom ply.
2. Size: 2" by 4" nameplates with 1/4" high letters.

C. Valve Tags:

1. 2" diameter, 18-gauge polished brass tags with 3/16" chain hole and 1/4" high stamped, black-filled service designation.
2. Acceptable Manufacturers: Seaton, Brady, MSI.

2.6 PENETRATION FIRE STOPPING

A. Through-penetration fire stopping system tested and listed by Underwriters Laboratories. 3M, Metacaulk, SpecSeal, or approved.

B. Select system for proper application based on wall construction, type of penetrating item, wall rating, etc.

PART 3 - EXECUTION

3.1 LAYOUT AND COORDINATION

A. Site Examination: Before starting work, carefully examine site and all contract Drawings. Become thoroughly familiar with conditions governing work on this project. Verify all indicated elevations, building measurements, roughing-in dimensions and equipment locations before proceeding with any of the work.

B. Utility Locations: The location of existing utilities, wires, conduits, pipes, ducts, or other service facilities are shown in a general way only on the Drawings and are taken from existing records. Ascertain whether any additional facilities other than those shown on the plans may be present and determine the exact location and elevations of all utilities prior to commencing installation.

C. Coordination:

1. The drawings are based on equipment of a certain manufacturer and may be identified as such. Where alternate manufacturers or approved substitutes are incorporated into the work, any required design changes are the responsibility of the contractor. Such changes may include changes in utility or system connection sizes, location, or orientation, service clearances, structural support or acoustic considerations.
2. Prepare accurate AutoCAD shop drawings showing the actual physical dimensions required for the installation for piping and plumbing devices. Submit drawings prior to purchase/fabrication/installation of any of the elements involved in the coordination. Provide drawing files to other trades for coordination.
3. Cooperate with other trades in furnishing material and information for sleeves, bucks, chases, mountings, backing, foundations and wiring required for installation of mechanical items.
4. Coordinate all work with other trades and determine in advance where interfacing of the mechanical work and other work are required to be connected together. Provide all materials and equipment to make those connections. Submit shop drawings showing required connections where special conditions exist.

D. Discrepancies: Report immediately any error, conflict or discrepancy in Plans, Specifications and/or existing conditions. Do not proceed with any questionable items of work until clarification of same has been made. Should rearrangement or re-routing of piping be necessary, provide for approval the simplest layout possible for that particular portion of the work.

3.2 MECHANICAL EQUIPMENT WIRING

A. Provide all mechanical equipment motors, automatic temperature, limit, float and similar control devices required, with wiring complete from power source indicated on Electrical Drawings.

B. Provide properly rated motor overload and undervoltage protection and all manual or automatic motor operating devices for all mechanical equipment.

C. Equipment and systems shown on the Drawings and/or specified, are based upon requirements of specific manufacturers which are intended as somewhat typical of several makes which may be approved. Provide all field wiring and/or devices necessary for a complete and operable system including controls for the actual selected equipment/system.

D. Provide all starters for mechanical motors. Review Electrical Specifications and Drawings to determine which mechanical motor starters will be provided under the Electrical Specification Sections and provide all others.

3.3 GENERAL INSTALLATION

A. Locating and Positioning Equipment: Observe all Codes, Regulations and good common practice in locating and installing mechanical equipment and material so that completed installation presents the least possible hazard. Maintain adequate clearances for repair and service to all equipment and comply with Code requirements.

B. Arrangement: Arrange piping parallel with primary lines of the building construction, and with

a minimum of 7' overhead clearance in all areas where possible. Unless indicated otherwise, conceal all piping. Locate operating and control equipment properly to provide easy access, and arrange entire mechanical work with adequate access for operation and maintenance. Give right-of-way to piping which must slope for drainage. Set all equipment level or as recommended by manufacturer. Under no conditions shall beams, girders, footings or columns be cut for mechanical items. Casting of pipes into concrete is prohibited unless so shown on Drawings.

C. Adjusting: Adjust and calibrate all automatic mechanical equipment, mixing valves, flush valves, float devices, etc. Adjust flow rates at each piece of equipment or fixture.

D. Building Vapor Barrier: Wherever the building insulation vapor barrier is penetrated by piping, hangers, conduits, etc., provide clear self-adhesive tape recommended by the insulation manufacturer around the penetrations.

E. Concrete Work: Coordinate with other work, particularly other concrete work and accessories. Comply with applicable provisions of Section 03310 for mechanical work concrete, including formwork, reinforcement, mix design, materials (use mix designs and materials accepted for Division 3 work where possible), admixtures, accessories, (including waterstops), placing of wet concrete, finishing, curing, protecting, testing, submittals and other requirements of the concrete work.

3.4 VALVE INSTALLATION

A. General: Comply with the following requirements:

1. Install valves where required for proper operation of piping and isolation of equipment, including valves in branch lines where necessary to isolate sections of piping, and where shown on the drawings. Install valves at low points in piping systems that must be drained for service or freeze protection.
2. Locate valves in accessible spaces (or behind access panels) and so that separate support can be provided when necessary.
3. Install valves with stems pointed up, in the vertical position where possible, but in no case with stems pointed downward from a horizontal plane.

B. Insulated Valves: Install extended-stem valves in all piping specified as insulated, and arrange in the proper manner to receive insulation.

C. Valve Access: Provide access panels to all valves installed behind walls, in furring or otherwise inaccessible.

3.5 INSTALLATION OF HANGERS AND SUPPORTS

A. General: Proceed with the installation of hangers, supports and anchors only after the required building structural work has been completed in areas where the work is to be installed. Correct inadequacies including (but not limited to) the proper placement of inserts, anchors and other building structural attachments.

1. Install hangers, supports, clamps, and attachments to support piping and equipment

properly from the building structure. Use no wire or perforated metal to support piping, and no supports from other piping or equipment. For exposed continuous pipe runs, install hangers and supports of the same type and style as installed for adjacent similar piping.

2. Prevent electrolysis in the support of copper tubing by the use of hangers and supports which are copper plated or by other recognized industry methods.
3. Support fire sprinkler piping independently of other piping and in accordance with NFPA Pamphlet 13.
4. Arrange supports to prevent eccentric loading of joists and joist girders. Locate supports at panel points only.

B. Provisions for Movement:

1. Install hangers and supports to allow controlled movement of piping systems and to permit freedom of movement between pipe anchors, and to facilitate the action of expansion joints, expansion loops, expansion bends and similar units. Install specified seismic restraints to restrict excessive movement.
2. Install hangers and supports so that equipment and piping live and dead loading and stresses from movement will not be transmitted to connected equipment.
3. Install hangers and supports to provide the indicated pipe slopes, and so that maximum pipe deflections allowed by ANSI B31 are not exceeded. Comply with the following installation requirements:
   a. Clamps: Attach clamps, including spacers (if any), to piping outside the insulated piping support. Do not exceed pipe stresses allowed by ANSI B31.
   b. Insulated Pipe Supports: Insulated pipe supports shall be supplied and installed on all insulated pipe and tubing.
   c. Load Rating: All insulated pipe supports shall be load rated by the manufacturer based upon testing and analysis in conformance with ASME B31.1, MSS SP-58, MSS SP-69 and MSS SP-89.
   d. Support Type: Manufacturer's recommendations, hanger style and load shall determine support type.
   e. Insulated Piping Supports: Where insulated piping with continuous vapor barrier or where exposed to view in finished areas is specified, install hard maple wood insulation shields (Elcen Fig. 216) or steel pipe covering protection shields (MSS type 39) at each hanger.

C. Pipe Support:

1. Vertical Spacing: Support at base, at equivalent of every floor height (maximum 10' as required by Code) and just below roof line.
2. Screwed or Welded Steel or Copper Piping: Maximum hanger spacing shall be as follows:

	Steel	Copper
1-1/4" and smaller	7' span	6' span
1-1/2" pipe	9' span	6' span
2" pipe	10' span	10' span
2-1/2" & larger	12' span	10' span

3. Cast Iron Soil Pipe:
   a. Hubless and Compression Joint: At every other joint except when developed

length exceeds 4', then at each joint.

b. Additional Support: Provide at each horizontal branch and/or at concentrated loads to maintain alignment and prevent sagging.

4. Install additional hangers or supports at concentrated loads such as pumps, valves, etc. to maintain alignment and prevent sagging.

5. Support Rod: Hanger support rods sized as follows:

Pipe and Tube Size		Rod Size	
Inches	mm	Inches	mm
1/2” to 4”	12.7 to 101.6	3/8”	9.5
5” to 8”	127.0 to 203.2	1/2”	12.7
10” to 12”	254.0 to 304.8	5/8”	15.9

D. Adjust hangers and supports to bring piping to proper levels and elevations.

E. Provide all necessary structural attachments such as anchors, beam clamps, hanger flanges and brackets in accordance with MSS SP-69. Attachments to beams wherever possible. Supports suspended from other piping, equipment, metal decking, etc., are not acceptable.

F. Horizontal banks of piping may be supported on common steel channel member spaced not more than the shortest allowable span required on the individual pipe. Maintain piping at its relative lateral position using clamps or clips. Allow lines subject to thermal expansion to roll axially or slide. Size channel struts for piping weights.

G. Installation of drilled-in concrete anchors shall comply with the manufacturer’s instructions for working load, depth of embedment, and spacing between anchors and from the edge of the slab. Use only wedge style anchors.

H. Seismic Restraints: Install restraints where recommended in SMACNA "Seismic Restraint Manual." Show analysis of supporting structure, anchorages, and restraints in accordance with OSSC Section 1613 and reference ASCE standard. Seismic restraint system components shall be approved by the California Office of Statewide Health Planning and Development (OSHPD). Acceptable Manufacturers: Amber/Booth, Mason Industries, Tolco, or approved. Contractor shall submit calculations and shop drawings, sealed and signed by a professional engineer, showing seismic restraint design for all equipment, piping and ductwork required to be braced.

3.6 PLUMBING SYSTEM IDENTIFICATION

A. Piping System: Indicate each pipe system by its generic name (abbreviated) as shown/scheduled/specified; except vent and drainage piping. Comply with ANSI A13.1 for marker locations, letter sizes, and colors. Include arrows to show direction of flow and "Electric Traced" signs to identify heat cable wrapped piping. Locate pipe labels in accessible areas as follows:

1. Near each valve, meter, gauge, or control device.
2. Near equipment such as pumps, heat exchangers, water heaters, etc.
3. At piping branch connections.
4. At penetrations (each side) of walls, ceilings, and floors.
5. At access panels and doors.

6. At 25 foot maximum intervals. Provide a minimum of 1 label above each room where lift out ceiling is installed. Reduce intervals in congested areas such as mechanical rooms.

B. Valve Identification: Tag all valves with brass disc and chain. Prepare valve charts indicating valve number, size, location, function and normal position. Use no duplicate numbers in Plumbing and Heating systems. Mount glazed frames containing one set of valve charts in the building mechanical room.

C. Equipment: Provide engraved plastic-laminate signs at locations of major equipment such as heat exchangers, pumps, etc. Identify equipment in field same as on drawings. Permanently mount in an appropriate and effective location.

D. Operation Tags: Where needed for proper and adequate information on operation and maintenance of mechanical systems, provide tags of plasticized card stock, either pre-printed or hand printed to convey the message; example: "DO NOT CLOSE THIS VALVE EXCEPT WHEN THE PUMP IS OFF."

3.7 EQUIPMENT CONNECTIONS

A. Provide complete plumbing connections for all items of equipment requiring such connections, including incidental piping, fittings, trim and labor necessary for a finished working installation.

B. Verify the rough-in and finish requirements for all equipment provided under other Divisions of the work and requiring plumbing connections with equipment supplier and installer prior to rough-in. Minimum branch pipe size for fixtures shall be 1/2".

3.8 PROTECTION

A. Protect all work and materials against loss or damage. Close all pipe openings with caps or plugs. At final completion, thoroughly clean and deliver all work and equipment in an unblemished new condition. Keep all motors and bearings in watertight and dustproof covers during entire course of installation.

B. Protect floors, walls, framing and sheathing where pipe cutting and threading operations are conducted with plastic sheeting under plywood sheets. Extend plastic sheeting beyond the plywood. Clean-up metal cuttings, oil, etc., daily or as necessary to prevent debris from being tracked beyond the protected area. Damages, as determined by the Architect, due to the pipe cutting/threading operation shall be repaired by the responsible trade.

3.9 CUTTING AND PATCHING

A. General: Comply with the requirements of Division 1 for the cutting and patching of other work to accommodate the installation of mechanical work. Do all necessary cutting and patching of existing building and yard surfaces required for completion of the mechanical work. Patch to match finish and color of adjacent surfaces. Coordinate work in remodel and new areas to avoid cutting of new finished surfaces.

3.10 PIPE PENETRATION FIRE STOPPING

A. Install as recommended by manufacturer and in accordance with the product's UL listing. Below are the minimum installation requirements.

1. Install specified penetrating item(s) with required annular spacing in proper size wall or floor opening. Support penetrating item(s) adequately on both sides of construction.
2. Clean all opening and penetrating item surfaces in penetration area to remove loose debris, dirt, oil, wax, grease, old caulking, etc.
3. If needed or required for gypsum or concrete block walls, install specified galvanized steel wire mesh or sleeve recessed and centered inside wall around penetrating item(s) so that it is snug against perimeter of opening.
4. When required, install specified type and depth of backing material in annular space, recessed to required fill depth of fire stopping caulking.
5. Gun, trowel, and/or pump fire stopping sealant to specified depth in annular space around penetrating item(s). Trowel sealant surfaces flush with wall or floor surfaces to a smooth, defect-free finish. Where required, apply specified size caulking bead around penetrating item(s) at zero annular contact areas and tool smooth.

B. Drawings show some, not all, of the penetration. Review architectural drawings for all fire walls.

C. Provide only products having lower volatile organic compound (VOC) content than required by South Coast Air Quality Management District Rule No. 1168.

3.11 MECHANICAL PAINTING

A. Minimum Requirements: All mechanical equipment, piping, insulation, etc., exposed in finished areas, storage rooms and other locations except mechanical equipment rooms will be painted per 099000.

3.12 PLUMBING WORK CLOSEOUT

A. General: Refer to the Division 1 sections for general closeout requirements. Calibrate all equipment requiring same. Complete each system as shown or specified herein and place in operation except where only roughing-in or partial systems are called for. Each system shall be tested and left in proper operation free of leaks, obstructions, or contamination.

B. Record Drawings: Submit record set of drawings required in Division 1 as previously specified in this Section.

C. Closeout Equipment/Systems Operations: Sequence operations properly so that work of project will not be damaged or endangered. Coordinate with seasonal requirements. Operate each item of equipment and each system in a test run of appropriate duration with the Architect present, and with the Owner's operating personnel present, to demonstrate sustained, satisfactory performance. Adjust and correct operations as required for proper performance. Clean and lubricate each system, and replace dirty filters, excessively worn parts and similar expendable items of the work.

D. Operating Instructions: Conduct a walk-through instruction seminar for the Owner's personnel who are to be involved in the continued operation and maintenance of plumbing equipment and

systems. Provide written instructions outlining and explaining the identification system, operational diagrams, emergency and alarm provisions, sequencing requirements, seasonal provisions, security, safety, efficiency and similar features of the systems.

END OF SECTION 220500

SECTION 220700 – PLUMBING INSULATION

PART 1 - GENERAL

1.1 DESCRIPTION

A. The requirements of this section apply to the insulation of plumbing systems specified elsewhere in these specifications.

B. The requirements of Section 220500, Common Plumbing Materials and Methods, also apply to this section.

1.2 QUALITY ASSURANCE

A. Minimum Insulation Thickness and Thermal Performance: Comply with Chapter 13 provisions of the State of Oregon Structural Specialty Code.

B. Composite (Insulation, Jacket or Facing and Adhesives) Fire and Smoke Hazard Ratings: Not to exceed a flame spread of 25 or smoke development of 50 and containing less than 0.1% by weight deca-PDE fire retardant.

C. Component Ratings of Accessories (Adhesives, Mastics, Cements, Tapes, Finishing Cloth for Fittings): Same as "B" requirements above and permanently treated. No water soluble treatments.

1.3 SUBMITTALS

A. Submit catalog data and performance characteristics for each product specified.

1.4 PRODUCT DELIVERY, STORAGE AND HANDLING

A. General: In addition to the requirements specified in Section 220500, the following apply:

1. Deliver insulation, coverings, cements, adhesives and coatings to the site in factory-fabricated containers with the manufacturer's stamp or label affixed showing fire hazard ratings of the products. Store insulation in original wrappings and protect from weather and construction traffic.
2. Protect insulation against dirt, water, chemical and mechanical damage. Do not install damaged insulation. Remove such insulation from project site.

PART 2 - PRODUCTS

2.1 ACCEPTABLE MANUFACTURERS

A. Insulation Manufacturers: Johns Manville, Owens-Corning, Knauf, Certain Teed, Armstrong, Pabco, Imcoa or Nomaco. Johns Manville products are listed unless indicated otherwise.

B. Adhesive Manufacturers: Foster, 3M, Insul-Coustic, Borden, Kingco or Armstrong.

2.2 PIPING INSULATION

A. Interior and Exterior Piping Systems 32 to 180 Deg. F: Glass fiber preformed pipe insulation with a minimum K-value of 0.23 at 75 deg. F, a minimum density of 3.5 pounds per cubic foot within all-service vapor barrier jacket, vinyl or pre-sized finish and pressure sensitive seal containing less than 0.1% by weight deca-PDE fire retardant.

B. Pipe Temperatures Minus 30 to 180 Deg. F: Flexible, preformed, pre-slit, self-sealing elastomeric pipe insulation up to 2-1/8" ID, thermal conductivity of 0.27 BTU/hr. sq. ft./in. at 75 deg. F and vapor transmission rating of 0.2 perms/inch. On cold surfaces, apply in thickness necessary to prevent condensation on the surface at 85 deg. F and 70% RH. Armstrong "Armaflex 2000" or, in concealed locations, Imcoa or Nomaco also approved.

2.3 EQUIPMENT INSULATION

A. Equipment Temperatures Below 70 Deg. F: Flexible, closed cell, elastomeric sheet insulation of 5.5 #/cubic feet density and 0.27 thermal conductivity at 75 deg. F. Armstrong "Armaflex."

B. Equipment Temperatures From 70 to 450 Deg. F: Glass fiber 3 pound density insulation with a 0.23 thermal conductivity at 75 deg. F. Johns Manville "814 Spin-Glas" with "FSK" jacket containing less than 0.1% by weight deca-PDE fire retardant or finished as recommended by manufacturer.

2.4 INSULATION ACCESSORIES

A. Insulation Compounds and Materials: Provide rivets, staples, bands, tapes, adhesives, cements, coatings, sealers, welded studs, etc., as recommended by the manufacturer for the insulation and conditions specified. No staples allowed on cold water piping systems.

B. Interior Tanks and Equipment Insulation Covering: Finished metal jacket or as recommended by the manufacturer for insulation material specified.

C. PVC Protective Jacketing and Valve and Pipe Fitting Covers: Johns Manville Zeston 2000, Proto LoSmoke, or Ceel-Co Ceel-Tite 100 Series with precut fitting fiberglass insulation or approved.

D. Jacket Lap Sealing Adhesives: Foster Drion 85-75 contact cement or approved substitute.

E. Saddles and Shields: Unless otherwise indicated and except as specified in piping system specification sections, install the following types:

1. Steel Pipe-Covering Protection Saddles (MSS Type 39): To fill interior voids with insulation that matches adjoining insulation.
2. Protection Shields (MSS Type 40): Of length recommended by manufacturer to prevent crushing insulation.
3. Thermal-Hanger Shield Inserts: For supporting insulated pipe, 360-degree insert of high-density, 100-psi (690-kPa) minimum compressive strength, water-repellent-treated

calcium silicate or cellular-glass pipe insulation, same thickness as adjoining insulation with vapor barrier and encased in 360-degree sheet metal shield.

PART 3 - EXECUTION

3.1 PIPING INSULATION

A. General: Do not insulate underground piping except at joints and fittings on preinsulated piping unless indicated otherwise. At contractor's option and in accordance with Part 2 of this section, elastomeric insulation may be installed on domestic water piping in thicknesses equivalent to the glass fiber insulation. Installation shall comply with the manufacturer's recommendation with joints and seams completely sealed.

B. Domestic Water Piping:

1. Insulate with glass fiber pipe covering, 1" thick for cold water piping and for 1" and smaller hot water piping; 1-1/2" for 1-1/4" and larger hot water piping.
2. Insulate hot water return piping same as cold water piping.
3. Insulate all water piping exposed to outside weather and freezing temperatures with 1" thickness of glass fiber pipe covering with weather-proof metal jacket. Apply insulation after heat cable is installed.
4. For concealed PEX pipe installations delete requirements for insulation on cold water lines and non-circulated hot water lines. Circulated hot water and hot water recirculation lines to be insulated.

C. Pipe Fittings:

1. Insulate and finish all fittings including valve bodies, bonnets, unions, flanges and expansion joints with precut fiberglass insulation and preformed PVC covers sealed to adjacent insulation jacket for continuous vapor barrier covering over all fittings.
2. Provide removable/reusable insulation covers on 4" and larger valves, unions, flanges, pump casings, strainers and similar fittings or equipment requiring periodic service.

D. Protective Covering: Install continuous protective PVC or metal covering on all piping and fittings in mechanical rooms, accessible tunnels, attic spaces, accessible ceilings, etc., where insulation may be subject to damage. Install with rivets or cement seams and joints.

E. Insulated Piping: Comply with the following.

1. Attach clamps and spacers to piping.
   a. Piping Operating above Ambient Air Temperature: Clamp may project through insulation.
   b. Piping Operating below Ambient Air Temperature: Use thermal-hanger shield insert with clamp sized to match OD of insert.
   c. Do not exceed pipe stress limits according to ASME B31.9.
2. Install MSS SP-58, Type 39 or Type 40 protection saddles, if insulation without vapor barrier is indicated. Fill interior voids with insulation that matches adjoining insulation.
   a. Thermal-hanger shield inserts may be used. Include steel weight-distribution plate

for pipe NPS 4 (DN100) and larger if pipe is installed on rollers.

3. Shield Dimensions for Pipe: Not less than the following.
   a. NPS 1/4 to NPS 3-1/2 (DN8 to DN90): 12 inches (305 mm) long and 0.048 inch (1.22 mm) thick.
   b. NPS 4 (DN100): 12 inches (305 mm) long and 0.06 inch (1.52 mm) thick.
   c. NPS 5 and NPS 6 (DN125 and DN150): 18 inches (457 mm) long and 0.06 inch (1.52 mm) thick.
   d. NPS 8 and NPS 14 (DN200 and DN350): 24 inches (610 mm) long and 0.075 inch (1.91 mm) thick.
   e. NPS 16 and NPS 24 (DN400 and DN600): 24 inches (610 mm) long and 0.105 inch (2.67 mm) thick.
4. Pipes NPS 8 (DN200) and Larger: Include wood inserts.
5. Insert Material: Length at least as long as protective shield.
6. Thermal-Hanger Shields: Install with insulation same thickness as piping insulation.

F. Piping Insulation Lap Seams and Butt Joints: Install insulation jacket in accordance with manufacturer's recommendation and without staples on cold water lines. Where jacket joint and lap seams have not adhered, remove affected section of insulation and reinstall or apply lap sealing adhesive in accordance with manufacturer's instructions.

END OF SECTION 220700

SECTION 221000 – PLUMBING PIPING AND PUMPS

PART 1 - GENERAL

1.1 DESCRIPTION

A. Provide pipe, pipe fittings, piping specialties, pumps and related items required for complete piping system.

B. Related Work: The requirements of Section 220500, Common Plumbing Materials and Methods, also apply to this section.

1.2 QUALITY ASSURANCE

A. General: ASTM, and ANSI Standards are indicated. In addition, special standards are referenced where neither ASTM nor ANSI Standards are applicable.

B. Labeling: All piping shall be continuously and legibly labeled on each length as required by codes and standards and including as a minimum, country of origin, manufacturer's identification marking, wall thickness designation, and applicable standards and approvals. Fittings shall be labeled as required by the referenced standard. Tubular fixture traps shall be stamped with manufacturer's mark and material thickness.

C. Potable Water Valves: Potable water piping materials not limited to faucets, mixing valves, or pressure reducing valves. Valves shall meet NSF Standard 61, Section 9, for drinking water faucets and shall be brass construction. Brass components which contact water within the faucet shall be from brass which contains no more than 3 percent lead by dry weight.

D. Concealed Plastic Piping: No concealed plastic piping inside the building unless approved by Code or Governing Authorities.

E. Definitions: Where piping fluid is not indicated in the following paragraphs, provide similar piping materials for similar fluids (i.e., "make-up water" = "domestic water"; "wet stand pipe" = "fire sprinkler pipe"; "drainage piping" = "sanitary/storm sewer piping").

F. Plumbing System Disinfection shall be performed by an experienced, qualified, chemical treatment agency.

1.3 STORAGE AND HANDLING

A. Provide factory-applied end caps on each length of pipe and tube. Maintain end caps through shipping, storage and handling as required to prevent pipe-end damage and eliminate dirt and moisture from inside of pipe and tube. Protect flanges and fittings from moisture and dirt by inside storage and enclosure, or by packaging with durable, waterproof wrapping.

1.4 SUBMITTALS

A. Submit catalog data for each product specified.

PART 2 - PRODUCTS

2.1 PIPING MATERIALS

A. Copper Pipe and Tube:

1. Application: Domestic water.
2. Pipe: ASTM B88.
   a. Above Ground Domestic Water: Type L hard temper copper with soldered joints.
   b. Underground Domestic Water and Priming Lines: Type L soft annealed with no joints or type K hard tempered copper with silver soldered joints.
3. Fittings: Wrought copper solder-joint fittings, ANSI / ASME B16.22.

B. Plastic Pipe – Drain, Waste, Vent (DWV):

1. Application:
   a. Water heater vent and combustion air duct. Schedule 40 allowed for combustion air duct. Otherwise Schedule 80.
   b. Boiler vent and combustion air duct. Schedule 40 allowed for combustion air duct. Otherwise Schedule 80.
2. Pipe: Schedule 80 Poly(vinyl chloride) (ASTM D1784) (PVC) plastic drain, waste and vent pipe (ASTM D2665 and D1785) and fittings (ASTM D2665) (DWV).
3. Fittings: Provide fittings of the type indicated, matching piping manufacture. Where not otherwise indicated, provide fittings produced and recommended for the service indicated by the piping manufacturer. Glue and primer shall be formulated specifically for condensing duct application. Oatey 530-30884 or equal.

2.2 MISCELLANEOUS PIPING MATERIALS

A. Insulating (Dielectric) Fittings: Not allowed, see section 3 for allowed installation means.

B. Soldering and Brazing Materials: Provide soldering materials as determined by the installer to comply with installation requirements.

1. Tin-Antimony Solder: ASTM B32, Grade 95TA.
2. Lead-Free Solder: ASTM B32, Grade HB. Harris "Bridgit" approved.
3. Silver Solder: ASTM B32, Grade 96.5TS.
4. Flux: Water soluble paste flux.
5. Brazing filler rod: BCuP rod to suit conditions.

C. Strainers: "Y-pattern," bronze body, certified lead free and rated for pressures indicated with blow-off connection and 20 mesh stainless steel screen.

2.3 PUMPS

A. Domestic Hot Water Circulator: Stainless steel body and lead free design in-line circulator with sleeve bearing. Provide with 3 speed switch to allow balancing to actual needs. Grundfos UP series or equal Bell & Gossett, Peerless, or Armstrong. Provide with aqua-stat to operate pump when enabled by DDC system.

PART 3 - EXECUTION

3.1 PIPE INSTALLATION

A. General: Install pipe, tube and fittings in accordance with recognized industry practices and plumbing code standards. Install each run accurately aligned with a minimum of joints and couplings, but with adequate and accessible unions and flanges for disassembly, maintenance and/or replacement of valves and equipment. Reduce sizes (where indicated) by use of reducing fittings.

B. Piping Runs: Route piping close to and parallel with walls, overhead construction, columns and other structural and permanent-enclosure elements of the building. Install piping plumb and level except where pitched for drainage. If not otherwise indicated, run piping in the shortest route which does not obstruct usable space or block access for servicing the building or equipment and avoid diagonal runs. Wherever possible in finished and occupied spaces, conceal piping from view. Do not encase horizontal runs in solid (concrete or CMU) partitions.

C. Ensure all copper piping is protected from contact with non-copper supports. Provide strut cushion below clamp or 2 layers of UPC listed 10 mil tape.

3.2 PIPING JOINTS

A. General: Provide joints of the type indicated in each piping system, and where piping and joint as manufactured form a system, utilize only that manufacturer's material.

B. Solder Copper Tube and Fitting Joints: In accordance ANSI B 828 with recognized industry practice. Cut tube ends squarely. Copper tubing shall be cut with a wheeled tubing cutter or approved copper tubing cutting tool. The tubing shall be cut square to permit proper joining with the fittings. Remove scale, slag, dirt and debris from inside and outside of tubing and fittings before assembly. The tubing end shall be wiped clean and dry. The burrs on the tubing shall be reamed with a deburring or reaming tool. Apply solder flux to joint areas of both tubes and fittings. Insert tube full depth into fitting, and solder in a manner which will draw solder full depth and circumference of joint. Wipe excess solder from joint before it hardens. "T-Drill" field formed tees may be utilized where the main is at least two pipe sizes larger than the branch.

C. Braze Copper Tube and Fitting Joints: Where indicated. Pass a slow stream of dry nitrogen gas through the tubing at all times while brazing to eliminate formation of copper oxide.

D. Insulating (Dielectric) Fittings: Where the "joining of ferrous and non-ferrous piping", use brass valve or brass nipple with length/nominal diameter ratio of 8 or greater rather than dielectric fitting.

E. Changes in Direction: Use fittings for all changes in direction. Run lines parallel with building surfaces.

F. Unions and Flanges: At all equipment to permit dismantling and elsewhere as consistent with good installation practice.

G. Expansion: Provide loops, swing joints, anchors, runouts and spring pieces to prevent damage to piping or equipment.

3.3 MISCELLANEOUS PIPING EQUIPMENT

A. Strainers: Install in a manner to permit access for cleaning and screen removal and with blow-off valve.

3.4 CLEANING

A. General: Clean all dirt and construction dust and debris from all mechanical piping systems and leave in a new condition. Touch up paint where necessary.

B Disinfection of Domestic Water Piping System:

1. Prior to starting work, verify system is complete and clean.
2. Open all drains and fixtures valves in the building starting with the valve nearest the water service line and permit the water to run clear for 10 minutes to eliminate grease, cuttings, flux, and foreign matter.
3. Inject disinfectant at beginning of water system to be disinfected. Introduce free chlorine in liquid form, throughout system to obtain concentration required by local Public Health Department regulations or 50 to 80 mg/L residual.
4. Bleed water from all potable water outlets to ensure distribution and test for disinfectant residual at minimum 15 percent of outlets.
5. Maintain disinfectant in system for 24 hours.
6. If final disinfectant residual tests less than 25 mg/L, repeat treatment.
7. Flush disinfectant from system until residual is equal to that of incoming water or 1.0 mg/L.
8. Take samples no sooner than 24 hours after flushing, from 10 percent of outlets and from water entry, and analyze in accordance with AWWA C601. If any sample fails the analysis, repeat the procedure.
9. Include a copy of the bacteriological analysis in the Operating and Maintenance manuals.
10. If allowed by local jurisdiction, testing is acceptable in lieu of treatment.

3.5 TEST

A. General:

1. Minimum duration of two hours or longer, as directed for all tests. Furnish report of test observation signed by qualified inspector. Make all tests before applying insulation, backfilling, or otherwise concealing piping or connecting fixtures or equipment. Where part of the system must be tested to avoid concealment before the entire system is complete, test that portion separately, same as for entire system.
2. Provide all necessary temporary equipment for testing, including pump and gauges. Remove control devices before testing and do not use piping system valves to isolate sections where test pressure exceeds valve pressure rating. Fill each section with water and pressurize for the indicated pressure and time.
3. Observe each test section for leakage at end of test period. Test fails if leakage is observed or if pressure drop exceeds 5% of test pressure.

B. Repair:

1. Repair piping system sections which fail the required piping test by disassembly and re-installation, using new materials to the extent required to overcome leakage. Do not use chemical stop-leak compounds, solder, mastics, or other temporary repair methods.
2. Drain test water from piping systems after testing and repair work has been completed.

C. Water Piping: Hydrostatic pressure of 100 psig without loss for four hours.

D. Tanks and Equipment: Hydrostatic pressure to 1.5 times operating pressure but do not exceed maximum rated pressure.

3.6 SUPERVISION AND START-UP

A. Adjust flush valves, pressure reducing valves, mixing valves, water heater thermostats, and similar equipment.

END OF SECTION 221000

SECTION 223000 – PLUMBING EQUIPMENT

PART 1 - GENERAL

1.1 DESCRIPTION

A. The requirements of this section apply to the plumbing equipment.

B. Provide plumbing equipment specified and shown on the Drawings.

C. Related Work: The requirements of Section 220500, Common Plumbing Materials and Methods, also apply to this section.

1.2 QUALITY ASSURANCE

A. Code: Comply with requirements of the Oregon State Plumbing Specialty Code.

B. All equipment and component parts shall conform to governing codes. Gas-fired equipment shall be design certified by AGA.

C. Labeling: All equipment shall have permanent labels affixed by the manufacturer listing model number, capacity, efficiency, approvals, and similar characteristics of the product.

PART 2 - PRODUCTS

2.1 PIPING

A. Piping, fittings, pumps, and related items are specified in Section 221000.

2.2 COMMERCIAL GAS-FIRED STORAGE WATER HEATER:

1. AGA and serving utility approved commercial gas-fired heater complying with the state energy code and ASHRAE 90.1-2016 requirements and of size and capacity shown on Drawings. Designed for condensing operation with minimum 95% efficiency**.** 316L stainless steel tank with 2” of non-organic insulation. Digital controller with spark ignition, temperature adjustment and outlet water temperature. Provide with automatic gas pressure regulator, all brass hose bib drain, and ASME code pressure-temperature relief valve. Heater shall be constructed to vent with solid core PVC pipe material.
2. HTP Phoenix or approved substitute.

2.3 WATER HEATER SYSTEM DEVICES

A. Water Heater and Tank Seismic Restraints: For water heaters and tanks, Spacemaker, Holdrite “Quickstrap,” or approved.

B. Domestic Hot Water Expansion Tank: Plastic lined drawn steel tank for potable water with epoxy exterior finish, air charging valve and system piping connection. Butyl rubber diaphragm

with steel retaining ring. Base mounting ring on sizes over 5 gallons. ASME construction on sizes over 10 gallons. Provide with relief valve where working pressure rating is less than 150 psi.

PART 3 - EXECUTION

3.1 UTILITY SERVICE

A. Plumbing Utility Connections: Complete installation. Verify rough in dimensions of equipment prior to installing piping.

3.2 EQUIPMENT INSTALLATION AND CONNECTION

A. All equipment shall be installed plumb and level unless otherwise recommended by the manufacturer.

B. Arrange piping connections to equipment to allow removal and replacement of the equipment without disassembly of connecting piping. Provide valves, unions, flanges, etc. at connection points.

C. Arrange equipment for adequate service access as recommended by the manufacturer and as required by code.

D. Anchor equipment to resist displacement due to seismic events as detailed on the drawings, recommended by the manufacturer, and as required by code and as specified in other sections of these specifications. Provide seismic straps as specified above for tank type water heaters.

E. Install drain pans under all water heaters as specified in Section 220500.

3.3 EQUIPMENT CLEANING

A. Remove construction and shipping protection and thoroughly clean all plumbing equipment just prior to building acceptance.

3.4 SUPERVISION AND START-UP

A. Do not place equipment onto operation until required work of other trades is complete, e.g. venting systems, combustion air ducts, etc.

B. Follow manufacturer's instructions for start-up and adjustment of equipment.

C. Field Services:

1. Contractor shall provide the services of a local factory-authorized representative to supervise all phases of equipment start-up. A letter of compliance with all factory recommendations and installation instructions shall be submitted to the engineer with operation and maintenance instructions.
2. Installation: All aspects of installation of boiler shall be in strict accordance with manufacturer's instructions. Materials shall conform with all manufacturer's

recommendations and shall include a listed vent system.

END OF SECTION 223000

SECTION 230500 – HVAC MATERIALS AND METHODS

PART 1 - GENERAL

1.1 DESCRIPTION

A. The provisions of the General Requirements, Supplementary Requirements, and Division 1 apply to the HVAC work specified in this Division.

B. The requirements of this Section apply to the HVAC systems specified in these Specifications and in other Division 23 sections.

C. Provide all items, articles, materials, equipment, operations and/or methods listed, mentioned, shown and/or scheduled on the Drawings and/or in these Specifications, including all labor, supervision, services, permits, fees, and incidentals necessary and required to provide a complete and operable facility with complete systems as shown, specified, and required by applicable codes.

D. Advise subcontractor, suppliers, and vendors involved in the work specified in this Section of the applicable requirements.

E. Some of the devices specified along with the means and methods are associated with Alternate #1. Alternate #1 is to install the owner provided boilers and pumps to complete the boiler plant as specified and designed in the contract documents. Under base bid piping is installed into the boiler room for the connection by a contractor or owner concurrent with the base bid work.

1.2 QUALITY ASSURANCE

A. All work and materials shall conform to all applicable local and state codes and all federal, state and other applicable laws and regulations. All clarifications and modifications which have been cleared with appropriate authorities are listed under the applicable sections. All electrical products shall bear the label of a recognized testing laboratory such as UL or CSA..

B. Whenever the requirements of the Specifications or Drawings exceed those of the applicable code or standard, the requirements of the Specifications and Drawings shall govern.

C. Codes and Standards: Comply with the provisions of the following referenced codes, standards and specifications:

1. Federal Specifications (FS)
2. American National Standards Institute (ANSI)
3. National Electrical Manufacturer's Association (NEMA)
4. National Fire Protection Association (NFPA)
5. Underwriters Laboratories, Inc. (UL)
6. Factory Mutual (FM)
7. International Building Code (IBC) with State and Local Amendments
8. International Mechanical Code (IMC) with State and Local Amendments
9. Uniform Plumbing Code (UPC) with State and Local Amendments

10. American Society for Testing and Materials (ASTM)
11. Americans with Disabilities Act (ADA)
12. International Fire Code (IFC) with State and Local Amendments
13. Energy Policy Act (EPAct)
14. Manufacturers Standardization Society (MSS)
15. American Gas Association (AGA)

D. Each piece of equipment furnished shall meet all detailed requirements of the Drawings and Specifications and shall be suitable for the installation shown. Equipment not meeting all requirements will not be acceptable, even though specified by name. Where two or more units of the same class of equipment are furnished, use product of the same manufacturer; component parts of the entire system need not be products of same manufacturer. Furnish all materials and equipment, new and free from defect and of size, make, type and quality herein specified or approved by the Architect. All materials shall be installed in a neat and professional manner.

E. All apparatus shall be built and installed to deliver its full rated capacity at the efficiency for which it was designed.

F. The Drawings and Specifications are complementary. What is called for by one shall be as though called for by both.

G. Drawings: Do not scale drawings for roughing-in measurements, nor use as shop drawings. Make field measurements and prepare shop drawings. Coordinate work with shop drawings of other specification divisions. See Article 3.1 for more information and requirements.

H. Field Wiring: It is the intent of these specifications that all systems shall be complete and operable. Refer to all drawings and specifications, especially the electrical drawings, to determine voltage, phase, circuit ampacity and number of connections provided. Provide all necessary field wiring and devices from the point of connection indicated on the electrical drawings. All equipment shall be installed in compliance with the Electrical Code and the equipment's UL listing. Bring to the attention of the Architect in writing, all conflicts, incompatibilities, and/or discrepancies prior to bid or as soon as discovered.

1.3 WORK OF OTHER CONTRACTS

A. Work under this contract shall be conducted in a manner to allow for the future installations of such equipment or items listed in other sections of this Specification.

B. Test and Balance services are provided by the owner.

C. Control devices and installation are provided by the owner.

D. Commissioning services are provided by the owner.

E. Roofing is provided by owner's contractor under other contract.

F. Design and installation of structural revisions below new roof mounted equipment is provided by owner's contractor under other contract.

G. Any reference to work conducted under Phase 2 is outside this Phase 1 construction scope. The information is provided for reference only.

1.4 WORK OF OTHER DIVISIONS

A. Work under this Division shall be conducted in a manner to cooperate with the installation of such equipment or items as specified in other Divisions.

B. Plumbing piping systems and fixtures and fire suppression piping systems are specified under other Divisions of these Specifications except for provisions or items specifically noted on the Drawings or specified herein.

C. Consult all Drawings and Specifications in this project and become familiar with all equipment to be installed. Coordinate all aspects of the construction with the other trades on the job to ensure that all work and materials required to provide a complete and operational facility are included in the bid.

D. All sections of Division 23 are interrelated and shall be considered in their entirety when interpreting any material, method, or direction listed in any section of Division 23. Individual sections are not written for specific subcontractors or suppliers but for the general contractor.

1.5 SHOP DRAWINGS, PRODUCT DATA, AND SAMPLES (SUBMITTALS)

A. Submit in accordance with Division 1 full technical and descriptive shop drawing data on proposed materials and equipment as detailed in each section.

B. The Contractor shall verify that all equipment submitted can be delivered and installed within the time constraints of the construction period.

C. Include the manufacturer, type, style, catalog number, complete specification, certified dimensions, and description of physical appearance for each item and option submitted. Reproduction of catalog data sheets shall be clean and legible to show all details, including gauge of metal used.

D. Include only information on exact equipment to be installed, not general catalogs of the manufacturer. Where sheets show proposed equipment as well as other equipment, identify proposed equipment with rubber stamp arrow or similar concise method.

E. Submit with each copy a transmittal letter verifying that all included equipment submittals have been carefully considered for quality, dimensions, function, and have been coordinated with the Drawings and Specifications. Guarantee that proposed materials will meet or exceed the quality and function of those specified.

F. Include field wiring diagrams and connection diagrams for all control and/or low voltage systems, including floor plans.

G. Submittal Review: The submittal review process is a means to provide quality control. The action noted to be taken (or where conflicts with the contract documents are not noted) shall not be interpreted by the Contractor as automatic "change orders." Approval of the data for

substitution and shop drawings shall not eliminate the contractor's responsibility for compliance with Drawings or Specifications, nor shall it eliminate the responsibility for freedom from errors of any sort in the data discovered prior to or after the review process. Deviations, discrepancies, and conflicts between the submittals and the Contract Documents shall be called to the Architect's attention in writing at the time of transmittal of the data.

H. Submittals shall be in the form of PDF documents. Arrange submittals numerically with specification sections identified in tabs. All required sections shall be submitted at one time. **Partial submittals will be rejected without review.**

1.6 PRODUCT SUBSTITUTION

A. Materials other than those specified may be approved for this project providing a written request is submitted to the Architect prior to bid in accordance with Instructions to Bidders. Requests shall include complete specifications, dimensions, manufacturer and catalog number for each item for which approval is desired. If, in the opinion of the Architect, the material is not complete or if it is not an acceptable substitute, he may reject it. The Architect's evaluation will be based solely on the material submitted.

1.7 CHANGE ORDERS

A. All supplemental cost proposals by the Contractor shall be accompanied by a complete itemized breakdown of labor and materials without exception. At the Architect's request, the contractor's estimating sheets for the supplemental cost proposals shall be made available to the Architect. Labor must be separated and allocated for each item of work.

1.8 RECORD DOCUMENTS

A. Project Record (As-Installed) Drawings:

1. Maintain a set of record drawings on the job site as directed in Division 1.
2. Keep Drawings clean, undamaged, and up to date.
3. Record and accurately indicate the following:
   a. Depths, sizes, and locations of all buried and concealed piping dimensioned from permanent building features.
   b. Locations of all valves with assigned tag numbers.
   c. Locations of all fire dampers and other airflow control devices.
   d. Changes, additions, and revisions due to change orders, obstructions, etc. Eradicate extraneous information.
   e. Model numbers of installed equipment.
4. Make Drawings available when requested by Architect for review.
5. Submit as part of the required Project Closeout documents. Final submittal will be in the form of reproducible drawings.
6. Quality of entire set of project record drawings to match the quality of the contract documents; quality to be judged by Architect. Computer-aided design drafting (CADD) shall be used to complete project record drawings. Use standards set in contract documents. Note field modifications, all addenda, and change order items on project record drawings. If deficiencies are found in either the quality or the accuracy of the drawings, they will be returned unapproved. Additional review of subsequent

submissions shall be at the contractor's expense.

B. Operating and Maintenance Manuals: Submit Operating and Maintenance Instructions, including manufacturer's service data, wiring diagrams, and parts lists and vendors for all serviceable items of equipment, valve charts, balancing data, final control diagrams showing final set points, duct and piping pressure test reports, equipment startup records, and any additional equipment added by change order. Provide any performance curves, data, and model numbers from submittals. Comply with provisions of Division one where applicable to the mechanical work. Submittal shall be in the form of a PDF file per specification section. Arrange submittals numerically with equipment type or classification identified in tabs. Manufactures O&M manuals shall be provided as a single PDF file that can be hyper-linked by Owner for reference. O&M manuals that are a series of PDF files will not be accepted.

1.9 WARRANTY

A. Furnish, prior to application for final payment, three copies of written and signed guarantee effective a period of one year from date of completion and acceptance of entire project; agree to correct, repair and/or replace defective materials and/or equipment or the results of defective workmanship without additional expense to the Owner. Where no response satisfactory to the Owner has occurred within three working days from the written report of a warranty covered defect, the contractor shall agree to pay for the cost of repair of the reported defect by a contractor of the Owner's choice.

B. Where the manufacturer's guarantee exceeds one year, the longer guarantee shall govern and include the Contractor's labor.

PART 2 - PRODUCTS

2.1 GENERAL

A. General: Provide all new materials and equipment, identical to apparatus or equipment in successful operation for a minimum of two years. Provide materials of comparable quality omitted here but necessary to complete the work. Maximum allowable variation from stated capacities, minus 5% to plus 10% as approved in each case.

B. Compatibility: Provide products which are compatible with other portions of the work and provide products with the proper or correct power and fuel-burning characteristics, and similar adaptations for the project.

C. Efficiency: Heating and cooling equipment shall comply with ASHRAE Standard 90.1-2016 and the State Energy Code. Where equipment efficiencies are indicated, the use of alternate or substitute manufacturer's equipment with lower efficiencies is not permitted.

D. Storage and Handling:

1. Delivery: Deliver to project site with manufacturer's labels intact and legible.
2. Handling: Avoid damage.
3. Storage: Inside protected from weather, dirt and construction dust. Where necessary to

store outside, elevate well above grade and enclose with durable, waterproof wrapping.

2.2 ACCESS PANELS

A. Manufacturers: Inryco/Milcor, Bilco, Elmdor, Karp, Potter-Roemer or accepted substitute. Inryco/Milcor Style DW, K, or M panels as required by construction.

B. Construction: Flush style, fire rated in fire rated partitions and ceilings. Provide flush key cylinder locks on all access panels less than 8' above the floor in public spaces. Turn keys over to Owner at project completion. Screwdriver latches on all others.

2.3 EXPANSION JOINTS AND LOOPS

A. Flexible Expansion/Seismic Loop: Factory fabricated assembly consisting of two 90 degree elbows, two lengths of flexible hose, and a 180 degree return bend to allow free movement in three axis. Return bend shall include attachment point for support and a drain/vent fitting. Hose shall be corrugated metal style with metal overbraid. Connections to match piping system except connection 2” and larger shall be flanged style. Metraflex “Metraloop.”

2.4 METERS AND GAUGES

A. General: Install meters and gauges where shown on the plans or specified elsewhere in these specifications.

B. Pressure-Temperature Test Plugs:

1. ¼” or ½” NPT fitting of solid brass capable of receiving either an 1/8” OD pressure or temperature probe and rated for zero leakage from vacuum to 1000 psig. Neoprene valve core for temperatures to 200 deg. F., Nordel to 350 deg. F.
2. Provide for each test plug a pressure gauge adapter with 1/16” or 1/8” OD pressure probe.
3. Furnish a test kit containing one 2-1/2” dial pressure test gauge of suitable range, one gauge adapter with 1/16” or 1/8” OD probe and two 5” stem pocket test thermometers – one 0 to 220 degrees F and one 50 to 550 degrees F. Turn the kit over to the Architect.
4. Cisco “P/T Plugs,” Peterson “Pete’s Plug” or approved substitute.

C. Thermometers: Liquid-in-glass, adjustable stem, separable sockets, plus 40 to 240 degrees F range (unless indicated otherwise). Weiss numbers are listed. Equivalent Taylor, Trerice, Weksler or approved substitute.

1. Wide case (9”) in equipment rooms and all major equipment items. Weiss “9VS” series.
2. Narrow case (7”) in all other locations. Weiss “7VS” series.

D. Pressure Gauges: Install on suction and discharge of all pumps and where shown on Drawings 4-1/2” dial, 0-100 psig graduation pressure gauges with Ashcroft No. 1106 pulsation dampers and stop cocks. Weiss UGE-1 or equivalent Ashcroft, Marsh, Trerice, Weksler.

2.5 VALVES

A. General: Provide factory fabricated valves of the type, body material, temperature and pressure class, and service indicated. Bronze gate, globe and check valves shall comply with MSS-SP-

80. Ball valves shall comply with MSS-SP-110. Iron gate and globe valves shall comply with MSS-SP-70. Iron check valves shall comply with MSS-SP-71. Butterfly valves shall comply with MSS-SP-67. Valve size same as connecting pipe size.

B. Acceptable Manufacturers: Milwaukee, Crane, Grinnell, Nibco, Hammond, Stockham, Legend, Watts, and Walworth. Grooved end valves Victaulic, Gruvlock, or accepted substitute. NIBCO numbers are given except as noted. Where possible, provide valves from a single manufacturer.

C. Valve Styles: See individual Division 23 sections for valve styles.

D. Butterfly Valve Operators: Locking lever for shut-off service; “Memory Stop” for lever handle with 10-position throttling plate for throttling service; gear operator with babbitt sprocket rim for chain-operated valves and gear operators on all 8” or larger valves.

E. Butterfly Valve Style: Lug-type with cap screws for all valves utilized for equipment isolation for servicing. Lug and grooved style valves shall be capable for use as isolation valves and recommended by manufacturer for dead-end service at full system pressure.

F. Insulated Valves: Install extended-stem valves in all piping specified as insulated, and arrange in the proper manner to receive insulation.

G. Selection of Valve Ends (Pipe Connections): Select and install valves with ends matching the types of pipe/tube connections.

2.6 HANGERS AND SUPPORTS

A. General: Provide factory-fabricated horizontal piping hangers, clamps, hanger rod, inserts, supports, etc., of the indicated MSS type and size. The Manufacturers Standardization Society (MSS) of the Valve and Fittings Industry Practice SP-58 and SP-69 are referenced in this section.

B. Manufacturers: B-Line, Carpenter & Paterson, Grinnell, Michigan, Superstrut, Tolco, Erico, or accepted substitute. Grinnell figure numbers in parentheses where applicable (or other manufacturers as noted).

C. Corrosion Protection: Provide materials which are zinc plated or factory painted to prevent corrosion. Prevent electrolysis in the support of copper tubing by the use of hangers and supports which are copper plated, plastic coated, or by other recognized industry methods.

D. Seismic Requirements: Provide seismic restraints in accordance with OSSC Section 1613. Design restraint systems in accordance with "Seismic Restraint Manual: Guidelines for Mechanical Systems," Second Edition, 1998, SMACNA, or “A Practical Guide to Seismic Restraint” ASHRAE RP-812, 1999.

E. Horizontal Piping Hangers and Supports:

1. Adjustable Clevis Hanger: MSS Type 1 (Fig. 260).
2. Adjustable Band Hanger: MSS Type 7 (Fig. 97), fabricated from steel.

3. Adjustable Swivel-Band Hanger: MSS Type 10 (Fig. 70).
4. Clamp: MSS Type 4 (Fig. 212, 216).
5. Double-Bolt Clamp: MSS Type 3 (Fig. 295A, 295H), including pipe spacers.
6. Adjustable Saddle-Support: MSS Type 36 (Fig. 258) and MSS Type 37 (Fig. 259), including saddle, pipe and reducer. Fabricate base-support from steel pipe and include cast-iron flange or welded-steel plate.
7. Channel Support System: Galvanized, 12 gauge channel and bracket support systems, single or double channel as indicated on the Drawings or as required by piping and equipment weights. Grinnell "Power Strut" channel. Acceptable Manufacturers: Super Strut, Globestrut, Bee, Kindorf or Unistrut.

F. Vertical Pipe Clamps:

1. Two-Bolt Riser Clamp: MSS Type 8 (Fig. 261).
2. Four-Bolt Riser Clamp: MSS Type 42 include pipe spacers at inner bolt-holes.

G. Hanger Attachment:

1. Hanger Rod: Rolled threads, zinc plated. Right hand threaded.
2. Turnbuckles: MSS Type 13 (Fig. 230).
3. Weldless Eye-Nut: MSS Type 17 (Fig. 290).
4. Malleable Eye-Socket: MSS Type 16 (Fig. 110R).
5. Clevises: MSS Type 14 (Fig. 299).

H. Building Attachments:

1. Concrete Inserts: MSS Type 18 (Fig. 282), steel or Grinnell Power-Strut PS349 continuous channel. Acceptable Manufacturers: Michigan Hanger, Globestrut, Unistrut, Super Strut.
2. Clamps: MSS Type 19 (Fig. 285, 281), Type 20, 21 (Fig. 225, 226, 131), Type 23 (Fig. 86, 87, 88), Type 25 (Fig. 227), Type 27 through 30 where applicable.

2.7 IDENTIFICATION MARKERS

A. Pipe Markers:

1. Adhesive pipe markers of width, letter size and background color conforming to ANSI A13.1.
2. Acceptable Manufacturers: Brady B946 with arrow banding tape or similar Seaton, Zeston, MSI.

B. Duct Markers:

1. Adhesive duct markers 2¼”x14” with black text indicating contents on white background with directional flow arrow.
2. Acceptable Manufacturers: Brady B946 or similar Seaton, Zeston, MSI.

C. Nameplates:

1. Engraved nameplates, 1/16" thick, laminated 2-ply plastic, bottom ply white, outer ply black, letters formed by exposing bottom ply.
2. Size: 2" by 4" nameplates with 1/4" high letters.

D. Valve Tags:

1. 2" diameter, 18-gauge polished brass tags with 3/16" chain hole and 1/4" high stamped, black-filled service designation.
2. Acceptable Manufacturers: Seaton, Brady, MSI.

2.8 PENETRATION FIRE STOPPING

A. Through-penetration fire stopping system tested and listed by Underwriters Laboratories. 3M, Metacaulk, SpecSeal, or approved.

B. Select system for proper application based on wall construction, type of penetrating item, wall rating, etc.

C. Sealants and Primers – General: Provide only products having lower volatile organic compound (VOC) content than required by South Coast Air Quality Management District Rule No. 1168.

PART 3 - EXECUTION

3.1 LAYOUT AND COORDINATION

A. Site Examination: Before starting work, carefully examine site and all contract Drawings. Become thoroughly familiar with conditions governing work on this project. Verify all indicated elevations, building measurements, roughing-in dimensions and equipment locations before proceeding with any of the work.

B. Utility Locations: The location of existing utilities, wires, conduits, pipes, ducts, or other service facilities are shown in a general way only on the Drawings and are taken from existing records. Ascertain whether any additional facilities other than those shown on the plans may be present and determine the exact location and elevations of all utilities prior to commencing installation.

C. Coordination:

1. The drawings are based on equipment of a certain manufacturer and may be identified as such. Where alternate manufacturers or approved substitutes are incorporated into the work, any required design changes are the responsibility of the contractor. Such changes may include changes in utility or system connection sizes, location, or orientation, service clearances, structural support or acoustic considerations.
2. Prepare accurate AutoCAD shop drawings showing the actual physical dimensions required for the installation for duct work, piping and mechanical devices. Submit drawings prior to purchase/fabrication/installation of any of the elements involved in the coordination. Provide drawing files to other trades for coordination.

3. Cooperate with other trades in furnishing material and information for sleeves, bucks, chases, mountings, backing, foundations and wiring required for installation of mechanical items.
4. Coordinate all work with other trades and determine in advance where interfacing of the mechanical work and other work are required to be connected together. Provide all materials and equipment to make those connections. Submit shop drawings showing required connections where special conditions exist.

D. Discrepancies: Report immediately any error, conflict or discrepancy in Plans, Specifications and/or existing conditions. Do not proceed with any questionable items of work until clarification of same has been made. Should rearrangement or re-routing of piping be necessary, provide for approval the simplest layout possible for that particular portion of the work.

3.2 UTILITY COORDINATION

A. Utility Coordination: Coordinate all aspects of the incoming utility services indicated with the city Engineer, serving utility, and the off-street improvements contractor. Requirements of the utility company which exceed the provisions made on the Drawings or covered by these Specifications shall take precedence. Provisions made on the Drawings or Specifications in excess of the utility company's requirements shall take precedence. No additional compensation will be allowed the contractor for connection fees or additional work or equipment not covered in the Drawings or Specifications which are a result of policies of the serving utilities.

3.3 MECHANICAL EQUIPMENT WIRING

A. Provide all mechanical equipment motors, automatic temperature, limit, float and similar control devices required, with wiring complete from power source indicated on Electrical Drawings.

B. Provide properly rated motor overload and undervoltage protection and all manual or automatic motor operating devices for all mechanical equipment.

C. Equipment and systems shown on the Drawings and/or specified, are based upon requirements of specific manufacturers which are intended as somewhat typical of several makes which may be approved. Provide all field wiring and/or devices necessary for a complete and operable system including controls for the actual selected equipment/system.

D. Provide all starters for mechanical motors. Review Electrical Specifications and Drawings to determine starter sizes. Adjust fusing/time delay on all starters once installed.

3.4 GENERAL INSTALLATION

A. Locating and Positioning Equipment: Observe all Codes, Regulations and good common practice in locating and installing mechanical equipment and material so that completed installation presents the least possible hazard. Maintain adequate clearances for repair and service to all equipment and comply with Code requirements.

B. Arrangement: Arrange piping parallel with primary lines of the building construction, and with a minimum of 7' overhead clearance in all areas where possible. Unless indicated otherwise,

conceal all piping. Locate operating and control equipment properly to provide easy access, and arrange entire mechanical work with adequate access for operation and maintenance. Give right-of-way to piping which must slope for drainage. Set all equipment level or as recommended by manufacturer. Under no conditions shall beams, girders, footings or columns be cut for mechanical items. Casting of pipes into concrete is prohibited unless so shown on Drawings.

C. Drip Pans: Provide drip pans under all above ceiling in-line pumps and cooling coils. Locate pan immediately below piping and equipment, and extend a minimum of 6" on each side and lengthwise 18" beyond equipment being protected. Fabricate pans 2" deep, of reinforced 20 gauge galvanized sheet metal with watertight seams and rolled or hemmed edges. Provide 3/4" drainage piping, properly discharged to over floor drain or as shown on the Drawings. Comply with Mechanical Code for overflow protection and pipe sizing.

D. Access Panels: Provide access panels with proper backing reinforcement for all equipment, dielectric unions, valves and items requiring service and installed above ceilings, behind walls, or in furring, complete with correct frame for type of building construction involved. Exact size, number and location of access panels are not necessarily shown on Drawings. Use no panel smaller than 12" by 12" for simple manual access or smaller than 16" x 20" where personnel must pass through.

E. Adjusting: Adjust and calibrate all automatic mechanical equipment, temperature controls, float devices, etc. Adjust flow rates at each piece of equipment or fixture.

F. Building Vapor Barrier: Wherever the building insulation vapor barrier is penetrated by piping, hangers, conduits, etc., provide clear self-adhesive tape recommended by the insulation manufacturer around the penetrations.

3.5 VALVE INSTALLATION

A. General: Comply with the following requirements:

1. Install valves where required for proper operation of piping and isolation of equipment, including valves in branch lines where necessary to isolate sections of piping, and where shown on the drawings. Install valves at low points in piping systems that must be drained for service or freeze protection.
2. Locate valves in accessible spaces (or behind access panels) and so that separate support can be provided when necessary.
3. Install valves with stems pointed up, in the vertical position where possible, but in no case with stems pointed downward from a horizontal plane.

B. Insulated Valves: Install extended-stem valves in all piping specified as insulated, and arrange in the proper manner to receive insulation.

C. Valve Access: Provide access panels to all valves installed behind walls, in furring or otherwise inaccessible.

3.6 INSTALLATION OF HANGERS AND SUPPORTS

A. General: Proceed with the installation of hangers, supports and anchors only after the required building structural work has been completed in areas where the work is to be installed. Correct inadequacies including (but not limited to) the proper placement of inserts, anchors and other building structural attachments.

1. Install hangers, supports, clamps, and attachments to support piping and equipment properly from the building structure. Use no wire or perforated metal to support piping, and no supports from other piping or equipment. For exposed continuous pipe runs, install hangers and supports of the same type and style as installed for adjacent similar piping.
2. Prevent electrolysis in the support of copper tubing by the use of hangers and supports which are copper plated or by other recognized industry methods.
3. Arrange supports to prevent eccentric loading of joists and joist girders. Locate supports at panel points only.

B. Provisions for Movement:

1. Install hangers and supports to allow controlled movement of piping systems and to permit freedom of movement between pipe anchors, and to facilitate the action of expansion joints, expansion loops, expansion bends and similar units. Install specified seismic restraints to restrict excessive movement.
2. Install hangers and supports so that equipment and piping live and dead loading and stresses from movement will not be transmitted to connected equipment.
3. Install hangers and supports to provide the indicated pipe slopes, and so that maximum pipe deflections allowed by ANSI B31 are not exceeded. Comply with the following installation requirements:
   a. Clamps: Attach clamps, including spacers (if any), to piping outside the insulated piping support. Do not exceed pipe stresses allowed by ANSI B31.
   b. Insulated Pipe Supports: Insulated pipe supports shall be supplied and installed on all insulated pipe and tubing.
   c. Load Rating: All insulated pipe supports shall be load rated by the manufacturer based upon testing and analysis in conformance with ASME B31.1, MSS SP-58, MSS SP-69 and MSS SP-89.
   d. Support Type: Manufacturer's recommendations, hanger style and load shall determine support type.
   e. Insulated Piping Supports: Where insulated piping with continuous vapor barrier or where exposed to view in finished areas is specified, install hard maple wood insulation shields (Elcen Fig. 216) or steel pipe covering protection shields (MSS type 39) at each hanger.

C. Pipe Support:

1. Vertical Spacing: Support at base, at equivalent of every floor height (maximum 10' as required by Code) and just below roof line.
2. Screwed or Welded Steel or Copper Piping: Maximum hanger spacing shall be as follows:

	Steel	Copper
1-1/4" and smaller	7' span	6' span
1-1/2" pipe	9' span	6' span

2" pipe	10' span	10' span
2-1/2" & larger	12' span	10' span

3. Install additional hangers or supports at concentrated loads such as pumps, valves, etc. to maintain alignment and prevent sagging.
4. Support Rod: Hanger support rods sized as follows:

Pipe and Tube Size		Rod Size	
Inches	mm	Inches	mm
1/2” to 4”	12.7 to 101.6	3/8”	9.5
5” to 8”	127.0 to 203.2	1/2”	12.7
10” to 12”	254.0 to 304.8	5/8”	15.9

D. Adjust hangers and supports to bring piping to proper levels and elevations.

E. Provide all necessary structural attachments such as anchors, beam clamps, hanger flanges and brackets in accordance with MSS SP-69. Attachments to beams wherever possible. Supports suspended from other piping, equipment, metal decking, etc., are not acceptable.

F. Horizontal banks of piping may be supported on common steel channel member spaced not more than the shortest allowable span required on the individual pipe. Maintain piping at its relative lateral position using clamps or clips. Allow lines subject to thermal expansion to roll axially or slide. Size channel struts for piping weights.

G. Installation of drilled-in concrete anchors shall comply with the manufacturer’s instructions for working load, depth of embedment, and spacing between anchors and from the edge of the slab. Use only wedge-style anchors.

H. Seismic Restraints: Install restraints where recommended in SMACNA "Seismic Restraint Manual" and as required by code. Show analysis of supporting structure, anchorages, and restraints in accordance with OSSC Section 16 and reference ASCE standard. Seismic restraint system components shall be approved by the California Office of Statewide Health Planning and Development (OSHPD). Acceptable Manufacturers: Amber/Booth, Mason Industries, Tolco, or approved. Contractor shall submit calculations and shop drawings, sealed and signed by a professional Engineer, showing seismic restraint design for all equipment, piping and ductwork required to be braced.

I. Anchor Design: Contractor shall submit calculations and shop drawings, sealed and signed by a professional Engineer, showing attachments to structure and equipment for all equipment weighing 400 lbs or more and for all suspended devices weighing more than 75 lbs. Seismic importance factor is 1.0.

J. Ensure all copper piping is protected from contact with non-copper supports. Provide strut cushion below clamp or 2 layers of UPC listed 10 mil tape.

3.7 HVAC SYSTEM IDENTIFICATION

A. Piping System: Indicate each pipe system by its generic name (abbreviated) as shown/scheduled/specified. Comply with ANSI A13.1 for marker locations, letter sizes, and

colors. Include arrows to show direction of flow and "Electric Traced" signs to identify heat cable wrapped piping. Locate pipe labels in accessible areas as follows:

1. Near each valve, meter, gauge, or control device.
2. Near equipment such as pumps, heat exchangers, water heaters, etc.
3. At piping branch connections.
4. At penetrations (each side) of walls, ceilings, and floors.
5. At access panels and doors.
6. At 25 foot maximum intervals. Provide a minimum of one label above each room where lift-out ceiling is installed. Reduce intervals in congested areas such as mechanical rooms.

B. Valve Identification: Tag all valves with brass disc and chain. Prepare valve charts indicating valve number, size, location, function and normal position. Use no duplicate numbers in Plumbing and Heating systems. Mount glazed frames containing one set of valve charts in the building mechanical room.

C. Equipment: Provide engraved plastic-laminate signs at locations of major equipment such as heat exchangers, pumps, etc. Identify equipment in field same as on drawings. Permanently mount in an appropriate and effective location.

D. Operation Tags: Where needed for proper and adequate information on operation and maintenance of mechanical systems, provide tags of plasticized card stock, either pre-printed or hand printed to convey the message; example: "DO NOT CLOSE THIS VALVE EXCEPT WHEN THE PUMP IS OFF."

3.8 EQUIPMENT CONNECTIONS

A. Provide complete connections for all items of equipment requiring such connections, including incidental piping, fittings, trim and labor necessary for a finished working installation.

B. Verify the rough-in and finish requirements for all equipment provided under other Divisions of the work and requiring HVAC piping or duct connections with equipment supplier and installer prior to rough-in.

3.9 PROTECTION

A. Protect all work and materials against loss or damage. Close all pipe openings with caps or plugs. At final completion, thoroughly clean and deliver all work and equipment in an unblemished new condition. Keep all motors and bearings in watertight and dustproof covers during entire course of installation.

B. Protect floors, walls, framing and sheathing where pipe cutting and threading operations are conducted with plastic sheeting under plywood sheets. Extend plastic sheeting beyond the plywood. Clean-up metal cuttings, oil, etc., daily or as necessary to prevent debris from being tracked beyond the protected area. Damages, as determined by the Architect, due to the pipe cutting/threading operation shall be repaired by the responsible trade.

3.10 CUTTING AND PATCHING

A. General: Comply with the requirements of Division 1 for the cutting and patching of other work to accommodate the installation of mechanical work. Do all necessary cutting and patching of existing building and yard surfaces required for completion of the mechanical work. Patch to match finish and color of adjacent surfaces. Coordinate work in remodel and new areas to avoid cutting of new finished surfaces.

3.11 PIPE PENETRATION FIRE STOPPING

A. Install as recommended by manufacturer and in accordance with the product's UL listing. Below are the minimum installation requirements.

1. Install specified penetrating item(s) with required annular spacing in proper size wall or floor opening. Support penetrating item(s) adequately on both sides of construction.
2. Clean all opening and penetrating item surfaces in penetration area to remove loose debris, dirt, oil, wax, grease, old caulking, etc.
3. If needed or required for gypsum or concrete block walls, install specified galvanized steel wire mesh or sleeve recessed and centered inside wall around penetrating item(s) so that it is snug against perimeter of opening.
4. When required, install specified type and depth of backing material in annular space, recessed to required fill depth of fire stopping caulking.
5. Gun, trowel, and/or pump fire stopping sealant to specified depth in annular space around penetrating item(s). Trowel sealant surfaces flush with wall or floor surfaces to a smooth, defect-free finish. Where required, apply specified size caulking bead around penetrating item(s) at zero annular contact areas and tool smooth.

B. Drawings show some, not all, of the penetration. Review architectural drawings for all fire walls.

C. Sealants and Primers – General: Provide only products having lower volatile organic compound (VOC) content than required by South Coast Air Quality Management District Rule No. 1168.

3.12 MECHANICAL PAINTING

A. Minimum Requirements: Comply with minimum requirements of Division 9, Painting**.** All mechanical equipment, piping, insulation, etc., exposed in finished areas, storage rooms and other locations except mechanical equipment rooms will be painted under Section 09 90 00.

3.13 HVAC WORK CLOSEOUT

A. General: Refer to the Division 1 sections for general closeout requirements. Calibrate all equipment requiring same. Complete each system as shown or specified herein and place in operation except where only roughing-in or partial systems are called for. Each system shall be tested and left in proper operation free of leaks, obstructions, or contamination.

B. Record Drawings: Submit record set of drawings required in Division 1 as previously specified in this Section.

C. Closeout Equipment/Systems Operations: Sequence operations properly so that work of project will not be damaged or endangered. Coordinate with seasonal requirements. Operate each item

of equipment and each system in a test run of appropriate duration with the Architect present, and with the Owner's operating personnel present, to demonstrate sustained, satisfactory performance. Adjust and correct operations as required for proper performance. Clean and lubricate each system and replace dirty filters, excessively worn parts and similar expendable items of the work.

D. Operating Instructions: Conduct a walk-through instruction seminar for the Owner's personnel who are to be involved in the continued operation and maintenance of the HVAC equipment and systems. Provide written instructions outlining and explaining the identification system, operational diagrams, emergency and alarm provisions, sequencing requirements, seasonal provisions, security, safety, efficiency and similar features of the systems.

END OF SECTION 230500

SECTION 230548 – SEISMIC CONTROLS FOR HVAC PIPING AND EQUIPMENT

PART 1 - GENERAL

1.1 RELATED DOCUMENTS

A. Drawings and general provisions of the Contract, including General and Supplementary Conditions and Division 01, General Requirements Specification Sections, apply to this Section.

B. The provisions of Division 23, Heating, Ventilation and Air Conditioning (HVAC) Section 230500, Common Work Results for HVAC, apply to work specified in this Section.

1.2 SUMMARY

A. Seismic restraint of equipment, piping, and ductwork.

1.3 RELATED SECTIONS

A. Division 01, General Requirements

B. Section 230500, HVAC Materials and Methods

C. Section 232100, Hydronic Piping and Pumps

D. Section 233000, Air Distribution

E. Section 233400, HVAC Fans

1.4 QUALITY ASSURANCE

A. Single manufacturer select and furnish isolation required, except packaged equipment with integral isolators meeting all the isolation and seismic requirements of this Specification.

B. System of vibration isolators and seismic controls designed, detailed, and bear the seal of a professional Engineer registered in the State having jurisdiction.

C. Isolation performance requirements are indicated in the specifications. Deflections indicated are nominal static deflections for specific equipment supported.

D. Isolator Stability and Rated Capacity:

1. Spring diameters not less than 0.8 of the compressed height of the spring at rated load.
2. Springs have a minimum additional travel to solid equal to 50 percent of the rated deflection.

E. Seismic Restraints:

1. Restraint of equipment, piping, and ductwork to be in accordance with the current state and local Building Code.

2. Calculations in accordance with current state and local Building Code.

1.5 SUBMITTALS

A. Submit the following:

1. Submit Shop Drawings showing complete details of construction for steel and concrete bases including:
   a. Equipment mounting holes.
   b. Dimensions
   c. Isolation selected for each support point.
   d. Details of mounting brackets for isolator.
   e. Weight distribution for each isolator.
   f. Code number assigned to each isolator.
2. Submit product data and calculation sheets for isolators, showing:
   a. Size, type, load rating, and rated deflection of each required isolator.
   b. Percent of vibration transmitted based on the lowest disturbing frequency of the equipment.
3. Structural Details and Calculations substantiating that building structure, anchorages, and fabricated steel braces can safely withstand maximum calculated loads stamped and signed by a registered structural Engineer.
4. Installation report as specified in PART 3 of this Section.
5. Operation and maintenance data.

1.6 CONTRACTOR RESPONSIBILITY

A. Adequately restrain all equipment, piping, and ductwork to resist seismic forces. Design and select restraint devices to meet seismic requirements as defined in the latest issue of the International Building Code under Earthquake Loads and applicable state and local codes.

PART 2 - PRODUCTS

2.1 MANUFACTURERS

A. Approved Manufacturers: Where Mason is listed, Kinetics Noise Control, Vibrex, or Amber-Booth is approved.

2.2 SEISMIC RESTRAINTS

A. General Requirements:

1. Provided for equipment, piping and ductwork, both supported and suspended.
2. Bracing of piping shall be in accordance with state and local code requirements and ASCE 7 Seismic Design Requirements for Nonstructural Components, whichever is most stringent.
3. Bracing of ductwork shall be in accordance with the state and local code requirements, ASCE 7 Seismic Design Requirements for Nonstructural Components, and with the provisions set forth in the SMACNA seismic restraint manual.
4. Attachments to supported or suspended equipment must be coordinated with the

equipment manufacturer.

B. Supported Equipment:

1. All-directional Seismic Rubbers: Interlocking steel members restrained by a one-piece molded neoprene bushing of bridge bearing neoprene.
2. Replaceable bushing and minimum of 1/4-inch thick. Rated loadings not to exceed 1000 psi.
3. An air gap of 1/4-inch shall be incorporated in the snubber design in all directions before contact is made between the rigid and resilient surfaces.
4. Snubber End Caps:
   a. Removable to allow inspection of internal clearances.
   b. Rotated neoprene bushings be rotated to ensure no short circuits exist before systems are activated.
5. Snubber: Mason Industries, Inc. Type Z-1225.

C. Bracing of Pipes:

1. Provide seismic bracing of piping as detailed below to meet the building code requirements:
   a. Exception: Piping suspended by individual hangers need not be braced where the following criteria are met.
      1) Distance between the top of the pipe to the bottom of the support structure is 12-inches or less.
      2) Seismic braces are not required on high deformability piping when the Ip=1.0 and provisions are made to avoid impact with larger pipe or mechanical components or to protect the pipe in the event of such impact and the nominal pipe size is 3-inch diameter or less.
      3) Seismic braces are not required on high deformability piping when the Ip=1.5 or less and provisions are made to avoid impact with larger pipe or mechanical components or to protect the pipe in the event of such impact and the nominal pipe size is 1-inch diameter or less.
2. Seismic braces for pipes on trapeze hangers may be used.
3. Provide flexibility in joints where pipes pass through building seismic joints or expansion joints, or where pipes connect to equipment.
4. Cast iron pipe of all types, glass pipe, and any other pipe joined with a shield and clamp assembly, where the top of the pipe is 12-inches or more from the supporting structure, shall be braced on each side of a change in direction of 90 degrees or more. Riser joints on unsupported sections of piping shall be braced or stabilized between floors.
5. Vertical risers shall be laterally supported with a riser clamp at each floor. For buildings greater than six stories high or for piping subject to thermal change all risers shall be engineered individually.

D. Bracing of Ductwork:

1. Brace rectangular ducts with cross sectional areas of 6 square feet and larger. Brace flat oval ducts in the same manner as rectangular ducts. Brace round ducts with diameters of 28-inches and larger. Brace flat oval ducts the same as rectangular ducts of the same nominal size.

2. Exception: No bracing is required if the duct is suspended by hangers 12-inches or less in length, as measured from the top of the duct to the bottom of the support where the hanger is attached.
3. Transverse bracing shall occur at the interval specified in the SMACNA tables or at both ends if the duct run is less than the specified interval. Transverse bracing shall be installed at each duct turn and at each end of a duct run, with a minimum of one brace at each end.
4. Longitudinal bracing shall occur at the interval specified in the SMACNA tables with at least one brace per duct run. Transverse bracing for one duct section may also act as longitudinal bracing for a duct section connected perpendicular to it if the bracing is installed within four feet of the intersection of the ducts and if the bracing is sized for the larger duct. Duct joints shall conform to SMACNA duct construction standards.
5. Install duct flex connections at equipment connections to accept expected differential displacement and protect the equipment connection from damage.

E. Suspended Equipment and Piping and Ductwork:

1. Seismic cable restraints shall consist of galvanized steel aircraft cables sized to resist seismic loads with a minimum safety factor of two and arranged to provide all-directional restraint.
2. Cable must be pre-stretched to achieve a certified minimum modulus of elasticity. Cable end connections shall be steel assemblies that swivel to final installation angle and utilize two clamping bolts to provide proper cable engagement.
3. Cable assemblies shall be type SCB at the ceiling and at the clevis bolt, SCBH between the hanger rod and the clevis or SCBV if clamped to a beam, all as manufactured by Mason Industries, Inc.
4. Steel angles or strut, sized to prevent buckling, shall be clamped to pipe or equipment rods utilizing a minimum of three ductile iron clamps at each restraint location when required. Welding of a minimum of three ductile iron clamps at each restraint location when required. Welding of support rods is not acceptable. Rod clamp assemblies shall be type SRC or UCC as manufactured by Mason Industries, Inc.
5. Pipe clevis cross-bolt braces are required in all restraint locations. They shall be special purpose preformed channels deep enough to be held in place by bolts passing over the cross bolt. Clevis cross brace shall be type CCB as manufactured by Mason Industries, Inc.

PART 3 - EXECUTION

3.1 GENERAL

A. Correct, at no additional cost, all installations which are defective in workmanship or materials.

3.2 PREPARATION

A. Treat all isolators, including springs, hardware, and housing, with a corrosion protective coating of epoxy powder or electro galvanizing.

B. Coat steel frames exposed to weather with a rustproof metal primer.

C. Provide hot dipped galvanizing on steel frames as indicated on the plans for corrosion protection in severe conditions.

3.3 SEISMIC RESTRAINTS

A. General:

1. Install and adjust seismic restraints so that the equipment, piping, and ductwork support is not degraded by the restraints.
2. Restraints must not short circuit vibration isolation systems or transmit objectionable vibration or noise.

B. Supported Equipment:

1. Each vibration isolation frame for supported equipment shall have a minimum of four seismic snubbers mounted as close as possible to the vibration isolators and/or the frame extremities.
2. Care must be taken so that the 1/4-inch air gap in the seismic restraint snubber is preserved on all sides in order that the vibration isolation potential of the isolator is not compromised. This requires that the final snubber adjustment be completed after the vibration isolators are properly installed and the installation approved.

C. Bracing of Pipes:

1. Branch lines may not be used to brace main lines.
2. Transverse bracing shall be at 40-feet maximum, except where a lesser spacing is indicated in the SMACNA Seismic Restraint Manual for bracing of pipes.
3. Longitudinal bracing shall be at 80-feet maximum except where a lesser spacing is indicated in the tables. In pipes where thermal expansion is a consideration, an anchor point may be used as the specified longitudinal brace provided that it has a capacity to resist both the seismic load and the additional force induced by expansion and contraction.
4. Fuel oil, gas, cast iron pipe of all types, glass pipe and any other pipes joined with shield and clamp assembly shall be braced at 1/2 the spacings shown above.
5. A rigid piping system shall not be braced to dissimilar parts of the building or to two dissimilar building systems that may respond differently during an earthquake.
6. Transverse bracing for one pipe section may also act as longitudinal bracing for a pipe section of the same size connected perpendicular to it if the bracing is installed within 24-inches of the elbow or tee.
7. Branch lines may not be used to restrain main lines.
8. Where thermal expansion is a consideration, guides and anchors may be used as transverse and longitudinal restraints provided they have a capacity equal to or greater than the restraint loads in addition to the loads induced by expansion or contraction.
9. Subject to confirmation by field inspection, seismic bracing is not required on piping when the piping is supported by rod hangers and the hangers in the entire run are 12-inches or less in length from the top of the pipe to the supporting structure, hangers are detailed to avoid bending of the hangers and their attachments and provisions are made for piping to accommodate expected deflections.

D. Bracing of Ductwork:

1. Transverse restraints shall occur at 30-foot intervals or at both ends of the duct run if less than the specified interval. Transverse restraints shall be installed at each duct turn and at each end of a duct run.
2. Longitudinal restraints shall occur at 60-foot intervals with at least one restraint per duct run. Transverse restraints for one duct section may also act as a longitudinal restraint for a duct section connected perpendicular to it if the restraints are installed within 4-feet of the intersection of the ducts and if the restraints are sized for the larger duct. Duct joints shall conform to SMACNA duct construction standards.
3. Hanger straps must be positively attached to the duct within 2-inches of the top of the duct with a minimum of two number 10 sheet metal screws.
4. A group of ducts may be combined in a larger frame so that the combined weights and dimensions of the ducts are less than or equal to the maximum weight and dimensions of the duct for which bracing details are selected.
5. Walls, including gypsum board nonbearing partitions, which have ducts running through them, may replace a typical transverse brace. Provide solid blocking around duct penetrations at stud wall construction.
6. Unbraced ducts shall be installed with a 6-inch minimum clearance to vertical ceiling hanger wires.

E. Suspended Equipment, Piping, and Ductwork Cable Method:

1. The uplift and downward restraint nuts and Mason type RW neoprene covered steel rebound washers for the Type 6 hangers adjusted so there is a maximum 1/4-inch clearance.
2. C-clamps for attachment to the bottom of I-beams must incorporate a restraining strap.

3.4 FIELD QUALITY CONTROL

A. Installation Report: Isolation manufacturer's representative shall confirm that all isolation is installed correctly and submit report stating that isolators are installed as shown on Shop Drawings, isolators are free to work properly, and that installed deflections are as scheduled and as specified.

END OF SECTION 230548

SECTION 230590 – TESTING, ADJUSTING AND BALANCING

PART 1 - GENERAL

1.1 DESCRIPTION

A. Work Included: After completion of the work of installation, test and regulate all components of the new heating, air conditioning and ventilating systems to verify air volumes and heating-cooling flow rates indicated on the Drawings.

B. Some of the devices specified along with the means and methods are associated with Alternate #1. Alternate #1 is to install the owner provided boilers and pumps to complete the boiler plant as specified and designed in the contract documents. Under base bid piping is installed into the boiler room for the connection by a contractor or owner concurrent with the base bid work. If Alternate #1 is not accepted the balancer shall wait until the boiler plant installation is complete prior to completing the Hydronic balancing.

C. Balancing Organization:

1. Balancing of the Heating and Air Conditioning Systems: Performed by a firm providing this service established in the State of Oregon.
2. Balancing Organization: Approval by Architect. Air Balancing Specialties, Neudorfer Engineers**,** Northwest Engineering Services, Air Introduction & Regulation, Accurate Balancing Agency.
3. Provide all necessary personnel, equipment, and services.

1.2 QUALITY ASSURANCE

A. Balancing of the Heating and Air Conditioning Systems: Agency shall be a current member of NEBB or AABC specializing in the adjusting and balancing of systems specified with a minimum of 10 years documented experience.

B. Testing, adjusting, and balancing shall be performed under direct field supervision of a Certified NEBB Supervisor or a Certified AABC Supervisor.

1.3 SUBMITTALS

A. See Section in Division 1, Administrative Requirements, for submittal procedures.

B. Submit name of adjusting and balancing agency for approval within 30 days after award of Contract.

C. Field Reports: Indicate deficiencies in systems that would prevent proper testing, adjusting, and balancing of systems and equipment to achieve specified performance.

1. Submit under provisions of Section 230500.
2. Prior to commencing work, submit report forms or outlines indicating adjusting, balancing, and equipment data required.

3. Submit draft copies of report for review prior to final acceptance of Project. Provide final copies for Architect and for inclusion in operating and maintenance manuals.
4. Provide reports in soft cover, letter size, 3-ring binder manuals, complete with index page and indexing tabs, with cover identification at front and side. Include set of reduced drawings with air outlets and equipment identified to correspond with data sheets, and indicating thermostat locations.
5. Include detailed procedures, agenda, sample report forms, and copy of AABC National Project Performance Guaranty or other certifying agency prior to commencing system balance.
6. Test Reports: Indicate data on AABC MN-1 forms, forms prepared following ASHRAE 111, NEBB forms, or forms containing information indicated in Schedules.
7. Include the following on the title page of each report:
   a. Name of testing, adjusting, and balancing agency.
   b. Address of testing, adjusting, and balancing agency.
   c. Telephone number of testing, adjusting, and balancing agency.
   d. Project name.
   e. Project location.
   f. Project Architect and Owner.
   g. Project Engineer.
   h. Project Contractor.
   i. Project altitude.
   j. Report date.

D. Project Record Documents: Record actual locations of flow measuring stations and balancing valves and rough setting.

E. Provide a list of equipment, air supply, return and exhaust, heating water, and chilled water systems not in compliance with tolerances subsequently specified.

PART 2 - PRODUCTS

-- NOT USED --

PART 3 - EXECUTION

3.1 EXAMINATION

A. Verify that systems are complete and operable before commencing work. Ensure the following conditions:

1. Systems are started and operating in a safe and normal condition.
2. Temperature control systems are installed complete and operable.
3. Proper thermal overload protection is in place for electrical equipment.
4. Final filters are clean and in place. If required, install temporary media in addition to final filters.
5. Duct systems are clean of debris.
6. Fans are rotating correctly.

7. Fire and volume dampers are in place and open.
8. Air coil fins are cleaned and combed.
9. Access doors are closed and duct end caps are in place.
10. Air outlets are installed and connected.
11. Duct system leakage is minimized.
12. Hydronic systems are flushed, filled, and vented.
13. Pumps are rotating correctly.
14. Proper strainer baskets are clean and in place.
15. Service and balance valves are open.

B. Submit field reports. Report defects and deficiencies noted during performance of services which prevent system balance.

C. Beginning of work means acceptance of existing conditions.

3.2 INSTALLATION TOLERANCES

A. Air Handling Systems: Adjust to within plus 10 percent or minus 5 percent of design for supply systems and +/- 10 percent of design for return and exhaust systems.

B. Air Outlets and Inlets: Adjust total to within plus 10 percent or minus 5 percent of design to space. Adjust outlets and inlets in space to within +/- 10 percent of design.

C. Hydronic Systems: Adjust to within +/- 10 percent of design.

3.3 ADJUSTING

A. Ensure recorded data represents actual measured or observed conditions.

B. Permanently mark settings of valves, dampers, and other adjustment devices allowing settings to be restored. Set and lock memory stops.

C. After adjustment, take measurements to verify balance has not been disrupted or that such disruption has been rectified.

D. Leave systems in proper working order, replacing belt guards, closing access doors, closing doors to electrical switch boxes, and restoring thermostats to specified settings.

E. At final inspection, recheck random selections of data recorded in report. Recheck points or areas as selected and witnessed by the Owner.

3.4 AIR SYSTEM PROCEDURE

A. Adjust air handling and distribution systems to provide required or design supply, return, and exhaust air quantities.

B. Make air quantity measurements in ducts by Pitot tube traverse of entire cross sectional area of duct.

C. Measure air quantities at air inlets and outlets.

D. Adjust noise distribution system to obtain uniform space temperatures free from objectionable drafts and noise.

E. Use volume control devices to regulate air quantities only to the extent that adjustments do not create objectionable air motion or sound levels. Effect volume control by duct internal devices such as dampers and splitters.

F. Vary total system air quantities by adjustment of fan speeds. Provide drive changes required. Vary branch air quantities by damper regulation.

G. Provide system schematic with required and actual air quantities recorded at each outlet or inlet.

H. Measure static air pressure conditions on air supply units, including filter and coil pressure drops, and total pressure across the fan. Make allowances for 50 percent loading of filters.

I. Adjust outside air automatic dampers, outside air, return air, and exhaust dampers for design conditions.

J. Measure temperature conditions across outside air, return air, and exhaust dampers to check leakage.

K. Where modulating dampers are provided, take measurements and balance at extreme conditions. Balance variable volume systems at maximum air flow rate, full cooling, and at minimum air flow rate, full heating.

L. Measure building static pressure and adjust supply, return, and exhaust air systems to provide required relationship between each to maintain approximately 0.02” (12.5 Pa) positive static pressure near the building entries.

M. For variable air volume system powered units, set volume controller to air flow setting indicated. Confirm connections are properly made and confirm proper operating for automatic variable air volume temperature control. Adjust drives to maximum airflow for highest static condition (maximum amps of motor). Allow VFD to regulate airflow per specification.

N. Space pressure Control, Return Fan Speed Endpoints. For variable air volume system with terminal unit zoning, attain return fan speed control endpoints based on the following values for the given operating mode. Coordinate with the HVAC control contractor for system setup and provide values when determined.

Return Fan Speed Endpoint Values				
Mode	**Supply Fan Speed Hi/Lo Reset Limits**	**Desired Space Pressure (InH2O)**	**Economizer Position**	**Return Fan Speed**
Full Heating (All terminal units are operating at heating flow setpoints)	TBD – Noted during the full heating condition	**Ideal - 0.02** Acceptable Test Range: 0.01 – 0.03	Min-Min (25% of the minimum ventilation requirement)	Minimum Return Fan Speed-TBD

Full Cooling (All terminal units are operating at cooling flow setpoints)	TBD – Noted during the full cooling condition	**Ideal - 0.02** Acceptable Test Range: 0.01 – 0.03	Min-Max (100% of the minimum ventilation requirement)	Maximum Return Fan Speed-TBD

O. CO2 controller set points – minimum CO2 setpoint (ppm), maximum CO2 setpoint (ppm)(setting for min OSA at full occupancy).

P. Outside air intake damper settings at minimum CO_2 and maximum CO_2 setpoint.

3.5 WATER SYSTEM PROCEDURE

A. Adjust water systems to provide required or design quantities. This work to be completed under Phase 2.

B. Use calibrated Venturi tubes, orifices, or other metered fittings and pressure gauges to determine flow rates for system balance. Where flow metering devices are not installed, base flow balance on temperature difference across various heat transfer elements in the system.

C. Adjust systems to provide specified pressure drops and flows through heat transfer elements prior to thermal testing. Perform balancing by measurement of temperature differential in conjunction with air balancing.

D. Effect system balance with automatic control valves fully open to heat transfer elements.

E. Effect adjustment of water distribution systems by means of balancing cocks, valves, and fittings. Do not use service or shut-off valves for balancing unless indexed for balance point.

F. Where available pump capacity is less than total flow requirements or individual system parts, full flow in one part may be simulated by temporary restriction of flow to other parts.

G. Where automatic flow control valves are installed (Dynamic devices, not circuit setters) record listed flow rate of device based on field verification. Testing is not required.

H. Balancing contractor shall be trained on balancing procedures by certified representative of differential pressure control valves.

3.6 SCHEDULES

A. Equipment Requiring Testing, Adjusting, and Balancing:

1. HVAC pumps
2. Air coils
3. Air handling units
4. Fans
5. Air filters
6. Air terminal units
7. Air inlets and outlets

B. Report:

1. Summary Comments:
   a. Design versus final performance
   b. Notable characteristics of system
   c. Description of systems operation sequence
   d. Summary of outdoor and exhaust flows to indicate amount of building pressurization
   e. Nomenclature used throughout report
   f. Test conditions
2. Instrument List:
   a. Instrument
   b. Manufacturer
   c. Model number
   d. Serial number
   e. Range
   f. Calibration date

C. Electric Motors:

1. Manufacturer
2. Model/frame
3. HP/BHP
4. Phase, voltage, amperage; nameplate, actual, no load
5. RPM
6. Service factor
7. Starter size, rating, heater elements
8. Sheave make/size/model

D. V-Belt Drives:

1. Identification/location
2. Required driven RPM
3. Driven sheave, diameter, and RPM
4. Belt, size, and quantity
5. Motor sheave diameter and RPM
6. Center to center distance, maximum, minimum, and tested

E. Pumps:

1. Identification/number
2. Manufacturer
3. Size/model
4. Impeller
5. Service
6. Design flow rate, pressure drop, BHP
7. Actual flow rate, pressure drop, BHP
8. Discharge pressure

9. Suction pressure
10. Total operating head pressure
11. Shut off, discharge, and suction pressure
12. Shut off, total head pressure

F. Refrigerant Cooling Coils:

1. Identification/number
2. Location
3. Service
4. Manufacturer
5. Air flow, design and actual
6. Entering air DB temperature, design and tested
7. Entering air WB temperature, design and tested
8. Leaving air DB temperature, design and tested
9. Leaving air WB temperature, design and tested
10. Air pressure drop, design and tested
11. Saturated suction temperature, design and tested

G. Heating Water Coils:

1. Identification/number
2. Location
3. Service
4. Manufacturer
5. Air flow, design and tested
6. Water flow, design and tested
7. Water pressure drop, design and tested
8. Entering water temperature, design and tested
9. Leaving water temperature, design and tested
10. Entering air temperature, design and tested
11. Leaving air temperature, design and tested
12. Air pressure drop, design and tested

H. Air Moving Equipment:

1. Location
2. Manufacturer
3. Model number
4. Serial number
5. Arrangement/Class/Discharge
6. Air flow, specified and tested
7. Return air flow, specified and tested
8. Outside air flow, specified and tested
9. Total static pressure (total external), specified and tested
10. Inlet pressure
11. Discharge pressure
12. Sheave make/size/bore
13. Number of Belts/Make/Size

14. Fan RPM

I. Return Air/Outside Air:

1. Identification/location
2. Supply air flow, design and tested
3. Return air flow, design and tested
4. Outside air flow, design and tested
5. Return air temperature
6. Outside air temperature
7. Mixed air temperature, design and tested

J. Exhaust Fans:

1. Location
2. Manufacturer
3. Model number
4. Serial number
5. Air flow, specified and tested
6. Total static pressure (total external), specified and tested
7. Inlet pressure
8. Discharge pressure
9. Sheave Make/Size/Bore
10. Number of Belts/Make/Size
11. Fan RPM

K. Duct Traverses:

1. System zone/branch
2. Duct size
3. Area
4. Design velocity
5. Design air flow
6. Test velocity
7. Test air flow
8. Duct static pressure
9. Air temperature
10. Air correction factor

L. Air Distribution Tests:

1. Air terminal number
2. Room number/location
3. Terminal type
4. Terminal size
5. Area factor
6. Design velocity
7. Design air flow
8. Test (final) velocity

9. Test (final) air flow
10. Percent of design air flow

3.7 DETAILED REQUIREMENTS

A. Adjusting and Balancing:

1. Adjust and balance all portions of the mechanical systems to produce indicated results within limits of minus 5 or plus 10 percent or as subsequently directed by the Architect.
2. Balancing data may be spot checked with instruments similar to that used by the balancing firm.
3. If, in the judgment of the Architect, the discrepancies warrant additional adjustment, readjust and rebalance the systems at no additional project cost.

END OF SECTION 230590

SECTION 230700 – HVAC INSULATION

PART 1 - GENERAL

1.1 DESCRIPTION

A. The requirements of this section apply to the insulation of mechanical equipment specified elsewhere in these specifications.

B. Related Work: The requirements of Section 230500, Common HVAC Materials and Methods, also apply to this section.

C. Some of the devices specified along with the means and methods are associated with Alternate #1. Alternate #1 is to install the owner provided boilers and pumps to complete the boiler plant as specified and designed in the contract documents. Under base bid piping is installed into the boiler room for the connection by a contractor or owner concurrent with the base bid work.

1.2 QUALITY ASSURANCE

A. Insulation Thickness and Thermal Performance: Comply with provisions of the State of Oregon Energy Code.

B. Composite (Insulation, Jacket or Facing and Adhesives) Fire and Smoke Hazard Ratings: Not to exceed a flame spread of 25 or smoke development of 50 and containing less than 0.1% by weight deca-PDE fire retardant.

C. Component Ratings of Accessories (Adhesives, Mastics, Cements, Tapes, Finishing Cloth for Fittings): Same as "B" requirements above and permanently treated. No water soluble treatments.

1.3 PRODUCT DELIVERY, STORAGE AND HANDLING

A. General: In addition to the requirements specified in Section 230500, the following apply:

1. Deliver insulation, coverings, cements, adhesives and coatings to the site in factory-fabricated containers with the manufacturer's stamp or label affixed showing fire hazard ratings of the products. Store insulation in original wrappings and protect from weather and construction traffic.
2. Protect insulation against dirt, water, chemical and mechanical damage. Do not install damaged insulation. Remove such insulation from project site.

1.4 SUBMITTALS

A. Submit catalog data and performance characteristics for each product specified.

PART 2 - PRODUCTS

2.1 ACCEPTABLE MANUFACTURERS

A. Insulating Manufacturers: Johns Manville, Knauf, Armstrong, Owens-Corning, Pittsburgh Corning, Pabco, Imcoa or Certain Teed. Johns Manville products are listed unless indicated otherwise.

B. Adhesive Manufacturers: Foster, 3M, Insul-Coustic, Borden, Kingco or Armstrong.

2.2 PIPING INSULATION

A. Interior and Exterior Piping Systems 50 to 850 Deg. F: Glass fiber preformed pipe insulation with a minimum K-value of 0.23 at 75 Deg. F, a minimum density of 3.5 pounds per cubic foot within all-service vapor barrier jacket, vinyl or pre-sized finish and pressure sensitive seal containing less than 0.1% by weight deca-PDE fire retardant.

B. Exterior Installations: Same as for interior installations except 0.016" aluminum finish jacket

C. Pipe Temperatures Minus 30 to 180 Deg. F: Flexible, preformed, pre-slit, self-sealing elastomeric pipe insulation up to 2-1/8" ID, thermal conductivity of 0.27 BTU/hr. sq. ft./in. at 75 deg. F and vapor transmission rating of 0.2 perms/inch. Apply in thickness necessary to prevent condensation on the surface at 85 deg. F and 70% RH. Armstrong "Armaflex 2000" or, in concealed locations, Imcoa or Nomaco also approved.

D. Interior Piping Systems 32 to 50 Deg. F: Glass fiber preformed pipe insulation with a minimum K-value of 0.23 at 75 deg. F, a minimum density of 3.5 pounds per cubic foot. Polymer vapor barrier jacket containing less than 0.1% by weight deca-PDE fire retardant and with pressure sensitive seal and wicking system to remove condensation from pipe surface. Owens Corning “VaporWick.”

2.3 DUCT INSULATION

A. Interior Above Grade Ductwork: Glass fiber formaldehyde-free blanket with "FSK" facing, k value = 0.31 at 75 deg. F, 0.2 perms, and UL 25/50 surface burning rating. Johns Manville "Microlite."

2.4 INSULATION ACCESSORIES

A. Insulation Compounds and Materials: Provide rivets, staples, bands, adhesives, cements, coatings, sealers, welded studs, etc., as recommended by the manufacturers for the insulation and conditions specified except staples not permitted on chilled water lines.

B. PVC Protective Jacketing and Valve and Pipe Fitting Covers: Johns Manville Zeston 2000, Proto LoSmoke, or Ceel-Co Ceel-Tite 100 Series with precut fitting fiberglass insulation or approved.

C. Jacket Lap Sealing Adhesives: Foster Drion 85-75 contact cement or approved substitute.

D. Saddles and Shields: Unless otherwise indicated and except as specified in piping system specification sections, install the following types:

1. Steel Pipe-Covering Protection Saddles (MSS Type 39): To fill interior voids with insulation that matches adjoining insulation.

2. Protection Shields (MSS Type 40): Of length recommended by manufacturer to prevent crushing insulation.
3. Thermal-Hanger Shield Inserts: For supporting insulated pipe, 360-degree insert of high-density, 100-psi (690-kPa) minimum compressive strength, water-repellent-treated calcium silicate or cellular-glass pipe insulation, same thickness as adjoining insulation with vapor barrier and encased in 360-degree sheet metal shield.

PART 3 - EXECUTION

3.1 PIPING INSULATION

A. General: Do not insulate underground piping except at joints and fittings on preinsulated piping unless indicated otherwise.

B. Heating Water Piping: Insulate with glass fiber pipe covering:

Size	Thickness
1/2" to 1-1/4"	1-1/2"
1-1/2" - 4"	2"

Regardless of code allowances piping shall be insulated beyond the control valve all the way to the coil.

C. Refrigerant Piping Insulation: Insulate suction piping with minimum 1/2" thick foamed plastic or of thickness necessary to prevent condensation at 85 deg. F and 70% RH. Where possible, slip insulation over the piping as it is installed. Seal all joint and seams.

D. Pipe Fittings:

1. Insulate and finish all fittings including valve bodies, bonnets, unions, flanges and expansion joints with precut fiberglass insulation and preformed PVC covers sealed to adjacent insulation jacket for continuous vapor barrier covering over all fittings.
2. Provide removable/reusable insulation covers on 4" and larger valves, unions, flanges, pump casings, strainers and similar fittings or equipment requiring periodic service.

E. Insulated Piping: Comply with the following.

1. Attach clamps and spacers to piping.
   a. Piping Operating above Ambient Air Temperature: Clamp may project through insulation.
   b. Piping Operating below Ambient Air Temperature: Use thermal-hanger shield insert with clamp sized to match OD of insert.
   c. Do not exceed pipe stress limits according to ASME B31.9.
2. Install MSS SP-58, Type 39 or Type 40 protection saddles, if insulation without vapor barrier is indicated. Fill interior voids with insulation that matches adjoining insulation.
   a. Thermal-hanger shield inserts may be used. Include steel weight-distribution plate for pipe NPS 4 (DN100) and larger if pipe is installed on rollers.
3. Shield Dimensions for Pipe: Not less than the following.

a. NPS 1/4 to NPS 3-1/2 (DN8 to DN90): 12 inches (305 mm) long and 0.048 inch (1.22 mm) thick.
b. NPS 4 (DN100): 12 inches (305 mm) long and 0.06 inch (1.52 mm) thick.
c. NPS 5 and NPS 6 (DN125 and DN150): 18 inches (457 mm) long and 0.06 inch (1.52 mm) thick.
d. NPS 8 and NPS 14 (DN200 and DN350): 24 inches (610 mm) long and 0.075 inch (1.91 mm) thick.
e. NPS 16 and NPS 24 (DN400 and DN600): 24 inches (610 mm) long and 0.105 inch (2.67 mm) thick.

4. Pipes NPS 8 (DN200) and Larger: Include wood inserts.
5. Insert Material: Length at least as long as protective shield.
6. Thermal-Hanger Shields: Install with insulation same thickness as piping insulation.

F. Piping Insulation Lap Seams and Butt Joints: Install insulation jacket in accordance with manufacturer's recommendation. Where jacket joint and lap seams have not adhered, remove affected section of insulation and reinstall or apply lap sealing adhesive in accordance with manufacturer's instructions.

3.2 DUCTWORK INSULATION

A. Ductwork: Insulate the following:

1. All supply ductwork.
2. All supply and return ductwork in systems routed in unconditioned spaces or exposed to the outside conditions.
3. All outside air intake ducts.
4. All ductwork required to be insulated by code.
5. All relief ducts.

B. Insulation Thickness: Select board and blanket insulation of thickness required to provide the following installed R-value.

1. All heating or cooling system supply and return ducts located on the exterior of the insulated building envelope and all outside air intake ducts.
   a. R-8
2. All heating and cooling system supply ducts located inside of building envelope or in unconditioned spaces, R-5.
3. All heating and cooling system return ducts located in vented spaces, R-8.

C. Fittings: Wire and duct adhesive as required. To prevent sagging on all rectangular or square ducts over 24" wide, install Gramweld or equal welding pins on the bottom. Maximum spacing 18" on center in both directions.

D. Installation: Applied with butt joints, all seams sealed with vapor seal mastic or taped with 2" wide vapor-proof, pressure-sensitive tape. Seal all penetrations with vapor barrier adhesive.

E. Internally Lined Ductwork: Where internally lined ductwork is indicated on the Drawings and/or specified, no exterior insulation is required. Select duct lining to provide the required R-value. Carefully lap the ends of the exterior insulation a minimum of 6" past the interior

insulation unless otherwise shown. Seal the end of vapor barrier jacket to the duct with mastic where the vapor barrier is required. Duct lining is specified in Section 233000.

END OF SECTION 230700

SECTION 231000 – FACILITY FUEL SYSTEMS

PART 1 - GENERAL

1.1 DESCRIPTION

A. The requirements of this section apply to the fuel storage, handling, and distribution systems for the facility.

B. Related Work: The requirements of Section 230500, Common HVAC Materials and Methods, also apply to this section.

C. Some of the devices specified along with the means and methods are associated with Alternate #1. Alternate #1 is to install the owner provided boilers and pumps to complete the boiler plant as specified and designed in the contract documents. Under base bid piping is installed into the boiler room for the connection by a contractor or owner concurrent with the base bid work.

1.2 CODES AND STANDARDS

A. General

B. NFPA 30, 31

C. UL-142

1.3 SUBMITTALS

A. Required for all items.

PART 2 - PRODUCTS

2.1 PIPING MATERIALS

A. Black Steel Pipe:

1. Applications: Above ground only.
   a. Natural Gas, indoors.
2. Pipe: Schedule 40, standard black steel pipe ASTM A-120 or A-53.
3. Threaded Fittings: For above ground installations only. Banded class 150 malleable iron fittings, ANSI B16.3 to 150 psi.
4. Welding Fittings: Standard weight, seamless steel, beveled end fittings, ANSI B16.9.
5. MegaPress Fittings: ½-inch through 2-inch shall conform to ASME B31.1, ASME B31.3, or ASME B31.9. Fittings shall have zinc and nickel coating, an HNBR sealing element, 420 stainless steel grip ring, separator ring, and an un-pressed fitting leak identification feature. Sealing elements shall be verified for the intended use. Viega MegaPress or Engineer approved equal.

B. Galvanized Steel Pipe:

1. Applications: Above ground only.
   a. Natural gas, outdoors.
2. Pipe: Schedule 40, standard galvanized steel pipe, ASTM A-53 or A-106.
3. Fittings: Banded class 150 galvanized malleable iron threaded fittings, ANSI B16.3.

2.2 PIPING ACCESSORIES

A. Fuel Gas Valves: UL listed or AGA approved valves.

1. 10 psig or Less:
   a. Ball: NIBCO bronze body T/S 585-70-UL, brass body FP-600.

B. Strainers: Threaded bronze or iron body for 175 working pressure, Y pattern with 1/32" stainless steel perforated screen.

C. Gas Pressure Regulators: Size based on pressures indicated on the Drawings and for 1.5 times connected load. Style and model as approved by Northwest Natural Gas Co. Regulators for systems operating above 2 PSI shall be rated for operation at 60 PSI minimum inlet pressure. The size of the orifice shall be clearly marked on the valve. Sensus, Emerson, Itron, or approved substitute.

PART 3 - EXECUTION

3.1 EQUIPMENT INSTALLATION

A. Locating and Positioning Equipment: Observe all Codes and Regulations and good common practice in locating and installing mechanical equipment and material so that complete installation presents the least possible hazard. Maintain adequate clearances for repair and service to all equipment. Installation of any equipment with less than minimum clearances shall not be accepted.

B. Anchorage: Anchor and/or brace mechanical equipment, piping and ductwork to resist displacement due to seismic action; include snubbers on equipment mounted on spring isolators.

3.2 PIPE INSTALLATION

A. General: Install pipe, tube and fittings in accordance with recognized industry practiced for each indicated service without piping failure. Install each run with a minimum of joints and couplings, but with adequate and accessible unions and flanges for disassembly, maintenance and/or replacement of valves and equipment. Reduce sizes (where indicated) by use of reducing fittings. Align piping accurately at connections.

B. Ferrous Threaded Piping: Thread pipe in accordance with ANSI 82.1; cut threads full and clean using sharp dies. Ream threaded ends to remove burrs and restore full inside diameter. Apply pipe joint compound where recommended by pipe/fitting manufacturer, on male threads at each joint and tighten joint to leave no more than 3 threads exposed.

C. Changes in Direction: Use fittings for all changes in direction. Run lines parallel with building surfaces.

D. Unions and Flanges: At all equipment to permit dismantling and elsewhere as consistent with good installation practice.

E. Expansion: Provide loops, swing joints, anchors, runouts and spring pieces to prevent damage to piping or equipment.

3.3 CLEANING

A. General: Clean all dirt and construction dust and debris from all mechanical piping systems and leave in a new condition. Touch up paint where necessary.

B. Fuel Piping: Blow clear of debris with nitrogen or oil free air.

3.4 TEST

A. General: Minimum duration of two hours or longer, as directed for all tests. Furnish report of test observation signed by qualified inspector. Make all tests before applying insulation, backfilling, or otherwise concealing piping or connecting fixtures or equipment. Where part of the system must be tested to avoid concealment before the entire system is complete, test that portion separately, same as for entire system.

B. Natural Gas or Propane Piping: One half hour minimum air at 60 psig for 2 psig gas, and 15 minutes at 10 psig for 7" water gauge natural gas or as approved and certified by serving utility.

3.5 MECHANICAL PAINTING

A. Uninsulated Piping: Paint black steel piping in moist equipment rooms, crawl spaces, inside of secondary containment piping, or exposed to weather two (2) coats black rust-inhibiting paint.

END OF SECTION 231000

SECTION 232100 – HYDRONIC PIPING AND PUMPS

PART 1 - GENERAL

1.1 DESCRIPTION

A. The requirements of this section apply to the HVAC heating and cooling water systems. Provide pipe, pipe fittings, pumps, and related items required for complete piping system.

B. Related Work: The requirements of Section 230500, Common HVAC Materials and Methods, also apply to this section.

C. Some of the devices specified along with the means and methods are associated with Alternate #1. Alternate #1 is to install the owner provided boilers and pumps to complete the boiler plant as specified and designed in the contract documents. Under base bid piping is installed into the boiler room for the connection by a contractor or owner concurrent with the base bid work. Provide temporary caps on systems for testing prior to Alternate #1 system being connected to the Base bid system. Complete cleaning of the entire system once Alternate #1 system is installed, has been tested and is ready for cleaning.

1.2 QUALITY ASSURANCE

A. General: ASTM and ANSI Standards are indicated. In addition, special standards are referenced where neither ASTM nor ANSI Standards are applicable.

B. Labeling: All piping shall be continuously and legibly labeled on each length as required by codes and standards and including as a minimum, country of origin, manufacturers identification marking, wall thickness designation, and applicable standards and approvals. Fittings shall be labeled as required by the referenced standard.

C. Concealed Plastic Piping: No concealed plastic piping inside the building unless approved by Code or Governing Authorities.

D. Definitions: Where piping fluid is not indicated in the following paragraphs, provide similar piping materials for similar fluids.

E. To assure uniformity and compatibility of piping components in grooved piping systems, all grooved products utilized shall be supplied by a single manufacturer. Grooving tools shall be supplied from the same manufacturer as the grooved components.

1. All castings used for coupling housings, fittings, and valve bodies shall be date stamped for quality assurance and traceability.

1.3 STORAGE AND HANDLING

A. Provide factory-applied end caps on each length of pipe and tube. Maintain end caps through shipping, storage and handling as required to prevent pipe-end damage and eliminate dirt and

moisture from inside of pipe and tube. Protect flanges and fittings from moisture and dirt by inside storage and enclosure, or by packaging with durable, waterproof wrapping.

1.4 SUBMITTALS

A. Submit catalog data, construction details, and performance characteristics for all equipment.

B. Submit operating and maintenance data.

PART 2 - PRODUCTS

2.1 PIPING MATERIALS

A. Copper Pipe and Tube:

1. Application:
   a. Heating water 2 ½" and larger.
   b. Cooling coil condensate drain.
2. UPC approved copper fitting with EPDM o-ring.
3. Press fit connection. See “B” for pipe.
4. Apollo Press is owners preferred system. Viega Pro Press is approved where tooling matches Apollo..

B. Copper Pipe and Tube:

1. Application:
   a. Heating water 2 ½" and larger.
2. Pipe: Type L hard temper copper with brazed joints, ASTM B88.
3. Fittings: Wrought copper solder-joint fittings, ANSI B16.22.

C. Plastic Pipe:

1. Application:
   a. Indoor heating water and chilled water above grade where continuously supported per specifications with manufacturers support channel**,** concealed**,** and smaller than nominal 2 ½ " size.
   b. Size shall be one nominal pipe size greater than the size on the Drawings.
2. Pipe:
   a. Cross-linked polyethylene (PEX) tubing manufactured by PEX-a or Engel Method for closed loop heating service (with oxygen barrier): Tested/listed to ASTM E84, ASTM F876 and F877, and CSA B137.5 listed certified to NSF standards 14 and 61. Rated for 100 PSI at 180º F. Wirsbo AQUAPEX or approved.
3. Fittings: ASTM F1960 cold expansion fittings. Provide fittings of the type matching piping manufacture and recommended by the piping manufacturer for the service indicated.
4. Insulate per specification - pre-insulated pipe is not allowed.

2.2 MISCELLANEOUS PIPING MATERIALS/PRODUCTS

A. Soldering and Brazing Materials: Provide soldering materials as determined by the installer to comply with installation requirements.

1. Tin-Antimony Solder: ASTM B32, Grade 95TA.
2. Lead-Free Solder: ASTM B32, Grade HB. Harris "Bridgit" approved.
3. Silver Solder: ASTM B32, Grade 96.5TS.

B. Strainers: "Y-pattern," bronze body rated for pressures indicated with blow-off connection and 20 mesh stainless steel screen or perforated metal basket with 1/16" or 1/8" openings.

C. Valves up to 12": Model #'s listed are Nibco unless noted otherwise. Aproved equal are Watts, Hammond, Appollo, and Victualic.

1. Ball (to 2-1/2"):
   a. Two-piece, cast bronze body, full port, 600 psi WOG, T/S 585-70.
   b. Two-piece, cast bronze body, full port, 600 psi WOG, T 585-66.
2. Ball (3" to 4"):
   a. Two-piece, cast brass body, full port, 600 psi WOG, PC/T-FP600A series.
3. Check: Bronze body, spring-assisted swing check, 300 psi WOG, T/S-413B and F-918B.

D. Control Valves: Provided by Owners control contractor and installed by Division 23.

2.3 HEATING WATER SPECIALTIES

A. Air Vents: Install at all system high points whether shown or not;

1. At all locations not in mechanical rooms use manual air vents.
2. At mechanical rooms fabricate of 2" diameter or larger pipe at least 12" long. At the high point of each main install an Armstrong No. 1AV autovent, or equivalent
   Bell & Gossett, Armstrong, Dunham-Bush approved substitute. Route discharge line to over floor sink.

B. Flow Control Valve:

1. Install where shown on plans, flow metering or flow limiting fittings complete with P/T test flow meter valves and with size and series identification tags. Install as recommended by manufacturer.
2. Valves shall be dynamic flow limiting devices sized to the nearest 0.5 gpm. Stainless steel or brass cartridge and stainless steel spring. Brass body with ends to match piping system.
3. Unless noted otherwise all flow control valves are flow limiting not balancing valves.
4. Caleffi 132 series or approved equal.

C. Pressurized Precharged Expansion Tank: Precharged bladder type hydropneumatic tank with all necessary air elimination fittings. Install with ball valve on piping connection. Amtrol, Taco, Bell & Gossett, Armstrong, Wheatley, Wessels or approved substitute.

D. Triple Duty Valve: Combination spring loaded vertical check, calibrated balancing and shut off valve with balance point memory in angle or straight pattern as required or as shown on the

Drawings. Bell & Gossett, Taco, Armstrong, Thrush, Victaulic, Wheatley, Patterson or approved substitute.

E. QUAD Air Eliminator, Dirt Separator, Hydraulic Separator, Magnetic Separator:
Full flow coalescing type combination air eliminator, dirt separator, hydraulic separator. Selection shall be based upon system flows with pipe size as a minimum. Separator shall be fabricated steel, rated for 150 psig minimum working pressure, stamped and registered in accordance with ASME for unfired pressure vessels. Unit shall include internal elements filling the entire vessel to suppress turbulence and provide air elimination efficiency of 100% free air, 100% entrained air, and 99.6% dissolved air at the installed location. Dirt separation efficiency shall be a minimum of 80% of all particles 30 micron and larger within 100 passes. The elements shall consist of:

1. A copper core tube with continuous wound copper wire medium permanently attached and followed by a separate continuous wound copper wire permanently affixed.
2. 300 Series stainless steel mesh.
3. Provide with removable magnets and purge valve.
4. Approved manufacturers:
   a. Caleffi NA 549 SEP4.
   b. Spirovent Quad® Series VDX when installed with a Metraflex LPD-Mag Y strainer.
   c. Or approved.

F. Suction Diffusers: Where indicated on Drawings provide a suction diffuser with stainless steel inlet vanes, combination diffuser-strainer orifice cylinder 20-mesh stainless steel and temporary start-up strainer on the inlet of base mounted pumps. Bell & Gossett, Taco, Armstrong, Thrush, Victaulic, Wheatley, Patterson or approved substitute.

G. Circuit Setter and Balancing Valves: Globe style with calibrated handle style balancing fitting with differential pressure taps, brass or bronze body and trim. TA Hydronics STAD series, or equal Nexus, Wheatley or approved substitute. Valves shall only be used where specifically called out for balance valve, otherwise use flow control valve.

H. Chemical Shot Feeder: 2 gallon feeder rated for 125 psi working pressure complete with fill funnel and valve or cap, drain valve, air vent, and inlet and outlet connections. Griswold FB series, Vector Industries or approved.

2.4 HYDRONIC PUMPS

A. Pipe mounted, in-line arrangement with mechanical seals with ceramic seal seats, suitable for continuous operation at 225 deg. F at head and capacity stated on Drawings. Stainless steel casing or stainless fitted cast iron casing (all wetted items shall be non-ferrous). Stainless steel cartridge with non-metalic impeller. 3250 rpm EC motor where EC motor is scheduled. Where VFD powered is listed the motor shall be 1750 RPM unit. B & G, Grundfos, or approved.

2.5 HEATING WATER COILS

A. Non-ferrous extended surface, counterflow serpentine type with heavy gauge galvanized steel casing suitable for mounting required. Assembled with 5/8” OD x 0.020” thick copper tubes brazed to copper headers with drain and vent tappings. Copper or aluminum fins mechanically bonded to tubes and spaced a maximum of 12 fins per inch. Construction shall allow for expansion and contraction without developing leaks. Permanently label each coil in accessible location with all operating parameters. Ferrous headers or connections are not allowed.

PART 3 - EXECUTION

3.1 PIPE INSTALLATION

A. General: Install pipe, tube and fittings in accordance with recognized industry practices. Install each run accurately aligned with a minimum of joints and couplings, but with adequate and accessible unions and flanges for disassembly, maintenance and/or replacement of valves and equipment. Reduce sizes (where indicated) by use of reducing fittings.

1. Unions and flanges for disassembly, maintenance and/or replacement of valves and equipment are not required in installations using grooved joint couplings. (The couplings shall serve as disconnect points.)

B. Piping Runs: Route piping close to and parallel with walls, overhead construction, columns and other structural and permanent-enclosure elements of the building (pitched for drainage). If not otherwise indicated, run piping in the shortest route which does not obstruct usable space or block access for servicing the building or equipment and avoid diagonal runs. Wherever possible in finished and occupied spaces, conceal piping from view. Do not encase horizontal runs in solid partitions.

3.2 PIPING JOINTS

A. General: Provide joints of the type indicated in each piping system, and where piping and joint as manufactured form a system, utilize only that manufacturer's material.

B. Solder Copper Tube and Fitting Joints: In accordance with recognized industry practice. Cut tube ends squarely, ream to full inside diameter, and clean outside of tube ends and inside of fittings. Apply solder flux to joint areas of both tubes and fittings. Insert tube full depth into fitting, and solder in a manner which will draw solder full depth and circumference of joint. Wipe excess solder from joint before it hardens. "T-Drill" field formed tees may be utilized where the main is at least two pipe sizes larger than the branch.

C. Braze Copper Tube and Fitting Joints: Where indicated, in accordance with ANSI/ASME B31.5. Pass a slow stream of dry nitrogen gas through the tubing at all times while brazing to eliminate formation of copper oxide.

D. Insulating (Dielectric) Fittings: Where the "joining of ferrous and non-ferrous piping". Use brass valve or brass nipple with length/nominal dramatic ratio of 8 or greater rather than dielectric fitting.

E. Changes in Direction: Use fittings for all changes in direction. Run lines parallel with building surfaces.

F. Line Grades: Pitch hydronic piping 1" to 40' minimum to low point drips or drains.

G. Unions and Flanges: At all equipment to permit dismantling and elsewhere as consistent with good installation practice.

H. Expansion: Provide loops, swing joints, anchors, runouts and spring pieces to prevent damage to piping or equipment. Flexible hoses are not allowed.

3.3 MISCELLANEOUS PIPING EQUIPMENT

A. Floor, Wall and Ceiling Plates: Chrome plated pressed steel or brass screw locked split plates on all pipe penetrations in finished spaces.

B. Strainers: Install in a manner to permit access for cleaning and screen removal and with blow-off valve.

C. Valves: Install valves in accordance with Section 230500. Install control valves specified in other division 23 sections.

3.4 EQUIPMENT INSTALLATION

A. Installation and Arrangement: Install and arrange as shown on the Drawings. Comply with manufacturer's recommendations for installation connections and start-up.

B. Expansion Joint and Compensator Installation: Carefully align joint or compensator and make proper allowance for temperature of pipe at time of installation.

C. Air Vents: Conduct 1/4" copper tubing from high end of air chambers to accessible locations and terminate with screwdriver cock. Conduct 1/4" copper tubing from outlets of automatic air vents to floor drains indicated or to the outside when approved by Governing Authorities.

D. Mechanical contractor and balancing contractor shall be trained on installation, connection, and balancing procedures by certified representative of differential pressure control valves.

E. Hydronic pumps are Owner provided and Contractor installed.

3.5 CLEANING

A. General: Clean all dirt and construction dust and debris from all mechanical piping systems and equipment and leave in a new condition. Touch up paint where necessary.

B. Heating Water Piping Systems:

1. Add cleaning chemical in proper concentration to clean system of manufacturing and installation contamination and residue.
2. Fill, vent and circulate the system with this solution at design operating temperature. After circulating for four hours, bleed out cleaning solution by the addition of fresh water

to the system.

3. Test for pH and add sufficient amount of the cleaning chemical to obtain a pH between 7 and 8.
4. Clean all strainers and remove start-up strainers (from suction diffusers) after the system has operated for one week.

3.6 TEST

A. General:

1. Minimum duration of two hours or longer, as directed for all tests. Furnish report of test observation signed by qualified inspector. Make all tests before applying insulation, backfilling, or otherwise concealing piping or connecting fixtures or equipment. Where part of the system must be tested to avoid concealment before the entire system is complete, test that portion separately, same as for entire system.
2. Provide all necessary temporary equipment for testing, including pump and gauges. Remove control devices before testing and do not use piping system valves to isolate sections where test pressure exceeds valve pressure rating. Fill each section with water and pressurize for the indicated pressure and time.
3. Observe each test section for leakage at end of test period. Test fails if leakage is observed or if pressure drop exceeds 5% of test pressure.

B. Repair:

1. Repair piping system sections which fail the required piping test by disassembly and re-installation, using new materials to the extent required to overcome leakage. Do not use chemical stop-leak compounds, solder, mastics, or other temporary repair methods.
2. Drain test water from piping systems after testing and repair work has been completed.

C. Heating Water Piping: 75 psig hydrostatic for 30 psig systems without loss for four hours.

D. Existing Coils: Pressure test to no greater than 20 PSI without loss for 4 hours.

END OF SECTION 232100

SECTION 232500 – HVAC WATER TREATMENT

PART 1 - GENERAL

1.1 DESCRIPTION

A. The requirements of this section apply to the chemical treatment of the mechanical systems. Provide shot feeding of treatment chemicals for closed loop hydronic systems. Provide continuous treatment for open loop systems, including steam systems.

B. Related Work: The requirements of Section 230500, Common HVAC Materials and Methods, also apply to this section.

C. Some of the devices specified along with the means and methods are associated with Alternate #1. Alternate #1 is to install the owner provided boilers and pumps to complete the boiler plant as specified and designed in the contract documents. Under base bid piping is installed into the boiler room for the connection by a contractor or owner concurrent with the base bid work. Treatment of the system shall be conducted after the Alternate #1 portion of the system has been installed.

1.2 QUALITY ASSURANCE

A. Regulations: Comply with all DEQ, EPA, OSHA, OSEA, local sewerage agency and Fire Marshal requirements concerning allowable amounts of each chemicals which can be disposed of through the sewer system or in proximity of personnel.

B. Codes: Comply with applicable sections of the State of Oregon Health and Safety Code, OAR Chapter 437, Div. 155, Hazard Communication.

C. Chemical treatment system design, installation, and startup shall be performed by an experienced HVAC system chemical treatment contractor. Chemsearch only.

D. Field Wiring: It is the intent of these specifications that all systems shall be complete and operable. Refer to all drawings and specifications, especially the electrical drawings, to determine voltage, phase, circuit ampacity and number of connections provided. Provide all necessary field wiring and devices from the point of connection indicated on the electrical drawings. Bring to the attention of the Architect in writing, all conflicts, incompatibilities, and/or discrepancies prior to bid or as soon as discovered.

1.3 SUBMITTALS

A. Submit catalog data of chemical treatment equipment, installation details and list of likely chemicals to be used.

B. Submit all chemical Material Safety Data Sheets for each chemical.

C. Submit operating and maintenance data.

1.4 DELIVERY AND HANDLING

A. Chemical Containers Label: The following shall be included as a minimum label on chemical containers:

1. Chemical contents.
2. Hazard warnings prominently displayed.
3. Manufacturer's and/or supplier's name and address.

B. Delivery: All chemical containers shall be factory sealed and unopened.

PART 2 - PRODUCTS

2.1 PERFORMANCE CRITERIA

A. Corrosion: Provide a system to limit annual metal corrosion rates as follows:

1.	Cast iron	< 0.002" per year.
2.	Copper	< 0.0005" per year.
3.	Mild steel	< 0.002" per year.
4.	Stainless steel	< 0.0001" per year.

B. Scaling: System shall prevent no greater than 1% loss of heat transfer efficiency in any component or piece of equipment by preventing deposit formation.

C. Fouling: Recommend methods to keep fouling to a minimum. Set blow down rates and/or schedules.

D. Biological Contamination for Closed Loop Systems: Keep biological counts (algae, bacteria and fungi) to near zero readings.

PART 3 - EXECUTION

3.1 PIPING INSTALLATION

A. Refer to applicable Sections for Valves, Insulation, Painting, etc.

3.2 EQUIPMENT INSTALLATION

A. Installation and Arrangement: Install and arrange as shown on the Drawings. Comply with manufacturer's recommendations for installation connections and start-up.

B. Lubrication: Lubricate all moving and rotating parts in accordance with the manufacturer's recommendations prior to start-up.

3.3 CHEMICAL TREATMENT OF HEATING WATER SYSTEM

A. General: Provide chemical treatment for the heating water system. The treatment specialist

shall recommend the proper treatment for the systems and initiate the various treatments, including the required chemicals.

B. Standards: Chemical treatment shall be in accordance with currently accepted standards for the Environmental Protection Agency (EPA). Chemicals shall be EPA registered and labeled in accordance with EPA Standards.

C. Implement the treatment and instruct the Owner's personnel in the proper care, use, and maintenance of the systems. Include testing procedures to maintain proper control and to assure adequate corrosion protection and control of water side deposits and scale.

D. Provide an initial start-up supply of chemicals and add them to the systems to maintain the system at proper chemical level.

E. Upon completion of cleaning and chemical treatment, tag each system as follows: "This piping system has been cleaned and chemically treated. Do not disturb unless authorized." Locate tag to be plainly visible.

END OF SECTION 232500

SECTION 233000 – AIR DISTRIBUTION

PART 1 - GENERAL

1.1 DESCRIPTION

A. Provide Air Distribution Materials as specified herein and as shown on the Drawings.

B. Material characteristics and size shall be as indicated on the Drawings.

C. Related Work: The requirements of Section 230500, Common HVAC Materials and Methods, also apply to this section.

1.2 QUALITY ASSURANCE

A. Air Distribution Equipment Rating: In accordance with AMCA certified rating procedures and bearing the AMCA label.

B. See Commissioning specification for additional requirements.

1.3 SUBMITTALS

A. Submit catalog data, construction details and performance characteristics for all manufactured materials.

B. Submit operating and maintenance data.

C. For adhesives and sealants used on the interior of the building (inside the waterproofing system), include printed statement of volatile organic compound (VOC) content.

PART 2 - PRODUCTS

2.1 SHEET METAL

A. Quality Assurance: Galvanized steel sheet metal except where otherwise indicated. Metal gauges, joints and reinforcement in accordance with Mechanical Code, ASHRAE and SMACNA standards. Ductwork shall be fabricated to the following pressure classifications:

1. Return and exhaust ducts: 2" negative.
2. Supply ducts: 2" positive.

B. Acoustical Duct Lining: Line ducts with 1" thick lining (unless noted otherwise) for installation inside the building insulation envelope, and 1-1/2” for installation outside the building insulation envelope. Schuller "Linacoustic," Owens Corning "Aeroflex" Type 150, and Certainteed “ToughGard” Type 150 approved, meeting NFPA 90A and B requirements for maximum flame spread and smoke developed. Duct liner adhesive shall conform to ASTM C916.Mechanically attach lining to sheet metal duct with fasteners conforming to SMACNA Standard MF-1-1971, Schuller Grip Nails or Gramweld welding pins. Apply fire-retardant type

adhesive similar to Schuller No. 44 adhesive, Benjamin Foster 81-99, Insul-Coustic 22 or 3M equivalent on all leading edges, joints and seams.

C. Duct Sealing Tapes: Provide one of the following UL listed ductwork sealing tape systems.

1. Two-part sealing system with woven fiber, mineral gypsum impregnated tape and non-flammable adhesive. Hardcast "DT" tape and "FTA-20" adhesive, United "Uni-Cast" system, or accepted substitute.
2. For joints and seams exposed to the weather in lieu of soldering, United "Uni-Cast" system or approved.
3. Sealing systems with VOC content are not allowed.
4. Sealants and Primers – General: Provide only products having lower volatile organic compound (VOC) content than required by South Coast Air Quality Management District Rule No. 1168.

D. Optional Duct Joints for Sheet Metal Ducts: "Ductmate System" by Ductmate Industries, Inc., Ward Duct Connectors, Inc., Mez Industries, or acceptable substitute. Spiramir self-sealing round duct connector system meeting Class 3 leakage standards with EPDM o-ring seal.

E. Exposed to View Spiral Seam Duct and Fittings: Round and flat oval spiral seam duct shall be manufactured of galvanized steel sheet metal with spiral lock seam. Matching fittings shall be manufactured of galvanized steel with continuous welded seams. Gauge shall be per SMACNA Duct Construction Standard third addition table for appropriate pressure, and reinforcement or at least 26 gauge.

F. Concealed Round Duct: Round and flat oval spiral seam duct shall be manufactured of galvanized sheet metal with spiral lock seam. Construction, gauges, and reinforcement in accordance with SMACNA standards. Fittings shall be manufactured of galvanized steel with spot welded or riveted and sealed seams or continuously welded seams. Snap lock longitudinal seam duct shall fully comply with SMACNA standards for duct gauge and seam type for appropriate pressure class. Adjustable elbows are prohibited.

G. Flexible Ductwork-Low Pressure: Insulated low pressure flexible duct, factory fabricated assembly consisting of a zinc-coated spring steel helix seamless inner liner, wrapped with a nominal 1" thick insulation for installation inside the building insulation envelope, and 1-1/2" for installation outside the building insulation envelope, 1 pound/cubic foot density fiberglass insulation. The assembly shall be sheathed in a vapor barrier jacket, factory vapor resistance sealed at both ends of each section. The composite assembly, including insulation and vapor barrier, shall meet the Class 1 requirements of NFPA Bulletin No. 90-A and be labeled by Underwriters Laboratories, Inc., with a flame spread rating of 25 or less and a smoke developed rating of 50 or under. The duct shall have factory sealed double air seal (interior and exterior) to assure an airtight installation. Genflex, ATCO, Wiremold, Thermaflex, Glassflex, Clevepak, Schuller, or accepted substitute.

2.2 ACCESSORIES

A. Manual Volume Dampers: Construct of material two gauges heavier than duct in which installed; single plate up to 12" wide; multiple over 12" wide. Hem both edges 1/2" and flange sides 1/2". Use Young, Duro-Dyne, MAT, or accepted substitute damper accessories. Young

numbers are shown.

1. No. 605 bearing set with No. 403 regulator for dampers up to 24" long.
2. For dampers over 24" long use No. 660 3/8" rod, No. 656 end bearing and No. 403 regulator.
3. Where damper regulators are not readily accessible, use No. 660 or No. 661 rod extensions and No. 301 and No. 315 concealed damper regulators or MAT cable operated dampers as required.

   Location of all volume dampers is not necessarily shown on Drawings; minimum required is one in each supply, return or exhaust main, and one in each branch.

B. Locking Connection Straps: 1/2" wide positive locking steel straps or nylon self-locking straps. Panduit or accepted substitute.

C. Connection Fittings: Connections to non-metallic ducts manufactured sheet metal "spin-in" fittings. Genflex, Wiremold, Thermaflex, Glassflex, Clevepak, Schuller, or accepted substitute.

D. Access Doors In Sheet Metal Work:

1. Hollow core double construction of same or heavier gauge material as duct in which installed. Use no door smaller than 12" by 12" for simple manual access or smaller than 18" by 24" where personnel must pass through infrequently. Use 24" by 60" minimum for filters and more frequent maintenance. Use Ventlok or accepted substitute hinges and latches on all doors.
   a. 100 series hinges and latches on low pressure system doors up to 18" maximum dimension.
   b. 200 series on larger low pressure system doors and 333 series on high pressure systems.
2. Construct doors up to 18" maximum dimension with 1" overlap, furr and gasket with 3/4" by 1/8" sponge rubber. Fit larger doors against 1-1/2" by 1/8" or angle frame and gasket with 3/4" by 1/8" sponge rubber or felt.

E. Anti-Backdraft Dampers: Connected, gasket-edged aluminum blades set in 14 gauge or heavier steel frame; brass, nylon or Teflon bearings; equip with spring helper with tension adjustment feature or with adjustable counterweight and adjust to open when not more than 0.10" wg pressure is applied. Ruskin CBS-4, Greenheck, Pacific Air Products, Air Balance, Controlair or accepted substitute.

F. Opposed Blade Volume Damper: Install opposed blade volume damper in each zone supply duct on discharge of multi-zone units and where indicated on Drawings. Young No. 817 or accepted substitute.

G. Flexible Connections: Neoprene impregnated fiberglass connection. Ventglass, Duro-Dyne, or accepted substitute.

H. Standard Gravity Exhaust Intake Heads:

1. Aluminum cap with backdraft dampers on relief only, curb connection, flashing, 1/2"

mesh galvanized bird screen and hinged access. Greenheck, Carnes, Cook or accepted substitute.

2. Install with automatic relief / outside air intake damper in curb as indicated on the Drawings.

I. Control Dampers: Construct of aluminum frame and blades with continuous full length axle shafts and/or operating "jackshafts" as required to provide coordinate tracking of all blades. Interlocking multi-blade type, except where either dimension is less than 10", a single blade may be used. Opposed blade type on all modulating dampers and parallel blades on all two position dampers. Provide with metal jamb seal and neoprene blade seals. Damper assembly rated for maximum air leakage of 4 CFM per square foot at 1" wg pressure or less and with interconnecting blade linkages in the side channels of the frame.

2.3 GRILLES, REGISTERS AND DIFFUSERS

A. Description: Provide grilles, registers and diffusers as shown on the Drawings.

B. Finishes:

1. Steel: Flat white enamel prime coat, factory applied on ceiling diffusers. Others are to have a baked enamel finish, color as selected by Architect.
2. Aluminum: Anodized clear finish unless indicated otherwise.

C. Manufacturers: Carnes, Krueger, Titus, Price, Nailor, Metalaire, and Tuttle & Bailey are accepted substitutes where only Titus model numbers are listed. Where other manufacturer's products are listed and/or "accepted substitute" is indicated, only the products or an accepted substitute for that item shall be provided.

D. Ceiling Return, Transfer Grilles, or Exhaust Grilles: Perforated snap-in or concealed hinged face plate. Use in spaces containing ceiling diffusers and/or T-bar ceilings. Provide with damper except where dampered plenums are indicated. Titus PAR

E. Modular Core Ceiling Supply Diffusers: 1 to 4-way pattern control. Pattern of distribution is 4-way unless indicated otherwise. Provide with opposed blade volume dampers and frame for unit as required. Titus MCD.

PART 3 - EXECUTION

3.1 INSTALLATION OF GRILLES, REGISTERS AND DIFFUSERS

A. Size and air handling characteristics shall be as shown on the Drawings.

B. Locate, arrange, and install grilles, registers and diffusers as shown on the Drawings. Locate registers in tee-bar ceilings with diffusers centered on the tile unless indicated otherwise.

3.2 DUCTWORK INSTALLATION

A. Support: Install ductwork with 1" wide strap cradle hangers not more than 8' on centers or as

required by code. Support terminal units independent of adjacent ductwork. Attach to available building construction according to good practices for materials involved. Manufactured hanger system acceptable in lieu of fabricated hangers at contractors option. Ductmate "Clutcher" system or approved. Support flexduct where shown to be used for lengths beyond 4' per above requirements. Comply with SMACNA Duct Construction Standard Figure 3-9 and 3-10.

B. Fan and Air Handling Unit Flexible Connections: Install neoprene impregnated fiberglass connections in ductwork at all rotating equipment. Ventglass, Duro-Dyne or accepted substitute.

C. Elbows and Fittings: Construct elbows with throat radius equal to duct width in plane of turn or make them square and provide double wall, air foil turning vanes.

D. Fittings: Make transitions and take-offs as shown on Drawings. Provide volume dampers and splitter dampers as indicated on Drawings and as specified. Saddle tees are not allowed.

E. Acoustical Duct Lining:

1. Acoustically line all fan unit intake and discharge plenums, all ductwork indicated as lined on the Drawings, all sheet metal ductwork specified per Section 230700 as insulated, where exposed to view or subject to damage in areas such as mechanical rooms, and, at the Contractor's option, all insulated ductwork specified in Section 230700 except outside air intake ducts. The duct size noted on the Drawings is the clear opening of the duct with insulation. Insulation shall not reduce duct size listed **unless noted, otherwise lined at least the first 20' of SA, RA, or exhaust air duct nearest the unit**.
2. All duct designated to receive duct liner shall be completely covered with a fire-resistant, fiber-bonding coating, or covering (composite, polymer, vinyl or neoprene) that reduces airflow resistance and controls fiber release. The duct lining shall be adhered to the sheet metal with 100% coverage of a fire retardant adhesive. The coated surface of the duct liner shall face the airstream. When width of duct exceeds 12" and also when height exceeds 24", use corrosion resistant mechanical fasteners 12" on center maximum lateral spacing and 18" on center maximum longitudinal spacing. Start fastening within 3" of upstream transverse edge of the liner and within 3" of the longitudinal joint. Mechanical fasteners shall be either impact-driven or weld-secured and shall not pierce the duct walls. Fasteners and washers of the specified type and length shall be used assuring no greater than 10% compression of the liner thickness. Installation shall be made so that no fastener pins protrude into the airstream. No gaps or loose edges shall occur in the insulation. Top pieces shall be supported by the side pieces. Provide insulated build out frames for attaching dampers at running vanes where required.
3. All transverse and longitudinal abutting edges of duct lining shall be sealed and lapped 3" with a heavy coat of approved adhesive, in accordance with the manufacturer's recommendations. All upstream transverse edges shall be installed with sheet metal nosings. All raw exposed edges of lining shall be 'buttered' with approved adhesive.

F. Manual Volume Dampers: Location of all volume dampers are not necessarily shown on the Drawings. Provide a minimum of one volume damper in each supply, return or exhaust branch. Install dampers in fiberglass ductwork (where fiberglass ductwork is allowed) with galvanized sheet metal sleeves of sheet metal gauges required for metal duct systems of the same dimensions.

G. Duct Insulation: Specified in Section 230700.

H. Sleeves: Provide galvanized sheet metal plaster ring around ductwork penetrating exposed finished walls. Sleeve and flash all duct penetrations through exterior walls in an air tight and weatherproof manner.

I. Plenums: Construct sheet metal plenums and partitions of not lighter than 18 gauge galvanized steel and reinforce with 1-1/2" by 1/2" by 1/8" angles as required to prevent drumming or breathing.

J. Access: Install necessary access opening and covers for cleaning, wiring or servicing motors, filters, fans, both entering and leaving air sides of coils, fire and/or smoke dampers and to other equipment located within or blocked by sheet metal work.

K. Sealing: Caulk, seal, grout and/or tape ductwork and plenums to make airtight at seams, joints, edges, corners and at penetrations. Solder all seams, joints, etc., on all ductwork exposed to the weather. Install specified tape in accordance with manufacturer's requirements using degreaser on surfaces to be taped and wiped to eliminate moisture.

3.3 NEW DUCTWORK CLEANING

A. Store all ductwork materials on pallets or above grade, protected from weather, dirt/mud and other construction dust.

B. Remove all accumulated dust, dirt, etc. from each duct section as it is being installed.

C. Prior to installation of diffusers, grilles and registers, install temporary system filters and cover all diffuser, grille and register openings with temporary 25% efficiency filter materials and start the fan systems. Operate fans a minimum of 8 hours. Remove all temporary filters at the end of that period.

D. Clean all diffusers, grilles and registers just prior to project final completion.

E. Cover all ductwork terminations during construction to prevent accumulation of dust and debris.

3.4 EXISTING DUCT CLEANING

A. Return and Outside Air Duct System Cleaning.

1. Clean all sheet metal ductwork of return air grills.
2. Install additional entry points as needed to provide thorough cleaning.
3. Seal access points after cleaning.
4. Mark location of manually operated dampers and air-direction devices before cleaning and return to marked position upon completion.
5. Protect all furniture and equipment during cleaning.
6. Return all ceiling tiles, access panels, and any furniture or equipment moved to original position.
7. Clean up all debris created by cleaning.

8. Provide before and after pictures of ductwork to Owner upon completion.
9. See section B for details.

B. Detailed Duct and Equipment Cleaning.

1. The ACR NADCA Standard 2013 will be referenced in this procedure. References made to that standard by default include the supporting information (definitions, terms, etc.) of that document. References to NADCA reference the standard.
   Comply with sections 2 and 3 of NADCA
   Procedure:
2. Service Openings: Service openings may be needed to perform assessment, cleaning and restoration (ACR) procedures. Below are the minimum requirements for service openings.
   a. Service openings installed into the system shall not degrade the structural, thermal, or functional integrity of the system.
   b. Service openings shall be created in a manner that allows for proper closure.
   c. Service openings shall not hinder, restrict, or alter the airflow within the air duct.
   d. Service opening construction materials and methods shall be in compliance with industry standards and local codes, using materials acceptable under those standards and codes.
3. Materials used in the fabrication of duct access doors and permanent panels shall be those classified for flammability and smoke spread if the material is exposed to the internal airstream. These materials are classified as having a flame-spread rating of not over 25 without evidence of continued progressive combustion and a smoke-developed rating of not over 50, as determined by UL 723.
4. All tapes used in the installation and closure of service openings shall meet the requirements of UL 181A.
5. All service openings shall comply with applicable UL, SMACNA and NFPA standards, as well as local, regional, and state codes.
6. Service Panels:
   a. Service panels used for closing service openings in the HVAC system shall be of an equivalent gauge or heavier so as to not compromise the structural integrity of the duct.
   b. Service panels used for closing service openings shall be mechanically fastened (screwed or riveted) at minimum every 4" on center. The panel shall overlap the ductwork surfaces by a minimum of 1" on all sides.
   c. It is recommended that service panels used for closing service openings be sealed with gaskets, duct sealants, mastic, or tape.
7. Prefabricated Duct Access Doors: The gauge of the duct access door shall be based on the pressure class of the duct system and shall be installed according to manufacturer's specifications.
8. Drilled 1" Service Openings: Drilled 1" service openings shall be closed with materials meeting UL 181 for smoke generation and flame spread.
9. Flexible Duct Systems: Service openings shall not be made in flexible ductwork.
10. Cleaning and Restoration of HVAC Systems: HVAC systems shall be cleaned by using a suitable agitation device to dislodge contaminants from the HVAC component surface and then capturing the contaminants with a vacuum collection device.
11. Wet Cleaning, Power Washing, and Steam Cleaning: Wet cleaning, power washing, steam cleaning and any other form of wet process cleaning of HVAC system components

shall not damage or result in subsequent damage to the components. Cleaning agents or water shall never be applied to electrical, fibrous glass or other porous HVAC system components.

12. Vacuum Collection Equipment: Vacuum collection equipment shall be operated continuously during cleaning. The collection equipment shall be used in conjunction with agitation tools and other equipment to convey and collect debris and prevent cross-contamination of dislodged particulate during the mechanical cleaning process. Maintain capture velocities per NADCA 4.5.
13. Confined Space Cleaning: When working inside a confined space, health and safety concerns shall be a priority. The duct support system, internal components, configuration and confined space concerns shall be evaluated for safety prior to entry. It is recommended that a Certified Safety Professional be consulted as needed.
14. Air Duct Cleaning: Air ducts shall be cleaned to remove all non-adhered substances and shall be capable of passing NADCA cleanliness verification tests.
    a. Air ducts shall be accessed through service openings in the system that are large enough to accommodate mechanical cleaning procedures and allow for cleanliness verification.
    b. Air ducts shall be cleaned using mechanical agitation methods to remove particulate, debris, and surface contamination.
    c. Dislodge substances shall be captured with a vacuum collection device.
    d. Cleaning activities shall not damage any HVAC components.
15. Dampers: Dampers and any air-directional mechanical devices shall have their position marked prior to cleaning and shall be restored to their marked position after cleaning.
16. Registers, Grilles, Diffusers: It is recommended that all registers, grilles, diffusers, and other air distribution devices be removed if possible, properly cleaned, and shall be restored to their previous position.
17. Clean Relief and outside air intake hoods and screens.
18. Smoke and/or Fire Detection Equipment: Cleaning activities shall not impair, alter or damage any smoke and fire detection equipment located within the facility, or attached to and serving the HVAC system.
19. Post-Cleaning Inspection: If debris still remains on the coil after cleaning, the process shall be repeated.
20. Control of Odors and Product Emissions: All products used shall comply with any local, regional, state, and federal regulations and/or other laws regulating the use of such agents.
21. Remediation of Mold Contamination: Remediating mold shall be performed in accordance with the IICRC S520 Standard for Professional Mold Remediation and the cleaning/restoration of the HVAC system provisions as outlined within this Standard.
22. Surface Treatments: Surface treatments may be used to restore the integrity of material surfaces as an alternative to replacement. Surface treatments shall only be applied after confirming the system has been cleaned and has passed the specified level of cleanliness verification.
23. Removal of Mold Contaminated Porous Materials: It is recommended that porous materials with mold growth (Condition 3) be properly removed and replaced. This task shall be followed by surface cleaning using mechanical cleaning methods.
    a. The mechanical cleaning methods selected for duct liner or fibrous glass duct board shall not create abrasions, breaks, or tears to fibrous glass liner or duct board surfaces.
24. Resurfacing Fibrous Glass Surfaces: Resurfacing may be considered when thermal

acoustic fibrous glass components, including air duct liner or duct board in the HVAC system, are considered friable, or exhibit visual signs of abrasion, degradation, or other undesirable conditions. Resurfacing may also be considered when the project work plan requests smoothing fiber glass surfaces to reduce future particulate collections within the HVAC system.

a. If resurfacing is to be performed, an assessment shall be made to determine whether the surface of the component will provide a strong, bondable surface for the coating material after undergoing proper mechanical cleaning.
b. If fibrous glass materials are beyond restoration and deemed unsuitable to support the proper application of a surfacing product or unable to provide a long-term bondable surface, resurfacing shall not be performed.

25. Damaged Fibrous Glass Material: When there is evidence of damage, deterioration, delaminating, friable material, such that cleaning or resurfacing cannot restore fibrous glass materials, replacement is recommended. Call to the attention of the Engineer.
26. HVAC System Repair: HVAC components found to have pre-existing damage during the cleaning process shall be documented and brought to the attention of the Engineer.
27. After return air and exhaust air ducts have been cleaned operate the fan system at full speed for a minimum of 8 hours. Then proceed to cleaning air handler unit and supply air ductwork.
28. Allow a one week window scheduled at least 7 days prior with Engineer to inspect final cleaning of ducts and fans systems. Systems shall be selected randomly by the Engineer. Provide a technician to assist with air handler or duct access. For ductwork cleaning provide photo evidence per reference standard with reference markers as to location showing before and after conditions. If inspection of air handlers at that time is not possible provide photo documentation per referenced standard.
29. In the event that Engineer does not agree that the fan is clean method 2 from the referenced standard shall be implemented using cleaning and test equipment furnished by the duct cleaning Contractor.

END OF SECTION 233000

SECTION 233400 - HVAC FANS

PART 1 - GENERAL

1.1 DESCRIPTION

A. Provide Fans as specified herein and shown on the Drawings.

B. Equipment capacity and size as indicated in the equipment lists on the Drawings.

C. Related Work: The requirements of Section 230500, Common HVAC Materials and Methods, also apply to this section.

1.2 QUALITY ASSURANCE

A. Air Handling Equipment: Rated in accordance with AMCA certified rating procedures and AMCA labeled.

B. See Commissioning specification for additional requirements.

1.3 SUBMITTALS

A. Submit catalog data, construction details and performance characteristics for each fan.

B. Submit operating and maintenance data.

PART 2 - PRODUCTS

2.1 EXHAUST FANS AND UNITS

A. Roof Mounted Exhaust Fan (Direct Drive): Upblast style, rated for grease, curb mounted on roof; vertical shaft, direct driven, open BI wheel as shown on Drawings with EC motor; bird screen; weatherproof aluminum housing for mounting on square base; capacity as indicated on Drawings. Motor located outside the air stream. Casing to be easily removed for service. Motor and fan assembly to be mounted on rubber vibration isolators unless noted otherwise. Provide disconnect switch at fan with NEMA rating per code. Greenheck, Soler & Palau, Jen Fan, Carnes, Acme, PennBarry, Cook, Twin City or approved.

B. Roof Mounted Exhaust Fan (Direct Drive): Curb mounted on roof; vertical shaft, direct driven, open BI wheel as shown on Drawings with EC motor; bird screen; weatherproof aluminum housing for mounting on square base; capacity as indicated on Drawings. Motor located outside the air stream. Casing to be easily removed for service. Motor and fan assembly to be mounted on rubber vibration isolators unless noted otherwise. Provide with 2-postion motorized damper with the same interior frame size as the duct connection to the fan. Damper actuator by Controls Contractor. Provide disconnect switch at fan with NEMA rating per code. Greenheck, Soler & Palau, Jen Fan, Carnes, Acme, PennBarry, Cook, Twin City or approved.

PART 3 - EXECUTION

3.1 INSTALLATION

A. Install and arrange equipment as shown on the Drawings and as recommended by the equipment manufacturer.

3.2 AIR HANDLING INSTALLATION

A. Installation and Arrangement: Air handling equipment shall be installed and arranged as shown on the Drawings. Comply with the manufacturer's recommendations for installation connection and start-up.

B. Install Owner Provided Contractor Installed (OPCI) air handlers (AHU) and roof top units (RTU) on curbs provided and installed by the Contractor. Roofing modification and framing / structural enhancement of existing mechanical penthouses is under separate contract. Coordinate with the Roofing and Framing Contractor for curb location and means of installation. Use manufacture provided seismic Zee brackets between curb and AHU or RTU. Engineering for attachment of curb to roof for AHU or RTU is provided by HVAC Contractor; see section 230500 for additional requirements.

C. Lubrication: All moving and rotating parts shall be lubricated in accordance with the manufacturer's recommendations prior to start-up.

D. Air handler fan speed control devices (EC Motors) are provided with OPCI units.

E. Contractor is responsible for transportation of Owner Provided AHU and RTU. Units are currently at Owner’s Maintenance facility. Contractor is responsible for loading, hauling, unloading and setting the units. Unit damage incurred once the loading process starts until warranty period is over is the responsibility of the Contractor. Contractor is responsible for RTU or AHU complete installation including installation of hoods, attachment, power, ductwork, and piping. Controls installation is by Owners control contractor.

3.3 CONTROLS

A. Coordinate with Owner’s Control Contractor.

END OF SECTION 233400

SECTION 238000 – TERMINAL HVAC EQUIPMENT

PART 1 - GENERAL

1.1 DESCRIPTION

A. Provide Heating and Ventilating Equipment as specified herein and shown on the Drawings.

B. Equipment capacity and size shall be as indicated on the Drawings.

C. Related Work: The requirements of Section 230500, Common HVAC Materials and Methods, also apply to this section.

1.2 QUALITY ASSURANCE

A. Air Handling Equipment: Rated in accordance with AMCA certified rating procedures and AMCA labeled.

B. Air Conditioning and Refrigeration Equipment Rating: Rated in accordance with ARI certified rating procedures and ARI labeled.

1.3 SUBMITTALS

A. Submit catalog data, construction details and performance characteristics for each HVAC unit.

B. Submit operating and maintenance data.

PART 2 - PRODUCTS

2.1 CONVECTOR RADIATORS

A. Heating Elements: Convector heating elements shall be non-ferrous consisting of 3/8" diameter copper tubing and .010 tick aluminum plate fins with full-flanged collars. The tubes shall be expanded mechanically into fin collars to form a permanent thermal bond. Fins shall be protected front and back by formed shield plates running entire length of element. Headers shall be cast brass provided with bottom threaded piping connections. Heating elements shall be tested by manufacturer at 100 P.S. I. air pressure under water. Elements shall be supported from brackets on sides of cabinet which shall allow for proper pitching of the element.

B. Cabinets General: Cabinets shall be formed from cold rolled steel and shall be suitably braced and reinforced where necessary to provide stiffness, and accurately fitted to prevent air leakage. Cabinet front shall be flanged top and bottom for added rigidity. Top edge of cabinet fronts shall be smoothly formed with 3/8" inside radius. Cabinets shall be constructed from not less than 14 gauge cold rolled steel front and top and 18 gauge cold rolled steel back and sides. The front shall wrap around the sides of the cabinet and shall fasten at sides with concealed friction-fit fasteners. Air outlet louvers of Venetian type shall be in slope top. After fabrication, all cabinets shall be thoroughly cleaned, and provided with a high quality baked enamel prime coat. Accessory items shall be included as noted per job requirements.

C. Sterling, Modine, or approved.

2.2 CABINET UNIT HEATER

A. Unit Performance:
   1. Units shall carry the ARI compliance label.
   2. Units shall be safety certified in accordance with UL Standard UL1995, and ANSI Standard Z21.47.

B. Unit Construction:
   1. Unit shall be completely factory assembled, piped, wired and shipped in one piece.
   2. Cabinet shall be constructed entirely of G90 galvanized metal with the exterior constructed of 16 gauge or heavier material.
   3. The interior airside of the cabinet shall be entirely insulated on all exterior panels with 1/2" thick, fiberglass insulation.

C. Blowers:
   1. Blower(s) shall be entirely self-contained on rubber-in-shear rail.
   2. All supply air blowers shall be direct drive with EC motor.

D. Heating Coil: Non-ferrous extended surface, counterflow serpentine type with heavy gauge galvanized steel casing suitable for mounting required. Assembled with 5/8” OD x 0.020” thick copper tubes brazed to copper headers with drain and vent tappings. Copper or aluminum fins mechanically bonded to tubes and spaced a maximum of 12 fins per inch. Construction shall allow for expansion and contraction without developing leaks. Permanently label each coil in accessible location with all operating parameters.

E. Filters: Unless otherwise noted, unit to be furnished with 1" pleated throw away air filters. Filters shall be MERV 8 minimum rated.

F. Approved Manufacturers: Sterling, Modine, Dunham Bush or approved.

PART 3 - EXECUTION

3.1 INSTALLATION

A. Install and arrange equipment as shown on the Drawings and as recommended by the equipment manufacturer.

B. Piping: Refer to applicable sections for piping, ductwork, insulation, painting, etc.

C. Filters: Specified filters or approved temporary construction filters shall be installed in supply units prior to start-up or used for drying and/or temporary heat.

3.2 CONTROLS

A. Wiring: All wiring shall be in accordance with the National Electrical Code and local electrical codes.

END OF SECTION 238000

PART 1 - GENERAL

1.1 SECTION INCLUDES

A. Section Includes

1. General electrical requirements.

1.2 PERMITS, FEES AND SERVICE CHARGES

A. The CONTRACTOR shall obtain all electrical permits required to complete the work and pay all associated fees.

B. The CONTRACTOR shall coordinate and provide for the installation and operation of franchise utility service (including any telephone and/or leased lines specified) as required during construction, startup, testing, and operation of the work until substantial completion.

1.3 FIELD VERIFICATION DURING THE BIDDING PROCESS

A. The CONTRACTOR shall be responsible for performing field verification of the existing conditions prior to bidding. The nature of this work inherently requires field observation to understand the existing conditions and scope of work.

B. Failure to observe the existing conditions or ignorance of existing conditions shall the responsibility of the CONTRACTOR alone. Additional services shall not be authorized due to the CONTRACTOR'S lack of understanding of the existing conditions.

1.4 INTENT OF DRAWINGS AND SPECIFICATIONS

A. Riser and other diagrams are schematic and are intended to show the approximate location of equipment, and the general alignment of conduits and piping, and shall not be used for obtaining quantities. Dimensions given on the plans shall take precedence over scaled dimensions and all dimensions whether in figures or scaled, shall be verified in the field.

B. The electrical drawings do not show complete details of the site conditions. The CONTRACTOR shall check actual conditions.

C. The exact location of apparatus, fixtures, equipment, conduit and piping shall be ascertained by the CONTRACTOR in the field, and the work shall be laid out accordingly. Should the CONTRACTOR fail to ascertain such locations or coordinate with work performed by other trades, the work shall be changed at no additional cost to the OWNER when so ordered by the ENGINEER. The ENGINEER reserves the right to make minor changes in the location of conduit, piping and equipment up to the time of installation without additional cost to OWNER.

D. CONTRACTOR shall provide all labor, materials, equipment, machinery, and tools necessary to provide all electrical equipment specified and shown on the Drawings. All items not specified in detail or shown on the Drawings but necessary for complete installation shall be provided by the CONTRACTOR.

1.5 ELECTRICAL SYSTEMS FOR WORK DESIGNED AND SPECIFIED BY OTHERS

A. Provide all conduit, wiring, terminations, disconnects, hardware and support for all Electrical Systems within this project. Additional electrical work may be shown and specified outside of the Division 26, 27 or 28 documents. The Contractor shall be responsible for reviewing all Drawings and Specifications included within this Project. The Contractor shall be responsible for providing all electrical work within this Project, including work not shown on the Division 26, 27, or 28 Documents. The Contractor shall be responsible for coordinating and verifying that all electrical work has been provided as part of the Project.

B. The Contractor shall review the Mechanical Drawings and Specifications. Provide all electrical conduits and wiring required to comply with the Mechanical Drawings and Specifications.

C. The Contractor shall review all the other Drawings and Specifications which have electrical requirements. Provide all electrical conduits and wiring required to comply with these Drawings and Specifications.

1.6 SUBSTITUTION REQUESTS FOR MECHANICAL, HVAC, PROCESS, OR OTHER EQUIPMENT IMPACTING THE ELECTRICAL DESIGN:

A. The CONTRACTOR shall be responsible for including the cost impact to the electrical systems for substitution requests and/or value engineering for mechanical, HVAC, process, or other equipment made by other trades. The costs to the overall substitution request or value engineering solution must be included in the total number provided to the OWNER. The CONTRACTOR is responsible for coordinating the substitution requests or value engineering proposals made by other trades.

B. Any substitution request and/or value engineering solution which impacts the electrical design but does not include the costs shall be unacceptable.

C. Failure of other subcontractors to include the electrical cost impact shall not be the basis for a change order. The CONTRACTOR shall be responsible for coordinating the total costs of all substitution requests and/or value engineering solutions prior to presenting them to the ENGINEER or OWNER. When these requests are received by the ENGINEER or OWNER to review and approve, the ENGINEER and OWNER shall assume the cost impact to electrical has been included.

1.7 SUBMITTALS

A. Contractor shall submit all the product data in Division 26 at the same time. Piecemeal submittals will be rejected as incomplete.

1. The product data shall be bound in a three ring binder with tabs for each Section. The tabs shall be numbered to match the specification Section numbers. Submittals not bound and labeled as specified will be rejected as incomplete.
2. A submittal is required for each product specified. Each individual product submittal shall have the corresponding Reference Keynote Number (example - 260000.A01) typewritten in the upper right hand corner of the submittal. The submittals within each Section tab shall be in the same sequential order as they are listed in the specification Section. Submittals not containing the Reference Keynote Number will be rejected as incomplete.
3. No typical submittals will be accepted. Each submittal shall be project specific and clearly identify specifically which components or parts are being submitted for approval.

Any product submittals, such as a catalog sheet, which do not clearly identify which components or parts are being submitted for approval, will be rejected as incomplete.

B. Submittals shall be in accordance with the requirements of these Contract Documents and shall include the following:

1. Submittals shall include information and literature as required for all equipment and materials provided under this and related sections.
2. Shop Drawings: Shop drawings shall include the following along with any special requirements listed in the individual Specification Sections:

   a. Installation instructions and drawings
   b. Wiring schematics with termination point identification
   c. Motor information
   d. Materials of construction
   e. Manufacturer's name and model
   f. Manufacturer's catalog data
   g. Supplementary structural framing for electrical equipment including design loads, member size and location. When supplementary framing is indicated, verify that dimensions are suitable for the equipment furnished. Provide additional strength when equipment furnished is heavier than that specified.

3. Manufacturers' Literature: Literature indicating the compliance of the products with the Specifications shall be included with all submittals. This shall include catalogs and other descriptive bulletins. Relevant portions of the literature shall be clearly identified by highlighting or underlining.
4. Test Logs: The CONTRACTOR shall submit test logs as outlined below and as specified in subsequent electrical sections and drawings.

   a. A log of the complete results of tests for shorts and grounds for each circuit. All circuits and tests shall be clearly identified.
   b. A log of complete results of insulation resistance measurements of each circuit. All circuits and tests shall be clearly identified.

5. Operation and maintenance information for all equipment furnished and/or installed.
6. Programming instructions for any controllers or other programmable equipment. Copies of the any required software, including registration cards, shall be provided with the O&M manuals.

C. Deferred Submittals

1. Submittals for seismic bracing/anchoring and wind loads shall be a deferred submittals. Engineering of the seismic bracing and anchoring system shall be provided by a licensed Engineer in the State of Oregon. Submittals shall include calculations and drawings, including connection types/materials/sizes, load, maximum load, dimensions, etc.

D. The CONTRACTOR shall indicate on the submittals all variances from the Specifications.

E. Record Drawings. After the completion of construction, the CONTRACTOR shall provide one set of "as-built" drawings to the ENGINEER as specified herein showing the location of buried conduits and all changes or deviations from the original drawings.

F. Final inspection certificates shall be submitted prior to final payment.

1.8 COORDINATION OF WORK

A. The CONTRACTOR shall plan his work in coordination with the other trades and with the power and telephone utility authorities.

B. The CONTRACTOR shall field verify all dimensions of equipment to be installed or provided by others so that correct clearances and connections may be made between the work installed by the CONTRACTOR and equipment installed or provided by others.

C. The CONTRACTOR shall arrange all conduit runs so that they do not interfere with piping, structural members, etc.

D. All working measurements shall be taken from the sites, checked with those shown on the drawings, and if they conflict, reported to the ENGINEER at once, and before proceeding with the work. Should the CONTRACTOR fail to comply with this procedure, he shall alter his work at his own expense as directed by the ENGINEER.

E. No additional payments will be allowed where obstructions in the work of other trades, or work under this contract requires offsets to conduit runs.

F. The CONTRACTOR is responsible for all alterations in the work to accommodate equipment differing in dimensions or other characteristics from that shown or specified.

G. The CONTRACTOR shall provide all temporary power necessary for existing site equipment and for all construction needs.

1.9 SUPERVISION

A. The CONTRACTOR shall maintain adequate supervision of the work and shall have a responsible person in charge at the site during all times that work under this contract is in progress, or when necessary for coordination with other work.

1.10 CODES

A. Work shall conform to the National Electrical Code (NEC), and State Codes and other applicable codes, even though not specifically mentioned for each item. These shall be regarded as the minimum standard of quality for materials and workmanship.

1.11 CONTRACTOR'S RECORD DRAWINGS & AS-BUILTS

A. The CONTRACTOR shall maintain a neatly marked set of record drawings showing the locations of all buried conduits and other utilities encountered or installed during construction. The final locations of panels, field mounted instruments and panels, terminal boxes, junction boxes, receptacles, light switches and other materials included in the work shall be shown, as well as conduit routing between them to the extent it differs from the design drawings. Record drawings shall be kept current with the work as it progresses and shall be subject to inspection by the OWNER's Representative at any time. Failure to keep field record drawings current may result in the issuance of a stop work order or delay in the processing of pay requests until the record drawings are made current.

B. The CONTRACTOR shall provide one complete set of as-built electrical schematics for all panels and equipment provided, including PLC I/O schematics as applicable, panel elementary diagrams, interconnecting wiring diagrams, wire numbers, termination strip locations and numbers. These shall be in the same format and style as those in the Contract Documents and submittal requirements.

C. All information shown on the CONTRACTOR's field record drawings and as-built schematics shall be subject to verification by the OWNER's Representative. If significant errors or deviations are noted by the OWNER's Representative, new as-builts shall be completed at the CONTRACTOR's expense.

PART 2 - PRODUCTS

2.1 PORTABLE OR DETACHABLE PARTS

A. The CONTRACTOR shall retain in his possession and shall be responsible for all portable and detachable parts or portions of installations such as fuses, key locks, adapters, blocking chips and inserts until completion of his work.

B. These parts shall be delivered to the ENGINEER and an itemized receipt obtained. This receipt, together with 2 copies of the final inspection certificate, shall be attached to the CONTRACTOR's request for final payment.

C. All equipment shall be demonstrated to operate in accordance with the requirements of this specification and the manufacturer's recommendations.

2.2 NEW PRODUCTS

A. All products shall be new without defects and covered by Manufacturer's warranty. Products shall be re-used only where indicated on the Drawings.

B. All products shall be listed, labeled, and certified by a testing agency approved by the state of Oregon.

C. All equipment of the same type and capacity shall be by the same manufacturer.

PART 3 - EXECUTION

3.1 IDENTIFICATION

A. All identification labeling shall be in compliance with Section 260553 Electrical and Control Identification.

3.2 WORKMANSHIP & COORDINATION

A. All work shall be performed by personnel skilled in the particular trade in a workmanlike manner. Workmanship shall conform to the standards of the NEC and the National Electrical Installation Standards (NEIS).

B. The ENGINEER shall be the sole judge as to whether or not the finished work is satisfactory; and if in his judgment any material or equipment has not been properly installed or finished, the

CONTRACTOR shall replace the material or equipment whenever required, and reinstall it in a manner entirely satisfactory to the ENGINEER without any increase in cost to the OWNER.

C. The CONTRACTOR shall coordinate and verify the installation of all equipment furnished by him to other trades, or equipment provided and installed by other trades that is connected to the electrical or control systems. Work shall include the furnishing of all labor, materials, and equipment required for the installation of a complete and operable system as hereinafter specified and as indicated on the drawings. The Contract Documents are complementary and what is called for by any one shall be as binding as if called for by all. Unless otherwise specifically stipulated, the term "furnished and installed complete" shall be considered a part of this section.

D. Controls and systems shall be complete with transformers, switches, relays, contactors, control valves, control devices, instrument piping, fittings, valves, control wiring, thermometers, pressure gauges, thermostats, damper operators, miscellaneous control cabinets to fill the intent of the Specifications and shall provide control for the various units and systems. All control valves and motorized dampers shall be provided with position indicators.

E. Unless otherwise specified or shown on the drawings, switches or relays shall be installed in, or adjacent to the motor starter or other electrical device to which they are to be connected. Control and interlock wiring shall be included as necessary from breakers specified herein or shown on the drawings.

F. Each control schematic intended to control a series of motor operated louvers, fans, and thermostats shall contain a switch for maintenance to meet the NEC requirements regarding disconnect switches for motors. This switch shall be local if any unit controlled is out of sight of the switch. This switch shall disconnect all power to all motor operated devices within the circuit.

3.3 TEMPORARY HEATING, LIGHTING AND POWER

A. The CONTRACTOR shall provide all heat, lighting and power required to construct and protect the work until the work is placed in service by the OWNER for beneficial use of the OWNER. Temporary heaters shall be provided as required to keep the work area and all new electrical components dry.

B. The source for temporary power shall be from the electric utility or OWNER approved CONTRACTOR supplied auxiliary power units. The installation for electric power shall meet the requirements of local authorities and of OSHA.

C. The CONTRACTOR shall obtain all permits and pay all costs for connecting temporary power service at no expense to the OWNER.

3.4 SUPPORT BACKING

A. Provide any necessary backing required to properly support all fixtures and equipment installed under this contract.

3.5 CUTTING, PATCHING AND FRAMING

A. The CONTRACTOR shall determine in advance the locations and sizes of all sleeves, chases, and openings necessary for the proper installation of his work.

B. Whenever practical, inserts or sleeves shall be installed prior to covering work. Cutting and patching shall be held to a minimum. All required holes in concrete construction shall be made with a core drill and patched with non-metallic non-shrink grout.

C. Cutting, fitting repairing and finishing of carpentry work, metal work, or concrete work, and the like, which may be required for this work shall be done by craftsmen skilled in their respective trades. When cutting is required, it shall be done in such a manner as not to weaken walls, partitions, or floors; and holes required to be cut in floors must be drilled without breaking out around the holes.

3.6 ACCESS PANELS

A. The CONTRACTOR shall provide all access panels in hard ceilings to allow NEC-required access to junction boxes, pull boxes, and light fixtures. The CONTRACTOR shall submit to the ENGINEER for approval floor plans (1/8" = 1'-0" scale minimum) which clearly indicate proposed access panel locations.

3.7 COMMISSIONING

A. Commissioning of the facility shall be completed prior to substantial completion.

B. CONTRACTOR shall provide for realistic durations in the progress schedule for the commissioning activities.

C. Provide the labor, medium, chemicals, tools, equipment, instruments and services required for, and incidental to, completing commissioning.

D. Demonstrate satisfactory operation within the facility of the equipment and systems in actual operation as a functional unit.

E. Conduct commissioning for a period of fourteen (14) continuous days without significant interruption.

F. The commissioning verification period shall restart with the correction of each significant interruption.

G. Correct defects in material and workmanship immediately following their discovery.

H. Provide for maintenance until substantial completion. This includes the required maintenance activities during the commissioning verification period.

I. Perform maintenance pursuant to the operation and maintenance data requirements for the new facility during and following the commissioning verification period and prior to issuance of a certificate of substantial completion.

J. As of the date of substantial completion, OWNER’s staff shall be responsible for operation and maintenance of the new facilities. This excludes any issues identified as warranty matters.

3.8 TESTS

A. The CONTRACTOR shall furnish all labor, material, instruments and tools to make all connections for testing of the electrical and instrumentation installation. All equipment shall be demonstrated as operating properly prior to the acceptance of the work. All protective devices shall be operative during testing of equipment. The tests shall be made under the supervision of the ENGINEER. All deficiencies or unsatisfactory conditions as determined by the ENGINEER or inspecting authorities shall be corrected by the CONTRACTOR in a satisfactory manner at his own expense.

B. After visual inspection of joints and connections and the application of tape and other insulating materials, all sections of the entire wiring system shall be thoroughly tested for shorts and grounds. A log of results for each circuit shall be kept by the CONTRACTOR and presented to the ENGINEER.

C. A phase rotation check shall be made to demonstrate that all power receptacles, service feeders, main power feeders and auxiliary power generators have the same A - B - C phase rotation and ground relationships.

D. Equipment shall be tested by operating all electric motors, relays, controls, switches, heaters, etc., sufficiently to demonstrate proper installation and electrical connections. Control and emergency conditions shall be artificially simulated where necessary for complete system or subsystem.

3.9 CLEANING AND TOUCH-UP PAINT

A. Upon completion of work, all electrical equipment shall be cleaned.

1. Vacuum all dirt, metal shavings, and foreign materials from all enclosures. The use of compressed air shall not be acceptable.
2. All stains, dirt, and fingerprints shall be removed from switchboards, motor control centers, panelboards, light fixtures, enclosures, and all other electrical equipment covers.

B. Provide touch-up paint on equipment that has been scraped, scratched, or chipped during construction. Paint color shall match color of equipment.

END OF SECTION

PART 1 - GENERAL

1.1 SUMMARY

A. Section Includes

1. Electrical and control testing forms and requirements.

1.2 REFERENCES

A. National Fire Protection Association (NFPA):

1. 70, National Electrical Code (NEC).

1.3 SEQUENCING

A. ENGINEER shall issue written acceptance of the following certifications submitted by the CONTRACTOR before utility power is supplied to conductors, cables, or equipment.

1. Megger Test
2. Continuity Test
3. Motor Insulation Test

B. CONTRACTOR shall verify to ENGINEER that every function of the electrical, measurement, and control systems are operating properly.

PART 2 - PRODUCTS – NOT USED

PART 3 - EXECUTION

3.1 FIELD QUALITY CONTROL

A. Site Tests, Inspection

1. CONTRACTOR shall be responsible to become familiar with the test and certification requirements of the Contract Documents for this project. It is the intent of these requirements that the Work will be systematically checked to verify that the functions required or implied, work properly to insure safety for the personnel, environment, and equipment associated with the Work.
2. CONTRACTOR shall complete the certification forms that are supplemental to this section and submit the forms to ENGINEER for approval.
3. All site test and inspection certificates and schedules shall be contained in a 3-ring binder(s).

    a. Size 8½ inches by 11 inches.
    b. Paper: 20-pound minimum, white for typed pages.
    c. Three-hole punch data for binding and composition; arrange printing so that punched holes do not obliterate data.
    d. Provide each manual with title page to include “Process Electrical Testing”, typed table of contents with consecutive page numbers. Where more than one binder is used, consecutively title each with a volume number. The first binder shall be

labeled Volume 1 and consecutively numbered as required to include all test documentation.

e. Tab sections for each required section of testing and acceptance certification.

4. CONTRACTOR shall notify ENGINEER seven days in advance of scheduled testing and facilitate the witnessing of those tests by ENGINEER.
5. CONTRACTOR shall provide ENGINEER with current as-built documentation for electrical and measurement and control commissioning with submittal of test certification.

   a. Systems operating at or above 200-volts to ground or more shall be included in the Megger Test Certification. Minimum duration for each test shall be one minute, at 1000 VDC, and minimum acceptable results shall be 50 mega ohms.
   b. Conductors and cables shall be included in the Continuity Test Certification. No continuity to ground is the only acceptable result of the test.
   c. Conductors, cables, or equipment failing to meet the minimum requirements shall be replaced with new. Repair will not be acceptable.
   d. Each individual instrument shall have an Instrument Calibration Certificate. The calibration shall operate within the tolerances specified by the manufacturer of the instrument and the Contract Documents.
   e. Installed motors shall have a written Motor Insulation Certificate for all the motors listed in the Drawings for the Work. Motors failing test shall be tagged and locked out from operation.

3.2 SUPPLEMENTS

A. Schedule 260108 - A; Megger Test Certificate.

B. Schedule 260108 - B; Continuity Test Certificate

END OF SECTION

SUPPLEMENT 260108 - A
MEGGER TEST CERTIFICATE

		Project Number:
Test Equipment Manufacturer:	Model Number:	Project Name:
Test Equipment Last Calibration Date:	Serial Number:	Accepted By: Date:
Testing Personnel:	Calibration Certificate	Drawing Reference:
Test Voltage:	Test Date:	Title:
		Tag:

Title	Tag Identification	A-Ø/ B-Ø	A- Ø / C- Ø	A- Ø / Ground	B- Ø / Ground	C- Ø / Ground	A- Ø / Neutral	B- Ø / Neutral	C- Ø / Neutral

SUPPLEMENT 260108 - A
MEGGER TEST CERTIFICATE

		Project Number: *12345*
Test Equipment Manufacturer: *APC*	Model Number: *GH-1*	Project Name: *Water Diversion*
Test Equipment Last Calibration Date: *8/13/02*	Serial Number: *346321*	Accepted By: *S.E. Davis* Date: *01/01/2003*
Testing Personnel: *John Doe*	Calibration Certificate: *Yes*	Drawing Reference: *E-006*
Test Voltage: *1000 Volts*	Test Date: *12/17/02*	Title: *Power Distribution Diagram*
		Tag: *016*

Title	Tag Identification	A-Ø/ B-Ø	A- Ø / C- Ø	A- Ø / Ground	B- Ø / Ground	C- Ø / Ground	A- Ø / Neutral	B- Ø / Neutral	C- Ø / Neutral
Main Feeder	*016-CO3*	∞	∞	∞	∞	∞	∞	∞	∞
PNL-07	*016-CO7*	∞	∞	∞	∞	∞	∞	∞	∞
PNL-12	*016-C12*	∞	∞	∞	∞	∞	∞	∞	∞

SUPPLEMENT 260108 - B
CONTINUITY TEST CERTIFICATE

		Project Number:
Test Equipment Manufacturer:	Model Number:	Project Name:
Test Equipment Last Calibration Date:	Serial Number:	Accepted By: Date:
Testing Personnel:	Calibration Certificate:	Drawing Reference:
	Test Date:	Title:
		Tag:

Permanent Tag Number	Function	Temporary Tag Number	Device ID Number	Ohms to Ground

SUPPLEMENT 260108 - B
CONTINUITY TEST CERTIFICATE

		Project Number: *12345*
Test Equipment Manufacturer: *Fluke*	Model Number: *53G*	Project Name: *Water Division*
Test Equipment Last Calibration Date: *Unknown*	Serial Number: *638842*	Accepted By: *S.E. Davis* Date: *01/01/2003*
Testing Personnel: *John Doe*	Calibration Certificate: *No*	Drawing Reference: *E-501*
	Test Date: *12/30/02*	Title: *Conduit Schedule*

Permanent Tag Number	Function	Temporary Tag Number	Device ID Number	Ohms to Ground
016-34-PNL	*Level Indicator*	*34*	*016-34*	∞

PART 1 - GENERAL

1.1 SUMMARY

A. Section Includes.

1. The section includes the requirements for conductors and cables used to conduct potentials of 600 volts and less.
2. All conductors and cables shall be installed in conduit or approved raceways regardless of which Division the conductors or cables are specified.

1.2 REFERENCES

A. The following is a list of Standards which may be referenced in the Section.

1. American Society for Testing and Materials (ASTM).

    a. B8, Standard Specification for Concentric-Lay-Stranded Copper Conductors, Hard, Medium-Hard or Soft.

2. National Electrical Contractors Association, Inc. (NECA): National Electrical Installation Standards (NEIS).
3. National Electrical Manufacturers Association (NEMA).

    a. WC 3, Rubber-Insulated Wire and Cable for the Transmission and Distribution of Electrical Energy.
    b. WC 5, Thermoplastic Insulated Wire and Cable for the Transmission and Distribution of Electrical Energy.
    c. WC 7, Cross Linked-Thermostetting Polyethylene Wire and Cable for the Transmission and Distribution of Electrical Energy.
    d. WC 55, Instrumentation Cables and Thermocouple Wire.

4. National Fire Protection Association (NFPA). 70, National Electrical Code (NEC).
5. Underwriters Laboratories, Inc. (UL).

    a. 13, Standard for Power-Limited Circuit Cables.
    b. 44. Standard for Safety Rubber-Insulated Wires and Cables.
    c. 62, Standard for Safety Flexible Cord and Fixture Wire.
    d. 510, Standard for Safety Insulating Tape.
    e. 854, Standard for Safety Service-Entrance Cables.
    f. 910, Standard for Safety Test Method for Fire and Smoke Characteristics of Electrical and Optical Fiber Cables Used in Air Handling Spaces.
    g. 1277, Standard for Safety Electrical Power and Control Tray Cables.
    h. 1581, Standard for Safety References for Electrical Wires, Cables and Flexible Cords.

1.3 SUBMITTALS

A. Contractor shall submit all the product data in Division 26 at the same time. Piecemeal submittals will be rejected as incomplete.

1. The product data shall be bound in a three ring binder with tabs for each Section. The tabs shall be numbered to match the specification Section numbers. Submittals not bound and labeled as specified will be rejected as incomplete.
2. A submittal is required for each product specified. Each individual product submittal shall have the corresponding Reference Keynote Number (example - 260519.C01) typewritten in the upper right hand corner of the submittal. The submittals within each Section tab shall be in the same sequential order as they are listed in the specification Section. Submittals not containing the Reference Keynote Number will be rejected as incomplete.
3. No typical submittals will be accepted. Each submittal shall be project specific and clearly identify specifically which components or parts are being submitted for approval. Any product submittals, such as a catalog sheet, which do not clearly identify which components or parts are being submitted for approval, will be rejected as incomplete.

B. Product Data.

1. Pursuant to Section 01300 Submittal Procedures.
2. Manufacturer's data including materials of construction, weight, and related information for each item specified in PART 2 PRODUCTS.

PART 2 - PRODUCTS

2.1 MATERIALS

A. **Single Conductors (260519.C01).**

1. Conductors shall be rated for 600 volts and conform to applicable requirements of NEMA.
2. Conductors shall be stranded copper.
3. Insulation type shall be THWN-2.
4. Conductors shall be sized per the Drawings and the NEC, whichever is greater.
5. Rome Cable Corporation, Southwire Company, Okonite Company, or approved equal.

B. **Tray Cable (260519.C02)**

1. UL Listed as 600-volt type Tray Cable, TC-ER.
2. CSA FT4 70,000 BTU flame test.
3. Rated for sunlight resistance, oil resistant, and direct bury.
4. XHHW insulation.
5. Multi-conductor cable with copper wiring and grounding conductor, size as shown on the Drawings.
6. Belden or equal.

2.2 ACCESSORIES

A. **Colored Tape (260519.T01).**

1. Colored tape shall be used to identify individual conductors larger than # 6 AWG.
2. 3M colored tape, or approved equal.

B. **Cable Ties (260519.T05).**

1. Cable ties shall be nylon, adjustable, self-locking, and properly sized for the bundle and force implied.
2. Thomas and Betts, Panduit, or approved equal.

C. **Pulling Compound (260519.P01).**

1. Pulling compound shall be non-corrosive, noncombustible, nonflammable waxed based lubricant listed for this use.
2. Ideal Company, Polywater, Inc., or approved equal.

PART 3 - EXECUTION

3.1 INSTALLATION

A. General.

1. All identification labeling shall be in compliance with Section 260553 Electrical and Control Identification.
2. The use of MC-type cable shall not be permitted.
3. Conductor and cable installations shall meet or exceed the NECA National Electrical Installation Standards.
4. CONTRACTOR shall not exceed the manufacturer's recommendations for maximum pulling tensions or minimum bending radii for respective conductors or cables.
5. Pulling compound is recommended for all conductor or cable installations and shall be used on all installations requiring a mechanical pulling device.
6. CONTRACTOR shall furnish and use a dynamometer on all conductor or cable installations requiring the use of a mechanical pulling device. The dynamometer shall be used to verify the maximum pulling tensions are not exceeded. Should the pulling tensions be exceeded, the conductor or cable shall be removed from the raceway and discarded. It shall not be reused under any circumstance on the project. The CONTRACTOR shall be responsible to make the alterations necessary before attempting to re-pull new conductors or cables.
7. Immediately after pulling in conductors or cables, the pulling compound shall be completely removed from the conductors or cables, from boxes, enclosures, floors, walls, etc.
8. Conductor and cable installations shall be continuous without splices or intermediate terminations unless specifically identified on the Drawings or prior written approval from the ENGINEER.
9. Where conductors or cables are routed in boxes enclosures or cable tray they shall be neatly bundled with cable ties at intervals not to exceed 12 inches on center. The tension for the cable ties shall be set with a tool specifically manufactured for that purpose and of the same manufacturer as the cable tie. Side cutters, linemen pliers and similar tools shall not be used to cut the tail end of the cable tie. The CONTRACTOR shall only use the tool specifically manufactured for this purpose and of the same manufacturer as the cable tie.
10. Conductors and cables shall not be installed until the raceway, boxes, enclosures, conduit bushings, etc. have all been installed. Where conductors or cables have been installed prior to meeting this requirement, the ENGINEER shall at their discretion elect to have the conductors or cables removed, disposed of and replaced with new product.
11. Should the outer jacket of any conductor or cable be damaged in any way, they shall be removed, disposed of and replaced with new product.

12. An equipment grounding conductor shall be installed in all raceways. Size shall be as identified on the Drawings or the NEC, whichever is greater, but in no case shall it be less than # 16 AWG for under 50 volts and no less than # 14 for 50 volts or above.

END OF SECTION

PART 1 - GENERAL

1.1 SUMMARY

A. Section Includes:

1. This section includes requirements pertaining to electrical equipment anchoring and electrical equipment hanging and support.

1.2 SUBMITTALS

A. Contractor shall submit all the product data in Division 26 at the same time. Piecemeal submittals will be rejected as incomplete.

1. The product data shall be bound in a three ring binder with tabs for each Section. The tabs shall be numbered to match the specification Section numbers. Submittals not bound and labeled as specified will be rejected as incomplete.
2. A submittal is required for each product specified. Each individual product submittal shall have the corresponding Reference Keynote Number (example - 260529.H01) typewritten in the upper right hand corner of the submittal. The submittals within each Section tab shall be in the same sequential order as they are listed in the specification Section. Submittals not containing the Reference Keynote Number will be rejected as incomplete.
3. No typical submittals will be accepted. Each submittal shall be project specific and clearly identify specifically which components or parts are being submitted for approval. Any product submittals, such as a catalog sheet, which do not clearly identify which components or parts are being submitted for approval, will be rejected as incomplete.

B. Product Data.

1. Pursuant to Section 01300 Submittal Procedures.
2. Manufacturer’s data including materials of construction, equipment weight and related information for each item specified in PART 2 PRODUCTS.
3. Seismic calculations and drawings.

PART 2 - PRODUCTS

2.1 MATERIALS

A. **Hot Dipped Galvanized Hardware (260529.H11)**.

1. Bolts shall be hot dipped galvanized steel and sized for the load served and have a hex head unless specifically specified otherwise elsewhere.
2. Nuts shall be hot dipped galvanized steel hex nut.
3. Washers shall be hot dipped galvanized steel, USS pattern flat washers.
4. Split lock washers shall be hot dipped galvanized steel.
5. Threaded rods and couplings shall be hot dipped galvanized steel.
6. Eye-bolts, u-bolts, bent-bolts and similar connecting hardware shall be hot dipped galvanized steel.

B. **Galvanized Hardware (260529.H12)**

1. Shall be similar to 260529.H11, except finish shall be regular galvanized in lieu of hot dipped galvanized.

C. **Hot Dipped Galvanized Anchors (260529.A11)**.

1. Wedge or stud anchors installed in concrete or masonry shall be hot dipped galvanized steel and sized for the load served.
2. Toggle type fasteners shall only be used in hollow sheetrock wall. The wing part of the fastener may be mild steel, but the bolt shall be hot dipped galvanized steel.

D. **Galvanized Anchors (260529.A12)**

1. Shall be similar to 260529.A11, except finish shall be regular galvanized in lieu of hot dipped galvanized.

E. **Hot Dipped Galvanized Beam Clamps (260529.B11)**.

1. Beam clamps shall be hot dipped galvanized steel and sized for the load served.

F. **Galvanized Beam Clamps (260529.B12)**

1. Beam clamps shall be regular galvanized and sized for the load served.

G. **Hot Dipped Galvanized Strut Channel (260529.S01)**.

1. Strut channel shall be hot dipped galvanized after fabrication and shall be a minimum of 12 gauge.
2. Strut channel shall have factory pre-drilled holes.

H. **Galvanized Strut Channel (260529.S02)**

1. Shall be similar to 260529.S01, except finish shall be regular galvanized in lieu of hot dipped galvanized.

2.2 SEISMIC BRACING

A. **Seismic Anchoring and Bracing Products (260529.S90)**

1. Provide seismic bracing for the vertical and lateral restraint of all conduits, conduit racks, raceways, cable trays, required by the International Building Code and Oregon Structural Specialty Code.

PART 3 - EXECUTION

3.1 INSTALLATION

A. General.

1. Hardware shall be set to a torque as recommended by the manufacturer.
2. Washers and split lock washers shall be installed on all bolts, threaded rods and anchors.
3. Lead or plastic type anchors are prohibited from use on the project.

4. When threaded rods are installed in drop-in type anchors, a washer, split lock washer and a jamb nut shall be installed at the anchor to ensure stability.
5. When channel (strut) is installed as a hanger or support from threaded rod, washers, split lock washers and jamb nuts shall be installed on both sides of the strut to lock it in place.
6. Cut ends of channel, strut, threaded rods or other cut fittings shall be filed smooth before installation.
7. Cut ends of hot dipped galvanized channel and strut shall be coated with three coats of cold galvanizing compound after the channel has been filed to prohibit rust.
8. Concrete anchors shall be installed as per the manufacturer's directions and set using the manufacturer's supplied tool.
9. Threaded rod shall not extend more than one (1) inch beyond the channel, strut or other material it is supporting.
10. Hangers and supports shall be installed level and plumb.
11. Hangers and supports shall be installed per the National Electrical Code, Building Code and Structural Code and shall be designed to safely support the load. The ENGINEER may request the CONTRACTOR provide a copy of their design calculations for the seismic requirements and the load served.

B. Indoor and Outdoor Installation

1. Hot dipped galvanized products shall be used in all outdoor locations.
2. Regular galvanized products shall be used in all indoor locations.

C. Seismic Anchoring and Bracing

1. The design of the seismic anchoring and bracing system shall be by a licensed Structural Engineer in the State of Oregon. The CONTRACTOR shall arrange and pay for the services of the licensed Engineer.
2. Wet stamped and signed calculations and drawing of the seismic anchoring and bracing system shall be submitted to the Architect and Engineer for review and approval.

END OF SECTION

PART 1 - GENERAL

1.1 SUMMARY

A. Section Includes

1. The Section includes the requirements pertaining to conduits and fittings used to contain electrical conductors and cables.
2. All conductors and cables shall be installed in conduit or approved raceways regardless of which Division the conductors or cables are specified.

1.2 REFERENCES

A. The following is a list of standards which may be referenced in this Section.

1. American National Standards Institute (ANSI).

   a. C80.1, Rigid Steel Conduit-Zinc Coated.

2. American Society for Testing Materials (ASTM).

   a. A123 E1, Standard Specification for Zinc-Coated (Galvanized) Coatings on Iron and Steel Products.

3. National Electrical Contractors Association (NECA).

   a. National Electrical Installation Standards (NEIS).

4. National Electrical Manufacturers Association (NEMA).

   a. TC 3, PVC Fittings for use with Rigid PVC Conduit and Tubing.
   b. TC 6, PVC and ABS plastic Utilities Duct for Underground Installation.

5. Nation Fire Protection Association (NFPA).

   a. 70, National Electrical Code (NEC).

6. Underwriters Laboratories, Inc. (UL).

   a. 6, Standard for Safety Rigid Metal Conduit.
   b. 514B, Standards for Safety Fittings for Conduit and Outlet Boxes.
   c. 651, Standard for Safety Schedule 40 and 80 PVC Conduit.
   d. 651A, Standard for Safety Type EB and Rigid PVC Conduit and HDPE Conduit.
   e. 1660, Standard for Safety Liquid-Tight Flexible Nonmetallic Conduit.
   f. 360, Standard for Safety Liquid-Tight Flexible Metallic Conduit.
   g. 797, Standard for Safety Electrical Metallic Conduit.

1.3 SUBMITTALS

A. Product data

1. Contractor shall submit all the product data in Division 26 at the same time. Piecemeal submittals will be rejected as incomplete.
2. The product data shall be bound in a three ring binder with tabs for each Section. The tabs shall be numbered to match the specification Section numbers. Submittals not bound and labeled as specified will be rejected as incomplete.
3. A submittal is required for each product specified. Each individual product submittal shall have the corresponding Reference Keynote Number (example - 260501.S01) typewritten in the upper right hand corner of the submittal. The submittals within each Section tab shall be in the same sequential order as they are listed in the specification Section. Submittals not containing the Reference Keynote Number will be rejected as incomplete.
4. No typical submittals will be accepted. Each submittal shall be project specific and clearly identify specifically which components or parts are being submitted for approval. Any product submittals, such as a catalog sheet, which do not clearly identify which components or parts are being submitted for approval, will be rejected as incomplete.
5. Pursuant to Section 01 33 00 Submittal Procedures.
6. Manufacturer's data including materials of construction, equipment weight and related information for each item specified in PART 2 PRODUCTS.

PART 2 - PRODUCTS

2.1 MATERIALS

A. **Liquid-Tight Flexible Steel Conduit (LFSC) (260533.C25).**

1. Shall be constructed of a flexible steel core with a sunlight resistant thermoplastic outer jacket.
2. Provide galvanized conduit fittings.
3. No couplings shall be installed.
4. Sealing rings shall be installed where conduit terminates at an enclosure.
5. Conduit shall be Anaconda, Electriflex, T & B, or approved equal.

B. **EMT Conduit (260533.C50).**

1. EMT conduit may be used in all indoor and outdoor locations. In outdoor locations the fittings shall be watertight compression fittings. Set screw fittings shall be acceptable in indoor locations.
2. Conduit connectors shall have insulated throats, plastic bushings or ground bushing installed.

C. **Galvanized Sheet Metal Boxes (260553.B15).**

1. Shall comply with NEMA specifications for sheet metal boxes.
2. All boxes shall be deep. No shallow boxes shall be permitted.
3. Provide mud rings or industrial covers for the devices installed and a depth to match the sheetrock where applicable.

D. **Cast Aluminum Boxes (260553.B55)**.

1. Shall be cast aluminum boxes, have tapered threaded hubs and be the deep FD type in all cases.

2. Boxes shall have internal grounding screw.
3. Shall have external mounting tabs.
4. Whichever manufacturer is submitted and approved, all like boxes on Project shall be of the same manufacturer.
5. Provide OZ Gedney, Crouse-Hinds, or approved equal.

2.2 ACCESSORIES

A. **Firestopping (260533.F90)**

1. Shall be as specified in Division 07 Specifications.
2. Shall be Listed for the conduit, raceway or box being installed.
3. Install per the Manufacturer's instructions.

PART 3 - EXECUTION

3.1 INSTALLATION

A. General Requirements

1. Install conduit runs in accordance with the schematic representation shown on the Drawings.
2. Minimum conduit size shall be .75 inch unless specifically called out otherwise on the drawings.
3. Where raceways are indicated, but the routing is not identified, the routing shall be the CONTRACTOR'S choice and in accordance with the rest of the Contract Documents and the National Electrical Code (NEC).
4. Raceways shall be electrically and mechanically complete before the conductors are installed.
5. Routing of conduits may be adjusted to avoid obstructions. Coordinate with other trades prior to installation of raceways. Lack of such coordination shall not be justification for extra compensation and removal and reinstallation to resolve conflicts shall be at the CONTRACTOR's expense.
6. Conduit joints shall be wrench tight, thoroughly grounded, secure and free of obstructions.
7. Conduits shall be reamed.
8. Exposed conduits shall be installed parallel or perpendicular to the structural members and surfaces and shall be level and or plumb.
9. When two or more conduits are routed in the same general direction their routing shall be parallel with symmetrical bends.
10. Conduits shall be bent with equipment specifically designed for this purpose and for the specific size and type of conduit.
11. Conduits that are creased or crushed shall be replaced.
12. Install conduits such that they do not interfere with the proper and safe operation of equipment and do not block or otherwise interfere with the ingress and egress and installation of removable hatches and covers.
13. Install expansion joints as needed across expansion joints in the structure and at other locations where necessary to compensate for thermal or mechanical expansion or contraction.
14. Conduits shall be routed at least six (6) inches from high temperature piping, ducts and flues.

15. Final connections to dry type transformers, motors, instruments and other equipment requiring a flexible connection shall be made with LFSC conduit. Lengths shall not exceed three (3) feet.
16. All conduits shall be capped throughout construction to prevent entrance of dirt, trash, water, etc.
17. All power conduits routed to or from an adjustable frequency drive or a variable frequency drive shall be metallic conduit.
18. Spare conduits shall be provided with a coupling and threaded male plug that matches the makeup of the conduit for the area they are installed in. The conduit shall terminate at an enclosure when one is called out and exists as part of the Work. Where the spare conduit is stubbed up in a concrete slab for future equipment, it shall be installed flush with the finished floor. Where spare conduits are routed to other areas such as outside a building envelope, in an attic, to a vault, etc., the conduit shall have a female conduit cap installed.

B. Boxes

1. Install boxes and enclosures in accordance with the schematic representation as indicated on the Drawings.
2. Boxes and enclosures shall be mounted level and plumb.
3. Boxes and enclosures shall not be altered, holes drilled, etc. in any way that may compromise the NEMA rating of the enclosure or box.
4. Boxes and enclosures shall be bonded the equipment grounding conductor.
5. Provide a divider whenever a box contains conductors of different potentials that the code requires separation.
6. Surface mounted enclosures and boxes shall be spaced off the surface at least 1/4 inch in damp or wet locations.
7. Enclosures shall be provided whenever a junction or pull box larger than 4 inches square is required.
8. Sheet metal boxes are permitted only in locations where EMT conduit is approved.
9. Enclosures shall be labeled with a nameplate as specified in Section 26 05 53 – Identification for Electrical Systems. The nameplate shall match the callout on the Drawings. If no callout exists, the CONTRACTOR is responsible to meet with the ENGINEER and develop a list of pull box, junction box and termination box nomenclature and their as-built Drawings shall reflect these callouts.
10. Install vaults and in-ground box tops (lids) such that they are ½ inch above finished grade to prevent water ingress.

END OF SECTION

PART 1 - GENERAL

1.1 SUMMARY

A. Section Includes

1. Requirements for identification of electrical, safety, measurement, data, fire alarm, security, monitoring, control and related components and equipment.

1.2 SUBMITTALS

A. Contractor shall submit all the product data in Division 16 at the same time. Piecemeal submittals will be rejected as incomplete.

1. The product data shall be bound in a three ring binder with tabs for each Section. The tabs shall be numbered to match the specification Section numbers. Submittals not bound and labeled as specified will be rejected as incomplete.
2. A submittal is required for each product specified. Each individual product submittal shall have the corresponding Reference Keynote Number (example - 260553.S21) typewritten in the upper right hand corner of the submittal. The submittals within each Section tab shall be in the same sequential order as they are listed in the specification Section. Submittals not containing the Reference Keynote Number will be rejected as incomplete.
3. No typical submittals will be accepted. Each submittal shall be project specific and clearly identify specifically which components or parts are being submitted for approval. Any product submittals, such as a catalog sheet, which do not clearly identify which components or parts are being submitted for approval, will be rejected as incomplete.

B. Product Data

1. Pursuant to Section 01330 – Submittal Procedures.
2. The initial submittal shall contain all the products, samples and data base specified. An initial submittal that does not contain all the specified data shall be returned as incomplete.

C. Samples

1. Provide a sample of each type and size of nameplate, label, tag and means of attachment specified for approval by the OWNER.

D. Quality Assurance / Quality Control Submittals

1. The CONTRACTOR shall be responsible for submitting a data base of all identification nameplates, labels, panel schedules and tags required for the Work. The data base shall be developed in the most current edition of Microsoft Excel for the OWNER's future use.

E. Closeout Submittals

1. Pursuant to Section 01780 – Closeout Submittals.

PART 2 - PRODUCTS

2.1 MATERIALS

A. **Circuit Breaker Panel Schedules (260553.S21)**.

1. Shall be created in Microsoft Excel software. One copy of each schedule shall be included in the closeout submittals.
2. Shall be printed on 60 - 70 lb white card stock.

B. **Plastic Nameplates (260553.P05)**.

1. Shall have a black background with white engraved letters. Nameplates for emergency functions shall be red background with white engraved letters. The nameplates shall have self adhesive rated for the environment which they are installed. The font type shall be consistent on all nameplates.
2. Provide products supplied by E.R. Perry Signs & Engraving, or approved equal.
3. and centered on the tag. The hole shall be large enough that the chain will not bind in the hole.
4. Provide products supplied by E.R. Perry Signs & Engraving, or approved equal.

C. **Conductor and Cable Identification Sleeves (260553.T31)**.

1. The identification sleeves shall be properly sized for the cable or conductor.
2. Shall be adhesive style.
3. Sleeves shall be white with black machine generated characters.
4. Provide Brady wire and cable sleeves, or approved equal.

D. **Conductor Color Coding (260553.C89)**.

1. Conductors shall be colored as specified in the table below. The technical specification requirements for the conductors are specified elsewhere.

Conductor Color Coding

System	Conductor	Color
All Systems	Equipment Grounding	Green
IT / Data	Data Cable Sheath (outer cover)	Reference Division 27
24 Volt DC	Positive	Blue
	Negative	White w/Blue Stripe
	Discrete Input Line (hot leg) Side	Blue
	Discrete Input Switch Leg	Blue w/White Stripe
	Discrete Output Line (hot leg) Side	Blue
	Discrete Output Switch Leg	Blue w/Orange Stripe
24 Volt AC	Hot Leg	Red
	Neutral	White
	Discrete Input Line (hot leg) Side	Red
	Discrete Input Switch Leg	Red w/Blue Stripe
120 Volt AC Control	Hot Leg	Red
	Neutral	White
	Discrete Input Line (hot leg) Side	Red
	Discrete Input Switch Leg	Red w/White Stripe
	Discrete Output Line (hot leg) Side	Red

System	Conductor	Color
	Discrete Output Switch Leg	Red w/Orange Stripe
120/240 Volt Single Phase	Hot Leg # 1	Black
	Hot Leg # 2	Red
	Neutral	White
120/208 Volt Three Phase	Phase A	Black
	Phase B	Red
	Phase C	Blue
	Neutral	White
120, 208, 277 Volt	Switch Legs	Pink
480 Volt Three Phase	Phase A	Brown
Wye or Delta Corner Tap	Phase B	Orange
	Phase C	Yellow
	Neutral	Gray
120/240 Delta Three Phase	Phase A	Brown
	Phase B	Orange
	Phase C	Yellow
	Neutral	Gray

PART 3 - EXECUTION

3.1 INSTALLATION

A. Circuit Breaker Panel Schedules

1. CONTRACTOR shall request panel schedules in Microsoft Excel software and printing instructions from ENGINEER. CONTRACTOR shall update the panel schedules to reflect as-built conditions. Print schedules on 60 - 70 lb white card stock with black ink.
2. Schedules shall be neatly trimmed with 1/8" white space borders.
3. The finished schedules shall be laminated and neatly trimmed with 1/8" of laminate border.
4. A sample layout shall be submitted to OWNER for approval prior to installation.

B. Plastic Nameplates

1. Provide plastic nameplates for panelboards, motor control centers, motor starters, disconnects, variable frequency drives, control panels and similar equipment. The verbiage on the nameplate shall be as identified on the Contract Drawings. The CONTRACTOR shall request the required verbiage from the ENGINEER should it not be available on the Contract Drawings.
2. In addition to the nameplate identifying the equipment, a second nameplate shall be provided that identifies the source of power for the equipment i.e. “Fed From PNL208-1”.
3. Typically the nameplates shall be centered and installed near the top of the equipment.
4. Nameplates shall be black with white characters unless specified otherwise.
5. Nameplates on emergency panels shall be red with white characters.

C. Conductor and Cable Identification Sleeves

1. Provide adhesive, machine generated, white labels with black characters for all cables and conductors. Explanation is provided below on how various systems shall be identified. In many cases the information necessary to develop the unique identification labels will be provided on the Contract Drawings. The verbiage required for the identification shall be as identified on the Contract Drawings. The CONTRACTOR shall request the required verbiage from the ENGINEER should it not be available or clear based on the information provided on the Contract Drawings.
2. The labels shall be installed between 6 to 8 inches from the end. Conductors shall be labeled at all splices and points of termination.
3. Power conductors and cables, including the neutral and the ground conductors shall all be identified individually. The identification label will be developed as follows: The first set of characters will be the equipment code identifying the source of power “PNL208” followed by the circuit number “CKT 12”. For example, the label would read “PNL208-CKT 12”.

D. Device and Faceplate Identification Labels

1. Devices, faceplates, small electrical boxes 4 inches or less located indoors and similar equipment shall be identified utilizing flexible identification tape. Typically the CONTRACTOR shall provide machine generated, white labels with black characters except as specified otherwise. Explanation is provided below on how various systems shall be identified. In many cases the information necessary to develop the unique identification labels will be provide on the Contract Drawings. The verbiage required for the identification shall be as identified on the Contract Drawings. The CONTRACTOR shall request the required verbiage from the ENGINEER should it not be available or clear based on the information provided on the Contract Drawings.
2. Power receptacles faceplates (cover plates) shall state the panel and circuit number. A typical label might read “PNL208-1-CKT 15”.
3. Light switches faceplate shall state the panel and circuit number(s). A typical label might read “PNL208-2-CKT 15&17”.
4. Interior emergency light fixtures shall have a unique 0.5 inch adhesive dot applied to facilitate tracking routine maintenance required for emergency lighting. The dots shall be red when they have an integral battery back-up.

END OF SECTION

PART 1 - GENERAL

1.1 SUMMARY

A. Section Includes.

1. This Section includes the requirements for wiring devices such as receptacles, toggle switches and devices plates.

1.2 REFERENCES

A. The following is a list of Standards which may be references in the Section.

1. National Electrical Contractors Association (NECA): National Electrical Installation Standards (NEIS).
2. National Electrical Manufacturers Association (NEMA).

   a. WD1 – General Requirements for Wiring Devices.
   b. WD6 – Wiring Device Dimensional Requirements.

3. National Fire Protection Association (NFPA): 70.
4. Underwriters Laboratories, Inc. (UL): 1070.

1.3 SUBMITTALS

A. Contractor shall submit all the product data in Division 26 at the same time. Piecemeal submittals will be rejected as incomplete.

1. The product data shall be bound in a three ring binder with tabs for each Section. The tabs shall be numbered to match the specification Section numbers. Submittals not bound and labeled as specified will be rejected as incomplete.
2. A submittal is required for each product specified. Each individual product submittal shall have the corresponding Reference Keynote Number (example - 262726.R01) typewritten in the upper right hand corner of the submittal. The submittals within each Section tab shall be in the same sequential order as they are listed in the specification Section. Submittals not containing the Reference Keynote Number will be rejected as incomplete.
3. No typical submittals will be accepted. Each submittal shall be project specific and clearly identify specifically which components or parts are being submitted for approval. Any product submittals, such as a catalog sheet, which do not clearly identify which components or parts are being submitted for approval, will be rejected as incomplete.

B. Product Data.

1. Pursuant to Section 01300 Submittal Procedures.
2. Manufacturer’s data including materials of construction, equipment weight, and related information for each item specified in PART 2 PRODUCTS.

PART 2 - PRODUCTS

2.1 MATERIALS

A. **General Purpose Receptacles (262726.R01).**

1. Shall be heavy duty specification grade, two-pole, three wire grounding type with screw type terminals suitable for number 10 American Wire Gauge (AWG).
2. Shall be NEMA 5-20R, rated for 20 amperes, 125 volt configuration.
3. Provide duplex or single receptacles as shown on the Drawings.
4. Shall be white in color unless fed from an emergency circuit and in that case the receptacle shall be red in color.
5. Provide Hubbell BR20 Commercial Specification Grade receptacles, or approved equal.

B. **Ground Fault Circuit Interrupter Receptacles (262726.R10).**

1. Shall be heavy duty hospital grade, tamper-resistant, weather-resistant two-pole, three wire grounding type with screw type terminals suitable for number 10 American Wire Gauge (AWG).
2. Shall be NEMA 5-20R, rated for 20 amperes, 125 volt configuration.
3. Provide duplex or single receptacles as shown on the Drawings.
4. Shall be white in color unless fed from an emergency circuit and in that case the receptacle shall be red in color.
5. Provide Hubbell GFR8300S or approved equal. Red receptacles shall be sample model number except for color designation.

C. **Motor Rated Toggle Switches (262726.M01)**

1. Shall be extra heavy duty AC Manual Motor Controllers series with grounding screw, 30 or 60 amperes, 600 volt rated.
2. Single throw, double pole, three pole toggle switches shall be used as a local disconnect for HVAC equipment.
3. Shall be black in color.
4. Provide Hubbell, or approved equal

D. **Weatherproof Receptacle Device Plates (262726.P11).**

1. Weatherproof receptacle device plates shall be provided as shown on the drawings and in all locations that may be subjected to damp or wet conditions.
2. Weatherproof receptacle device plates shall be in-use type weatherproof receptacle device plates that allow for weatherproof protection even when a cord is plugged into the device.
3. Weatherproof receptacle device plates shall be metallic.
4. Weatherproof receptacle device plates shall be gasketed.
5. Weatherproof receptacle device plates shall be lockable.
6. Weatherproof receptacle device plates shall be UL Listed.
7. The device plate shall be PVC-coated and of a similar design when installed on PVC-coated boxes.
8. Provide Red Dot model CKMUV, or approved equal.

PART 3 - EXECUTION

3.1 INSTALLATION

A. General.

1. All identification labeling shall be in compliance with Section 260553 Electrical and Control Identification.
2. Devices shall be bonded to their enclosure and the equipment grounding conductor with a separate grounding conductor attached to the device which will allow the device to be detached from the enclosure without disconnecting the equipment grounding conductor from the enclosure.
3. The use of the mounting yoke as the only method for bonding is unacceptable.
4. Devices that are not installed at the end of the line (circuit) shall be pig-tailed out and the pig-tails shall be connected to the line and load conductors.
5. After the pigtailed conductors are terminated on the device and before it is installed in the enclosure the exposed energized parts shall be wrapped with electrical insulating tape with a minimum of three wraps.
6. As the device is installed in the enclosure, care shall be taken to neatly fold the conductors inside the enclosure so as to not kink, bind or otherwise damage the sheath of the conductors.
7. Terminations on all devices shall be via pressure or compression type connectors. Wrapping conductors around a termination screw and tightening is unacceptable.
8. Mounting heights for receptacles shall be 18 inches to center from finished floor unless called out otherwise on the Drawings or specified at different height to meet minimum code requirements. Where countertops are present, receptacles shall be mounted horizontally and mounted 4 inches to center above the back-splash. The CONTRACTOR is responsible to coordinate with the approved casework submittals. Failure to do so will require the CONTRACTOR to relocate devices at their expense.
9. Mounting height for switches shall be 42 inches to center above finished grade unless called out otherwise on the Drawings or specified at different height to meet minimum code requirements. Where countertops are present, switches shall be mounted 5 inches to center above the back-splash. The CONTRACTOR is responsible to coordinate with the approved casework submittals. Failure to do so will require the CONTRACTOR to relocate devices at their expense.
10. Coordination is the responsibility of the CONTRACTOR. If a conflict exists for the mounting location of devices, the CONTRACTOR shall bring it to the ENGINEER's attention during the rough-in phase and the ENGINEER shall provide direction. Failure to coordinate conflicts during the rough-in phase will result in relocation of devices at the CONTRACTOR's expense.
11. All receptacles fed from emergency panels shall be red in color.
12. Devices shall be installed level and plumb. Devices shall be brought out plumb with the wall surface via UL listed spacers approved for this purpose if necessary.
13. Devices shall be tested for voltage, polarity, ground integrity and in the case of GFCI receptacles, that they operate as intended.
14. The position of devices, as shown on the Drawings, are general locations only unless dimensioned. The CONTRACTOR is responsible to coordinate with various trades to ensure no conflict exists.

END OF SECTION

PART 1 - GENERAL

1.1 SUMMARY

A. Section includes the following enclosed low voltage components rated at 600 VAC or less:

1. Heavy duty single throw, fused, safety switch.

1.2 REFERENCES

A. National Fire and Protection Association (NFPA)

1. 70 - National Electrical Code (NEC)

B. National Electrical Manufacturers Association (NEMA).

1. B 3-2001 - Molded Case Circuit Breakers and Their Application.
2. AB 4-2001 - Guidelines for Inspection and Preventive Maintenance of Molded Case Circuit Breakers Used in Commercial and Industrial Applications.
3. KS 1-2001 - Enclosed and Miscellaneous distribution Equipment Switches (600 Volts Maximum).

1.3 SUBMITTALS

A. Contractor shall submit all the product data in Division 16 at the same time. Piecemeal submittals will be rejected as incomplete.

1. The product data shall be bound in a three ring binder with tabs for each Section. The tabs shall be numbered to match the specification Section numbers. Submittals not bound and labeled as specified will be rejected as incomplete.
2. A submittal is required for each product specified. Each individual product submittal shall have the corresponding Reference Keynote Number (example - 262813.S21) typewritten in the upper right hand corner of the submittal. The submittals within each Section tab shall be in the same sequential order as they are listed in the specification Section. Submittals not containing the Reference Keynote Number will be rejected as incomplete.
3. No typical submittals will be accepted. Each submittal shall be project specific and clearly identify specifically which components or parts are being submitted for approval. Any product submittals, such as a catalog sheet, which do not clearly identify which components or parts are being submitted for approval, will be rejected as incomplete.

B. Product Data

1. Pursuant to Section 01300 - Submittals.
2. Manufacturer's data including materials of construction, equipment weight, and related information for each item specified in PART 2 PRODUCTS.

C. Shop Drawings

1. Back panel and enclosure layouts including interior and exterior front and side exterior view details showing maximum overall dimensions.

2. For enclosure weighing 150 pounds and over, provide physical properties, handling and mounting data including total weight, lifting instructions, height, and floor space required. Mounting requirements for seismic zone 4.
3. All drawings shall list the equipment number.
4. Component designations, shall match those shown on the Drawings.

D. Quality Assurance/Control Submittals

1. Manufacturer's Instructions

a. List special requirements or restrictions of the motor/load combination.
b. Submit copy of the manufacturer's operating and maintenance manuals and, installation instructions.

1.4 QUALITY ASSURANCE

A. Regulatory Requirements

1. Products shall be UL listed.

1.5 DELIVERY, STORAGE, AND HANDLING

A. Storage and Protection

1. Products shall be stored and installed in a dry environment maintained at 65 degrees F or above.

PART 2 - PRODUCTS

2.1 MANUFACTURED UNITS

A. **Heavy Duty Non-Fused Safety Switch (262813.S21).**

1. Heavy Duty Non-Fused Safety switches shall be provided as shown on the Drawings
2. Heavy Duty Non-Fused Safety switches shall be rated for the load served and shall switch all the phase conductors.
3. Heavy Duty Non-Fused Safety switches shall include separate, unswitched, neutral and ground buses where applicable.
4. Heavy Duty Non-Fused Safety switches shall be fused type and provided with appropriate fuses for the application and AIC rating.
5. Heavy Duty Non-Fused Safety switch enclosures shall be painted steel, NEMA 3R, outdoor, surface mount for outdoor installations and NEMA 12 surface mount for indoor installations
6. Heavy Duty Non-Fused Safety switch ground bus shall be large enough to accommodate terminations for all grounding conductors.
7. Provide Eaton, or approved equal.

PART 3 - EXECUTION

3.1 INSTALLATION

A. All identification labeling shall be in compliance with Section 260553 Electrical and Control Identification.

B. Install switches and circuit breakers as indicated on the Drawings.

C. Install equipment level and plumb.

D. Provide nameplates as indicated on the Drawings.

END OF SECTION

ANDERSON SHIRLEY ARCHITECTS
695 COMMERCIAL ST. SE SUITE 5 SALEM, OR 97301
OFFICE: 503-371-1148 FAX: 503-364-6751

REGISTERED ARCHITECT
JOHN M. SHIRLEY
SALEM, OREGON
STATE OF OREGON

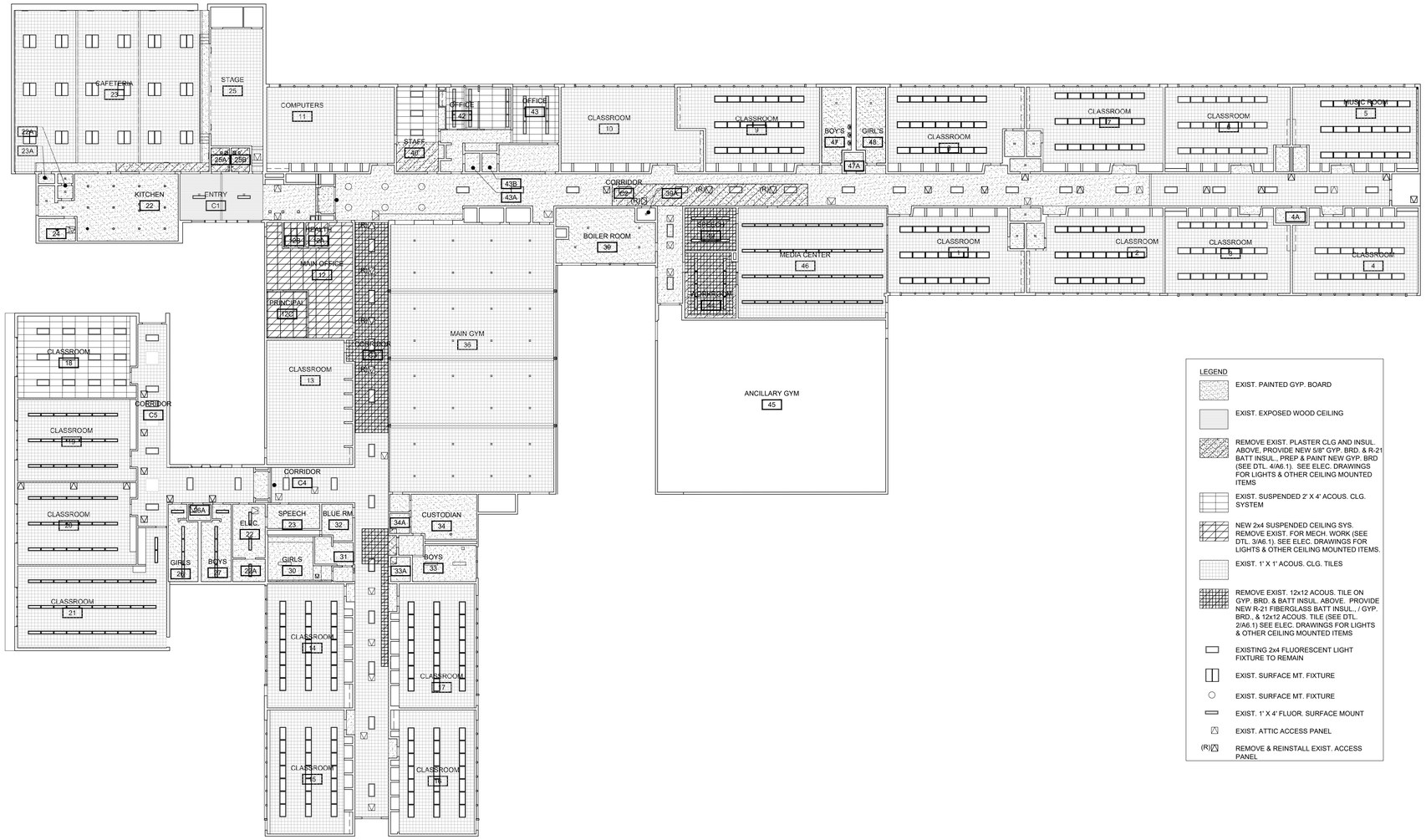

LEGEND

- EXIST. PAINTED GYP. BOARD
- EXIST. EXPOSED WOOD CEILING
- REMOVE EXIST. PLASTER CLG AND INSUL. ABOVE, PROVIDE NEW 5/8" GYP. BRD. & R-21 BATT INSUL., PREP & PAINT NEW GYP. BRD (SEE DTL. 4/A6.1). SEE ELEC. DRAWINGS FOR LIGHTS & OTHER CEILING MOUNTED ITEMS
- EXIST. SUSPENDED 2' X 4' ACOUS. CLG. SYSTEM
- NEW 2x4 SUSPENDED CEILING SYS. REMOVE EXIST. FOR MECH. WORK (SEE DTL. 3/A6.1). SEE ELEC. DRAWINGS FOR LIGHTS & OTHER CEILING MOUNTED ITEMS.
- EXIST. 1' X 1' ACOUS. CLG. TILES
- REMOVE EXIST. 12x12 ACOUS. TILE ON GYP. BRD. & BATT INSUL. ABOVE. PROVIDE NEW R-21 FIBERGLASS BATT INSUL., / GYP. BRD., & 12x12 ACOUS. TILE (SEE DTL. 2/A6.1) SEE ELEC. DRAWINGS FOR LIGHTS & OTHER CEILING MOUNTED ITEMS
- EXISTING 2x4 FLUORESCENT LIGHT FIXTURE TO REMAIN
- EXIST. SURFACE MT. FIXTURE
- EXIST. SURFACE MT. FIXTURE
- EXIST. 1' X 4' FLUOR. SURFACE MOUNT
- EXIST. ATTIC ACCESS PANEL
- (R) REMOVE & REINSTALL EXIST. ACCESS PANEL

1 A6.1 REFLECTED CEILING PLAN
SCALE: 1/16" = 1'-0"

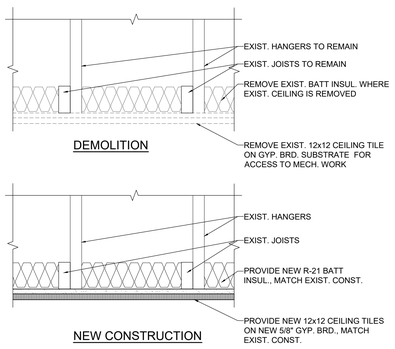

2 A6.1 12x12 CEILING TILES
SCALE: 1 1/2" = 1'-0"

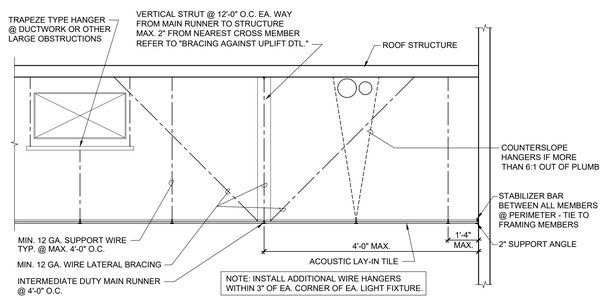

3 A6.1 TYPICAL CEILING SUPPORT DETAIL
SCALE: NOT TO SCALE

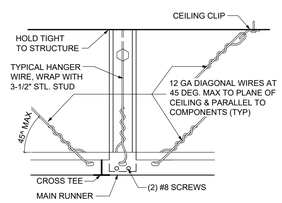

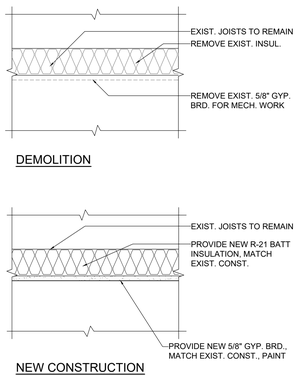

4 A6.1 GYPSUM BOARD CEILING
SCALE: 1 1/2" = 1'-0"

Date: 10-16-2020 PERMIT SET
Proj No: 10064
Drawn By: DMM ANDERSON SHIRLEY ARCHITECTS
Chkd By: JMS ANDERSON SHIRLEY ARCHITECTS
DSGN By:
Acad File:

SUNRISE ELEMENTARY SCHOOL
MECHANICAL EQUIPMENT REPLACEMENT
730 SE 19TH AVE
ALBANY OREGON 97322

MFIA INC.
Consulting Engineers
2007 S.E. Ash St.
Portland, OR 97214
PHN: (503) 234-0548
FAX: (503) 234-0677
WWW.MFIA-ENG.COM

SHEET
A6.1
OF 19

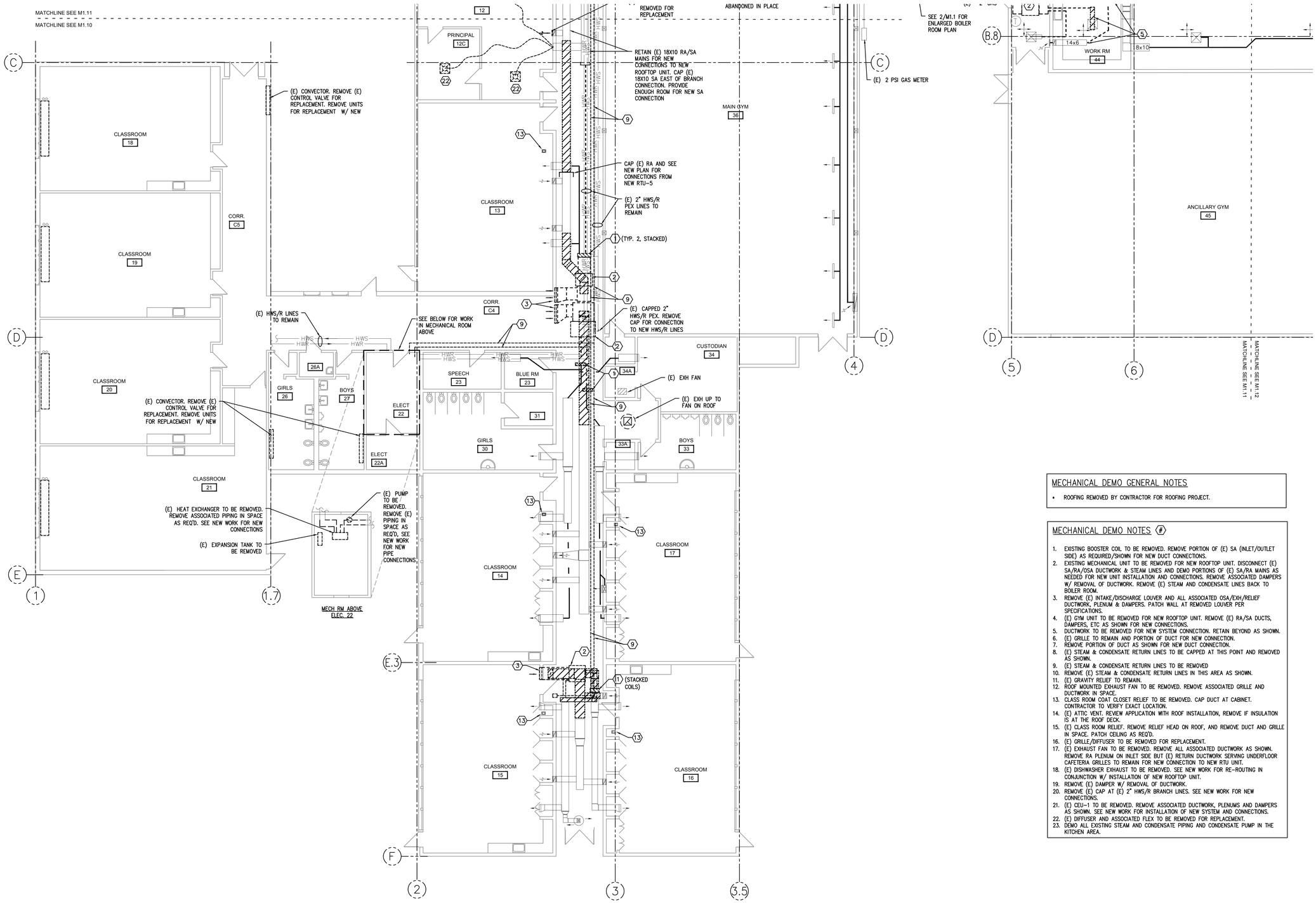

1 M1.0 MECHANICAL DEMO PLAN – NW
SCALE: 1/8"=1'-0"

MECHANICAL DEMO GENERAL NOTES

- ROOFING REMOVED BY CONTRACTOR FOR ROOFING PROJECT.

MECHANICAL DEMO NOTES

1. EXISTING BOOSTER COIL TO BE REMOVED. REMOVE PORTION OF (E) SA (INLET/OUTLET SIDE) AS REQUIRED/SHOWN FOR NEW DUCT CONNECTIONS.
2. EXISTING MECHANICAL UNIT TO BE REMOVED FOR NEW ROOFTOP UNIT. DISCONNECT (E) SA/RA/OSA DUCTWORK & STEAM LINES AND DEMO PORTIONS OF (E) SA/RA MAINS AS NEEDED FOR NEW UNIT INSTALLATION AND CONNECTIONS. REMOVE ASSOCIATED DAMPERS W/ REMOVAL OF DUCTWORK. REMOVE (E) STEAM AND CONDENSATE LINES BACK TO BOILER ROOM.
3. REMOVE (E) INTAKE/DISCHARGE LOUVER AND ALL ASSOCIATED OSA/EXH/RELIEF DUCTWORK, PLENUM & DAMPERS. PATCH WALL AT REMOVED LOUVER PER SPECIFICATIONS.
4. (E) GYM UNIT TO BE REMOVED FOR NEW ROOFTOP UNIT. REMOVE (E) RA/SA DUCTS, DAMPERS, ETC AS SHOWN FOR NEW CONNECTIONS.
5. DUCTWORK TO BE REMOVED FOR NEW SYSTEM CONNECTION. RETAIN BEYOND AS SHOWN.
6. (E) GRILLE TO REMAIN AND PORTION OF DUCT FOR NEW CONNECTION.
7. REMOVE PORTION OF DUCT AS SHOWN FOR NEW DUCT CONNECTION.
8. (E) STEAM & CONDENSATE RETURN LINES TO BE CAPPED AT THIS POINT AND REMOVED AS SHOWN.
9. (E) STEAM & CONDENSATE RETURN LINES TO BE REMOVED
10. REMOVE (E) STEAM & CONDENSATE RETURN LINES IN THIS AREA AS SHOWN.
11. (E) GRAVITY RELIEF TO REMAIN.
12. ROOF MOUNTED EXHAUST FAN TO BE REMOVED. REMOVE ASSOCIATED GRILLE AND DUCTWORK IN SPACE.
13. CLASS ROOM COAT CLOSET RELIEF TO BE REMOVED. CAP DUCT AT CABINET. CONTRACTOR TO VERIFY EXACT LOCATION.
14. (E) ATTIC VENT. REVIEW APPLICATION WITH ROOF INSTALLATION, REMOVE IF INSULATION IS AT THE ROOF DECK.
15. (E) CLASS ROOM RELIEF. REMOVE RELIEF HEAD ON ROOF, AND REMOVE DUCT AND GRILLE IN SPACE. PATCH CEILING AS REQ'D.
16. (E) GRILLE/DIFFUSER TO BE REMOVED FOR REPLACEMENT.
17. (E) EXHAUST FAN TO BE REMOVED. REMOVE ALL ASSOCIATED DUCTWORK AS SHOWN. REMOVE RA PLENUM ON INLET SIDE BUT (E) RETURN DUCTWORK SERVING UNDERFLOOR CAFETERIA GRILLES TO REMAIN FOR NEW CONNECTION TO NEW RTU UNIT.
18. (E) DISHWASHER EXHAUST TO BE REMOVED. SEE NEW WORK FOR RE-ROUTING IN CONJUNCTION W/ INSTALLATION OF NEW ROOFTOP UNIT.
19. REMOVE (E) DAMPER W/ REMOVAL OF DUCTWORK.
20. REMOVE (E) CAP AT (E) 2" HWS/R BRANCH LINES. SEE NEW WORK FOR NEW CONNECTIONS.
21. (E) CEU-1 TO BE REMOVED. REMOVE ASSOCIATED DUCTWORK, PLENUMS AND DAMPERS AS SHOWN. SEE NEW WORK FOR INSTALLATION OF NEW SYSTEM AND CONNECTIONS.
22. (E) DIFFUSER AND ASSOCIATED FLEX TO BE REMOVED FOR REPLACEMENT.
23. DEMO ALL EXISTING STEAM AND CONDENSATE PIPING AND CONDENSATE PUMP IN THE KITCHEN AREA.

REGISTERED PROFESSIONAL ENGINEER
17884
JULY 25, 1989
SCOTT W. MILLER
EXPIRES: 31DEC20

Date:	10-16-2020 PERMIT SET
Proj No:	10054
Drawn By:	JHB
Chkd By:	SWM
DSGN By:	SWM
Acad File:	

SUNRISE ELEMENTARY SCHOOL
MECHANICAL EQUIPMENT REPLACEMENT
730 SE 19TH AVE
ALBANY OREGON 97322

MECHANICAL DEMO PLAN

MFIA INC.
Consulting Engineers
2007 S.E. Ash St.
Portland, OR 97214
PHN: (503) 234-0548
FAX: (503) 234-0677
WWW.MFIA-ENG.COM

SHEET
M1.0

MECHANICAL DEMO GENERAL NOTES

- ROOFING REMOVED BY CONTRACTOR FOR ROOFING PROJECT.

MECHANICAL DEMO NOTES (#)

1. EXISTING BOOSTER COIL TO BE REMOVED. REMOVE PORTION OF (E) SA (INLET/OUTLET SIDE) AS REQUIRED/SHOWN FOR NEW DUCT CONNECTIONS.
2. EXISTING MECHANICAL UNIT TO BE REMOVED FOR NEW ROOFTOP UNIT. DISCONNECT (E) SA/RA/OSA DUCTWORK & STEAM LINES AND DEMO PORTIONS OF (E) SA/RA MAINS AS NEEDED FOR NEW UNIT INSTALLATION AND CONNECTIONS. REMOVE ASSOCIATED DAMPERS W/ REMOVAL OF DUCTWORK. REMOVE (E) STEAM AND CONDENSATE LINES BACK TO BOILER ROOM.
3. REMOVE (E) INTAKE/DISCHARGE LOUVER AND ALL ASSOCIATED OSA/EXH/RELIEF DUCTWORK, PLENUM & DAMPERS. PATCH WALL AT REMOVED LOUVER PER SPECIFICATIONS.
4. (E) GYM UNIT TO BE REMOVED FOR NEW ROOFTOP UNIT. REMOVE (E) RA/SA DUCTS, DAMPERS, ETC AS SHOWN FOR NEW CONNECTIONS.
5. DUCTWORK TO BE REMOVED FOR NEW SYSTEM CONNECTION. RETAIN BEYOND AS SHOWN.
6. (E) GRILLE TO REMAIN AND PORTION OF DUCT FOR NEW CONNECTION.
7. REMOVE PORTION OF DUCT AS SHOWN FOR NEW DUCT CONNECTION.
8. (E) STEAM & CONDENSATE RETURN LINES TO BE CAPPED AT THIS POINT AND REMOVED AS SHOWN.
9. (E) STEAM & CONDENSATE RETURN LINES TO BE REMOVED
10. REMOVE (E) STEAM & CONDENSATE RETURN LINES IN THIS AREA AS SHOWN.
11. (E) GRAVITY RELIEF TO REMAIN.
12. ROOF MOUNTED EXHAUST FAN TO BE REMOVED. REMOVE ASSOCIATED GRILLE AND DUCTWORK IN SPACE.
13. CLASS ROOM COAT CLOSET RELIEF TO BE REMOVED. CAP DUCT AT CABINET. CONTRACTOR TO VERIFY EXACT LOCATION.
14. (E) ATTIC VENT. REVIEW APPLICATION WITH ROOF INSTALLATION, REMOVE IF INSULATION IS AT THE ROOF DECK.
15. (E) CLASS ROOM RELIEF. REMOVE RELIEF HEAD ON ROOF, AND REMOVE DUCT AND GRILLE IN SPACE. PATCH CEILING AS REQ'D.
16. (E) GRILLE/DIFFUSER TO BE REMOVED FOR REPLACEMENT.
17. (E) EXHAUST FAN TO BE REMOVED. REMOVE ALL ASSOCIATED DUCTWORK AS SHOWN. REMOVE RA PLENUM ON INLET SIDE BUT (E) RETURN DUCTWORK SERVING UNDERFLOOR CAFETERIA GRILLES TO REMAIN FOR NEW CONNECTION TO NEW RTU UNIT.
18. (E) DISHWASHER EXHAUST TO BE REMOVED. SEE NEW WORK FOR RE-ROUTING IN CONJUNCTION W/ INSTALLATION OF NEW ROOFTOP UNIT.
19. REMOVE (E) DAMPER W/ REMOVAL OF DUCTWORK.
20. REMOVE (E) CAP AT (E) 2" HWS/R BRANCH LINES. SEE NEW WORK FOR NEW CONNECTIONS.
21. (E) CEU-1 TO BE REMOVED. REMOVE ASSOCIATED DUCTWORK, PLENUMS AND DAMPERS AS SHOWN. SEE NEW WORK FOR INSTALLATION OF NEW SYSTEM AND CONNECTIONS.
22. (E) DIFFUSER AND ASSOCIATED FLEX TO BE REMOVED FOR REPLACEMENT.
23. DEMO ALL EXISTING STEAM AND CONDENSATE PIPING AND CONDENSATE PUMP IN THE KITCHEN AREA.

BOILER ROOM DEMO GENERAL NOTE

- COORD. W/ SHEETROCK CONTRACTOR TO PATCH BOILER ROOM CEILING TO MATCH ADJACENT SURFACES

BOILER ROOM DEMO NOTES: (X)

(A. 400 MBH LOCHINVAR FTXL SERIES BOILER TO BE SALVAGED FOR NEW HYDRONIC SYSTEM AS B-1. REMOVE EXISTING FLUE AND VENT PIPING TO EXTERIOR OF BUILDING. BOILER WILL BE RELOCATED.

(B. (E) 500 MBH LOCHINVAR FTXL SERIES BOILER STORED IN SPACE. RETAIN FOR NEW HYDRONIC SYSTEM AS B-3.

(C. (E) 199 MBH, 100 GAL. GAS WATER HEATER TO BE REMOVED. REMOVE 'B' VENT THRU ROOF.

(D. (E) DOMESTIC WATER HEATER EXPANSION TANK TO BE SALVAGED. REMOVE ALL GAS PIPING.

(E. DEMO (E) CONDENSATE RETURN PUMP (120V, 7.2 AMPS)

(F. (E) 1675 MBH INPUT, 1342 MBH OUTPUT CAST IRON STEAM BOILER TO BE REMOVED. REMOVE EXISTING STACK THRU ROOF. REMOVE ALL ASSOCIATED PIPING AND CONTROL DEVICES. REMOVE HOUSE-KEEPING PAD.

(G. STEAM SYSTEM CHEMICAL TREATMENT SYSTEM TO BE REMOVED. REMOVE ALL ASSOCIATED PIPING.

(H. ¾" RP VALVE TO BE SALVAGED FOR NEW HYDRONIC SYSTEM.

(I. BOILER SYSTEM MAKE-UP WATER PRESSURE REDUCING STATION TO REMAIN.

(J. DOMESTIC HOT WATER RECIRCULATION PUMP TO BE REMOVED FOR REPLACEMENT. CONSULT OWNER PRIOR TO DEMO OR SALVAGE.

(K. B&G 80 SERIES PUMP TO BE REMOVED. SALVAGE TO OWNER.

(L. GRUNDFOS UPS 32-80F PUMP, SALVAGE TO OWNER.

(M. BOILER SYSTEM MAKE-UP WATER / FEED WATER UNIT TO BE REMOVED. REMOVE ALL ASSOCIATED PIPING.

(N. CONTROL COMPRESSOR AND AIR DRYER TO BE REMOVED. REMOVE ALL ASSOCIATED PIPING AND TUBING.

(O. PUMP VFD, SALVAGE TO OWNER.

(P. PIPE RACK FOR CONTROL CONDUITS, BOILER VENTS, AND POWER CONDUITS TO BE RETAINED. REMOVED DEVICES AND PIPING IN RACK NO LONGER USED.

(Q. EXISTING HWR/S LINES TO BE REMOVED FROM THIS POINT TO BOILER ROOM. SEE NEW WORK FOR NEW CONNECTIONS.

(R. (E) 36X24 RA ON CEILING TO REMAIN. SEE MEZZANINE ABOVE FOR CONTINUED WORK.

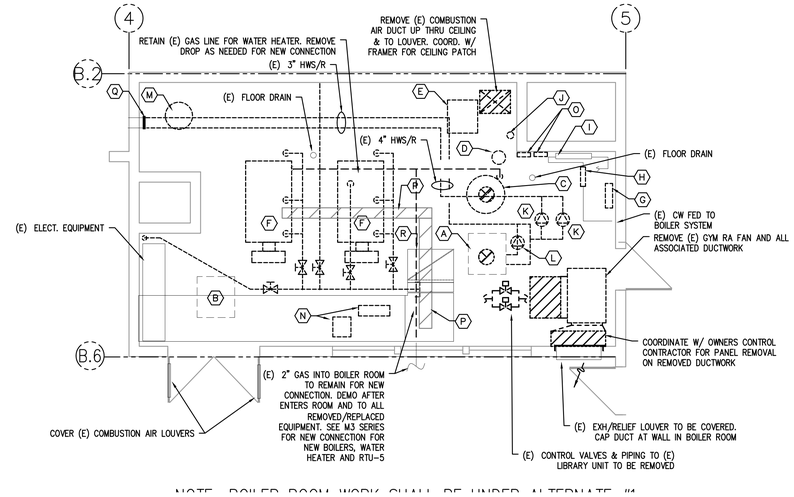

NOTE: BOILER ROOM WORK SHALL BE UNDER ALTERNATE #1

2 / M1.1 BOILER RM 39 DEMO PLAN
SCALE: 1/4"=1'-0"

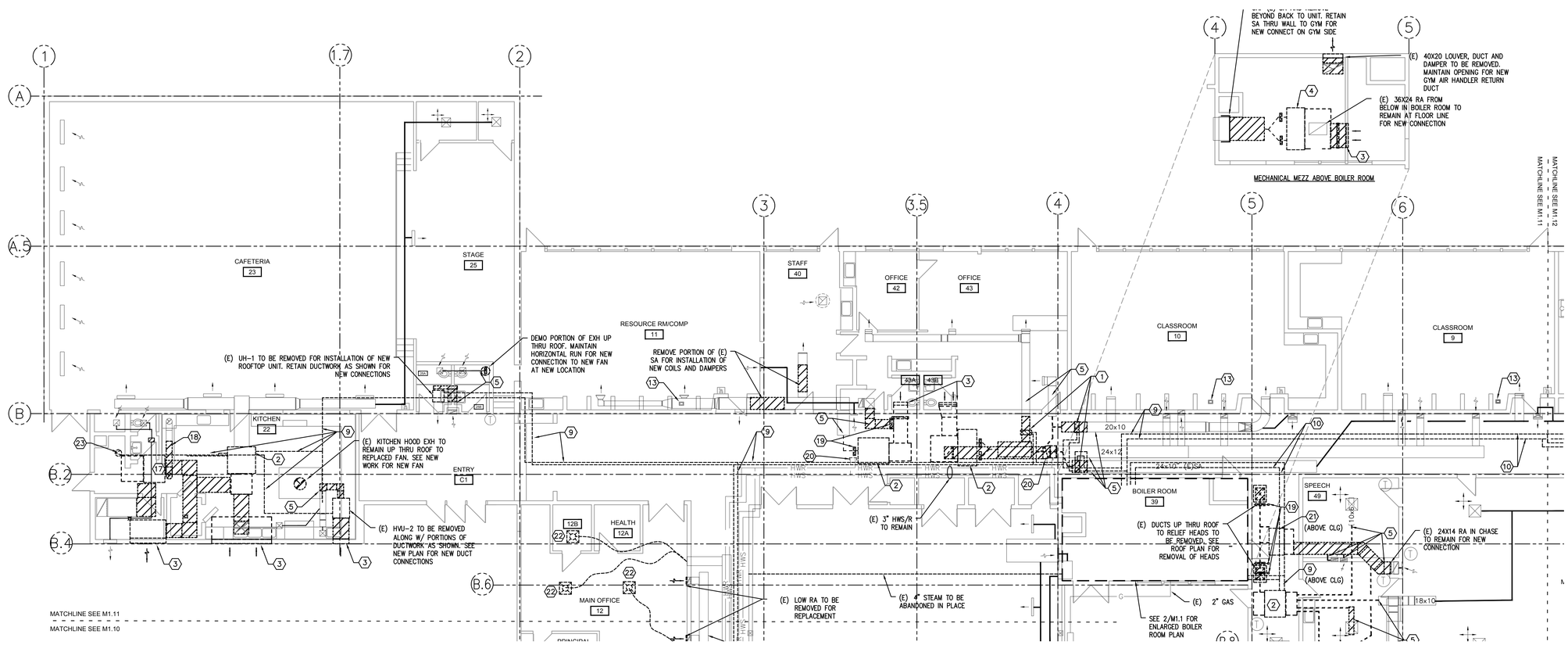

1 / M1.1 MECHANICAL DEMO PLAN – NE
SCALE: 1/8"=1'-0"

REGISTERED PROFESSIONAL ENGINEER 17884 JULY 25, 1989 SCOTT W. MILLER
EXPIRES: 31DEC20

Date:	10-16-2020 PERMIT SET
Proj No:	10064
Drawn By:	JHB
Chkd By:	SWM
DSGN By:	SWM
Acad Files:	

SUNRISE ELEMENTARY SCHOOL
MECHANICAL EQUIPMENT REPLACEMENT
730 SE 19TH AVE
ALBANY OREGON 97322

MECHANICAL DEMO PLAN

MFIA INC.
Consulting Engineers
2007 S.E. Ash St.
Portland, OR 97214
PHN: (503) 234-0549
FAX: (503) 234-0677
WWW.MFIA-ENG.COM

SHEET
M1.1

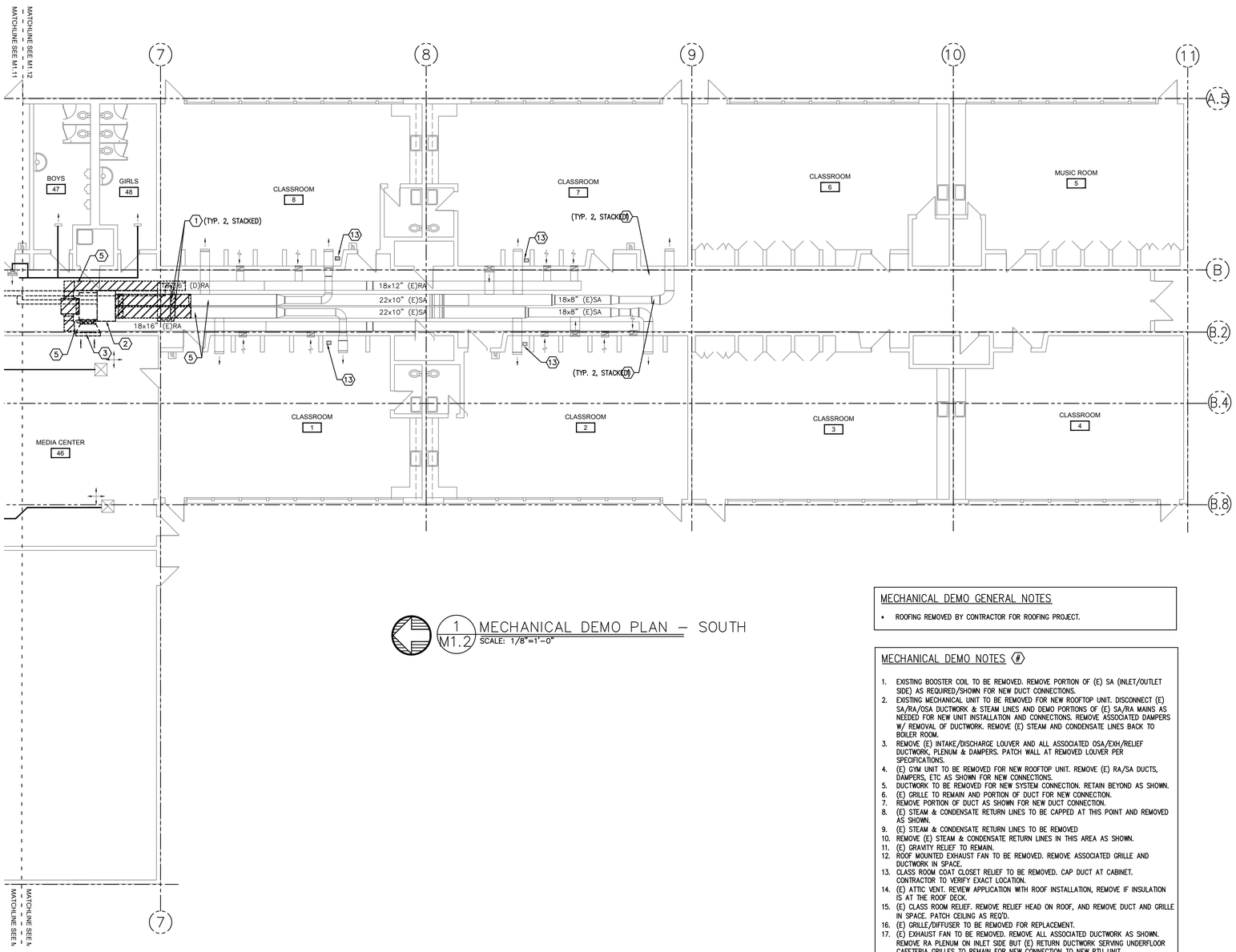

1 M1.2 MECHANICAL DEMO PLAN – SOUTH
SCALE: 1/8"=1'-0"

MECHANICAL DEMO GENERAL NOTES

- ROOFING REMOVED BY CONTRACTOR FOR ROOFING PROJECT.

MECHANICAL DEMO NOTES (#)

1. EXISTING BOOSTER COIL TO BE REMOVED. REMOVE PORTION OF (E) SA (INLET/OUTLET SIDE) AS REQUIRED/SHOWN FOR NEW DUCT CONNECTIONS.
2. EXISTING MECHANICAL UNIT TO BE REMOVED FOR NEW ROOFTOP UNIT. DISCONNECT (E) SA/RA/OSA DUCTWORK & STEAM LINES AND DEMO PORTIONS OF (E) SA/RA MAINS AS NEEDED FOR NEW UNIT INSTALLATION AND CONNECTIONS. REMOVE ASSOCIATED DAMPERS W/ REMOVAL OF DUCTWORK. REMOVE (E) STEAM AND CONDENSATE LINES BACK TO BOILER ROOM.
3. REMOVE (E) INTAKE/DISCHARGE LOUVER AND ALL ASSOCIATED OSA/EXH/RELIEF DUCTWORK, PLENUM & DAMPERS. PATCH WALL AT REMOVED LOUVER PER SPECIFICATIONS.
4. (E) GYM UNIT TO BE REMOVED FOR NEW ROOFTOP UNIT. REMOVE (E) RA/SA DUCTS, DAMPERS, ETC AS SHOWN FOR NEW CONNECTIONS.
5. DUCTWORK TO BE REMOVED FOR NEW SYSTEM CONNECTION. RETAIN BEYOND AS SHOWN.
6. (E) GRILLE TO REMAIN AND PORTION OF DUCT FOR NEW CONNECTION.
7. REMOVE PORTION OF DUCT AS SHOWN FOR NEW DUCT CONNECTION.
8. (E) STEAM & CONDENSATE RETURN LINES TO BE CAPPED AT THIS POINT AND REMOVED AS SHOWN.
9. (E) STEAM & CONDENSATE RETURN LINES TO BE REMOVED
10. REMOVE (E) STEAM & CONDENSATE RETURN LINES IN THIS AREA AS SHOWN.
11. (E) GRAVITY RELIEF TO REMAIN.
12. ROOF MOUNTED EXHAUST FAN TO BE REMOVED. REMOVE ASSOCIATED GRILLE AND DUCTWORK IN SPACE.
13. CLASS ROOM COAT CLOSET RELIEF TO BE REMOVED. CAP DUCT AT CABINET. CONTRACTOR TO VERIFY EXACT LOCATION.
14. (E) ATTIC VENT. REVIEW APPLICATION WITH ROOF INSTALLATION, REMOVE IF INSULATION IS AT THE ROOF DECK.
15. (E) CLASS ROOM RELIEF. REMOVE RELIEF HEAD ON ROOF, AND REMOVE DUCT AND GRILLE IN SPACE. PATCH CEILING AS REQ'D.
16. (E) GRILLE/DIFFUSER TO BE REMOVED FOR REPLACEMENT.
17. (E) EXHAUST FAN TO BE REMOVED. REMOVE ALL ASSOCIATED DUCTWORK AS SHOWN. REMOVE RA PLENUM ON INLET SIDE BUT (E) RETURN DUCTWORK SERVING UNDERFLOOR CAFETERIA GRILLES TO REMAIN FOR NEW CONNECTION TO NEW RTU UNIT.
18. (E) DISHWASHER EXHAUST TO BE REMOVED. SEE NEW WORK FOR RE-ROUTING IN CONJUNCTION W/ INSTALLATION OF NEW ROOFTOP UNIT.
19. REMOVE (E) DAMPER W/ REMOVAL OF DUCTWORK.
20. REMOVE (E) CAP AT (E) 2" HWS/R BRANCH LINES. SEE NEW WORK FOR NEW CONNECTIONS.
21. (E) CEU-1 TO BE REMOVED. REMOVE ASSOCIATED DUCTWORK, PLENUMS AND DAMPERS AS SHOWN. SEE NEW WORK FOR INSTALLATION OF NEW SYSTEM AND CONNECTIONS.
22. (E) DIFFUSER AND ASSOCIATED FLEX TO BE REMOVED FOR REPLACEMENT.
23. DEMO ALL EXISTING STEAM AND CONDENSATE PIPING AND CONDENSATE PUMP IN THE KITCHEN AREA.

REGISTERED PROFESSIONAL ENGINEER
17884
JULY 25, 1989
SCOTT W. MILLER
EXPIRES: 31DEC20

Date:	10-16-2020 PERMIT SET
Proj No:	10054
Drawn By:	JHB
Chkd By:	SWM
DSGN By:	SWM
Acad Files:	

SUNRISE ELEMENTARY SCHOOL
MECHANICAL EQUIPMENT REPLACEMENT
730 SE 19TH AVE
ALBANY OREGON 97322

MECHANICAL DEMO PLAN

MFIA INC.
Consulting Engineers
2007 S.E. Ash St.
Portland, OR 97214
PHN: (503) 234-0548
FAX: (503) 234-0677
WWW.MFIA-ENG.COM

SHEET
M1.2

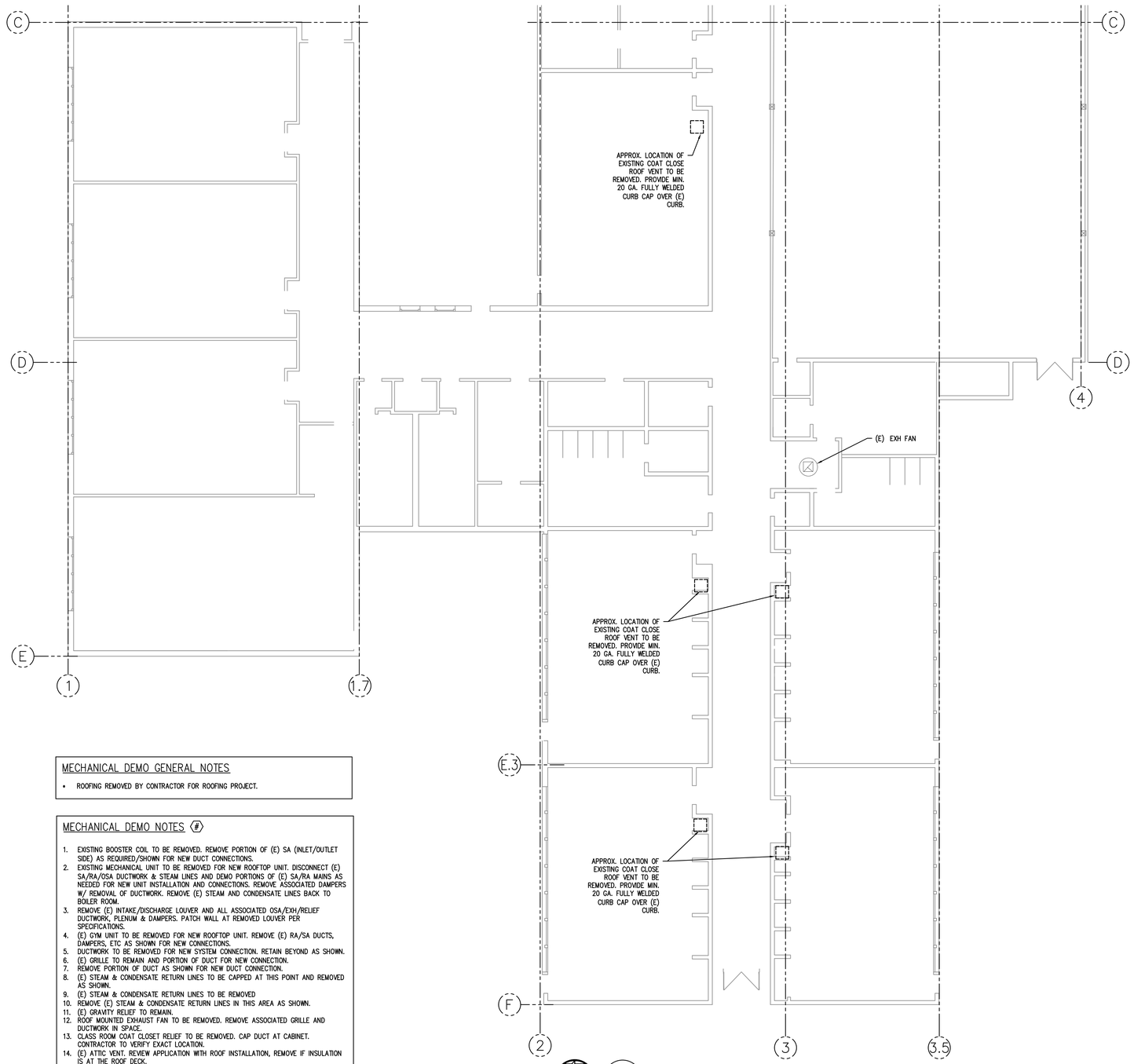

1 / M1.3 MECHANICAL ROOF DEMO PLAN – NW
SCALE: 1/8"=1'-0"

MECHANICAL DEMO GENERAL NOTES

- ROOFING REMOVED BY CONTRACTOR FOR ROOFING PROJECT.

MECHANICAL DEMO NOTES (#)

1. EXISTING BOOSTER COIL TO BE REMOVED. REMOVE PORTION OF (E) SA (INLET/OUTLET SIDE) AS REQUIRED/SHOWN FOR NEW DUCT CONNECTIONS.
2. EXISTING MECHANICAL UNIT TO BE REMOVED FOR NEW ROOFTOP UNIT. DISCONNECT (E) SA/RA/OSA DUCTWORK & STEAM LINES AND DEMO PORTIONS OF (E) SA/RA MAINS AS NEEDED FOR NEW UNIT INSTALLATION AND CONNECTIONS. REMOVE ASSOCIATED DAMPERS W/ REMOVAL OF DUCTWORK. REMOVE (E) STEAM AND CONDENSATE LINES BACK TO BOILER ROOM.
3. REMOVE (E) INTAKE/DISCHARGE LOUVER AND ALL ASSOCIATED OSA/EXH/RELIEF DUCTWORK, PLENUM & DAMPERS. PATCH WALL AT REMOVED LOUVER PER SPECIFICATIONS.
4. (E) GYM UNIT TO BE REMOVED FOR NEW ROOFTOP UNIT. REMOVE (E) RA/SA DUCTS, DAMPERS, ETC AS SHOWN FOR NEW CONNECTIONS.
5. DUCTWORK TO BE REMOVED FOR NEW SYSTEM CONNECTION. RETAIN BEYOND AS SHOWN.
6. (E) GRILLE TO REMAIN AND PORTION OF DUCT FOR NEW CONNECTION.
7. REMOVE PORTION OF DUCT AS SHOWN FOR NEW DUCT CONNECTION.
8. (E) STEAM & CONDENSATE RETURN LINES TO BE CAPPED AT THIS POINT AND REMOVED AS SHOWN.
9. (E) STEAM & CONDENSATE RETURN LINES TO BE REMOVED
10. REMOVE (E) STEAM & CONDENSATE RETURN LINES IN THIS AREA AS SHOWN.
11. (E) GRAVITY RELIEF TO REMAIN.
12. ROOF MOUNTED EXHAUST FAN TO BE REMOVED. REMOVE ASSOCIATED GRILLE AND DUCTWORK IN SPACE.
13. CLASS ROOM COAT CLOSET RELIEF TO BE REMOVED. CAP DUCT AT CABINET. CONTRACTOR TO VERIFY EXACT LOCATION.
14. (E) ATTIC VENT. REVIEW APPLICATION WITH ROOF INSTALLATION, REMOVE IF INSULATION IS AT THE ROOF DECK.
15. (E) CLASS ROOM RELIEF. REMOVE RELIEF HEAD ON ROOF, AND REMOVE DUCT AND GRILLE IN SPACE. PATCH CEILING AS REQ'D.
16. (E) GRILLE/DIFFUSER TO BE REMOVED FOR REPLACEMENT.
17. (E) EXHAUST FAN TO BE REMOVED. REMOVE ALL ASSOCIATED DUCTWORK AS SHOWN. REMOVE RA PLENUM ON INLET SIDE BUT (E) RETURN DUCTWORK SERVING UNDERFLOOR CAFETERIA GRILLES TO REMAIN FOR NEW CONNECTION TO NEW RTU UNIT.
18. (E) DISHWASHER EXHAUST TO BE REMOVED. SEE NEW WORK FOR RE-ROUTING IN CONJUNCTION W/ INSTALLATION OF NEW ROOFTOP UNIT.
19. REMOVE (E) DAMPER W/ REMOVAL OF DUCTWORK.
20. REMOVE (E) CAP AT (E) 2" HWS/R BRANCH LINES. SEE NEW WORK FOR NEW CONNECTIONS.
21. (E) CEU-1 TO BE REMOVED. REMOVE ASSOCIATED DUCTWORK, PLENUMS AND DAMPERS AS SHOWN. SEE NEW WORK FOR INSTALLATION OF NEW SYSTEM AND CONNECTIONS.
22. (E) DIFFUSER AND ASSOCIATED FLEX TO BE REMOVED FOR REPLACEMENT.
23. DEMO ALL EXISTING STEAM AND CONDENSATE PIPING AND CONDENSATE PUMP IN THE KITCHEN AREA.

REGISTERED PROFESSIONAL ENGINEER
17884
JULY 25, 1989
SCOTT W. MILLER
EXPIRES: 31DEC20

Date:	10-16-2020 PERMIT SET
Proj No:	10054
Drawn By:	JHB
Chkd By:	SWM
DSGN By:	SWM
Acad File:	

SUNRISE ELEMENTARY SCHOOL
MECHANICAL EQUIPMENT REPLACEMENT
730 SE 19TH AVE
ALBANY OREGON 97322

MECHANICAL DEMO ROOF PLAN

MFIA INC.
Consulting Engineers
2007 S.E. Ash St.
Portland, OR 97214
PHN: (503) 234-0548
FAX: (503) 234-0677
WWW.MFIA-ENG.COM

SHEET
M1.3

MECHANICAL DEMO GENERAL NOTES

- ROOFING REMOVED BY CONTRACTOR FOR ROOFING PROJECT.

MECHANICAL DEMO NOTES (#)

1. EXISTING BOOSTER COIL TO BE REMOVED. REMOVE PORTION OF (E) SA (INLET/OUTLET SIDE) AS REQUIRED/SHOWN FOR NEW DUCT CONNECTIONS.
2. EXISTING MECHANICAL UNIT TO BE REMOVED FOR NEW ROOFTOP UNIT. DISCONNECT (E) SA/RA/OSA DUCTWORK & STEAM LINES AND DEMO PORTIONS OF (E) SA/RA MAINS AS NEEDED FOR NEW UNIT INSTALLATION AND CONNECTIONS. REMOVE ASSOCIATED DAMPERS W/ REMOVAL OF DUCTWORK. REMOVE (E) STEAM AND CONDENSATE LINES BACK TO BOILER ROOM.
3. REMOVE (E) INTAKE/DISCHARGE LOUVER AND ALL ASSOCIATED OSA/EXH/RELIEF DUCTWORK, PLENUM & DAMPERS. PATCH WALL AT REMOVED LOUVER PER SPECIFICATIONS.
4. (E) GYM UNIT TO BE REMOVED FOR NEW ROOFTOP UNIT. REMOVE (E) RA/SA DUCTS, DAMPERS, ETC AS SHOWN FOR NEW CONNECTIONS.
5. DUCTWORK TO BE REMOVED FOR NEW SYSTEM CONNECTION. RETAIN BEYOND AS SHOWN.
6. (E) GRILLE TO REMAIN AND PORTION OF DUCT FOR NEW CONNECTION.
7. REMOVE PORTION OF DUCT AS SHOWN FOR NEW DUCT CONNECTION.
8. (E) STEAM & CONDENSATE RETURN LINES TO BE CAPPED AT THIS POINT AND REMOVED AS SHOWN.
9. (E) STEAM & CONDENSATE RETURN LINES TO BE REMOVED
10. REMOVE (E) STEAM & CONDENSATE RETURN LINES IN THIS AREA AS SHOWN.
11. (E) GRAVITY RELIEF TO REMAIN.
12. ROOF MOUNTED EXHAUST FAN TO BE REMOVED. REMOVE ASSOCIATED GRILLE AND DUCTWORK IN SPACE.
13. CLASS ROOM COAT CLOSET RELIEF TO BE REMOVED. CAP DUCT AT CABINET. CONTRACTOR TO VERIFY EXACT LOCATION.
14. (E) ATTIC VENT. REVIEW APPLICATION WITH ROOF INSTALLATION, REMOVE IF INSULATION IS AT THE ROOF DECK.
15. (E) CLASS ROOM RELIEF. REMOVE RELIEF HEAD ON ROOF, AND REMOVE DUCT AND GRILLE IN SPACE. PATCH CEILING AS REQ'D.
16. (E) GRILLE/DIFFUSER TO BE REMOVED FOR REPLACEMENT.
17. (E) EXHAUST FAN TO BE REMOVED. REMOVE ALL ASSOCIATED DUCTWORK AS SHOWN. REMOVE RA PLENUM ON INLET SIDE BUT (E) RETURN DUCTWORK SERVING UNDERFLOOR CAFETERIA GRILLES TO REMAIN FOR NEW CONNECTION TO NEW RTU UNIT.
18. (E) DISHWASHER EXHAUST TO BE REMOVED. SEE NEW WORK FOR RE-ROUTING IN CONJUNCTION W/ INSTALLATION OF NEW ROOFTOP UNIT.
19. REMOVE (E) DAMPER W/ REMOVAL OF DUCTWORK.
20. REMOVE (E) CAP AT (E) 2" HWS/R BRANCH LINES. SEE NEW WORK FOR NEW CONNECTIONS.
21. (E) CEU-1 TO BE REMOVED. REMOVE ASSOCIATED DUCTWORK, PLENUMS AND DAMPERS AS SHOWN. SEE NEW WORK FOR INSTALLATION OF NEW SYSTEM AND CONNECTIONS.
22. (E) DIFFUSER AND ASSOCIATED FLEX TO BE REMOVED FOR REPLACEMENT.
23. DEMO ALL EXISTING STEAM AND CONDENSATE PIPING AND CONDENSATE PUMP IN THE KITCHEN AREA.

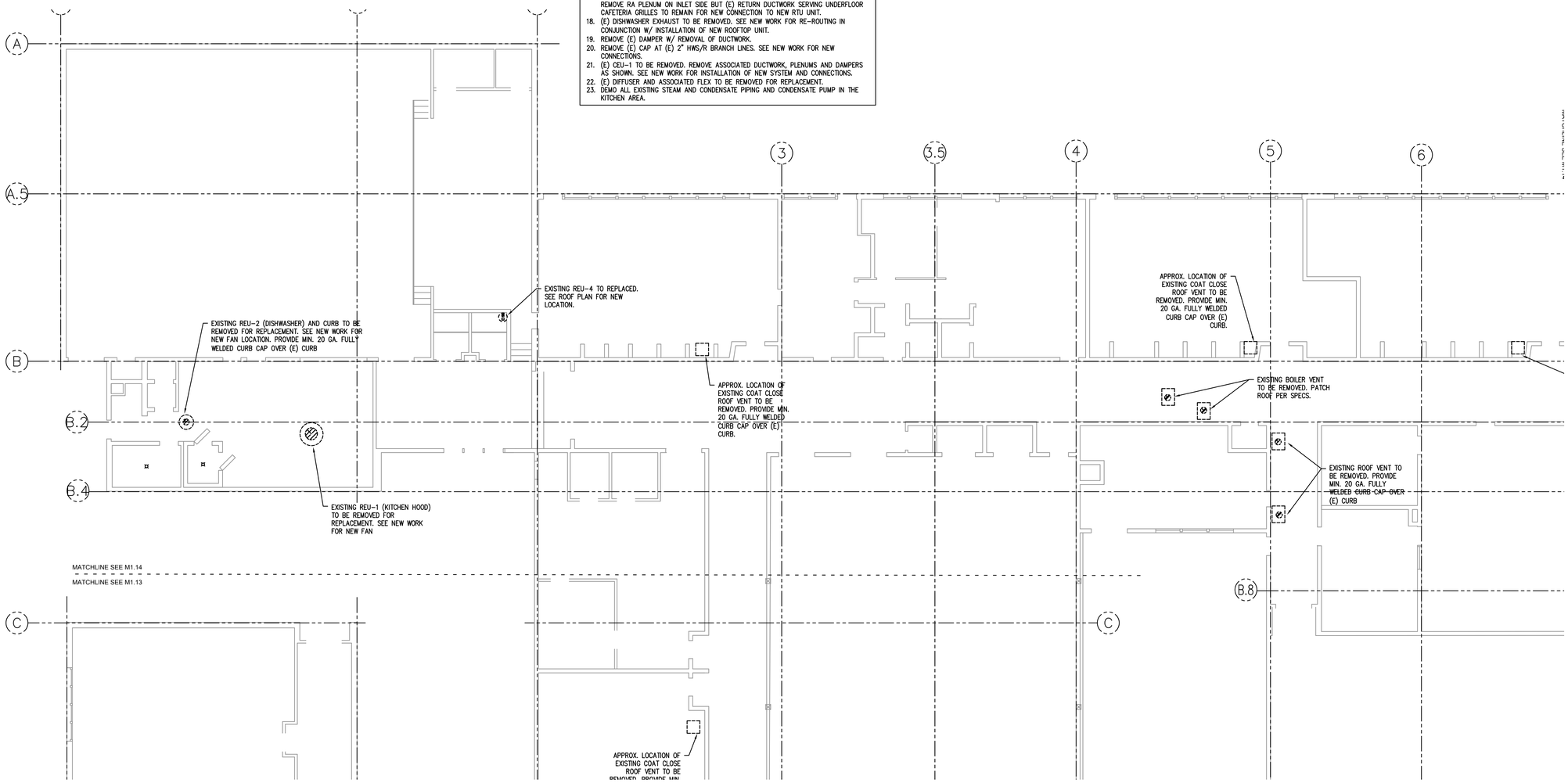

1 / M1.4 MECHANICAL ROOF DEMIO PLAN – NE
SCALE: 1/8"=1'-0"

REGISTERED PROFESSIONAL ENGINEER 17884 JULY 25, 1989 SCOTT W. MILLER
EXPIRES: 31DEC20

Date:	10-16-2020 PERMIT SET
Proj No:	10054
Drawn By:	JHB
Chkd By:	SWM
DSGN By:	SWM
Acad File:	

SUNRISE ELEMENTARY SCHOOL
MECHANICAL EQUIPMENT REPLACEMENT
730 SE 19TH AVE
ALBANY OREGON 97322

MECHANICAL ROOF DEMO PLAN – NE

MFIA INC.
Consulting Engineers
2007 S.E. Ash St.
Portland, OR 97214
PHN: (503) 234-0548
FAX: (503) 234-0677
WWW.MFIA-ENG.COM

SHEET
M1.4

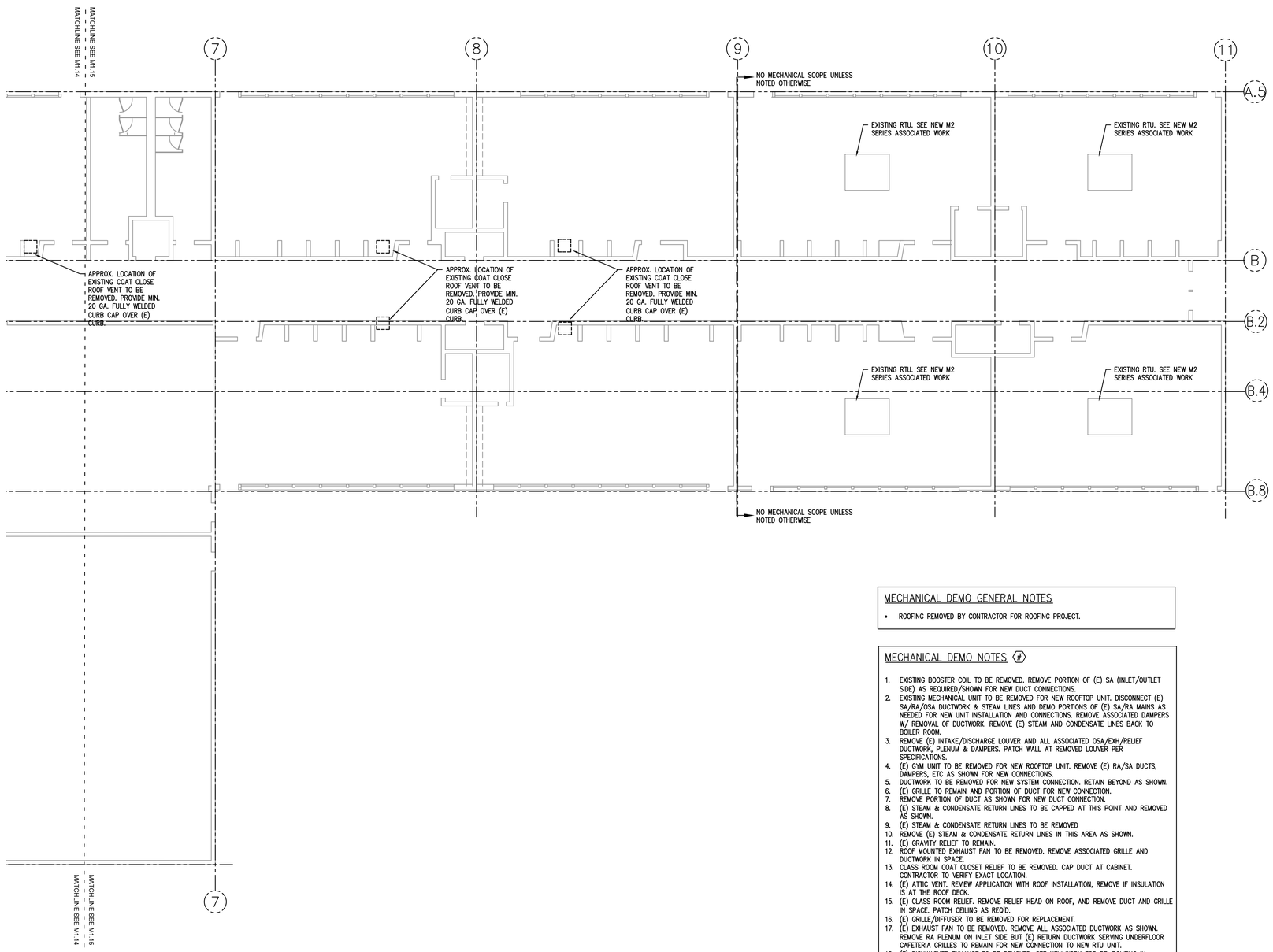

1 / M1.5 MECHANICAL ROOF DEMO PLAN – SOUTH
SCALE: 1/8"=1'-0"

MECHANICAL DEMO GENERAL NOTES

- ROOFING REMOVED BY CONTRACTOR FOR ROOFING PROJECT.

MECHANICAL DEMO NOTES (#)

1. EXISTING BOOSTER COIL TO BE REMOVED. REMOVE PORTION OF (E) SA (INLET/OUTLET SIDE) AS REQUIRED/SHOWN FOR NEW DUCT CONNECTIONS.
2. EXISTING MECHANICAL UNIT TO BE REMOVED FOR NEW ROOFTOP UNIT. DISCONNECT (E) SA/RA/OSA DUCTWORK & STEAM LINES AND DEMO PORTIONS OF (E) SA/RA MAINS AS NEEDED FOR NEW UNIT INSTALLATION AND CONNECTIONS. REMOVE ASSOCIATED DAMPERS W/ REMOVAL OF DUCTWORK. REMOVE (E) STEAM AND CONDENSATE LINES BACK TO BOILER ROOM.
3. REMOVE (E) INTAKE/DISCHARGE LOUVER AND ALL ASSOCIATED OSA/EXH/RELIEF DUCTWORK, PLENUM & DAMPERS. PATCH WALL AT REMOVED LOUVER PER SPECIFICATIONS.
4. (E) GYM UNIT TO BE REMOVED FOR NEW ROOFTOP UNIT. REMOVE (E) RA/SA DUCTS, DAMPERS, ETC AS SHOWN FOR NEW CONNECTIONS.
5. DUCTWORK TO BE REMOVED FOR NEW SYSTEM CONNECTION. RETAIN BEYOND AS SHOWN.
6. (E) GRILLE TO REMAIN AND PORTION OF DUCT FOR NEW CONNECTION.
7. REMOVE PORTION OF DUCT AS SHOWN FOR NEW DUCT CONNECTION.
8. (E) STEAM & CONDENSATE RETURN LINES TO BE CAPPED AT THIS POINT AND REMOVED AS SHOWN.
9. (E) STEAM & CONDENSATE RETURN LINES TO BE REMOVED
10. REMOVE (E) STEAM & CONDENSATE RETURN LINES IN THIS AREA AS SHOWN.
11. (E) GRAVITY RELIEF TO REMAIN.
12. ROOF MOUNTED EXHAUST FAN TO BE REMOVED. REMOVE ASSOCIATED GRILLE AND DUCTWORK IN SPACE.
13. CLASS ROOM COAT CLOSET RELIEF TO BE REMOVED. CAP DUCT AT CABINET. CONTRACTOR TO VERIFY EXACT LOCATION.
14. (E) ATTIC VENT. REVIEW APPLICATION WITH ROOF INSTALLATION, REMOVE IF INSULATION IS AT THE ROOF DECK.
15. (E) CLASS ROOM RELIEF. REMOVE RELIEF HEAD ON ROOF, AND REMOVE DUCT AND GRILLE IN SPACE. PATCH CEILING AS REQ'D.
16. (E) GRILLE/DIFFUSER TO BE REMOVED FOR REPLACEMENT.
17. (E) EXHAUST FAN TO BE REMOVED. REMOVE ALL ASSOCIATED DUCTWORK AS SHOWN. REMOVE RA PLENUM ON INLET SIDE BUT (E) RETURN DUCTWORK SERVING UNDERFLOOR CAFETERIA GRILLES TO REMAIN FOR NEW CONNECTION TO NEW RTU UNIT.
18. (E) DISHWASHER EXHAUST TO BE REMOVED. SEE NEW WORK FOR RE-ROUTING IN CONJUNCTION W/ INSTALLATION OF NEW ROOFTOP UNIT.
19. REMOVE (E) DAMPER W/ REMOVAL OF DUCTWORK.
20. REMOVE (E) CAP AT (E) 2" HWS/R BRANCH LINES. SEE NEW WORK FOR NEW CONNECTIONS.
21. (E) CEU-1 TO BE REMOVED. REMOVE ASSOCIATED DUCTWORK, PLENUMS AND DAMPERS AS SHOWN. SEE NEW WORK FOR INSTALLATION OF NEW SYSTEM AND CONNECTIONS.
22. (E) DIFFUSER AND ASSOCIATED FLEX TO BE REMOVED FOR REPLACEMENT.
23. DEMO ALL EXISTING STEAM AND CONDENSATE PIPING AND CONDENSATE PUMP IN THE KITCHEN AREA.

REGISTERED PROFESSIONAL ENGINEER
17884
JULY 25, 1989
SCOTT W. MILLER
EXPIRES: 31DEC20

Date:	10-16-2020 PERMIT SET
Proj No:	10064
Drawn By:	JHB
Chkd By:	SWM
DSGN By:	SWM
Acad File:	

SUNRISE ELEMENTARY SCHOOL
MECHANICAL EQUIPMENT REPLACEMENT
730 SE 19TH AVE
ALBANY OREGON 97322

MECHANICAL ROOF DEMO PLAN – SOUTH

MFIA INC.
Consulting Engineers
2007 S.E. Ash St.
Portland, OR 97214
PHN: (503) 234-0548
FAX: (503) 234-0677
WWW.MFIA-ENG.COM

SHEET
M1.5

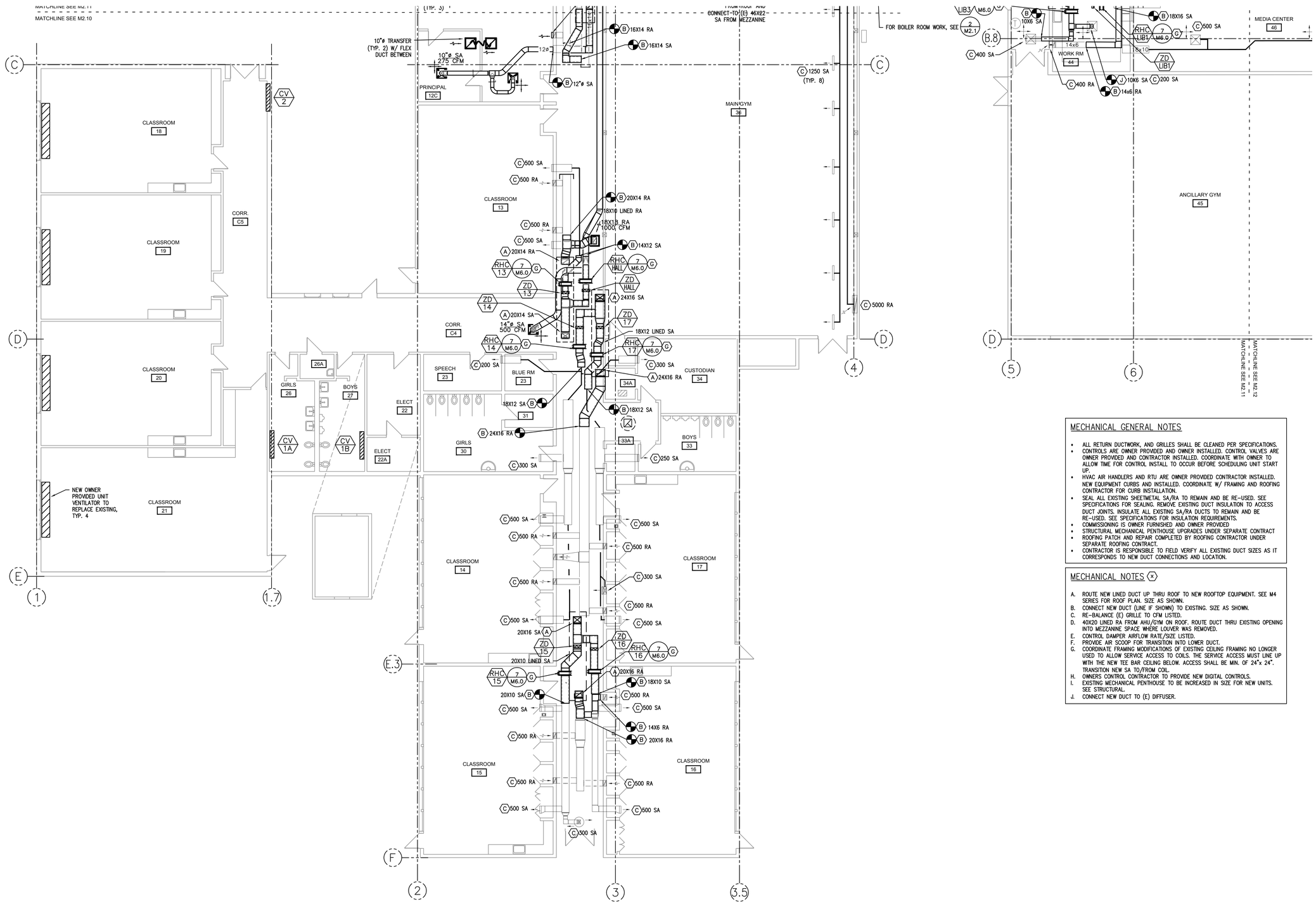

MECHANICAL GENERAL NOTES

- ALL RETURN DUCTWORK, AND GRILLES SHALL BE CLEANED PER SPECIFICATIONS.
- CONTROLS ARE OWNER PROVIDED AND OWNER INSTALLED. CONTROL VALVES ARE OWNER PROVIDED AND CONTRACTOR INSTALLED. COORDINATE WITH OWNER TO ALLOW TIME FOR CONTROL INSTALL TO OCCUR BEFORE SCHEDULING UNIT START UP.
- HVAC AIR HANDLERS AND RTU ARE OWNER PROVIDED CONTRACTOR INSTALLED. NEW EQUIPMENT CURBS AND INSTALLED. COORDINATE W/ FRAMING AND ROOFING CONTRACTOR FOR CURB INSTALLATION.
- SEAL ALL EXISTING SHEETMETAL SA/RA TO REMAIN AND BE RE-USED. SEE SPECIFICATIONS FOR SEALING. REMOVE EXISTING DUCT INSULATION TO ACCESS DUCT JOINTS. INSULATE ALL EXISTING SA/RA DUCTS TO REMAIN AND BE RE-USED. SEE SPECIFICATIONS FOR INSULATION REQUIREMENTS.
- COMMISSIONING IS OWNER FURNISHED AND OWNER PROVIDED
- STRUCTURAL MECHANICAL PENTHOUSE UPGRADES UNDER SEPARATE CONTRACT
- ROOFING PATCH AND REPAIR COMPLETED BY ROOFING CONTRACTOR UNDER SEPARATE ROOFING CONTRACT.
- CONTRACTOR IS RESPONSIBLE TO FIELD VERIFY ALL EXISTING DUCT SIZES AS IT CORRESPONDS TO NEW DUCT CONNECTIONS AND LOCATION.

MECHANICAL NOTES (x)

A. ROUTE NEW LINED DUCT UP THRU ROOF TO NEW ROOFTOP EQUIPMENT. SEE M4 SERIES FOR ROOF PLAN. SIZE AS SHOWN.
B. CONNECT NEW DUCT (LINE IF SHOWN) TO EXISTING. SIZE AS SHOWN.
C. RE-BALANCE (E) GRILLE TO CFM LISTED.
D. 40X20 LINED RA FROM AHU/GYM ON ROOF. ROUTE DUCT THRU EXISTING OPENING INTO MEZZANINE SPACE WHERE LOUVER WAS REMOVED.
E. CONTROL DAMPER AIRFLOW RATE/SIZE LISTED.
F. PROVIDE AIR SCOOP FOR TRANSITION INTO LOWER DUCT.
G. COORDINATE FRAMING MODIFICATIONS OF EXISTING CEILING FRAMING NO LONGER USED TO ALLOW SERVICE ACCESS TO COILS. THE SERVICE ACCESS MUST LINE UP WITH THE NEW TEE BAR CEILING BELOW. ACCESS SHALL BE MIN. OF 24"x 24". TRANSITION NEW SA TO/FROM COIL.
H. OWNERS CONTROL CONTRACTOR TO PROVIDE NEW DIGITAL CONTROLS.
I. EXISTING MECHANICAL PENTHOUSE TO BE INCREASED IN SIZE FOR NEW UNITS. SEE STRUCTURAL.
J. CONNECT NEW DUCT TO (E) DIFFUSER.

1 M2.0 MECHANICAL PLAN – WEST
SCALE: 1/8"=1'-0"

REGISTERED PROFESSIONAL ENGINEER 17884 JULY 25, 1989 SCOTT W. MILLER
EXPIRES: 31DEC20

Date:	10-16-2020 PERMIT SET
Proj No:	10054
Drawn By:	JHB
Chkd By:	SWM
DSGN By:	SWM
Acad File:	

SUNRISE ELEMENTARY SCHOOL
MECHANICAL EQUIPMENT REPLACEMENT
730 SE 19TH AVE
ALBANY OREGON 97322

MECHANICAL PLAN

MFIA INC.
Consulting Engineers
2007 S.E. Ash St.
Portland, OR 97214
PHN: (503) 234-0548
FAX: (503) 234-0677
WWW.MFIA-ENG.COM

SHEET
M2.0

MECHANICAL GENERAL NOTES

- ALL RETURN DUCTWORK, AND GRILLES SHALL BE CLEANED PER SPECIFICATIONS.
- CONTROLS ARE OWNER PROVIDED AND OWNER INSTALLED. CONTROL VALVES ARE OWNER PROVIDED AND CONTRACTOR INSTALLED. COORDINATE WITH OWNER TO ALLOW TIME FOR CONTROL INSTALL TO OCCUR BEFORE SCHEDULING UNIT START UP.
- HVAC AIR HANDLERS AND RTU ARE OWNER PROVIDED CONTRACTOR INSTALLED. NEW EQUIPMENT CURBS AND INSTALLED. COORDINATE W/ FRAMING AND ROOFING CONTRACTOR FOR CURB INSTALLATION.
- SEAL ALL EXISTING SHEETMETAL SA/RA TO REMAIN AND BE RE-USED. SEE SPECIFICATIONS FOR SEALING. REMOVE EXISTING DUCT INSULATION TO ACCESS DUCT JOINTS. INSULATE ALL EXISTING SA/RA DUCTS TO REMAIN AND BE RE-USED. SEE SPECIFICATIONS FOR INSULATION REQUIREMENTS.
- COMMISSIONING IS OWNER FURNISHED AND OWNER PROVIDED
- STRUCTURAL MECHANICAL PENTHOUSE UPGRADES UNDER SEPARATE CONTRACT
- ROOFING PATCH AND REPAIR COMPLETED BY ROOFING CONTRACTOR UNDER SEPARATE ROOFING CONTRACT.
- CONTRACTOR IS RESPONSIBLE TO FIELD VERIFY ALL EXISTING DUCT SIZES AS IT CORRESPONDS TO NEW DUCT CONNECTIONS AND LOCATION.

MECHANICAL NOTES (x)

A. ROUTE NEW LINED DUCT UP THRU ROOF TO NEW ROOFTOP EQUIPMENT. SEE M4 SERIES FOR ROOF PLAN. SIZE AS SHOWN.
B. CONNECT NEW DUCT (LINE IF SHOWN) TO EXISTING. SIZE AS SHOWN.
C. RE-BALANCE (E) GRILLE TO CFM LISTED.
D. 40X20 LINED RA FROM AHU/GYM ON ROOF. ROUTE DUCT THRU EXISTING OPENING INTO MEZZANINE SPACE WHERE LOUVER WAS REMOVED.
E. CONTROL DAMPER AIRFLOW RATE/SIZE LISTED.
F. PROVIDE AIR SCOOP FOR TRANSITION INTO LOWER DUCT.
G. COORDINATE FRAMING MODIFICATIONS OF EXISTING CEILING FRAMING NO LONGER USED TO ALLOW SERVICE ACCESS TO COILS. THE SERVICE ACCESS MUST LINE UP WITH THE NEW TEE BAR CEILING BELOW. ACCESS SHALL BE MIN. OF 24"x 24". TRANSITION NEW SA TO/FROM COIL.
H. OWNERS CONTROL CONTRACTOR TO PROVIDE NEW DIGITAL CONTROLS.
I. EXISTING MECHANICAL PENTHOUSE TO BE INCREASED IN SIZE FOR NEW UNITS. SEE STRUCTURAL.
J. CONNECT NEW DUCT TO (E) DIFFUSER.

BOILER ROOM GENERAL NOTE

- COORD. W/ SHEETROCK CONTRACTOR TO PATCH BOILER ROOM CEILING TO MATCH ADJACENT SURFACES

BOILER ROOM NOTES: (#)

(1. ENCAPSULATE (E) BOILER HOUSEKEEPING PADS W/ IN NEW PAD. PAD TO BE 5-1/2" DEEP (MIN.).
(2. 3"ø VENT & COMBUSTION AIR UP TO CONCENTRIC VENT THRU ROOF.
(3. NOT USED.
(4. ROUTE 4"ø SCHEDULE 80 PVC BOILER FLUE FROM BOILER (TYP. 3), UP THRU ROOF. COORD. ROUTING W/ EXISTING AND NEW DUCTS IN MECHANICAL ROOM ABOVE.
(5. ROUTE 4"ø SCHEDULE 80 PVC BOILER COMBUSTION AIR DUCT FROM BOILER (TYP. 3) UP THRU ROOF. COORD. ROUTING W/ EXISTING AND NEW DUCTS IN MECHANICAL ROOM ABOVE.

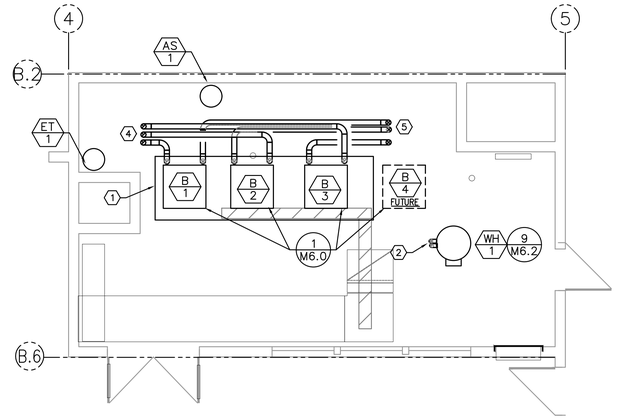

NOTE: BOILER ROOM WORK SHALL BE UNDER ALTERNATE #1

2 / M2.1 BOILER RM 39 MECH. PLAN
SCALE: 1/4"=1'-0"

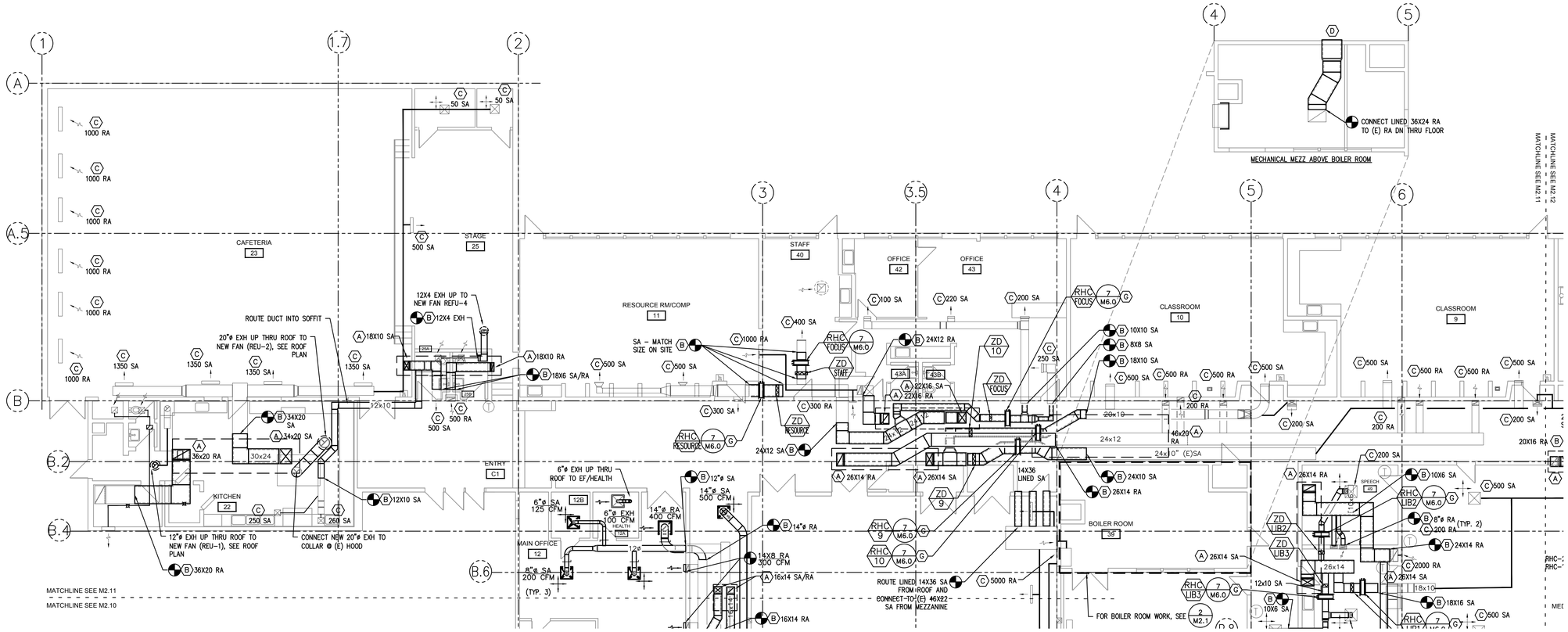

1 / M2.1 MECHANICAL PLAN – NW
SCALE: 1/8"=1'-0"

REGISTERED PROFESSIONAL ENGINEER 17884 JULY 25, 1989 SCOTT W. MILLER
EXPIRES: 31DEC20

Date:	10-16-2020 PERMIT SET
Proj No:	10064
Drawn By:	JHB
Chkd By:	SWM
DSGN By:	SWM
Acad File:	

SUNRISE ELEMENTARY SCHOOL
MECHANICAL EQUIPMENT REPLACEMENT
730 SE 19TH AVE
ALBANY OREGON 97322

MECHANICAL PLAN

MFIA INC.
Consulting Engineers
2007 S.E. Ash St.
Portland, OR 97214
PHN: (503) 234-0548
FAX: (503) 234-0677
WWW.MFIA-ENG.COM

SHEET
M2.1

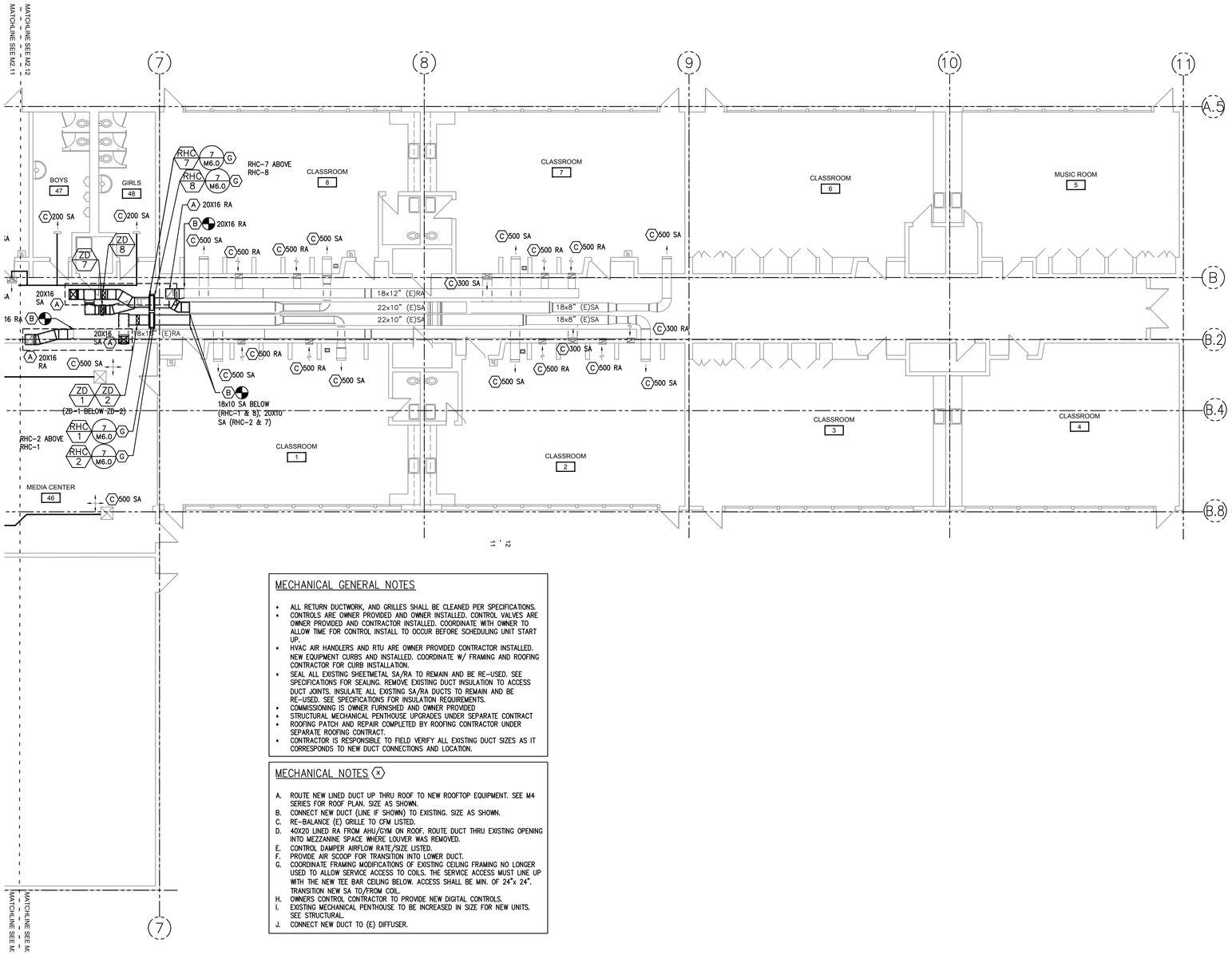

MECHANICAL GENERAL NOTES

- ALL RETURN DUCTWORK, AND GRILLES SHALL BE CLEANED PER SPECIFICATIONS.
- CONTROLS ARE OWNER PROVIDED AND OWNER INSTALLED. CONTROL VALVES ARE OWNER PROVIDED AND CONTRACTOR INSTALLED. COORDINATE WITH OWNER TO ALLOW TIME FOR CONTROL INSTALL TO OCCUR BEFORE SCHEDULING UNIT START UP.
- HVAC AIR HANDLERS AND RTU ARE OWNER PROVIDED CONTRACTOR INSTALLED. NEW EQUIPMENT CURBS AND INSTALLED. COORDINATE W/ FRAMING AND ROOFING CONTRACTOR FOR CURB INSTALLATION.
- SEAL ALL EXISTING SHEETMETAL SA/RA TO REMAIN AND BE RE-USED. SEE SPECIFICATIONS FOR SEALING. REMOVE EXISTING DUCT INSULATION TO ACCESS DUCT JOINTS. INSULATE ALL EXISTING SA/RA DUCTS TO REMAIN AND BE RE-USED. SEE SPECIFICATIONS FOR INSULATION REQUIREMENTS.
- COMMISSIONING IS OWNER FURNISHED AND OWNER PROVIDED
- STRUCTURAL MECHANICAL PENTHOUSE UPGRADES UNDER SEPARATE CONTRACT
- ROOFING PATCH AND REPAIR COMPLETED BY ROOFING CONTRACTOR UNDER SEPARATE ROOFING CONTRACT.
- CONTRACTOR IS RESPONSIBLE TO FIELD VERIFY ALL EXISTING DUCT SIZES AS IT CORRESPONDS TO NEW DUCT CONNECTIONS AND LOCATION.

MECHANICAL NOTES (X)

A. ROUTE NEW LINED DUCT UP THRU ROOF TO NEW ROOFTOP EQUIPMENT. SEE M4 SERIES FOR ROOF PLAN. SIZE AS SHOWN.
B. CONNECT NEW DUCT (LINE IF SHOWN) TO EXISTING. SIZE AS SHOWN.
C. RE-BALANCE (E) GRILLE TO CFM LISTED.
D. 40X20 LINED RA FROM AHU/GYM ON ROOF. ROUTE DUCT THRU EXISTING OPENING INTO MEZZANINE SPACE WHERE LOUVER WAS REMOVED.
E. CONTROL DAMPER AIRFLOW RATE/SIZE LISTED.
F. PROVIDE AIR SCOOP FOR TRANSITION INTO LOWER DUCT.
G. COORDINATE FRAMING MODIFICATIONS OF EXISTING CEILING FRAMING NO LONGER USED TO ALLOW SERVICE ACCESS TO COILS. THE SERVICE ACCESS MUST LINE UP WITH THE NEW TEE BAR CEILING BELOW. ACCESS SHALL BE MIN. OF 24"x 24". TRANSITION NEW SA TO/FROM COIL.
H. OWNERS CONTROL CONTRACTOR TO PROVIDE NEW DIGITAL CONTROLS.
I. EXISTING MECHANICAL PENTHOUSE TO BE INCREASED IN SIZE FOR NEW UNITS. SEE STRUCTURAL.
J. CONNECT NEW DUCT TO (E) DIFFUSER.

1 / M2.2 MECHANICAL PLAN – SOUTH
SCALE: 1/8"=1'-0"

REGISTERED PROFESSIONAL ENGINEER
17884
JULY 25, 1989
SCOTT W. MILLER
EXPIRES: 31DEC20

Date:	10-16-2020 PERMIT SET
Proj No:	10054
Drawn By:	JHB
Chkd By:	SWM
DSGN By:	SWM
Acad File:	

SUNRISE ELEMENTARY SCHOOL
MECHANICAL EQUIPMENT REPLACEMENT
730 SE 19TH AVE
ALBANY OREGON 97322

MECHANICAL PLAN

MFIA INC.

Consulting Engineers
2007 S.E. Ash St.
Portland, OR 97214
PHN: (503) 234-0548
FAX: (503) 234-0577
WWW.MFIA-ENG.COM

SHEET
M22

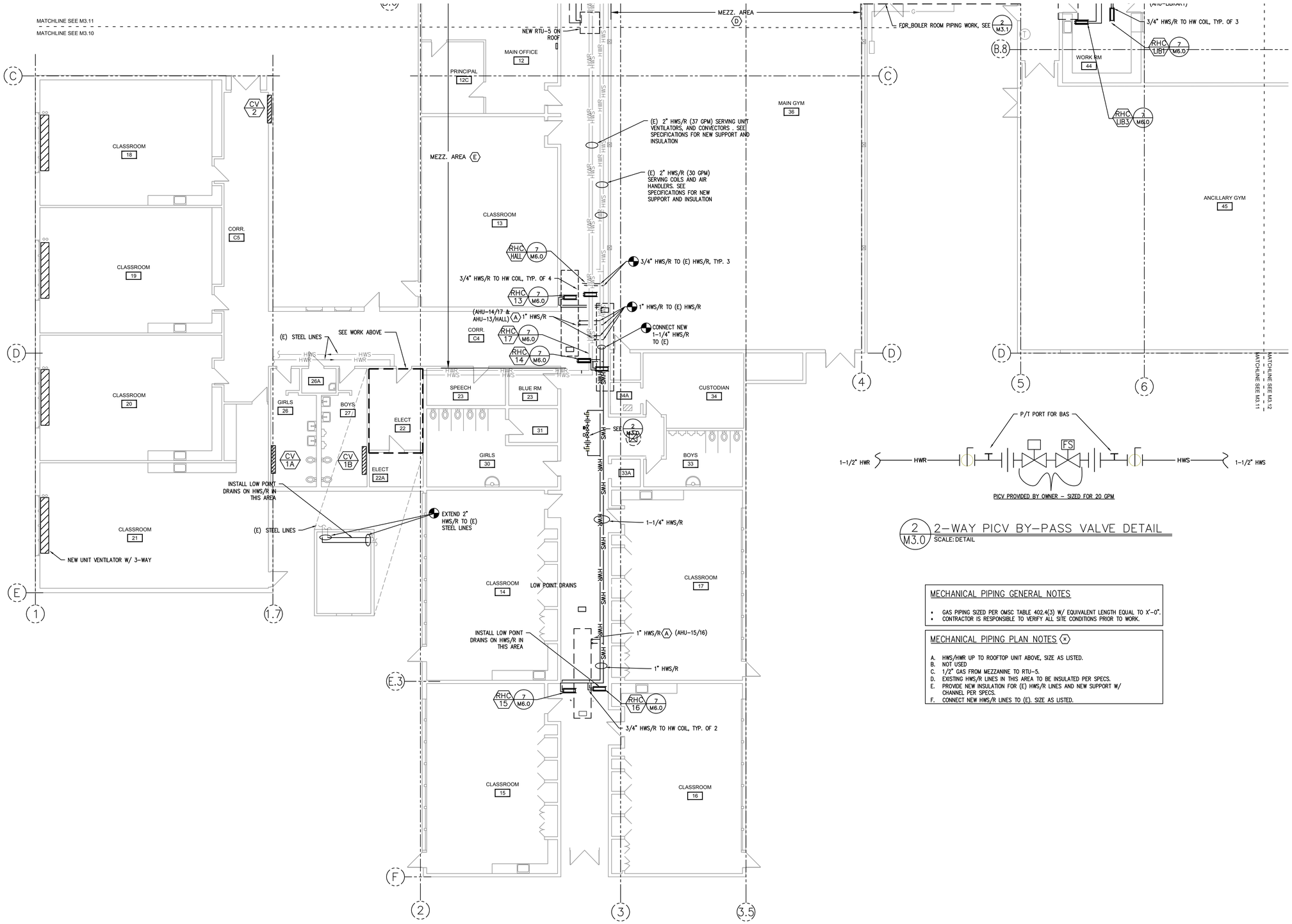

1 M3.0 MECHANICAL PIPING PLAN – WEST
SCALE: 1/8"=1'-0"

2 M3.0 2-WAY PICV BY-PASS VALVE DETAIL
SCALE: DETAIL

MECHANICAL PIPING GENERAL NOTES

- GAS PIPING SIZED PER OMSC TABLE 402.4(3) W/ EQUIVALENT LENGTH EQUAL TO X'-0".
- CONTRACTOR IS RESPONSIBLE TO VERIFY ALL SITE CONDITIONS PRIOR TO WORK.

MECHANICAL PIPING PLAN NOTES (X)

A. HWS/HWR UP TO ROOFTOP UNIT ABOVE, SIZE AS LISTED.
B. NOT USED
C. 1/2" GAS FROM MEZZANINE TO RTU-5.
D. EXISTING HWS/R LINES IN THIS AREA TO BE INSULATED PER SPECS.
E. PROVIDE NEW INSULATION FOR (E) HWS/R LINES AND NEW SUPPORT W/ CHANNEL PER SPECS.
F. CONNECT NEW HWS/R LINES TO (E). SIZE AS LISTED.

REGISTERED PROFESSIONAL ENGINEER
17884
JULY 25, 1989
SCOTT W. MILLER
EXPIRES: 31DEC20

Date:	10-16-2020 PERMIT SET
Proj No:	10054
Drawn By:	JHB
Chkd By:	SWM
DSGN By:	SWM
Acad File:	

SUNRISE ELEMENTARY SCHOOL
MECHANICAL EQUIPMENT REPLACEMENT
730 SE 19TH AVE
ALBANY OREGON 97322

MECHANICAL PIPING PLAN

MFIA INC.

Consulting Engineers
2007 S.E. Ash St.
Portland, OR 97214
PHN: (503) 234-0548
FAX: (503) 234-0677
WWW.MFIA-ENG.COM

SHEET
M3.0

MECHANICAL PIPING GENERAL NOTES

- GAS PIPING SIZED PER OMSC TABLE 402.4(3) W/ EQUIVALENT LENGTH EQUAL TO X'-0".
- CONTRACTOR IS RESPONSIBLE TO VERIFY ALL SITE CONDITIONS PRIOR TO WORK.

MECHANICAL PIPING PLAN NOTES (x)

A. HWS/HWR UP TO ROOFTOP UNIT ABOVE, SIZE AS LISTED.
B. NOT USED
C. 1/2" GAS FROM MEZZANINE TO RTU-5.
D. EXISTING HWS/R LINES IN THIS AREA TO BE INSULATED PER SPECS.
E. PROVIDE NEW INSULATION FOR (E) HWS/R LINES AND NEW SUPPORT W/ CHANNEL PER SPECS.
F. CONNECT NEW HWS/R LINES TO (E). SIZE AS LISTED.

BOILER ROOM GENERAL NOTE

- COORD. W/ SHEETROCK CONTRACTOR TO PATCH BOILER ROOM CEILING TO MATCH ADJACENT SURFACES

BOILER ROOM NOTES: (#)

(1. CONNECT NEW 3" HWS/R TO EXISTING.
(2. CONNECT NEW 2" GAS TP (E) 2". ROUTE TO NEW BOILERS (QTY 4 @ 1-1/4"ea), WATER HEATER (QTY 1 @ 1/2"), AND RTU-5 (QTY 1 @ 1/2"). GAS LINE SIZED FOR 400'-0" EQUIVALENT LINE LENGTH AT 2 PSI SERVICE.
(3. CAP 4" HWS/R FOR FUTURE.
(4. 1-1/4" GAS TO BOILER, TYP. 4. SEE 3/M6.0 FOR REG INFORMATION. FOR FUTURE BOILER B-4, CAP LINE AT HEADER FOR FUTURE CONNECTION.
(5. 1/2" GAS TO WATER HEATER. SEE 3/M6.0 FOR REG INFORMATION.

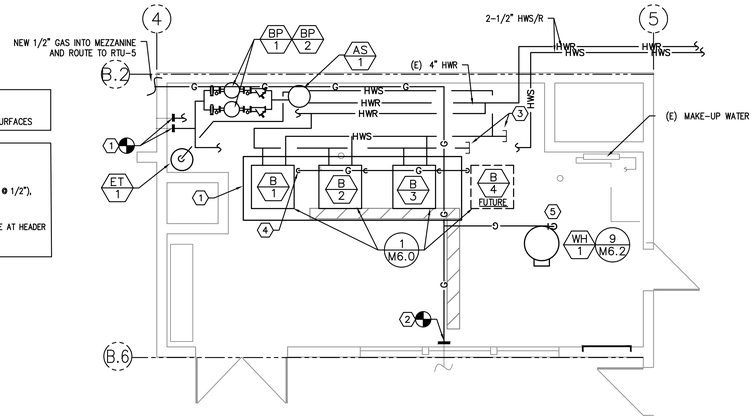

NOTE: BOILER ROOM WORK SHALL BE UNDER ALTERNATE #1

2 / M2.1 BOILER RM 39 MECH. PLAN
SCALE: 1/4"=1'-0"

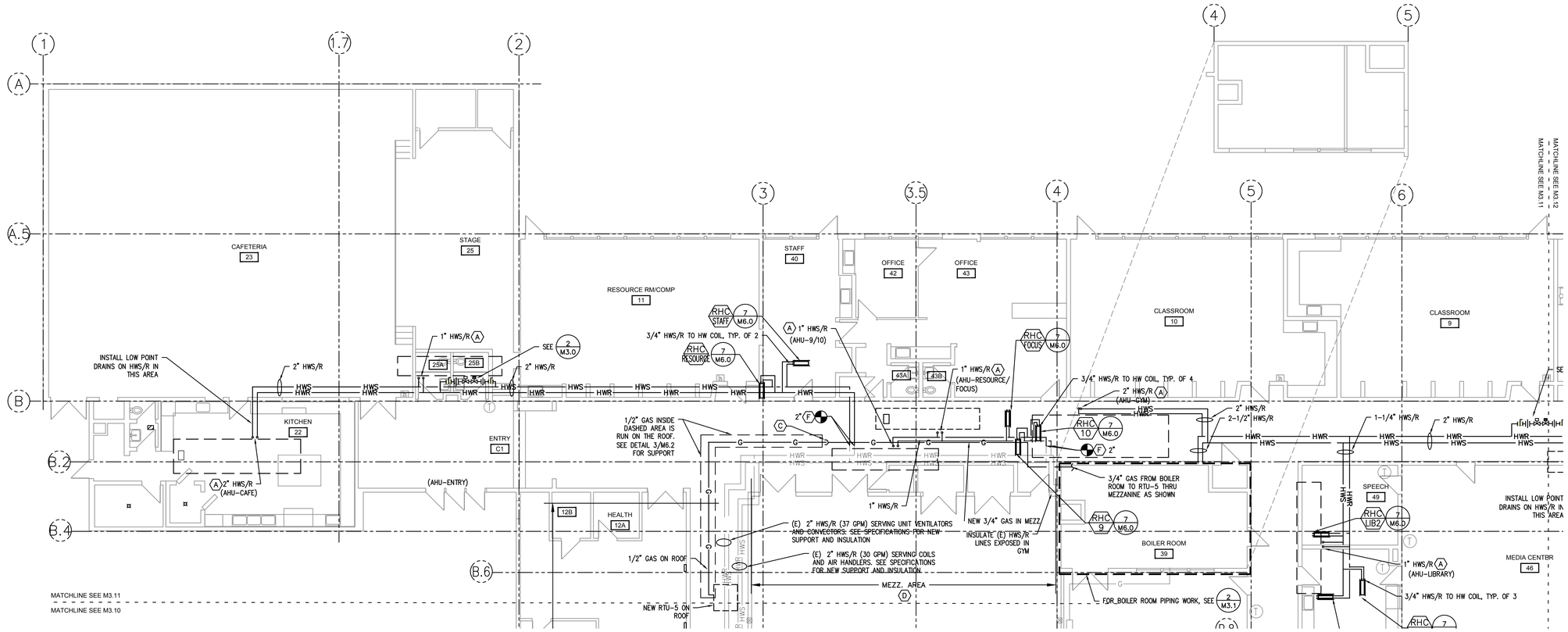

1 / M3.1 MECHANICAL PIPING PLAN – NW
SCALE: 1/8"=1'-0"

REGISTERED PROFESSIONAL ENGINEER 17884 SCOTT W. MILLER JULY 25, 1989
EXPIRES: 31DEC20

Date:	10-16-2020 PERMIT SET
Proj No:	10064
Drawn By:	JHB
Chkd By:	SWM
DSGN By:	SWM
Acad File:	

SUNRISE ELEMENTARY SCHOOL
MECHANICAL EQUIPMENT REPLACEMENT
730 SE 19TH AVE
ALBANY OREGON 97322

MECHANICAL PIPING PLAN

MFIA INC.
Consulting Engineers
2007 S.E. Ash St.
Portland, OR 97214
PHN: (503) 234-0548
FAX: (503) 234-0677
WWW.MFIA-ENG.COM

SHEET
M3.1

MECHANICAL PIPING GENERAL NOTES

- GAS PIPING SIZED PER OMSC TABLE 402.4(3) W/ EQUIVALENT LENGTH EQUAL TO X'-0".
- CONTRACTOR IS RESPONSIBLE TO VERIFY ALL SITE CONDITIONS PRIOR TO WORK.

MECHANICAL PIPING PLAN NOTES (X)

A. HWS/HWR UP TO ROOFTOP UNIT ABOVE, SIZE AS LISTED.
B. NOT USED
C. 1/2" GAS FROM MEZZANINE TO RTU-5.
D. EXISTING HWS/R LINES IN THIS AREA TO BE INSULATED PER SPECS.
E. PROVIDE NEW INSULATION FOR (E) HWS/R LINES AND NEW SUPPORT W/ CHANNEL PER SPECS.
F. CONNECT NEW HWS/R LINES TO (E). SIZE AS LISTED.

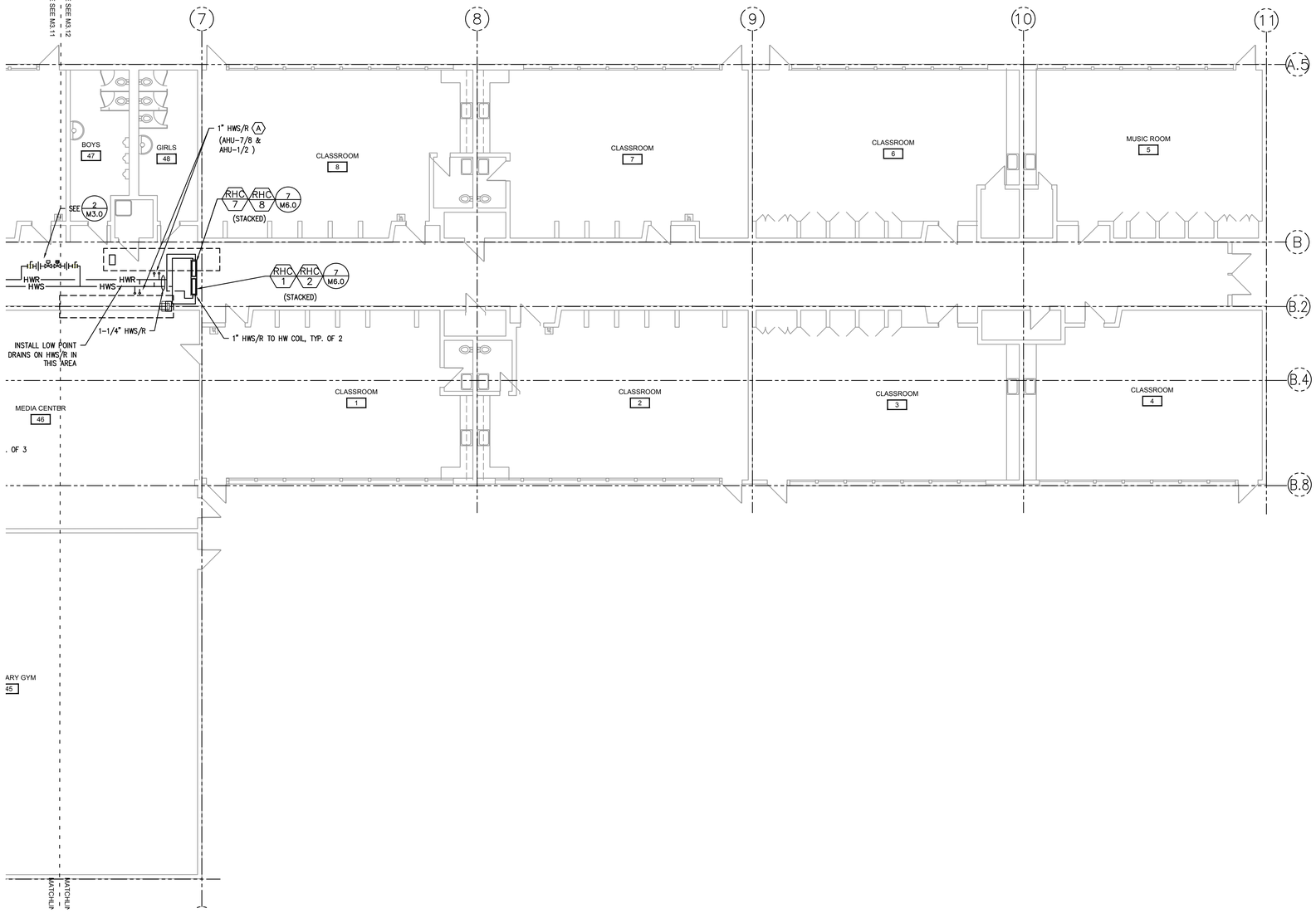

1 / M3.2 MECHANICAL PIPING PLAN – SOUTH
SCALE: 1/8"=1'-0"

REGISTERED PROFESSIONAL ENGINEER
17884
JULY 25, 1989
SCOTT W. MILLER
EXPIRES: 31DEC20

Date:	10-16-2020 PERMIT SET
Proj No:	10064
Drawn By:	JHB
Chkd By:	SWM
DSGN By:	SWM
Acad File:	

SUNRISE ELEMENTARY SCHOOL
MECHANICAL EQUIPMENT REPLACEMENT
730 SE 19TH AVE
ALBANY OREGON 97322

MECHANICAL PIPING PLAN

MFIA INC.

Consulting Engineers
2007 S.E. Ash St.
Portland, OR 97214
PHN: (503) 234-0548
FAX: (503) 234-0677
WWW.MFIA-ENG.COM

SHEET
M3.2

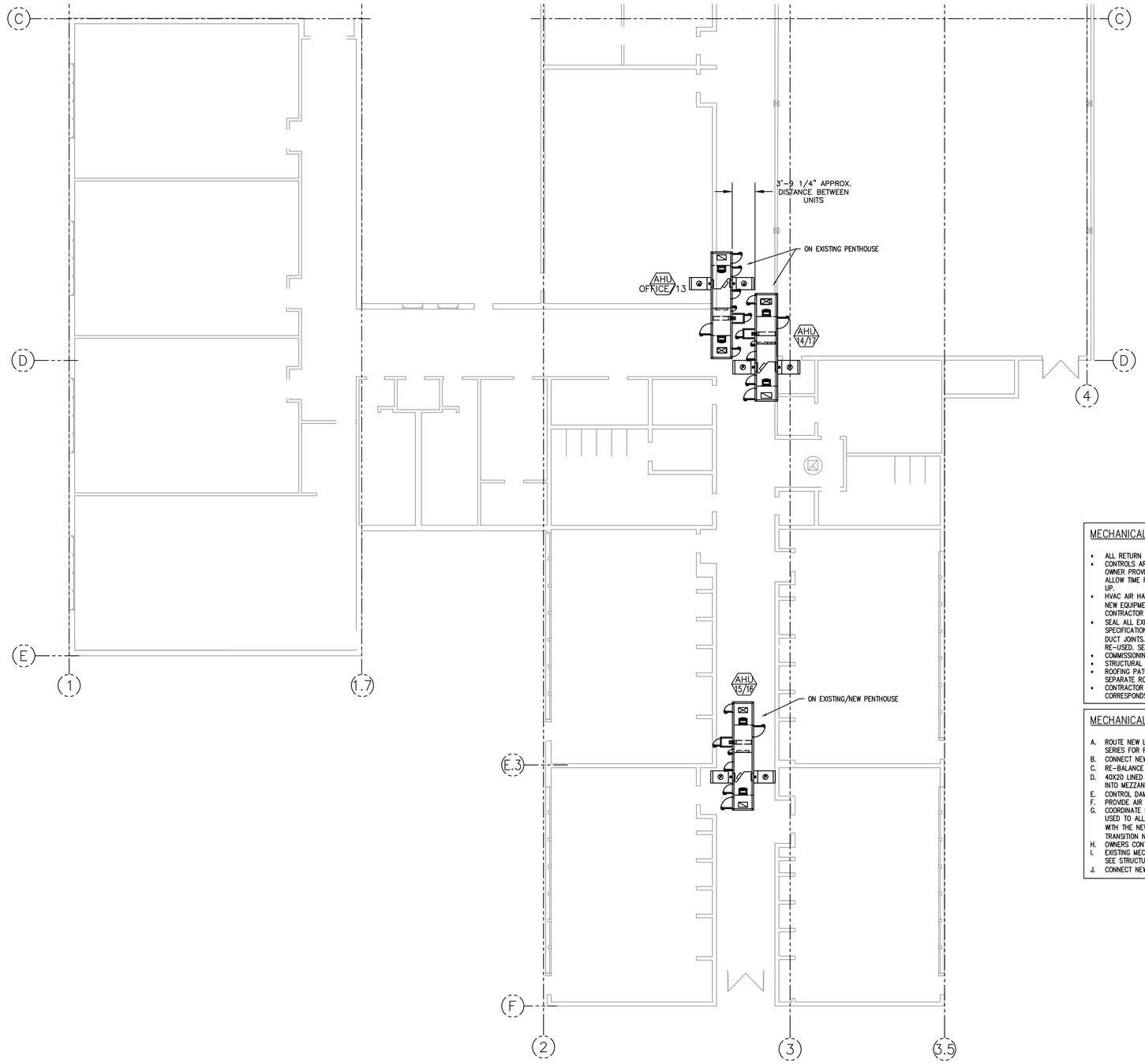

1 M4.0 MECHANICAL ROOF PLAN – NW
SCALE: 1/8"=1'-0"

MECHANICAL GENERAL NOTES

- ALL RETURN DUCTWORK, AND GRILLES SHALL BE CLEANED PER SPECIFICATIONS.
- CONTROLS ARE OWNER PROVIDED AND OWNER INSTALLED. CONTROL VALVES ARE OWNER PROVIDED AND CONTRACTOR INSTALLED. COORDINATE WITH OWNER TO ALLOW TIME FOR CONTROL INSTALL TO OCCUR BEFORE SCHEDULING UNIT START UP.
- HVAC AIR HANDLERS AND RTU ARE OWNER PROVIDED CONTRACTOR INSTALLED. NEW EQUIPMENT CURBS AND INSTALLED. COORDINATE W/ FRAMING AND ROOFING CONTRACTOR FOR CURB INSTALLATION.
- SEAL ALL EXISTING SHEETMETAL SA/RA TO REMAIN AND BE RE-USED. SEE SPECIFICATIONS FOR SEALING. REMOVE EXISTING DUCT INSULATION TO ACCESS DUCT JOINTS. INSULATE ALL EXISTING SA/RA DUCTS TO REMAIN AND BE RE-USED. SEE SPECIFICATIONS FOR INSULATION REQUIREMENTS.
- COMMISSIONING IS OWNER FURNISHED AND OWNER PROVIDED
- STRUCTURAL MECHANICAL PENTHOUSE UPGRADES UNDER SEPARATE CONTRACT
- ROOFING PATCH AND REPAIR COMPLETED BY ROOFING CONTRACTOR UNDER SEPARATE ROOFING CONTRACT.
- CONTRACTOR IS RESPONSIBLE TO FIELD VERIFY ALL EXISTING DUCT SIZES AS IT CORRESPONDS TO NEW DUCT CONNECTIONS AND LOCATION.

MECHANICAL NOTES (x)

A. ROUTE NEW LINED DUCT UP THRU ROOF TO NEW ROOFTOP EQUIPMENT. SEE M4 SERIES FOR ROOF PLAN. SIZE AS SHOWN.
B. CONNECT NEW DUCT (LINE IF SHOWN) TO EXISTING. SIZE AS SHOWN.
C. RE-BALANCE (E) GRILLE TO CFM LISTED.
D. 40X20 LINED RA FROM AHU/GYM ON ROOF. ROUTE DUCT THRU EXISTING OPENING INTO MEZZANINE SPACE WHERE LOUVER WAS REMOVED.
E. CONTROL DAMPER AIRFLOW RATE/SIZE LISTED.
F. PROVIDE AIR SCOOP FOR TRANSITION INTO LOWER DUCT.
G. COORDINATE FRAMING MODIFICATIONS OF EXISTING CEILING FRAMING NO LONGER USED TO ALLOW SERVICE ACCESS TO COILS. THE SERVICE ACCESS MUST LINE UP WITH THE NEW TEE BAR CEILING BELOW. ACCESS SHALL BE MIN. OF 24"x 24". TRANSITION NEW SA TO/FROM COIL.
H. OWNERS CONTROL CONTRACTOR TO PROVIDE NEW DIGITAL CONTROLS.
I. EXISTING MECHANICAL PENTHOUSE TO BE INCREASED IN SIZE FOR NEW UNITS. SEE STRUCTURAL.
J. CONNECT NEW DUCT TO (E) DIFFUSER.

REGISTERED PROFESSIONAL ENGINEER
17884
JULY 25, 1989
SCOTT W. MILLER
EXPIRES: 31DEC20

Date:	10-16-2020 PERMIT SET
Proj No:	10054
Drawn By:	JHB
Chkd By:	SWM
DSGN By:	SWM
Acad File:	

SUNRISE ELEMENTARY SCHOOL
MECHANICAL EQUIPMENT REPLACEMENT
730 SE 19TH AVE
ALBANY OREGON 97322

MECHANICAL ROOF PLAN

MFIA INC.

Consulting Engineers
2007 S.E. Ash St.
Portland, OR 97214
PHN: (503) 234-0548
FAX: (503) 234-0677
WWW.MFIA-ENG.COM

SHEET
M4.0

MECHANICAL GENERAL NOTES

- ALL RETURN DUCTWORK, AND GRILLES SHALL BE CLEANED PER SPECIFICATIONS.
- CONTROLS ARE OWNER PROVIDED AND OWNER INSTALLED. CONTROL VALVES ARE OWNER PROVIDED AND CONTRACTOR INSTALLED. COORDINATE WITH OWNER TO ALLOW TIME FOR CONTROL INSTALL TO OCCUR BEFORE SCHEDULING UNIT START UP.
- HVAC AIR HANDLERS AND RTU ARE OWNER PROVIDED CONTRACTOR INSTALLED. NEW EQUIPMENT CURBS AND INSTALLED. COORDINATE W/ FRAMING AND ROOFING CONTRACTOR FOR CURB INSTALLATION.
- SEAL ALL EXISTING SHEETMETAL SA/RA TO REMAIN AND BE RE-USED. SEE SPECIFICATIONS FOR SEALING. REMOVE EXISTING DUCT INSULATION TO ACCESS DUCT JOINTS. INSULATE ALL EXISTING SA/RA DUCTS TO REMAIN AND BE RE-USED. SEE SPECIFICATIONS FOR INSULATION REQUIREMENTS.
- COMMISSIONING IS OWNER FURNISHED AND OWNER PROVIDED
- STRUCTURAL MECHANICAL PENTHOUSE UPGRADES UNDER SEPARATE CONTRACT
- ROOFING PATCH AND REPAIR COMPLETED BY ROOFING CONTRACTOR UNDER SEPARATE ROOFING CONTRACT.
- CONTRACTOR IS RESPONSIBLE TO FIELD VERIFY ALL EXISTING DUCT SIZES AS IT CORRESPONDS TO NEW DUCT CONNECTIONS AND LOCATION.

MECHANICAL NOTES (x)

A. ROUTE NEW LINED DUCT UP THRU ROOF TO NEW ROOFTOP EQUIPMENT. SEE M4 SERIES FOR ROOF PLAN. SIZE AS SHOWN.
B. CONNECT NEW DUCT (LINE IF SHOWN) TO EXISTING. SIZE AS SHOWN.
C. RE-BALANCE (E) GRILLE TO CFM LISTED.
D. 40X20 LINED RA FROM AHU/GYM ON ROOF. ROUTE DUCT THRU EXISTING OPENING INTO MEZZANINE SPACE WHERE LOUVER WAS REMOVED.
E. CONTROL DAMPER AIRFLOW RATE/SIZE LISTED.
F. PROVIDE AIR SCOOP FOR TRANSITION INTO LOWER DUCT.
G. COORDINATE FRAMING MODIFICATIONS OF EXISTING CEILING FRAMING NO LONGER USED TO ALLOW SERVICE ACCESS TO COILS. THE SERVICE ACCESS MUST LINE UP WITH THE NEW TEE BAR CEILING BELOW. ACCESS SHALL BE MIN. OF 24"x 24". TRANSITION NEW SA TO/FROM COIL.
H. OWNERS CONTROL CONTRACTOR TO PROVIDE NEW DIGITAL CONTROLS.
I. EXISTING MECHANICAL PENTHOUSE TO BE INCREASED IN SIZE FOR NEW UNITS. SEE STRUCTURAL.
J. CONNECT NEW DUCT TO (E) DIFFUSER.

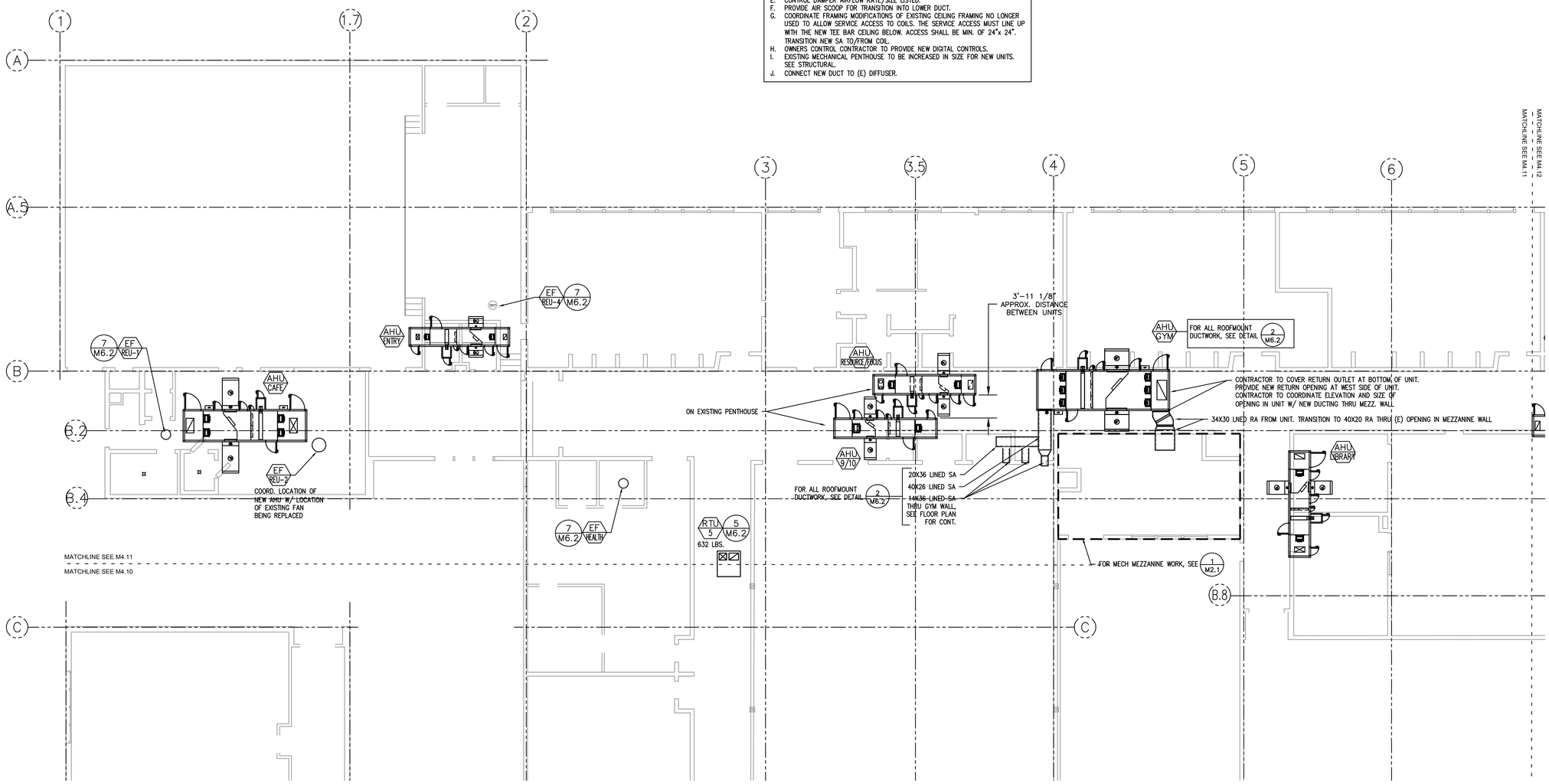

1 / M4.1 MECHANICAL ROOF PLAN – NE
SCALE: 1/8"=1'-0"

REGISTERED PROFESSIONAL ENGINEER
17884
JULY 25, 1989
SCOTT W. MILLER
EXPIRES: 31DEC20

Date:	10-16-2020 PERMIT SET
Proj No:	10054
Drawn By:	JHB
Chkd By:	SWM
DSGN By:	SWM
Acad File:	

SUNRISE ELEMENTARY SCHOOL
MECHANICAL EQUIPMENT REPLACEMENT
730 SE 19TH AVE
ALBANY OREGON 97322

MECHANICAL ROOF PLAN – NE

MFIA INC.
Consulting Engineers
2007 S.E. Ash St.
Portland, OR 97214
PHN: (503) 234-0548
FAX: (503) 234-0677
WWW.MFIA-ENG.COM

SHEET
M4.1

MECHANICAL GENERAL NOTES

- ALL RETURN DUCTWORK, AND GRILLES SHALL BE CLEANED PER SPECIFICATIONS.
- CONTROLS ARE OWNER PROVIDED AND OWNER INSTALLED. CONTROL VALVES ARE OWNER PROVIDED AND CONTRACTOR INSTALLED. COORDINATE WITH OWNER TO ALLOW TIME FOR CONTROL INSTALL TO OCCUR BEFORE SCHEDULING UNIT START UP.
- HVAC AIR HANDLERS AND RTU ARE OWNER PROVIDED CONTRACTOR INSTALLED. NEW EQUIPMENT CURBS AND INSTALLED. COORDINATE W/ FRAMING AND ROOFING CONTRACTOR FOR CURB INSTALLATION.
- SEAL ALL EXISTING SHEETMETAL SA/RA TO REMAIN AND BE RE-USED. SEE SPECIFICATIONS FOR SEALING. REMOVE EXISTING DUCT INSULATION TO ACCESS DUCT JOINTS. INSULATE ALL EXISTING SA/RA DUCTS TO REMAIN AND BE RE-USED. SEE SPECIFICATIONS FOR INSULATION REQUIREMENTS.
- COMMISSIONING IS OWNER FURNISHED AND OWNER PROVIDED
- STRUCTURAL MECHANICAL PENTHOUSE UPGRADES UNDER SEPARATE CONTRACT
- ROOFING PATCH AND REPAIR COMPLETED BY ROOFING CONTRACTOR UNDER SEPARATE ROOFING CONTRACT.
- CONTRACTOR IS RESPONSIBLE TO FIELD VERIFY ALL EXISTING DUCT SIZES AS IT CORRESPONDS TO NEW DUCT CONNECTIONS AND LOCATION.

MECHANICAL NOTES (x)

A. ROUTE NEW LINED DUCT UP THRU ROOF TO NEW ROOFTOP EQUIPMENT. SEE M4 SERIES FOR ROOF PLAN. SIZE AS SHOWN.
B. CONNECT NEW DUCT (LINE IF SHOWN) TO EXISTING. SIZE AS SHOWN.
C. RE-BALANCE (E) GRILLE TO CFM LISTED.
D. 40X20 LINED RA FROM AHU/CFM ON ROOF. ROUTE DUCT THRU EXISTING OPENING INTO MEZZANINE SPACE WHERE LOUVER WAS REMOVED.
E. CONTROL DAMPER AIRFLOW RATE/SIZE LISTED.
F. PROVIDE AIR SCOOP FOR TRANSITION INTO LOWER DUCT.
G. COORDINATE FRAMING MODIFICATIONS OF EXISTING CEILING FRAMING NO LONGER USED TO ALLOW SERVICE ACCESS TO COILS. THE SERVICE ACCESS MUST LINE UP WITH THE NEW TEE BAR CEILING BELOW. ACCESS SHALL BE MIN. OF 24"x 24". TRANSITION NEW SA TO/FROM COIL.
H. OWNERS CONTROL CONTRACTOR TO PROVIDE NEW DIGITAL CONTROLS.
I. EXISTING MECHANICAL PENTHOUSE TO BE INCREASED IN SIZE FOR NEW UNITS. SEE STRUCTURAL.
J. CONNECT NEW DUCT TO (E) DIFFUSER.

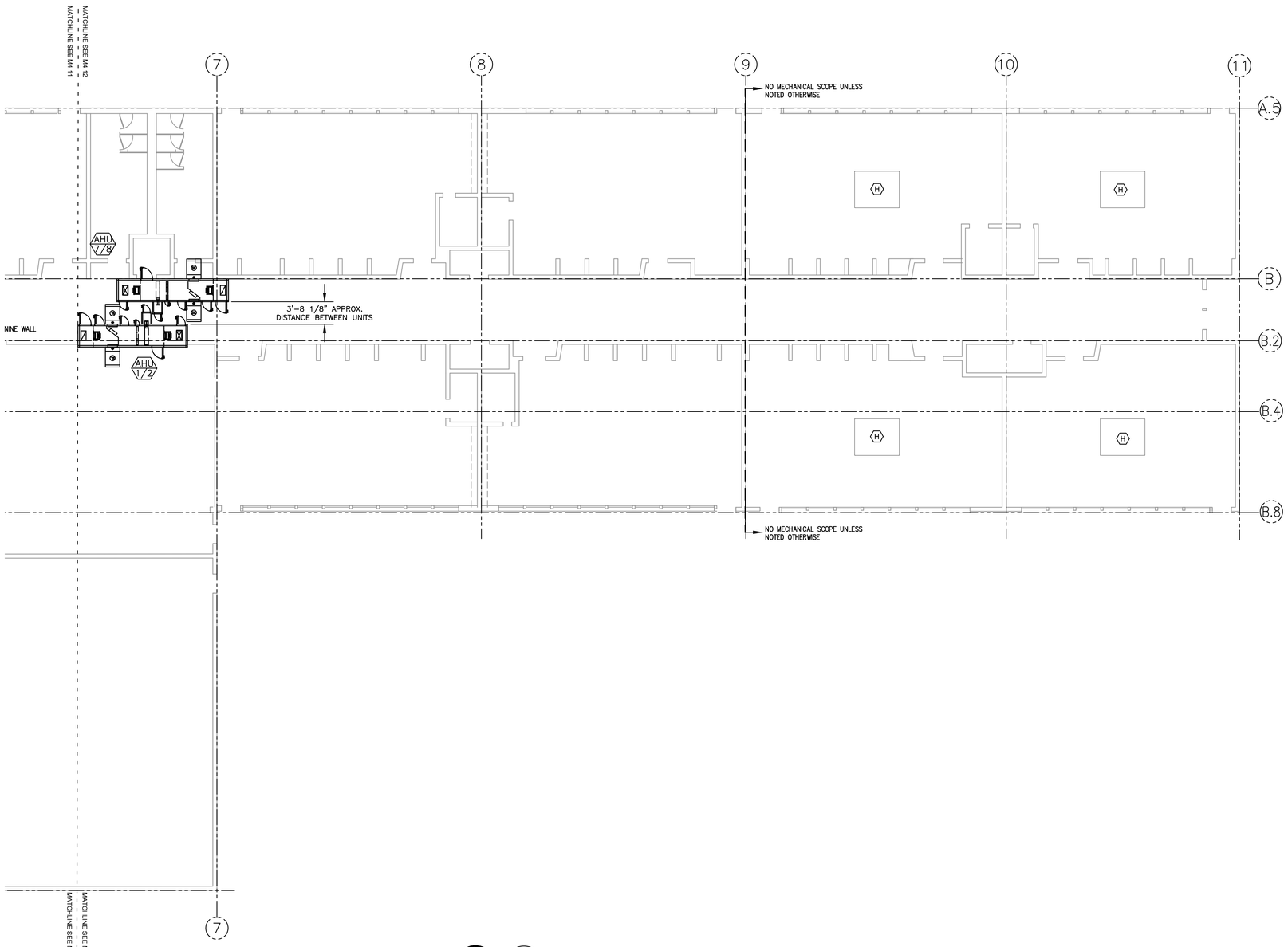

1 / M4.2 MECHANICAL ROOF PLAN – SOUTH
SCALE: 1/8"=1'-0"

REGISTERED PROFESSIONAL ENGINEER
17884
JULY 25, 1989
SCOTT W. MILLER
EXPIRES: 31DEC20

Date:	10-16-2020 PERMIT SET
Proj No:	10084
Drawn By:	JHB
Chkd By:	SWM
DSGN By:	SWM
Acad Files:	

SUNRISE ELEMENTARY SCHOOL
MECHANICAL EQUIPMENT REPLACEMENT
730 SE 19TH AVE
ALBANY OREGON 97322

MECHANICAL ROOF PLAN – SOUTH

MFIA INC.
Consulting Engineers
2007 S.E. Ash St.
Portland, OR 97214
PHN: (503) 234-0548
FAX: (503) 234-0677
WWW.MFIA-ENG.COM

SHEET
M4.2

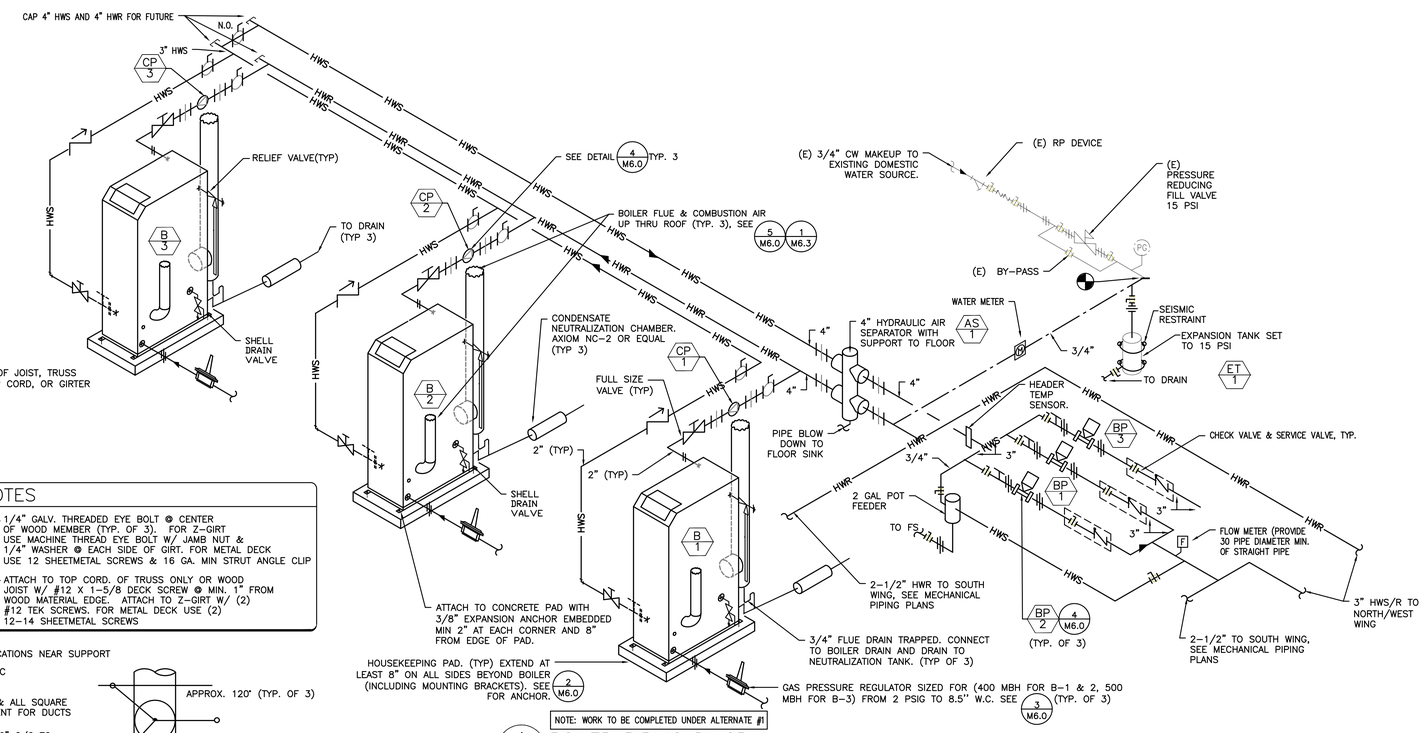

NOTE: WORK TO BE COMPLETED UNDER ALTERNATE #1

1 M6.0 BOILER PIPING DIAGRAM
SCALE: DETAIL

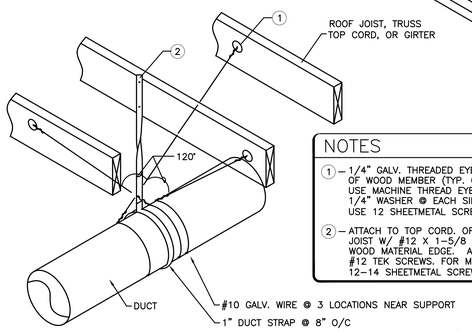

NOTES

1 – 1/4" GALV. THREADED EYE BOLT @ CENTER OF WOOD MEMBER (TYP. OF 3). FOR 2-GIRT USE MACHINE THREAD EYE BOLT W/ JAMB NUT & 1/4" WASHER @ EACH SIDE OF GIRT. FOR METAL DECK USE 12 SHEETMETAL SCREWS & 16 GA. MIN STRUT ANGLE CLIP

2 – ATTACH TO TOP CORD. OF TRUSS ONLY OR WOOD JOIST W/ #12 X 1-5/8 DECK SCREW @ MIN. 1" FROM WOOD MATERIAL EDGE. ATTACH TO 2-GIRT W/ (2) #12 TEK SCREWS. FOR METAL DECK USE (2) 12-14 SHEETMETAL SCREWS

- FOR SHEETMETAL DUCTS 11" TO 27" IN DIAMETER & ALL SQUARE OR RECTANGULAR DUCTS (STRAP ALONE IS SUFFICIENT FOR DUCTS SMALLER THAN 11" IN DIAMETER)
- STRAP INTERVAL MAY BE DECREASED (LESS THAN 96" O/C TO REDUCE THE NEED FOR WIRE TIES AS DETAILED. CONSULT ENGINEER OR SMACNA STANDARDS

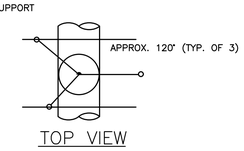

TOP VIEW

10 M6.0 DUCT SUPPORT
SCALE: DETAIL

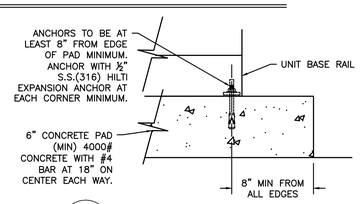

2 M6.0 ANCHORING DETAIL
SCALE: DETAIL

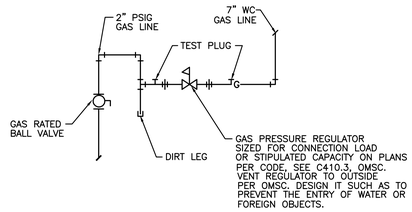

3 M6.0 GAS REG DETAIL
SCALE: DETAIL

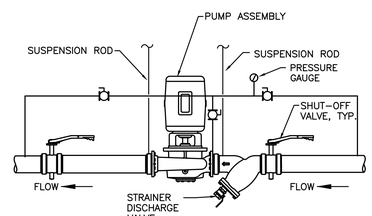

NOTE: WORK TO BE COMPLETED UNDER ALTERNATE #1

4 M6.0 IN-LINE PUMP
SCALE: DETAIL

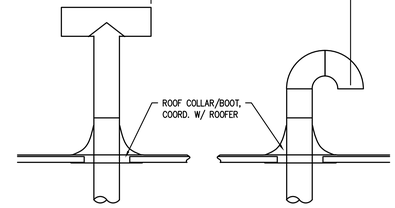

SEE DETAIL 1 M6.3 FOR PENETRATION DETAIL AT ROOF

5 M6.0 BOILER VENT
SCALE: DETAIL

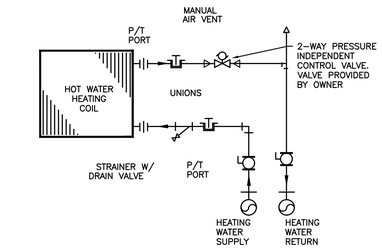

7 M6.0 HEATING COIL PIPING
SCALE: DETAIL

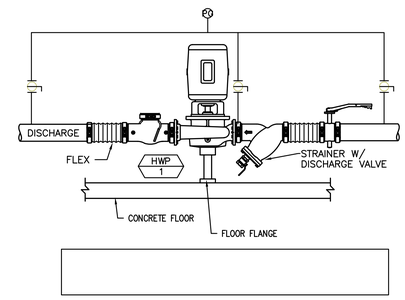

6 M6.0 INLINE PUMP W/ FLEX CONNECTION
SCALE: DETAIL

11/M6.0 NOTES

1 – 1/4" GALV. THREADED EYE BOLT @ CENTER OF WOOD MEMBER (TYP. OF 3). FOR 2 GIRT USE MACHINE THREAD EYE BOLT W/ JAMB NUT & 1/4" WASHER @ EACH SIDE OF GIRT

- FOR SINGLE 1-1/2" TO 3" STEEL LINES
- FOR SINGLE 2" COPPER LINES

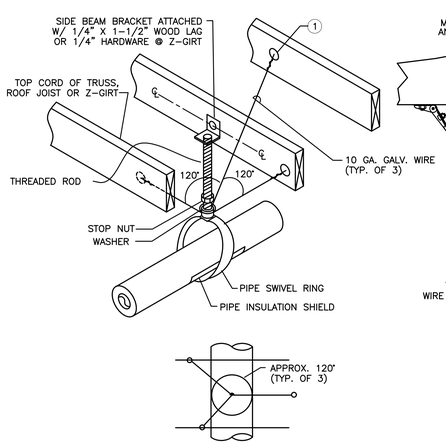

TOP VIEW

11 M6.0 PIPE SUPPORT
SCALE: DETAIL

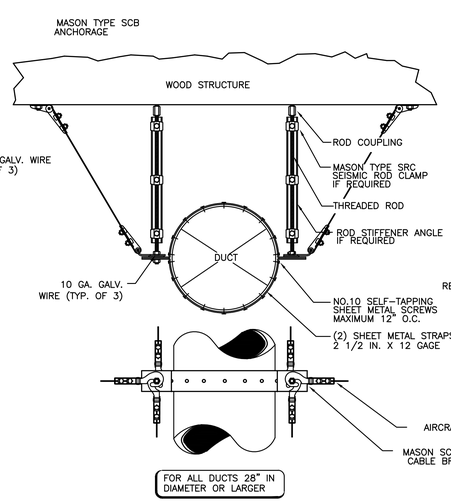

FOR ALL DUCTS 28" IN DIAMETER OR LARGER

ROUND DUCT

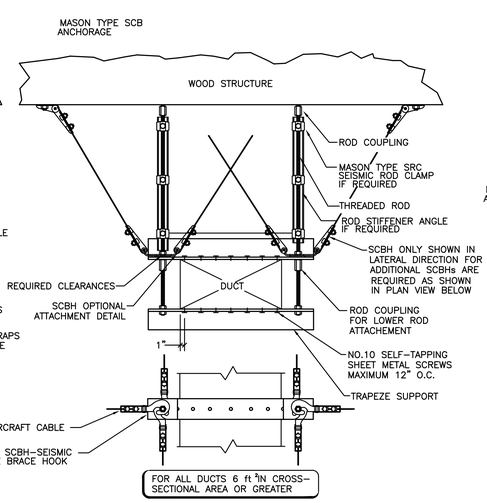

FOR ALL DUCTS 6 ft²IN CROSS-SECTIONAL AREA OR GREATER

RECTANGULAR/OVAL DUCT

NOTE: MATERIALS BASED ON MASON INDUSTRIES. SIZE MATERIALS BASED ON APPLICATION & MANUFACTURER REQUIREMENT.

8 M6.0 PIPE SEISMIC SUPPORT
SCALE: DETAIL

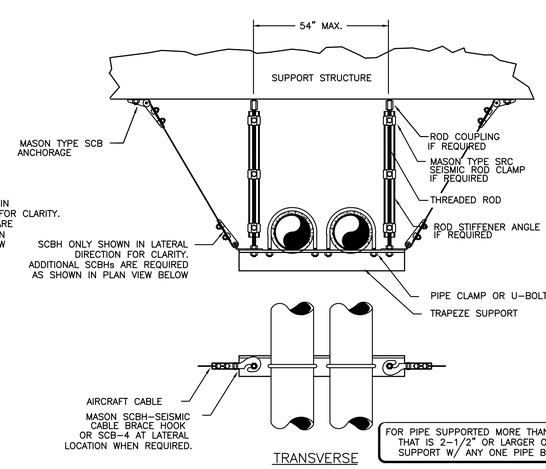

TRANSVERSE

FOR PIPE SUPPORTED MORE THAN 12" FROM STRUCTURE THAT IS 2-1/2" OR LARGER OR ON A TRAPEZE SUPPORT W/ ANY ONE PIPE BEING LARGER THEN 3/4"

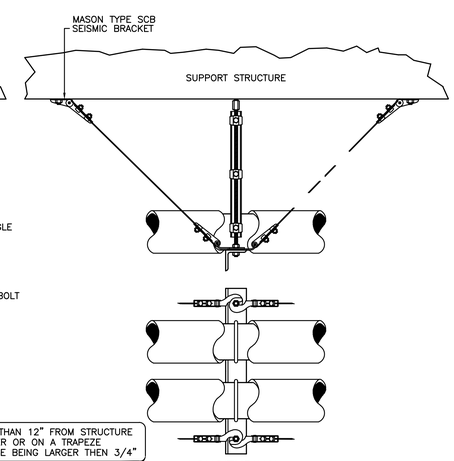

LONGITUDINAL

NOTE: MATERIALS BASED ON MASON INDUSTRIES. SIZE MATERIALS BASED ON APPLICATION & MANUFACTURER REQUIREMENT.

9 M6.0 DUCT SEISMIC SUPPORT
SCALE: DETAIL

REGISTERED PROFESSIONAL ENGINEER 17884 JULY 25, 1989 SCOTT W. MILLER
EXPIRES: 31DEC20

Date:	10-16-2020 PERMIT SET
Proj No:	10084
Drawn By:	JHB
Chkd By:	SWM
DSGN By:	SWM
Acad Files:	

SUNRISE ELEMENTARY SCHOOL
MECHANICAL EQUIPMENT REPLACEMENT
730 SE 19TH AVE
ALBANY OREGON 97322

MECHANICAL SCHEDULES & DETAILS

MFIA INC.
Consulting Engineers
2007 S.E. Ash St.
Portland, OR 97214
PHN: (503) 234-0548
FAX: (503) 234-0677
WWW.MFIA-ENG.COM

SHEET
M6.0

MECHANICAL LEGEND

- SUPPLY AIR DIFFUSER
- RETURN AIR GRILLE
- EXHAUST AIR GRILLE
- PERFORATED RETURN AIR PANEL
- DIRECTIONAL AIR FLOW
- MANUAL VOLUME DAMPER
- SUPPLY OR OUTSIDE AIR DUCT UP & DOWN
- RETURN AIR DUCT UP & DOWN
- EXHAUST AIR DUCT UP & DOWN
- SUPPLY OR OUTSIDE AIR DUCT UP & DOWN
- RETURN AIR DUCT UP & DOWN
- EXHAUST AIR DUCT UP & DOWN
- HOT WATER HEATING COIL
- AC-4 THERMOSTAT OR TEMP. SENSOR
- FLOW SENSOR
- NOTE
- XX ? EQUIPMENT DESIGNATOR
- BALL VALVE
- GATE VALVE
- CHECK VALVE
- BALANCING VALVE
- THERMOMETER
- DIRECTION OF FLOW
- PUMP
- STRAINER
- OR PRESSURE GAUGE
- PETE'S PLUG
- DOUBLE CHECK ASSEMBLY
- PRESSURE REDUCING VALVE
- UNION
- 2-WAY CONTROL VALVE
- 3-WAY CONTROL VALVE
- CAP
- S SMOKE DETECTOR
- MOTORIZED DAMPER
- FD FIRE DAMPER

SEISMIC BRACING

- LATERAL BRACING
- LONGITUDINAL BRACING
- LONGITUDINAL & LATERAL BRACING
- GATE VALVE
- BALL VALVE
- BALANCING VALVE
- CHECK VALVE
- UNION
- DOUBLE CHECK ASSEMBLY

AFF ABOVE FINISH FLOOR
AHU AIR HANDLING UNIT
BOD BOTTOM OF DUCT
BHP BRAKE HORSEPOWER
BTU BRITISH THERMAL UNITS
CFM CUBIC FEET PER MINUTE
CONN. CONNECTION
CONT. CONTINUATION
CW DOMESTIC COLD WATER
DB DRY BULB
DIA. DIAMETER
DIST. DISTRIBUTION
EA EXHAUST AIR
EDB ENTERING DRY BULB TEMPERATURE
EWB ENTERING WET BULB TEMPERATURE
EWT ENTERING WATER TEMPERATURE
FF FINISH FLOOR
FIXT. FIXTURE
FPM FEET PER MINUTE
FPS FEET PER SECOND
FT. FEET / FOOT
GA. GAUGE
GPM GALLONS PER MINUTE
H HEIGHT
HP HORSEPOWER
I.D. INSIDE DIAMETER
IN. INCHES
L LENGTH
LBS. POUNDS
LPS LOW PRESSURE SUPPLY AIR
LDB LEAVING DRY BULB
LWB LEAVING WET BULB
LWT LEAVING WATER TEMPERATURE
MAX. MAXIMUM
MBH THOUSANDS OF BTUs PER HOUR
MIN. MINIMUM
NC NOISE CRITERIA
N.C. NORMALLY CLOSED
N.I.M. NOT IN MECHANICAL
NO. NUMBER
N.O. NORMALLY OPEN
O.A. OUTSIDE AIR
P PERSON
PSI POUNDS PER SQUARE INCH
P/T PRESSURE / TEMPERATURE
R.A. RETURN AIR
RECT. RECTANGULAR
REQ'D REQUIRED
S.A. SUPPLY AIR
S.P. STATIC PRESSURE
SQ. SQUARE
TEMP. TEMPERATURE
TYP. TYPICAL
VAV VARIABLE AIR VOLUME
W WIDTH
WB WET BULB
WPD WATER PRESSURE DROP
ø DIAMETER

- CD (CD) CONDENSATE DRAIN
- G (P) PROPANE
- RF (RF) REFRIGERANT
- HWS (HWS) HEATING WATER SUPPLY
- HWR (HWR) HEATING WATER RETURN
- HWRR (HWRR) HEATING WATER REVERSE RETURN
- (CW) COLD WATER
- (HW) HOT WATER
- (HWR) HOT WATER RECIRC
- T CONTROL TRANSFORMER
- C RELAY COIL
- PRESSURE/TEMP RELIEF VALVE
- BUTTERFLY VALVE
- GAS PRESSURE REGULATING VALVE
- OR TOP CONNECTION
- BOTTOM CONNECTION
- PIPE TURNED UP
- PIPE TURNED DOWN

SUNRISE ELEMENTARY SCHOOL - AIR HANDLING SCHEDULE

EQUIPMENT TAG	* MODEL #	SYSTEM	AIRFLOW (CFM)	MIN. OSA	FLUID FLOW RATE (GPM)	LENGTH X WIDTH X HEIGHT	COIL CONNECTION SIZE
AHU-1/2	XTO-45X45	CLASSROOM 1 & 2	2,300	SEE VENT. SCHEDULE	4.1	215 X 75 X 56	1"
AHU-7/8	XTO-45X45	CLASSROOM 7 & 8	2,300	SEE VENT. SCHEDULE	4.1	219 X 75 X 56	1"
AHU-9/10	XTO-45X45	CLASSROOM 9 & 10	2,800	SEE VENT. SCHEDULE	5.9		1"
AHU-HALL/13	XTO-48X42	OFFICE AREA & CR 13	2,000	SEE VENT. SCHEDULE	3.7	212 X 72 X 59	1"
AHU-14/17	XTO-51X45	CLASSROOM 14 &17	3,300	SEE VENT. SCHEDULE	4.9	214 X 75 X 62	1"
AHU-15/16	XTO-48X42	CLASSROOM 15 & 16	2,300	SEE VENT. SCHEDULE	3.7	215 X 72 X 59	1"
AHU-GYM	XTO-84X84	GYM	10,000	SEE VENT. SCHEDULE	35.5	272 X 93 X 96	2"
AHU-RESOURCE/FOCUS	XTO-48X42	RESOURCE AREA	2,470	SEE VENT. SCHEDULE	3.3	211 X 72 X 59	1"
AHU-LIBRARY	XTO-51X45	MEDIA CENTER	2,800	SEE VENT. SCHEDULE	5.9	218 X 75 X 62	1"
AHU-ENTRY	XTO-27X39	KITCHEN ENTRY	1,000	SEE VENT. SCHEDULE	2.4	206 X 69 X 38	3/4"
AHU-CAFÉ	XTO-66X66	CAFETERIA	6,000	SEE VENT. SCHEDULE	21.6	253 X 96 X 78	2"

NOTE *: MANUFACTURER JOHNSON CONTROLS. UNITS ARE OWNER PROVIDED AND CONTRACTOR INSTALLED

BOILERS - OWNER FURNISHED CONTRACTOR INSTALLED

MARK NUMBER	B 1	B 2	B 3	B 4
BOILER TYPE	CONDENSING	CONDENSING	CONDENSING	CONDENSING
FUEL	NAT. GAS	NAT. GAS	NAT. GAS	NAT. GAS
GAS INPUT. (MBH) MAXIMUM	400	400	500	FUTURE
GROSS OUTPUT (MBH) (AHRI)	392 MINIMUM	392 MINIMUM	489 MINIMUM	
ENT. WATER TEMP (°F)	100	100	100	
LVG. WATER TEMP (°F)	125	125	125	
% PROPYLENE GLYCOL	0	0	0	
EXH VENT DIAMETER	4"ø	4"ø	4"ø	
EXH VENT TYPE	SCHEDULE 80 PVC	SCHEDULE 80 PVC	SCHEDULE 80 PVC	
COMBUSTION AIR INTAKE DIA.	4"ø	4"ø	4"ø	
AHRI COMBUSTION EFFICIENCY*	94% MINIMUM	94% MINIMUM	94% MINIMUM	
BOILER DESIGN WEIGHT (LBS)	545	545	570	
BASIS OF DESIGN	LOCHINVAR FTXL SERIES	LOCHINVAR FTXL SERIES	LOCHINVAR FTXL SERIES	

* – SEE SPECS

NOTES:
1. TO BE INSTALLED UNDER ALTERNATE #1

ROOF TOP HVAC UNIT

MARK NUMBER		RTU 5
SYSTEM		OFFICE/HEALTH
TYPE		GAS PACK
FAN SECTION	TOTAL CFM	1000
	ECONOMIZER	YES
	MIN. OSA (CFM)	135
	EXTERNAL SP. ("H20)	1.0"
	RPM	1050
	MOTOR HP.	1/2
	POWER EXH FAN	NO
MIN FILTER AREA SQ. FT.		3.3
FILTER TYPE		2"MERV 8
HEATING	GAS INPUT (MBH)	60
	EFF.	82%
	STAGES	2
COOLING	TOTAL CLG. (TONS)	2.0
	ENT. EVAP AIR TEMP (DB/WB.)	80.0/67.0
	AMBIENT AIR (°F)	95
EER/SEER		13.5/15.7
VOLTAGE/PH		230/1
MCA		18
MOCP		25
DESIGN WEIGHT (LBS.)		554
SMOKE DETECTOR		NO
ISOLATION CURB		NO
BASIS OF DESIGN RUUD		RGEA 16 SERIES

* – UNIT IS OWNER PROVIDED AND CONTRACTOR INSTALLED

HOT WATER HEATING COILS

MARK NUMBER RHC #	10	1, 8, 13, 16, HALL	FOCUS	RESOURCE 2, 7, 15	LIB-1	LIB-2	LIB-3	14, 17	9	STAFF
TYPE	STANDARD									
CFM	1200	1000	800	1300	2000	200	600	1550	1600	400
ENTERING AIR TEMP (°F.)	85.0	85.0	85.0	85.0	85.0	85.0	85.0	85.0	85.0	85.0
LEAVING AIR TEMP (°F.)	110.1	110.4	110.1	110.1	110.1	110.1	110.1	110.1	110.1	110.1
ENTERING WATER TEMP. (°F.)	125.0	125.0	125.0	125.0	125.0	125.0	125.0	125.0	125.0	125.0
LEAVING WATER TEMP (°F.)	100.1	100.1	100.1	100.1	100.1	100.1	100.1	100.1	100.1	100.1
TOTAL CAPACITY (MBH)	33.2	27.9	22.1	35.1	54.0	5.4	16.2	41.9	43.2	10.8
FLOW RATE (GPM)	2.65	2.23	1.76	3.0	5.00	0.5	1.5	4.0	4.0	1.0
FACE AREA (SQ FT)	2.92	2.62	2.00	3.2	5.0	0.5	1.2	3.9	4.0	1.0
FACE VELOCITY (FPM)	411.43	380.95	400	400	400	400	400	400	400	400
MIN ROWS	4	4	4	4	4	4	4	4	4	4
MAX FINS/INCH	13	13	14	14	14	14	14	14	14	14
MAX AIR PRESS DROP ("H20)	0.34	0.3	0.35	0.35	0.35	0.35	0.35	0.35	0.35	0.35
MAX WATER PRESS DROP ("H20)	9.17	6.12	3.29	3.29	3.29	3.29	3.29	3.29	3.29	3.29
DUCT SIZE (W x H)	20X10	18X10	14X10	20X10	24X12	8X8	12X10	24X10	24X10	18X6

NOTE: ALL COILS ARE CONTRACTOR PROVIDED AND CONTRACTOR INSTALLED.

PUMPS

MARK NUMBER	*BP 1	*BP 2	*BP 3	*CP 1	*CP 2	*CP 3	RP 1
SERVICE	HEATING WATER			B-1		B-3	WATER HEATER
TYPE	INLINE			INLINE		INLINE	INLINE
FLOW RATE (GPM)	125			30		40	5
HEAD (FT)	50			12		12	15
PROPYLENE GLYCOL	0%			0%		0%	0%
MOTOR HP (WATTS)	2			1/2		1/2	1/12
VFD/EC MOTOR	VFD			EC		EC	–
ELECTRICAL SERVICE	240/1ø (NOTE 2)			240/1ø		240/1ø	120/1ø
DESIGN WEIGHT	75 LBS.			45 LBS.		45 LBS.	25 LBS.
BASIS OF DESIGN	B&G 70-145			B&G ECOCIRC XL 55-45		B&G ECOCIRC XL 55-45	GRUNDFOS ALPHA 2 26-99

* PUMP IS OWNER PROVIDED, CONTRACTOR INSTALLED

NOTES:
1. TO BE INSTALLED UNDER ALTERNATE #1.
2. INCOMING POWER TO VFD TO 240/1. PUMP MOTOR IS 208/3. SELECT VFD FOR THIS APPLICATION.

WATER HEATER SCHEDULE

MARK NUMBER	WH 1
FUEL	NATURAL GAS
INPUT (MBH)	76
EFFICIENCY	94%
TANK SIZE (GAL)	80
RECOVERY RATE* (GPH)	97
DESIGN WEIGHT (LB)	800
BASIS OF DESIGN:	HTP PH-76-80

*(100°F DT)

NOTES:
1. TO BE INSTALLED UNDER ALTERNATE #1

EXHAUST FAN

MARK NUMBER	EF REU-1	EF REU-2	EF REU-4	EF HEALTH
TYPE	ROOFTOP	ROOFTOP	ROOFTOP	ROOFTOP
SERVICE	(E) DISHWASHER	(E) COOKING HOOD	ENTRY RR'S 25A & 25B	HEALTH 12A
CFM	600	2600	150	100
TOTAL SP (INCHES H20)	0.5	1.0	0.25	0.25
WHEEL TYPE/SIZE	F.C.	B.I.	B.I.	B.I.
MOTOR HP	0.25	1	1/10	1/10
CONTROL	(E)	(E)	(E)	W/ RTU-5
MOTORIZED BACKDRAFT DMP	YES	NO	NO	NO
DESIGN WEIGHT	50	84	30	30
VOLTAGE/PHASE	120/1	120/1	120/1	120/1
VFD / EC MOTOR	EC	EC	EC	EC
BASIS OF DESIGN (GREENHECK)	G-098-VG	CUE-161-VG	G-080-VG	G-080-VG

NOTE:
PRIOR TO SUBMITTAL COORDINATE VOLTAGE/PHASE FOR EF-REU-1 & REU-2 W/ ELECTRICAL CONTRACTOR FOR EXISTING CONDITIONS AS FANS ARE REPLACEMENTS.

EXPANSION TANK SCHEDULE

MARK NUMBER	ET 1
SYSTEM	BOILERS
LOCATION	BOILER ROOM
TYPE	BLADDER
TANK VOLUME (GALLONS)	132 GAL.
ACCEPTANCE VOLUME	132 GAL.
FLUID TYPE	WATER
DIMENSIONS – DIAxLENGTH (INCHES)	24"X79"
SYSTEM CONNECTIONS SIZE (INCHES)	1"
MAX TEMPERATURE (DEG F)	180
INITIAL CHARGE (PSI)	15
MAX WORKING PRESSURE (PSIG)	150
DESIGN WEIGHT (LBS)	1475
BASIS OF DESIGN	AMTROL 500L
REMARKS/NOTES	1,2

NOTES:
1. PROVIDE VERTICAL UNIT.
2. PROVIDE SEISMIC RESTRAINT.
3. TO BE INSTALLED UNDER ALTERNATE #1

AIR SEPARATOR SCHEDULE

MARK NUMBER	AS 1
SYSTEM	BUILDING 800
LOCATION	BOILER ROOM
TYPE	AIR AND DIRT
SYSTEM FLOW (GPM)	195
FLUID TYPE	WATER
SYSTEM CONNECTIONS SIZE (INCHES)	4
MAX HEAD LOSS (FT)	1
DESIGN WEIGHT (LBS)	160
BASIS OF DESIGN	CALEFFI NA 549 SEP4
REMARKS/NOTES	1,2,3

NOTES:
1. PROVIDE DRAIN VALVE.
2. PROVIDE AIR VENT.
3. PROVIDE SEISMIC RESTRAINT.
4. TO BE INSTALLED UNDER ALTERNATE #1.

SUNRISE ES - CONVECTOR SCHEDULE

MARK NO.	CV-1A	CV-1B	CV-2
LOCATION	GIRLS 26	BOYS 27	CORRIDOR C5
SIZE (W x H x D)	44x32x4	44x34x4	64x38x6
FLOW RATE (GPM)	0.35	0.35	1.3
EWT/LWT	130/100	130/100	130/100
CAPACITY (BTU/HR)	1990	1990	4500
BASIS OF DESIGN: STERLING	FWG-A TYPE	FWG-A-TYPE	FWG-A-TYPE

AIR DISTRIBUTION DETAILS

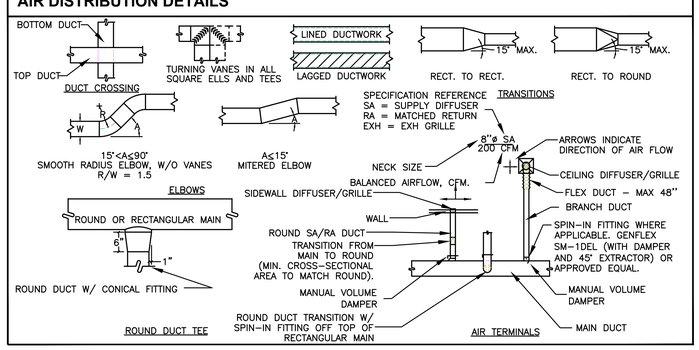

SUNRISE ES - ZONE DAMPER SCHEDULE

MARK NO.	ZD-1, 8, 13, 16 & HALL	ZD-2, 7 & 15	ZD-9	ZD-10	ZD-14 & 17	ZD-FOCUS	ZD-STAFF	ZD-RESOURCE	ZD-LIB1	ZD-LIB2	ZD-LIB3
DAMPER SIZE (REC)	14X12	16X12	18X12	16X12	18X12	12X10	10X10	18X14	20X16	8X8	12X10
AIRFLOW (MIN./MAX.)	1000/383	1300/383	1600/420	1200/383	1550/415	770/115	400/25	1300/395	2000/509	200/18	600/39

REGISTERED PROFESSIONAL ENGINEER 17884 JULY 25, 1989 SCOTT W. MILLER
EXPIRES: 31DEC20

Date: 10-16-2020 PERMIT SET
Proj No: 10064
Drawn By: JHB
Chkd By: SWM
DSGN By: SWM
Acad File:

SUNRISE ELEMENTARY SCHOOL
MECHANICAL EQUIPMENT REPLACEMENT
730 SE 19TH AVE
ALBANY OREGON 97322

MECHANICAL SCHEDULES

MFIA INC.
Consulting Engineers
2007 S.E. Ash St.
Portland, OR 97214
PHN: (503) 234-0548
FAX: (503) 234-0677
WWW.MFIA-ENG.COM

SHEET
M6.1

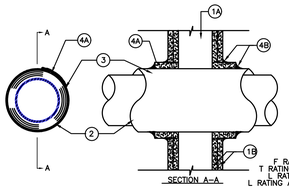

SYSTEM NO. W-L-5001
(FORMERLY SYSTEM NO. 147)
F RATING – 1 AND 2 HR (SEE ITEM 1)
T RATING – 3/4 AND 1.5 HR (SEE ITEM 3)
L RATING AT AMBIENT – 2 CFM/SQ. FT.
L RATING AT 400 F – LESS THAN 1 CFM / SQ. FT.

1. WALL ASSEMBLY – THE 1 AND 2 HR FIRE –RATED GYPSUM WALLBOARD / STUD WALL ASSEMBLY SHALL BE CONSTRUCTED OF THE MATERIALS AND IN THE MANNER DESCRIBED IN THE INDIVIDUAL U300 AND U400 SERIES WALL OR PARTITION DESIGN IN THE UL FIRE RESISTANCE DIRECTORY AND SHALL INCLUDE THE FOLLOWING CONSTRUCTION FEATURES:

A. STUDS – WALL FRAMING MAY CONSIST OF EITHER WOOD STUD OR STEEL CHANNEL STUD. WOOD STUDS TO CONSIST OF NOM 2 BY 4 IN. LUMBER SPACED 16. IN. OC WITH NOM 2 BY 4 IN. LUMBER END PLATES AND CROSS BRACES. STEEL STUDS TO BE MIN 3–5/8 IN. WIDE BY 1–3/8 IN. DEEP CHANNELS SPACED MAX 24 IN. OC.

B. WALLBOARD, GYPSUM* – NOM 5/8 IN. THICK, 4FT. WIDE WITH SQUARE OR TAPERED EDGES. THE GYPSUM WALLBOARD TYPE, THICKNESS, NUMBER OF LAYERS, FASTENER TYPE AND SHEET ORIENTATION SHALL BE AS SPECIFIED IN THE INDIVIDUAL U300 OR U400 SERIES DESIGN IN THE UL FIRE RESISTANCE DIRECTORY. MAX DIAM OF OPENING IS 14–1/2 IN. FOR WOOD STUD WALLS AND 18 IN. FOR STEEL STUD WALLS. THE HOURLY F RATING OF THE FIRESTOP SYSTEM IS 1 HR WHEN INSTALLED IN A 1 HR FIRE RATED WALL AND 2 HR WHEN INSTALLED IN A 2 HR FIRE RATED WALL.

2. THROUGH PENETRANTS – ONE METALLIC PIPE OR TUBING TO BE CENTERED WITH IN THE FIRE STOP SYSTEM. PIPE OR TUBING TO BE RIGIDLY SUPPORTED ON BOTH SIDES OF WALL ASSEMBLY. THE FOLLOW TYPES AND SIZES OF METALLIC PIPES OR TUBING MAY BE USED-

A. STEEL PIPE – NOM 12 IN. DIAM (OR SMALLER) SCHEDULE 10 (OR HEAVIER) STEEL PIPE.

B. COPPER TUBING – NOM 6 IN. DIAM (OR SMALLER) TYPE L (OR HEAVIER) COPPER TUBING.

C. COPPER PIPE – NOM 6 IN. DIAM (OR SMALLER) REGULAR (OR HEAVIER) COPPER PIPE.

3. PIPE COVERING* – NOM 1 AND 2 IN. THICK HOLLOW CYLINDRICAL HEAVY DENSITY (MIN 3.5 PCF) GLASS FIBER UNITS JACKETED ON THE OUTSIDE WITH AN ALL SERVICE JACKET. LONGITUDINAL JOINTS SEALED WITH METAL FASTENERS OR FACTORY – APPLIED SELF – SEALED LAP TAPE. TRANSVERSE JOINTS SEALED WITH METAL FASTENERS OR WITH BUTT STRIP TAPE SUPPLIED WITH THE PRODUCT. WHEN NOM 1 IN. THICK PIPE COVERING IS USED, THE ANNULAR SPACE BETWEEN THE PIPE COVERING AND THE CIRCULAR CUTOUT IN THE GYPSUM WALLBOARD LAYERS ON EACH SIDE OF THE WALL SHALL BE MIN 1/4 IN. TO 3/8 IN. WHEN NOM 2 IN. THICK PIPE COVERING IS USED, THE ANNULAR SPACE BETWEEN THE PIPE COVERING AND THE CIRCULAR CUTOUT IN THE GYPSUM WALLBOARD LAYERS ON EACH SIDE OF THE WALL SHALL BE MIN 1/2 IN. TO MAX 3/4 IN. SEE – PIPE AND EQUIPMENT COVERING – MATERIALS (BRGU) CATEGORY IN BUILDING MATERIALS DIRECTORY FOR NAMES OF MANUFACTURERS. ANY PIPE COVERING MATERIAL MEETING THE ABOVE SPECIFICATIONS AND BEARING THE UL CLASSIFICATION MARKING WITH THE FLAME SPREAD INDEX OF 25 OR LESS AND A SMOKE DEVELOPED INDEX OF 50 OR LESS MAY BE USED. THE HOURLY T RATING OF THE THE FIRESTOP SYSTEM IS 3/4 HR WHEN NOM 1 IN. THICK PIPE COVERING IS USED. THE HOURLY T RATING OF THE FIRESTOP SYSTEM IS 1 HR AND 1.5 HR WHEN NOM 2 IN. THICK PIPE COVERING IS USED WITH 1 HR AND 2 HR FIRE RATED WALLS, RESPECTIVELY.

4. FIRESTOP SYSTEM – INSTALLED SYMMETRICALLY ON BOTH SIDES OF WALL ASSEMBLY. THE DETAIL OF THE FIRESTOP SYSTEM SHALL BE AS FOLLOWS:

A. FILL, VOID OR CAVITY MATERIAL* – WRAP STRIP – NOM 1/4 IN. THICK INTUMESCENT ELASTOMERIC FACED ON ONE SIDE WITH ALUMINUM FOIL, SUPPLIED IN 2 IN. WIDE STRIPS. NOM 2 IN. WIDE STRIP TIGHTLY WRAPPED AROUND PIPE COVERING (FOIL SIDE OUT) WITH SEAM BUTTED. WRAP STRIP LAYER SECURELY BOUND WITH STEEL WIRE OR ALUMINUM FOIL TAPE AND SLID INTO ANNULAR SPACE APPROX. 1–1/4 IN. SUCH THAT APRROX 3/4 IN. OF THE WRAP STRIP WIDTH PROTRUDES FROM THE WALLSURFACE. ONE LAYER OF WRAP STRIP S REQUIRED WHEN NOM 1 IN. THICK PIPE COVERING IS USED. TWO LAYERS OF WRAP STRIP ARE REQUIRED WHEN NOM 2 IN. THICK PIPE COVERING IS USED. MINNESOTA MINING & MFG. CO. – FS– – 195+

B. FILL, VOID OR CAVITY MATERIAL* – CAULK – MIN 1/4 IN. DIAM CONTINUOUS BEAD APPLIED TO THE WRAP STRIP / WALL INTERFACE AND TO THE EXPOSED EDGE OF THE WRAP STRIP LAYER APPROX. 3/4 IN. FROM THE WALL SURFACE. MINNESOTA MINING & MFG. CO. – CP 25WB+

* – BEARING THE UL CLASSIFICATION MARKING

4 / M6.2 INSULATION PIPE PENETRATION DETAIL
SCALE: DETAIL

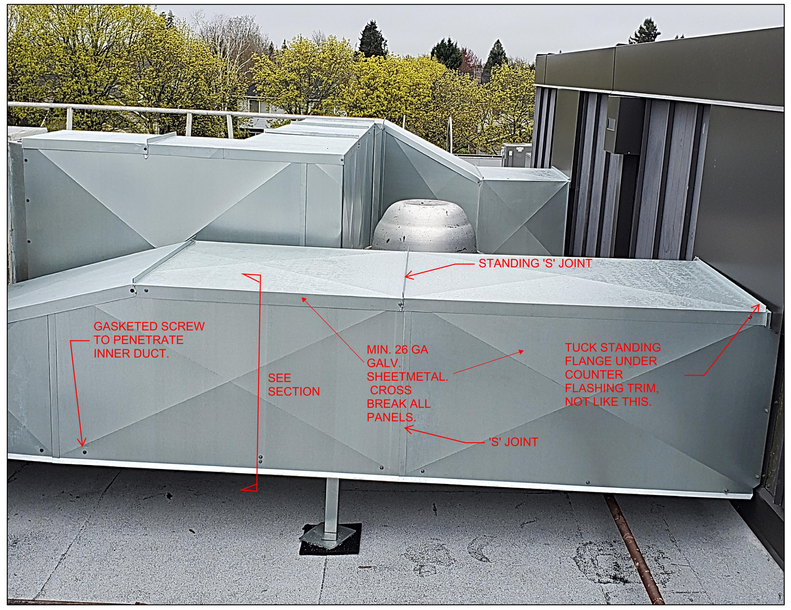

1 / M6.2 ROOF MOUNTED DUCTWORK & SUPPORT
SCALE: DETAIL

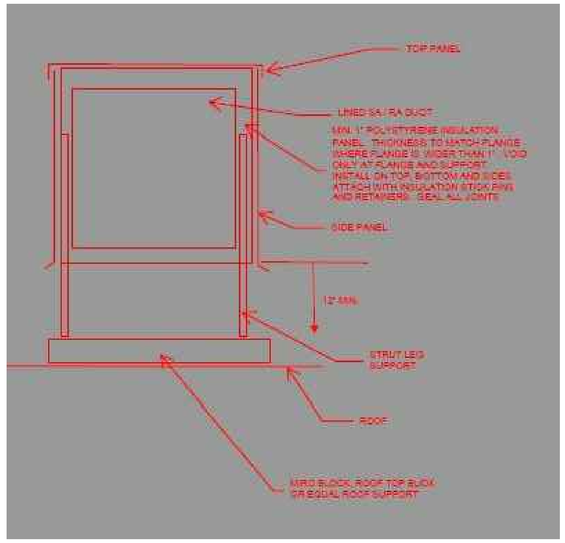

2 / M6.2 ROOF MOUNT DUCTWORK SECTION
SCALE: DETAIL

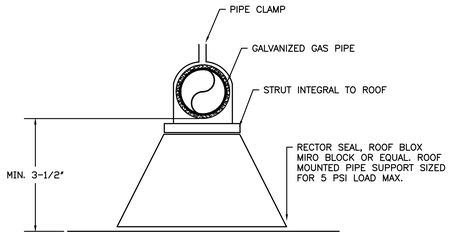

3 / M6.2 ROOF MOUNTED GAS PIPING
SCALE: DETAIL

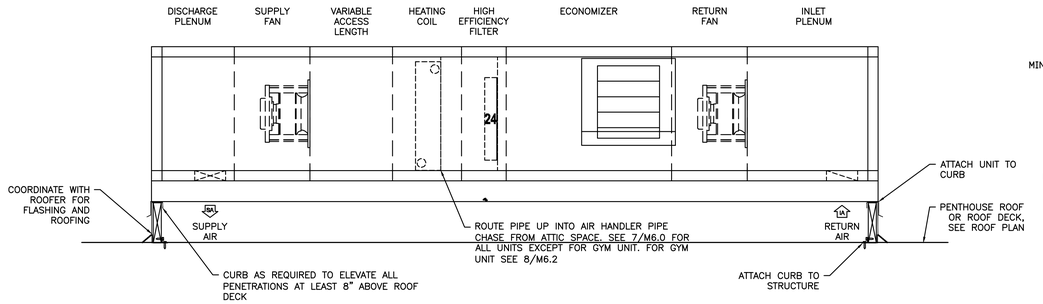

6 / M6.2 AIR HANDLER SECTION
SCALE: DETAIL

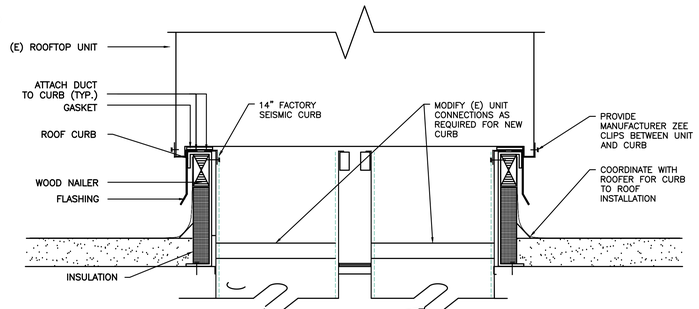

1. CURB AND ROOFING BY OTHERS.
2. SEE M3.1 FOR GAS ROUTING INFORMATION. SEE DETAIL 3/M6.0 FOR REGULATOR

5 / M6.2 RTU DETAIL
SCALE: DETAIL

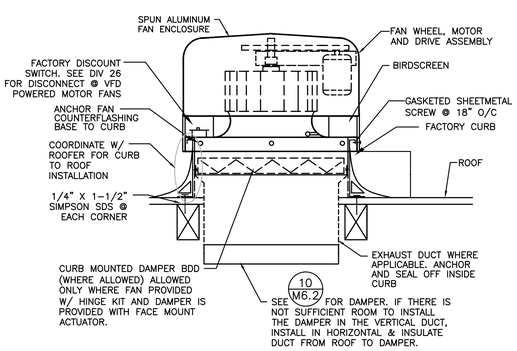

7 / M6.2 ROOFTOP EXHAUST FAN
SCALE: DETAIL

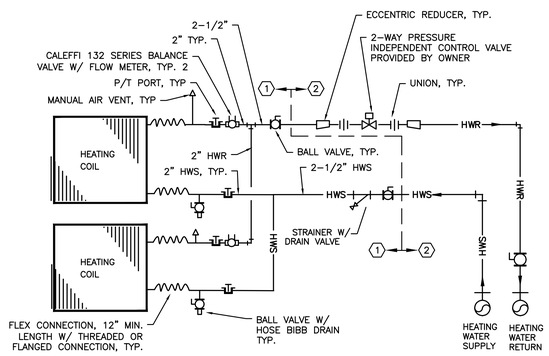

DETAIL NOTES: (#)

1. LOCATE IN AHU PIPE ENCLOSURE.
2. MAY BE LOCATED OUTSIDE AHU PIPE ENCLOSURE.

8 / M6.2 DOUBLE HEATING COIL DETAIL – GYM UNIT
SCALE: DETAIL

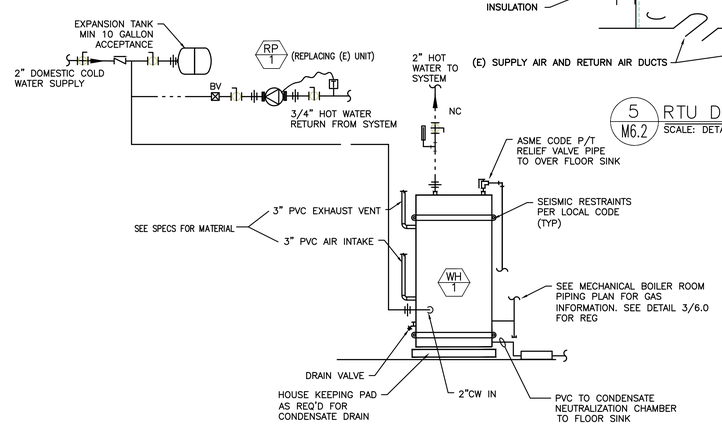

NOTES:
1. SEE DETAIL 1/M6.3 FOR FLUE & COMBUSTION AIR DETAIL THRU ROOF.
2. WORK TO BE COMPLETED UNDER ALTERNATE #1.

9 / M6.2 WATER HEATING SYSTEM
SCALE: DETAIL

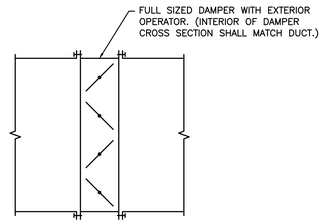

10 / M6.2 DAMPER DETAIL
SCALE: DETAIL

REGISTERED PROFESSIONAL ENGINEER
17884
JULY 25, 1989
SCOTT W. MILLER
EXPIRES: 31DEC20

Date:	10-16-2020 PERMIT SET
Proj No:	10064
Drawn By:	JHB
Chkd By:	SWM
DSGN By:	SWM
Acad Files:	

SUNRISE ELEMENTARY SCHOOL
MECHANICAL EQUIPMENT REPLACEMENT
730 SE 19TH AVE
ALBANY OREGON 97322

MECHANICAL DETAILS

MEIA INC.
Consulting Engineers
2007 S.E. Ash St.
Portland, OR 97214
PHN: (503) 234-0548
FAX: (503) 234-0677
WWW.MEIA-ENG.COM

SHEET
M6.2

Through Penetrations

Non-Metallic Pipes

2000 Series

Wood Frame Floor/Ceiling

FC

System No. F-C-2024

November 20, 2009
F Ratings – 1 and 2 Hr (See Item 1)
T Ratings – 0, 1, 1-1/2 and 2 Hr (See Item 3)

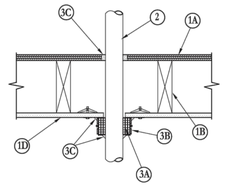

1. **Floor-Ceiling Assembly** – The 1 hr fire-rated solid or trussed lumber joist floor-ceiling assembly shall be constructed of the materials and in the manner specified in the individual L500 Series Floor-Ceiling Designs in the UL Fire Resistance Directory. The 2 hr fire-rated wood joist floor-ceiling assembly shall be constructed of the materials and in the manner specified in Design Nos. L505, L511 or L536 in the UL Fire Resistance Directory. **The F Rating of the firestop system is equal to the rating of the floor-ceiling assembly.** The general construction features of the floor-ceiling assembly are summarized below:
   A. **Flooring System** – Lumber or plywood subfloor with finish floor of lumber plywood or **Floor Topping Mixture*** as specified in the individual Floor-Ceiling Design.
   B. **Wood Joists*** – For 1 hr fire-rated floor-ceiling assemblies nom 10 in. (254 mm) deep (or deeper) lumber, steel or combination lumber and steel joists, trusses or **Structural Wood Members*** with bridging as required and with ends firestopped. For 2 hr fire-rated floor-ceiling assemblies, nom 2 by 10 in. (51 by 254 mm) lumber joists spaced 16 in. (406 mm) OC with nom 1 by 3 in. (25 by 76 mm) lumber bridging and with ends firestopped.
   C. **Furring Channels** – (Not Shown) – Resilient galv steel furring installed perpendicular to wood joists between first and second layers of wallboard (Item 1D) in 2 hr fire-rated assembly. Furring channels spaced max 24 in. (610 mm) OC.
   D. **Gypsum Board*** – Nom 4 ft (122 cm) wide by 5/8 in. (16 mm) thick as specified in the individual Floor-Ceiling Design. First layer of wallboard nailed to wood joists. Second layer of wallboard (2 hr fire-rated assembly) screw-attached to furring channels.
2. **Through Penetrants** – One nonmetallic pipe, conduit or tubing to be installed approx midway between wood joists. Diam of openings hole-sawed through flooring system and through two layers gypsum wallboard ceiling to be 0 to 1/4 in. (0 to 6 mm) larger than the outside diam of through-penetrant. Pipe or conduit to be rigidly supported on both sides of the floor-ceiling assembly. The following types and sizes of nonmetallic pipes or conduits may be used:
   A. **Polyvinyl Chloride (PVC) Pipe** – Nom 4 in. (102 mm) diam (or smaller) Schedule 40 solid-core PVC pipe for use in closed (process or supply) or vented (drain, waste or vent) piping system.
   B. **Cellular-Core Polyvinyl Chloride (ccPVC) Pipe** – Nom 4 in. (102 mm) diam (or smaller) Schedule 40 cellular core PVC pipe for use in closed (process or supply) or vented (drain, waste or vent) piping system.
   C. **Chlorinated Polyvinyl Chloride (CPVC) Pipe** – Nom 4 in. (102 mm) diam (or smaller) SDR13.5 CPVC pipe for use in closed (process or supply) piping systems.
   D. **Acrylonitrile Butadiene Styrene (ABS) Pipe** – Nom 4 in. (102 mm) diam (or smaller) Schedule 40 solid-core ABS pipe for use in closed (process or supply) or vented (drain, waste or vent) piping systems.
   E. **Cellular-Core Acrylonitrile Butadiene Styrene (ccABS) Pipe** – Nom 4 in. (102 mm) diam (or smaller) Schedule 40 cellular core ABS pipe for use in closed (process or supply) or vented (drain, waste or vent) piping systems.
3. **Firestop System** – The details of the firestop system shall be as follows:
   A. **Fill, Void or Cavity Materials*** – **Wrap Strip** – Nom 1/4 in. (6 mm) thick intumescent elastomeric material faced on one side with aluminum foil, supplied in 1 and 2 in. (25 and 51 mm) wide strips. Strips tightly wrapped around nonmetallic pipe (foil side exposed) with the edges butted against the bottom surface of the gypsum wallboard ceiling. The min wrap strip width, the number of layers of wrap strip required, the type of pipe and the nom diam, as well as the F and T Rating of the system are shown in the following table:

Pipe Type	Nom Pipe Diam In. (mm)	F Rating Hr	T Rating Hr	Wrap Strip Width In. (mm)	Min Wrap Strip Layers
PVC, CPVC, ABS, ccPVC or ccABS (a)	1/2 to 1-1/2 (13 to 38)	1	1	1 (25)	1
PVC, CPVC, ABS, ccPVC, or ccABS (a)	2 to 2-1/2 (51 to 64)	1	1	1 (25)	2
PVC, CPVC, ABS,ccPVC or ccABS (a)	3 (76)	1	1	1 (25)	3
PVC, CPVC, ABS,ccPVC or ccABS (a)	1/2 to 2 (13 to 51)	1	1	2 (51)	1
PVC, CPVC, ABS or ccPVC	2-1/2 to 4 (64 to 102)	1	1	2 (51)	2
ccABS (a)	2-1/2 to 3 (64 to 76)	1	1/2	2 (51)	2
ccABS (a)	3-1/2 to 4 (89 to 102)	1	1/2	2 (51)	3
PVC, CPVC, ABS, or ccPVC	1/2 to 1-1/2 (13 to 38)	2	1-1/2	1 (25)	1
ccABS (a)	1/2 to 1-1/2 (13 to 38)	2	2	2 (51)	2
ABS, PVC, ccPVC, or CPVC	1/2 to 2 (13 to 51)	2	1-1/2	2 (51)	1
ABS, PVC, ccPVC or CPVC	2-1/2 to 3 (64 to 76)	2	1-1/2	2 (51)	2
ABS	3-1/2 to 4 (89 to 102)	2	1-1/2	2 (51)	3
PVC, ccPVC or CPVC	3-1/2 to 4 (89 to 102)	2	2	2 (51)	3

(a) – Requires use of aluminum tape detailed in Item 3D
3M COMPANY – FS-195+

3M Fire Protection Products
www.3m.com/firestop

F-C-2024 • 1 of 2

Product Support Line
1-800-328-1687

1 / M6.3 BOILER & WATER HEATER FLUE & COMBUSTION AIR
SCALE: DETAIL

VENTILATION AIR SCHEDULE - RESOURCE & FOCUS AREA

ROOM NUMBER AND NAME	AREA (SQ. FT.)	OCCUPANT LOAD (#/1000 SQ. FT.)	NUMBER OF OCCUPANTS	OUTSIDE AIR REQUIREMENT (CFM/P)	OUTSIDE AIR REQUIREMENT (CFM/SQ FT.)	OUTSIDE AIR REQUIRED (CFM)		ZONE OSA (CFM)	SUPPLY AIR (CFM)	PRIMARY OSA FRACTION	ZONE VENTILATION EFFECIENCY	CORRECTED OSA CFM	AIR SYSTEMS
	Az		Pz	Rp	Ra	Vbz	Ez	Voz	Vpz	Zp	Evz		
STAFF 40	325	4	1	5	0.06	25	1.0	25	400	0.06	1.14	31	AHU/RESOURCE-FOCUS
RESOURCE/COMPUTER 11	1035	25	26	10	0.12	383	1.0	383	1000	0.38	0.78	489	AHU/RESOURCE-FOCUS
OFFICE 42	185	5	1	5	0.06	14	1.0	14	100	0.14	0.94	14	AHU/RESOURCE-FOCUS
OFFICE 43	530	5	2	5	0.06	39	1.0	39	670	0.06	1.01	40	AHU/RESOURCE-FOCUS
CORRIDOR	622	0	0	0	0.06	37	1.0	37	300	0.12	0.95	38	AHU/RESOURCE-FOCUS
TOTAL	**2697**					**498**		**498**	**2470**		**0.78**	**612**	
								Vou	**Vps**		**Ev**		
					CORRECTED TOTAL OUTDOOR AIR FLOW RATE (CFM)					**635**	**CORRECTED OSA FRACTION**	**Zs =**	**0.25**

VENTILATION AIR SCHEDULE - RTU-5

ROOM NUMBER AND NAME	AREA (SQ. FT.)	OCCUPANT LOAD (#/1000 SQ. FT.)	NUMBER OF OCCUPANTS	OUTSIDE AIR REQUIREMENT (CFM/P)	OUTSIDE AIR REQUIREMENT (CFM/SQ FT.)	OUTSIDE AIR REQUIRED (CFM)		ZONE OSA (CFM)	SUPPLY AIR (CFM)	PRIMARY OSA FRACTION	ZONE VENTILATION EFFECIENCY	CORRECTED OSA CFM	AIR SYSTEMS
	Az		Pz	Rp	Ra	Vbz	Ez	Voz	Vpz	Zp	Evz		
OFFICE 12	763	5	2	5	0.06	56	1.0	56	600	0.09	0.98	57	RTU-5
PRINCIPAL 12C	135	5	1	5	0.06	11	1.0	11	275	0.04	1.03	11	RTU-5
OFFICE 12B	55	5	1	5	0.06	6	1.0	6	125	0.05	1.03	6	RTU-5
TOTAL	**953**		**3**			**72.18**		**72.18**	**1000**		**0.98**	**74**	
								Vou	**Vps**		**Ev**		
					CORRECTED TOTAL OUTDOOR AIR FLOW RATE (CFM)					**74**	**CORRECTED OSA FRACTION**	**Zs =**	**0.07**

VENTILATION AIR SCHEDULE - AHU-1 /2

ROOM NUMBER AND NAME	AREA (SQ. FT.)	OCCUPANT LOAD (#/1000 SQ. FT.)	NUMBER OF OCCUPANTS	OUTSIDE AIR REQUIREMENT (CFM/P)	OUTSIDE AIR REQUIREMENT (CFM/SQ FT.)	OUTSIDE AIR REQUIRED (CFM)		ZONE OSA (CFM)	SUPPLY AIR (CFM)	PRIMARY OSA FRACTION	ZONE VENTILATION EFFECIENCY	CORRECTED OSA CFM	AIR SYSTEMS
	Az		Pz	Rp	Ra	Vbz	Ez	Voz	Vpz	Zp	Evz		
CLASSROOM 1	1035	25	26	10	0.12	383	1.0	383	1000	0.38	0.78	489	AHU-1/2
CLASSROOM 2	1035	25	26	10	0.12	383	1.0	383	1000	0.38	0.78	489	AHU-1/2
CORRIDOR	622	0	0	0	0.06	37	1.0	37	300	0.12	0.95	38	AHU-1/2
TOTAL	**2692**		**52**			**803**		**383**	**2300**		**0.78**	**1016**	
								Vou	**Vps**		**Ev**		
					CORRECTED TOTAL OUTDOOR AIR FLOW RATE (CFM)					**489**	**CORRECTED OSA FRACTION**	**Zs =**	**0.44**

VENTILATION AIR SCHEDULE - AHU/GYM

ROOM NUMBER AND NAME	AREA (SQ. FT.)	OCCUPANT LOAD (#/1000 SQ. FT.)	NUMBER OF OCCUPANTS	OUTSIDE AIR REQUIREMENT (CFM/P)	OUTSIDE AIR REQUIREMENT (CFM/SQ FT.)	OUTSIDE AIR REQUIRED (CFM)		ZONE OSA (CFM)	SUPPLY AIR (CFM)	PRIMARY OSA FRACTION	ZONE VENTILATION EFFECIENCY	CORRECTED OSA CFM	AIR SYSTEMS
	Az		Pz	Rp	Ra	Vbz	Ez	Voz	Vpz	Zp	Evz		
GYM	4300	7	16	20	0.18	1084	1.0	1084	9995	0.11	1.06	1383	
TOTAL	**4300**		**16**			**1084**		**1084**	**9995**		**1.06**	**1383**	
								Vou	**Vps**		**Ev**		
					CORRECTED TOTAL OUTDOOR AIR FLOW RATE (CFM)					**1025**	**CORRECTED OSA FRACTION**	**Zs =**	**0.14**

VENTILATION AIR SCHEDULE - AHU-7/8

ROOM NUMBER AND NAME	AREA (SQ. FT.)	OCCUPANT LOAD (#/1000 SQ. FT.)	NUMBER OF OCCUPANTS	OUTSIDE AIR REQUIREMENT (CFM/P)	OUTSIDE AIR REQUIREMENT (CFM/SQ FT.)	OUTSIDE AIR REQUIRED (CFM)		ZONE OSA (CFM)	SUPPLY AIR (CFM)	PRIMARY OSA FRACTION	ZONE VENTILATION EFFECIENCY	CORRECTED OSA CFM	AIR SYSTEMS
	Az		Pz	Rp	Ra	Vbz	Ez	Voz	Vpz	Zp	Evz		
CLASSROOM 7	1035	25	26	10	0.12	383	1.0	383	1000	0.38	0.78	489	AHU-7/8
CLASSROOM 8	1035	25	26	10	0.12	383	1.0	383	1000	0.38	0.78	489	AHU-7/8
CORRIDOR	622	0	0	0	0.06	37	1.0	37	300	0.12	0.95	38	AHU-7/8
TOTAL	**2692**		**52**			**803**		**383**	**2300**		**0.78**	**1016**	

VENTILATION AIR SCHEDULE - AHU-9/10

ROOM NUMBER AND NAME	AREA (SQ. FT.)	OCCUPANT LOAD (#/1000 SQ. FT.)	NUMBER OF OCCUPANTS	OUTSIDE AIR REQUIREMENT (CFM/P)	OUTSIDE AIR REQUIREMENT (CFM/SQ FT.)	OUTSIDE AIR REQUIRED (CFM)		ZONE OSA (CFM)	SUPPLY AIR (CFM)	PRIMARY OSA FRACTION	ZONE VENTILATION EFFECIENCY	CORRECTED OSA CFM	AIR SYSTEMS
	Az		Pz	Rp	Ra	Vbz	Ez	Voz	Vpz	Zp	Evz		
CLASSROOM 9	1035	25	26	10	0.12	383	1.0	383	1000	0.38	0.78	489	AHU-9/10
CLASSROOM 10	1035	25	26	10	0.12	383	1.0	383	1000	0.38	0.78	489	AHU-9/10
CORRIDOR	622	0	0	0	0.06	37	1.0	37	200	0.19	0.89	38	AHU-9/10
TOTAL	**2692**		**52**			**803**		**383**	**2200**		**0.78**	**1016**	

VENTILATION AIR SCHEDULE - AHU-HALL/13

ROOM NUMBER AND NAME	AREA (SQ. FT.)	OCCUPANT LOAD (#/1000 SQ. FT.)	NUMBER OF OCCUPANTS	OUTSIDE AIR REQUIREMENT (CFM/P)	OUTSIDE AIR REQUIREMENT (CFM/SQ FT.)	OUTSIDE AIR REQUIRED (CFM)		ZONE OSA (CFM)	SUPPLY AIR (CFM)	PRIMARY OSA FRACTION	ZONE VENTILATION EFFECIENCY	CORRECTED OSA CFM	AIR SYSTEMS
	Az		Pz	Rp	Ra	Vbz	Ez	Voz	Vpz	Zp	Evz		
CLASSROOM 13	1035	25	26	10	0.12	383	1.0	383	1000	0.38	0.78	489	AHU-13/HALL
CORRIDOR C3 & C5	1223	0	0	0	0.06	73	1.0	73	1000	0.07	1.00	75	AHU-13/HALL
TOTAL	**2258**		**26**			**456**		**383**	**2000**		**0.78**	**564**	

VENTILATION AIR SCHEDULE - AHU-15/16

ROOM NUMBER AND NAME	AREA (SQ. FT.)	OCCUPANT LOAD (#/1000 SQ. FT.)	NUMBER OF OCCUPANTS	OUTSIDE AIR REQUIREMENT (CFM/P)	OUTSIDE AIR REQUIREMENT (CFM/SQ FT.)	OUTSIDE AIR REQUIRED (CFM)		ZONE OSA (CFM)	SUPPLY AIR (CFM)	PRIMARY OSA FRACTION	ZONE VENTILATION EFFECIENCY	CORRECTED OSA CFM	AIR SYSTEMS
	Az		Pz	Rp	Ra	Vbz	Ez	Voz	Vpz	Zp	Evz		
CLASSROOM 15	1035	25	26	10	0.12	383	1.0	383	1000	0.38	0.78	489	AHU-15/16
CLASSROOM 16	1035	25	26	10	0.12	383	1.0	383	1000	0.38	0.78	489	AHU-15/16
CORRIDOR	622	0	0	0	0.06	37	1.0	37	300	0.12	0.95	38	AHU-15/16
TOTAL	**2692**		**52**			**803**		**383**	**2300**		**0.78**	**1016**	

VENTILATION AIR SCHEDULE - AHU-14/17

ROOM NUMBER AND NAME	AREA (SQ. FT.)	OCCUPANT LOAD (#/1000 SQ. FT.)	NUMBER OF OCCUPANTS	OUTSIDE AIR REQUIREMENT (CFM/P)	OUTSIDE AIR REQUIREMENT (CFM/SQ FT.)	OUTSIDE AIR REQUIRED (CFM)		ZONE OSA (CFM)	SUPPLY AIR (CFM)	PRIMARY OSA FRACTION	ZONE VENTILATION EFFECIENCY	CORRECTED OSA CFM	AIR SYSTEMS
	Az		Pz	Rp	Ra	Vbz	Ez	Voz	Vpz	Zp	Evz		
CLASSROOM 14	1035	25	26	10	0.12	383	1.0	383	1000	0.38	0.78	489	AHU-14/17
CLASSROOM 17	1035	25	26	10	0.12	383	1.0	383	1000	0.38	0.78	489	AHU-14/17
CUSTODIAN 34	306	0	0	0	0.06	18	1.0	18	300	0.06	1.01	19	AHU-14/17
SPEECH 23	155	5	1	5	0.06	12	1.0	12	200	0.06	1.01	12	AHU-14/17
BOYS 33	368	0	0	0	0.06	22	1.0	22	250	0.09	0.98	23	AHU-14/17
GIRLS 30	365	0	0	0	0.06	22	1.0	22	250	0.09	0.98	22	AHU-14/17
TOTAL	**2531**		**52**			**796**		**383**	**2500**		**0.78**	**1008**	

REGISTERED PROFESSIONAL ENGINEER
17884
JULY 25, 1995
SCOTT W. MILLER
EXPIRES: 31DEC20

Date: 10-16-2020 PERMIT SET
Proj No: 10064
Drawn By: JHB
Chkd By: SWM
DSGN By: SWM
Acad File:

SUNRISE ELEMENTARY SCHOOL
MECHANICAL EQUIPMENT REPLACEMENT
730 SE 19TH AVE
ALBANY OREGON 97322

MECHANICAL VENTILATION SCHEDULE

MFIA INC.
Consulting Engineers
2007 S.E. Ash St.
Portland, OR 97214
PHN: (503) 234-0548
FAX: (503) 234-0577
WWW.MFIA-INC.COM

SHEET
M6.3

Electrical Abbreviations & Symbol Legend

Abbreviations

A	AMPERE
AC	ALTERNATING CURRENT, AIR CONDITIONING UNIT
AHJ	AUTHORITY HAVING JURISDICTION
AIC	AVAILABLE INTERRUPTING CAPACITY
AF	AMPERE FRAME / AMPERE FUSED
AFC	ABOVE FINISHED CEILING
AFF	ABOVE FINISHED FLOOR
AFG	ABOVE FINISHED GRADE
ANSI	AMERICAN NATIONAL STANDARDS INSTITUTE
ARMS	ARC FLASH REDUCTION MAINTENANCE SYSTEM
AT	AMPERE TRIP
AV	AUDIO / VIDEO
AWG	AMERICAN WIRE GAUGE
BAS	BUILDING AUTOMATION SYSTEM
BFG	BELOW FINISHED GRADE
BLDG	BUILDING
C	CONDUIT
CAT	CATEGORY
CB	CIRCUIT BREAKER
CFCI	CONTRACTOR FURNISHED, CONTRACTOR INSTALLED
CFOI	CONTRACTOR FURNISHED, OWNER INSTALLED
CKT	CIRCUIT
CPT	CONTROL POWER TRANSFORMER
CR	CONTROL RELAY
CU	COPPER
dB	DECIBAL
DC	DIRECT CURRENT
DIM	DIMENSION
DIV	DIVISION
DTL	DETAIL
DWG	DRAWING
EL	ELEVATION
EMT	ELECTRICAL METALLIC TUBING
EOLR	END OF LINE RESISTOR
FACP	FIRE ALARM CONTROL PANEL
FF	FINISH FLOOR
FLA	FULL LOAD AMPERES
FT	FOOT, FEET
FBO	FURNISHED BY OTHERS
G, GND	GROUND
GFCI	GROUND FAULT CIRCUIT INTERRUPTER
HH	HAND HOLE
HP	HORSEPOWER
ID	IDENTIFICATION
IDC	INITIATING DEVICE CIRCUIT
IDF	INTERMEDIATE DISTRIBUTION FRAME
IEEE	INSTITUTE OF ELECTRICAL AND ELECTRONICS ENGINEERS
IG	ISOLATED GROUND
IT	INFORMATION TECHNOLOGY
JB	JUNCTION BOX
KAIC	THOUSAND AMPS INTERRUPTING CURRENT
KCMIL	THOUSAND CIRCULAR MILS
KVA	KILOVOLT-AMPERE
KW	KILOWATT
LAN	LOCAL AREA NETWORK
LED	LIGHT EMITTING DIODE
LS	LIMIT SWITCH
LSI	ELECTRONIC TRIP UNIT ADJUSTABLE LONG TIME DELAY, SHORT TIME DELAY, INSTANTANEOUS TRIP
LSIG	ELECTRONIC TRIP UNIT WITH ADJUSTABLE LONG TIME DELAY, SHORT TIME DELAY, INSTANTANEOUS TRIP, AND GROUND FAULT
LV	LOW VOLTAGE
MCA	MINIMUM CIRCUIT AMPACITY
MCC	MOTOR CONTROL CENTER
MCP	MOTOR CIRCUIT PROTECTOR
MDF	MAIN DISTRIBUTION FRAME
MHz	MEGAHERTZ
MISC	MISCELLANEOUS
MLO	MAIN LUGS ONLY
MOCP	MAXIMUM OVERCURRENT PROTECTION
N	NEUTRAL
NAC	NOTIFICATION APPLIANCE CIRCUIT
N/A	NOT APPLICABLE
NC	NORMALLY CLOSED
NEC	NATIONAL ELECTRICAL CODE
NEMA	NATIONAL ELECTRICAL MANUFACTURERS ASSOCIATION
NL	NIGHT LIGHT
NO	NORMALLY OPEN
NTS	NOT TO SCALE
OC	ON CENTER
OFCI	OWNER FURNISHED, CONTRACTOR INSTALLED
OFOI	OWNER FURNISHED, OWNER INSTALLED
Ø	PHASE
PB	PULL BOX, PANIC BUTTON, PUSH BUTTON
PE	PHOTO EYE
PNL	PANEL
POE	POWER OVER ETHERNET
PTZ	PAN, TILT, ZOOM
RF	RADIO FREQUENCY
RFI	REQUEST FOR INFORMATION
SPD	SURGE PROTECTION DEVICE
STD	STANDARD
SW	SWITCH
T/M	THERMAL MAGNETIC CIRCUIT BREAKER
TBD	TO BE DETERMINED
TV	TELEVISION / MONITOR OUTLET
TVSS	TRANSIENT VOLTAGE SURGE SUPPRESSOR
TYP	TYPICAL
UH	UNIT HEATER
UG	UNDERGROUND
UL	UNDERWRITERS LABORATORIES
UPS	UNINTERRUPTIBLE POWER SUPPLY
UON	UNLESS OTHERWISE NOTED
USB	UNIVERSAL SERIAL BUS
V	VOLTS, VOLTAGE
VA	VOLT-AMPERE
VFD	VARIABLE FREQUENCY DRIVE
W	WATT, WIRE
WAN	WIDE AREA NETWORK
WAP	WIRELESS ACCESS POINT
WI-FI	WIRELESS FIDELITY
W/	WITH
W/O	WITHOUT
XFMR	TRANSFORMER
Y	WYE
1P	ONE POLE
2P	TWO POLE
3P	THREE POLE
4P	FOUR POLE

General Electrical Notes

1. ALL LIGHTING BRANCH CIRCUITS SHALL BE 2#10, 1#10G IN 3/4" CONDUIT, UON.
2. ALL 20-AMP RECEPTACLE AND HARDWIRED BRANCH CIRCUITS SHALL BE 2#12, 1#12G IN 3/4" CONDUIT, UON.
3. ALL EXIT SIGNS SHALL BE WIRED TO THE LOCAL LIGHTING BRANCH CIRCUIT AHEAD OF ALL SWITCHING, UON.
4. PROVIDE 0-10V DIMMING CONDUCTORS TO ALL LUMINAIRES WHICH ARE CONTROLLED BY 0-10V DIMMERS SHOWN ON THE DRAWINGS.

Drawing Symbol Variables

3	THREE WAY SWITCH.
4	FOUR WAY SWITCH.
#J	QUANTITY OF JACKS AND HORIZONTAL CABLES. J = CAT6, JA = CAT6A, JE = CAT5E
+XX	MOUNTING UNITS EXPRESSED IN INCHES TO CENTERLINE ABOVE FINISHED FLOOR OR GRADE.
C	MOUNTED HORIZONTALLY AT 4" ABOVE COUNTERTOP.
CL	CLOCK.
DR	DUAL RELAY.
E	RED EMERGENCY SWITCH.
EL	ELEVATOR RECALL.
ETR	EXISTING DEVICE SHALL REMAIN.
G	GLASS BREAK SENSOR.
K	KEYED SWITCH.
LF	LOW FREQUENCY.
LV	LOW VOLTAGE SWITCH.
M	MOTOR RATED TOGGLE SWITCH.
NEX	REPLACE EXISTING WIRING DEVICE AND FACEPLATE WITH NEW. BACK BOX AND CONDUIT SHALL REMAIN.
O	INTEGRAL OCCUPANCY SENSOR.
P	ADA PHONE, VERIFY HEIGHT WITH ARCHITECT / OWNER.
REX	REMOVE EXISTING DEVICE / EQUIPMENT.
TK	MOUNTED IN TOE KICK OF CASEWORK.
TV	MOUNTED ADJACENT TO TV AT 60" AFF, UON.
V	VANDAL RESISTANT.
WG	WIREGUARD.
WP	WEATHERPROOF.

Annotation

(N)	INDICATES NEW EQUIPMENT.
(E)	INDICATES EXISTING EQUIPMENT TO REMAIN.
(D)	INDICATES EXISTING EQUIPMENT TO BE DEMOLISHED.
(RR)/(RD)	INDICATES EXISTING EQUIPMENT OR DEVICE TO BE REMOVED AND REINSTALLED.
PXXX	CONDUIT & CONDUCTOR CALLOUT. REFER TO CONDUIT & CONDUCTOR SCHEDULE.
XX	KEYED NOTE CALLOUT. REFER TO CORRESPONDING SHEET KEYNOTES.
XX	KEYED NOTE CALLOUT. REFER TO CORRESPONDING SHEET KEYNOTES.
XX	KEYED NOTE CALLOUT. REFER TO CORRESPONDING SHEET KEYNOTES.
XX-XX	MECHANICAL EQUIPMENT CALLOUT. REFER TO MECHANICAL EQUIPMENT CONNECTION SCHEDULE.
X EX.XX	DETAIL CALLOUT. REFER TO DETAIL AND SHEET AS INDICATED ON CALLOUT.
XX'-XX"	FIXTURE MOUNTING CALLOUT. HEIGHT ABOVE FINISHED FLOOR (A.F.F.)
XXXXX	EQUIPMENT CALLOUT. REFER TO NEMA CONNECTION SCHEDULE.
X EX.XX	SECTION CALLOUT. REFER TO DETAIL AND SHEET AS INDICATED ON CALLOUT.
EX.XX	ELEVATION CALLOUT. REFER TO DETAIL AND SHEET AS INDICATED ON CALLOUT.

Power Distribution

- DUPLEX RECEPTACLE, MOUNTED AT 18" AFF, UON.
- SIMPLEX RECEPTACLE, MOUNTED AT 18" AFF, UON.
- QUADPLEX RECEPTACLE, MOUNTED AT 18" AFF, UON.
- GFCI DUPLEX RECEPTACLE, MOUNTED AT 18" AFF, UON.
- GFCI QUADPLEX RECEPTACLE, MOUNTED AT 18" AFF, UON.
- TAMPERPROOF DUPLEX RECEPTACLE, MOUNTED AT 18" AFF, UON.
- TAMPERPROOF QUADPLEX RECEPTACLE, MOUNTED AT 18" AFF, UON.
- NEMA SPECIAL RECEPTACLE, MOUNTED AT 18" AFF, UON. NEMA CONFIGURATION AS INDICATED.
- SIDE HATCHED RECEPTACLE, TO BE WIRED TO SWITCHED CIRCUIT.
- CENTER HATCHED RECEPTACLE TO BE WIRED TO EMERGENCY CIRCUIT.
- RECEPTACLE MOUNTED ON CEILING.
- RECEPTACLE MOUNTED IN-COUNTER.
- DISCONNECT SWITCH.
- FUSED DISCONNECT SWITCH.
- ENCLOSED CIRCUIT BREAKER.
- COMBINATION STARTER.
- FLOORBOX COMBINATION POWER & DATA.
- FLOORBOX POWER.
- POKETHRU COMBINATION POWER & DATA.
- POKETHRU POWER.
- POWER POLE.
- PANELBOARD SURFACE MOUNT.
- PANELBOARD FLUSH MOUNT.
- MAIN DISTRIBUTION PANEL.
- UTILITY CT METER.

Lighting

- TROFFER LUMINAIRE, SURFACE, RECESS, OR PENDANT MOUNTED AS INDICATED ON THE DRAWINGS.
- DOWNLIGHT LUMINAIRE, SURFACE, RECESS, OR PENDANT MOUNTED AS INDICATED ON THE DRAWINGS.
- UNDERCABINET LUMINAIRE.
- EMERGENCY BATTERY PACK LUMINAIRE, WALL OR CEILING MOUNTED.
- LINEAR PENDANT MOUNTED LUMINAIRE.
- LINEAR WALL MOUNTED LUMINAIRE.
- BOLLARD LUMINAIRE.
- SITE LUMINAIRE POLE MOUNTED. NUMBER OF HEADS AS SHOWN.
- TRACK LUMINAIRE.
- SPOT LUMINAIRE.
- WALL MOUNTED LUMINAIRE.
- RING PENDANT LUMINAIRE.
- WALL WASH LUMINAIRE POINTED IN DIRECTION AS SHOWN.
- EXIT SIGN, WALL OR CEILING MOUNTED, SINGLE FACE WITH DIRECTIONAL CHEVRONS AS INDICATED ON DRAWINGS.
- EXIT SIGN, WALL OR CEILING MOUNTED, DOUBLE FACE WITH DIRECTIONAL CHEVRONS AS INDICATED ON DRAWINGS.
- HALF HATCHED LUMINAIRE TO BE WIRED TO EMERGENCY CIRCUIT
- FULL HATCHED LUMINAIRE TO BE WIRED TO NIGHTLIGHT CIRCUIT.

Switches

- SINGLE POLE SWITCH - MOUNTED AT 42" AFF, UON.
- LOW VOLTAGE 0-10 VOLT DIMMING SWITCH - MOUNTED AT 42" AFF, UON.
- OCCUPANCY SENSOR - CEILING OR WALL MOUNTED.
- OCCUPANCY SENSOR POWER PACK.
- PHOTOCELL - CEILING OR WALL MOUNTED.
- ADA DOOR PUSHPLATE.
- EMERGENCY STOP SWITCH, MUSHROOM HEAD.
- PUSHBUTTON, SINGLE OR DOUBLE.

Low Voltage

- ETHERNET OUTLET MOUNTED AT 18" AFF, UON.
- COAXIAL OUTLET MOUNTED AT 18" AFF, UON.
- PHONE OUTLET MOUNTED AT 18" AFF, UON.
- LOW VOLTAGE OUTLET CEILING MOUNTED.
- WIRELESS ACCESS POINT CEILING MOUNTED.
- WIRELESS ACCESS POINT WALL MOUNTED.
- DIGITAL CLOCK.
- FLOORBOX DATA.
- POKETHRU DATA.

Audio/Visual

- AV OUTLET - WALL MOUNTED AT 18" AFF, UON. SEE AUDIO VISUAL DETAILS FOR CONFIGURATIONS.
- AUDIO VIDEO OUTLET - CEILING MOUNTED.
- AUDIO SPEAKER - WALL MOUNTED AT 96" AFF, UON.
- AUDIO SPEAKER - CEILING MOUNTED.
- PAGING SPEAKER - WALL MOUNTED AT 96" AFF, UON.
- PAGING SPEAKER - CEILING MOUNTED.
- PAGING HORN - WALL MOUNTED AT 96" AFF, UON.
- INTERCOM SPEAKER - WALL MOUNTED AT 96" AFF, UON.
- INTERCOM SPEAKER - CEILING MOUNTED.
- INTERCOM CALL BUTTON - MOUNTED AT 42", UON.
- AI — ADMINISTRATION CONSOLE. PROVIDE ONE (1) CAT6 CABLE.
- AV PROJECTOR - CEILING MOUNTED.

Access Control & Security

- ACCESS CONTROL - DOOR CONTACT. PROVIDE 3/4" CONDUIT FROM DOOR FRAME TO ACCESSIBLE CEILING OR SECURITY JUNCTION BOX AS SHOWN ON THE DRAWINGS.
- ACCESS CONTROL - CARD READER. PROVIDE 3/4" CONDUIT FROM DOOR FRAME TO ACCESSIBLE CEILING OR SECURITY JUNCTION BOX AS SHOWN ON THE DRAWINGS.
- ACCESS CONTROL - ELECTRIC STRIKE. PROVIDE 3/4" CONDUIT FROM DOOR FRAME TO ACCESSIBLE CEILING OR SECURITY JUNCTION BOX AS SHOWN ON THE DRAWINGS.
- K — ACCESS CONTROL - KEY PAD. PROVIDE 3/4" CONDUIT FROM DOOR FRAME TO ACCESSIBLE CEILING OR SECURITY JUNCTION BOX AS SHOWN ON THE DRAWINGS.
- ACCESS CONTROL - MAGNETIC LOCK. PROVIDE 3/4" CONDUIT FROM DOOR FRAME TO ACCESSIBLE CEILING OR SECURITY JUNCTION BOX AS SHOWN ON THE DRAWINGS.
- RX — ACCESS CONTROL - REQUEST TO EXIT. PROVIDE 3/4" CONDUIT FROM DOOR FRAME TO ACCESSIBLE CEILING OR SECURITY JUNCTION BOX AS SHOWN ON THE DRAWINGS.
- PB — ACCESS CONTROL - ELECTRIFIED PANIC BAR. PROVIDE 3/4" CONDUIT FROM DOOR FRAME TO ACCESSIBLE CEILING OR SECURITY JUNCTION BOX AS SHOWN ON THE DRAWINGS.
- S — ACCESS CONTROL - SECURITY JUNCTION BOX. SIZED AS RECOMMENDED BY SECURITY SYSTEM MANUFACTURER.
- CI — ACCESS CONTROL - CAMERA / INTERCOM.
- ACCESS CONTROL - PANIC BUTTON.
- SECURITY CAMERA - CEILING MOUNTED. PROVIDE ONE (1) CAT6.
- SECURITY CAMERA - WALL MOUNTED. PROVIDE ONE (1) CAT6.
- IS — INTRUSION SENSOR - CEILING MOUNTED.
- IS — INTRUSION SENSOR - WALL MOUNTED.
- IK — INTRUSION KEYPAD.

Fire Alarm

- 15 — FIRE ALARM AUDIO/VISUAL - WALL MOUNTED. CANDELA RATING AS SHOWN ON DRAWING.
- 15 — FIRE ALARM VISUAL - WALL MOUNTED. CANDELA RATING AS SHOWN ON DRAWING.
- 15 — FIRE ALARM AUDIO/VISUAL - CEILING MOUNTED. CANDELA RATING AS SHOWN ON DRAWING.
- 15 — FIRE ALARM VISUAL - CEILING MOUNTED. CANDELA RATING AS SHOWN ON DRAWING.
- FB — FIRE ALARM BELL.
- S — FIRE ALARM SMOKE DETECTOR - CEILING MOUNTED.
- S — FIRE ALARM SMOKE DETECTOR - WALL MOUNTED.
- H — FIRE ALARM HEAT DETECTOR - CEILING MOUNTED.
- H — FIRE ALARM HEAT DETECTOR - WALL MOUNTED.
- D — FIRE ALARM DUCT SMOKE DETECTOR.
- TS D — FIRE ALARM DUCT SMOKE DETECTOR WITH REMOTE TEST STATION.
- F — FIRE ALARM MANUAL PULL STATION - WALL MOUNTED.
- TS — FIRE ALARM MANUAL TAMPER SWITCH.
- FS — FIRE ALARM MANUAL FLOW SWITCH.
- PS — FIRE ALARM MANUAL PRESSURE SWITCH.
- MM — FIRE ALARM MONITOR MODULE.
- RI — FIRE ALARM RELAY INPUT.
- RO — FIRE ALARM RELAY OUTPUT.
- PIV — FIRE ALARM POST INDICATOR VALVE.
- SA — FIRE ALARM SURGE ARRESTOR.
- IM — FIRE ALARM ISOLATION MODULE.
- FAA — FIRE ALARM ANNUNCIATOR.
- FIRE ALARM MAGNETIC DOOR HOLD.

Area Rescue Assistance

- ARA — COMMAND UNIT.
- AR — SPEAKER STROBE.
- ARS — AREA OF RESCUE STATION.

Raceways

- CONDUIT AND/OR CONDUCTORS INSTALLED ABOVE GRADE, CONCEALED IN WALL OR CEILING SPACE.
- CONDUIT AND/OR CONDUCTORS INSTALLED BELOW GRADE, BELOW SLAB.
- CONDUIT TURNED DOWN.
- CONDUIT TURNED UP.
- CONDUIT STUBBED AND CAPPED.
- CONDUIT DIRECT CONNECTION TO EQUIPMENT.
- FLEXIBLE CONNECTION TO EQUIPMENT.
- CONDUIT / WIRING CONTINUATION.
- HOMERUN TO PANELBOARD.
- CABLE TRAY. SIZE AND TYPE AS INDICATED ON DRAWINGS.

One-Line Diagram

- CIRCUIT BREAKER.
- DRAWOUT CIRCUIT BREAKER.
- ENCLOSED CIRCUIT BREAKER.
- MOTOR STARTER CONTACT.
- DISCONNECT SWITCH.
- ENCLOSED DISCONNECT SWITCH.
- FUSED DISCONNECT SWITCH.
- ENCLOSED FUSED DISCONNECT SWITCH.
- CURRENT TRANSFORMER METER.
- FUSE, RATING AS SHOWN ON DRAWINGS.
- GENERATOR, CONFIGURATION AS INDICATED ON DRAWING.
- GROUND ROD.
- EQUIPMENT GROUND.
- MOTOR, RATED AS INDICATED ON DRAWINGS.
- NEMA CONNECTION.
- PANEL.
- MINI POWER CENTER.
- ST — SHUNT TRIP
- HTR — HEATER.
- RA — REMOTE ANNUNCIATOR.
- BATT — BATTERY CHARGER.
- SURGE SUPPRESSION DEVICE
- DIGITAL METER
- VFD — VARIABLE FREQUENCY DRIVE
- SS — SOFT STARTER
- TRANSFER SWITCH, WITH FUSES OR BREAKERS AS SHOWN ON DRAWINGS.
- TRANSFORMER

Miscellaneous

- J J — JUNCTION BOX (ROUND, SQUARE).
- T — THERMOSTAT.
- R — RELAY.
- CORD REEL.
- MOTOR / EXHAUST FAN.
- CEILING FAN.
- UTILITY POLE.
- WEATHERHEAD.
- GROUND ROD.
- GROUND ROD WITH TEST WELL.
- SURFACE RACEWAY / WIREMOLD.
- FIRE RATED BACKBOARD.

Landis Consulting
ENGINEERING SERVICES
Salem | Lake Oswego
503-584-1576
www.landisconsulting.com

REGISTERED PROFESSIONAL ENGINEER
86683
Digital Signature
OREGON
MAY 08, 2012
BENJAMIN E. FOSBRY
EXPIRES: 12-31-2020

Date:	10-21-2020 BID SET
Proj No:	10064
Drawn By:	SR
Chkd By:	BEP
DSGN By:	BEP
Acad Files:	

SUNRISE ELEMENTARY SCHOOL
MECHANICAL EQUIPMENT REPLACEMENT - PHASE I
730 SE 19TH AVE
ALBANY OREGON 97322

ELECTRICAL ABBRIVIATIONS 7 SYMBOL LEGEND

MFIA INC.
Consulting Engineers
2007 S.E. Ash St.
Portland, OR 97214
PHN: (503) 234-0548
FAX: (503) 234-0677
WWW.MFIA-ENG.COM

SHEET
E0.1
OF

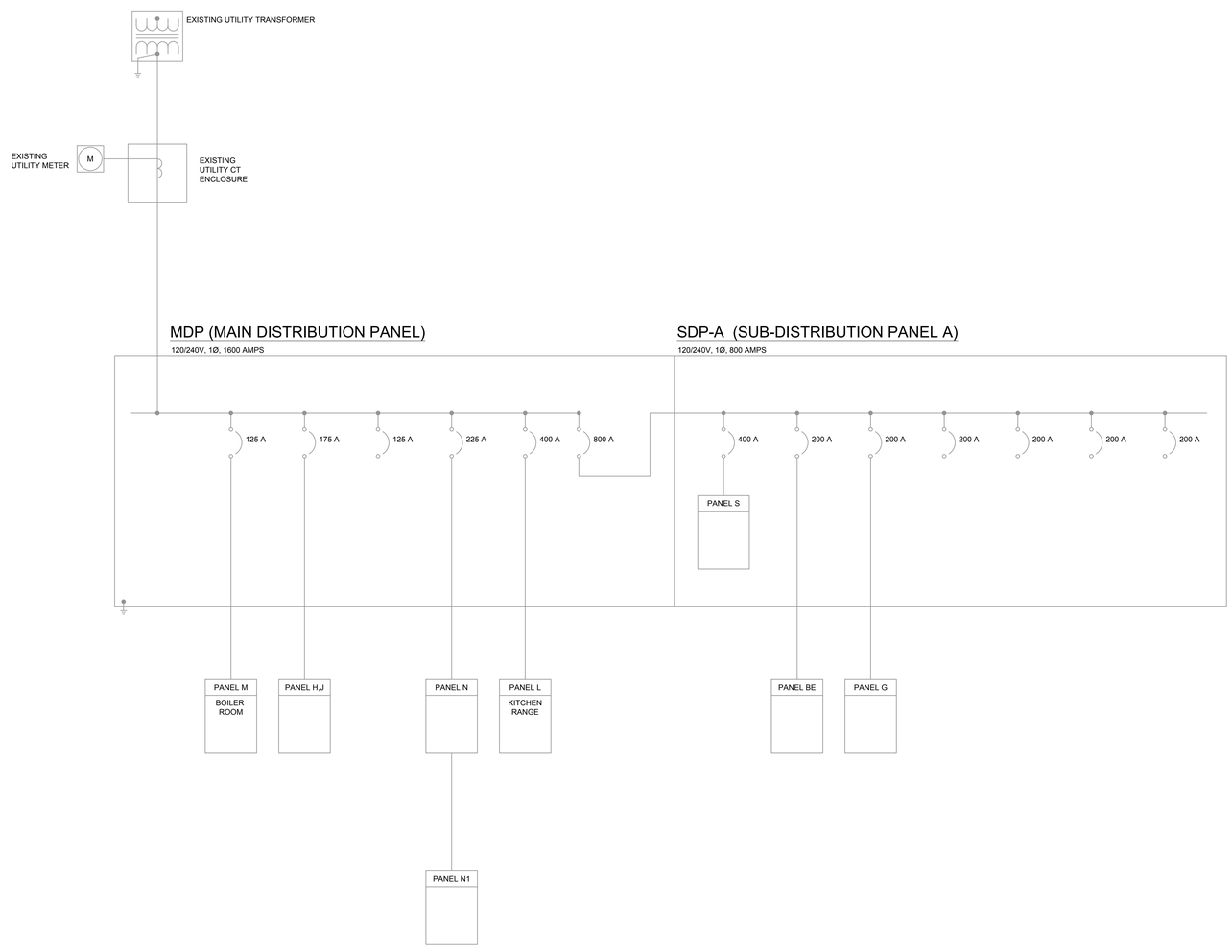

Landis Consulting
ENGINEERING SERVICES
Salem | Lake Oswego
503-584-1576
www.landisconsulting.com

REGISTERED PROFESSIONAL ENGINEER
86683
Digital Signature
OREGON
MAY 08, 2012
BENJAMIN E. FERRY
EXPIRES: 12-31-2020

Date:	10-21-2020 BID SET
Proj No:	10054
Drawn By:	SR
Chkd By:	BEP
DSGN By:	BEP
Acad File:	

SUNRISE ELEMENTARY SCHOOL
MECHANICAL EQUIPMENT REPLACEMENT - PHASE I
730 SE 19TH AVE
ALBANY OREGON 97322

EXISTING ONE LINE DIAGRAM

MFIA INC.

Consulting Engineers
2007 S.E. Ash St.
Portland, OR 97214
PHN: (503) 234-0548
FAX: (503) 234-0677
WWW.MFIA-ENG.COM

SHEET
E0.2
OF

MECHANICAL EQUIPMENT CONNECTION SCHEDULE

EQUIPMENT	TAG	SHEET REF	ELECTRICAL								CONDUIT		CONDUCTORS			PANEL	CIRCUIT	LOCAL DISCONNECT	DISCONNECT RATING	NOTES
			VOLTAGE	PHASE	MCA	MOCP	HP	WATTS	FLA	FLA @ 125%	QTY	SIZE	UNGROUNDED	GROUNDED	GROUNDING					
AIR HANDLING UNIT - RETURN	AHU-1/2-R	E4.3	240	1	-	-	-	-	5.8	7.25	1	0.75 INCH	2 - #12	-	1 - #12	G	36,38	No	-	2
AIR HANDLING UNIT - SUPPLY	AHU-1/2-S	E4.3	240	1	-	-	-	-	5.8	7.25	1	0.75 INCH	2 - #12	-	1 - #12	G	40,42	No	-	2
AIR HANDLING UNIT - RETURN	AHU-7/8-R	E4.3	240	1	-	-	-	-	5.8	7.25	1	0.75 INCH	2 - #12	-	1 - #12	CC	36,38	No	-	2
AIR HANDLING UNIT - SUPPLY	AHU-7/8-S	E4.3	240	1	-	-	-	-	5.8	7.25	1	0.75 INCH	2 - #12	-	1 - #12	CC	40,42	No	-	2
AIR HANDLING UNIT - RETURN	AHU-9/10-R	E4.2	240	1	-	-	-	-	5.8	7.25	1	0.75 INCH	2 - #12	-	1 - #12	K	13	No	-	2
AIR HANDLING UNIT - SUPPLY	AHU-9/10-S	E4.2	240	1	-	-	-	-	5.8	7.25	1	0.75 INCH	2 - #12	-	1 - #12	K	32	No	-	2
AIR HANDLING UNIT - RETURN	AHU-OFFICE/13-R	E4.1	240	1	-	-	-	-	5.8	7.25	1	0.75 INCH	2 - #12	-	1 - #12	H	8,6	No	-	2
AIR HANDLING UNIT - SUPPLY	AHU-OFFICE/13-S	E4.1	240	1	-	-	-	-	5.8	7.25	1	0.75 INCH	2 - #12	-	1 - #12	H	4,2	No	-	2
AIR HANDLING UNIT - RETURN	AHU-14/17-R	E4.1	240	1	-	-	-	-	5.8	7.25	1	0.75 INCH	2 - #12	-	1 - #12	BB	35,37	No	-	2
AIR HANDLING UNIT - SUPPLY	AHU-14/17-S	E4.1	240	1	-	-	-	-	5.8	7.25	1	0.75 INCH	2 - #12	-	1 - #12	BB	39,41	No	-	2
AIR HANDLING UNIT - RETURN	AHU-15/16-R	E4.1	240	1	-	-	-	-	5.8	7.25	1	0.75 INCH	2 - #12	-	1 - #12	N1	12,14	No	-	2
AIR HANDLING UNIT - SUPPLY	AHU-15/16-S	E4.1	240	1	-	-	-	-	5.8	7.25	1	0.75 INCH	2 - #12	-	1 - #12	N1	16,18	No	-	2
AIR HANDLING UNIT - RETURN	AHU-CAFE-R	E4.2	240	1	19.2	20	-	-	-	-	1	0.75 INCH	2 - #12	-	1 - #12	K	14	No	-	-
AIR HANDLING UNIT - SUPPLY	AHU-CAFE-S	E4.2	240	1	19.2	20	-	-	-	-	1	0.75 INCH	2 - #12	-	1 - #12	K	15	No	-	-
AIR HANDLING UNIT - RETURN	AHU-ENTRY-R	E4.2	240	1	-	-	-	-	5.8	7.25	1	0.75 INCH	2 - #12	-	1 - #12	K	29	No	-	2
AIR HANDLING UNIT - SUPPLY	AHU-ENTRY-S	E4.2	240	1	-	-	-	-	5.8	7.25	1	0.75 INCH	2 - #12	-	1 - #12	K	30	No	-	2
AIR HANDLING UNIT - RETURN	AHU-GYM-R	E4.2	240	1	68.4	70	-	-	-	-	1	1.25 INCH	2 - #4	-	1 - #8	S	30,32	No	-	-
AIR HANDLING UNIT - SUPPLY	AHU-GYM-S	E4.2	240	1	68.4	70	-	-	-	-	1	1.25 INCH	2 - #4	-	1 - #8	S	34,36	No	-	-
AIR HANDLING UNIT - RETURN	AHU-LIBRARY-R	E4.2	240	1	-	-	-	-	5.8	7.25	1	0.75 INCH	2 - #12	-	1 - #12	M	21,23	No	-	2
AIR HANDLING UNIT - SUPPLY	AHU-LIBRARY-S	E4.2	240	1	-	-	-	-	5.8	7.25	1	0.75 INCH	2 - #12	-	1 - #12	M	25,27	No	-	2
AIR HANDLING UNIT - RETURN	AHU-RESOURCE/FOCUS-R	E4.2	240	1	-	-	-	-	5.8	7.25	1	0.75 INCH	2 - #12	-	1 - #12	BB	36,38	No	-	2
AIR HANDLING UNIT - SUPPLY	AHU-RESOURCE/FOCUS-S	E4.2	240	1	-	-	-	-	5.8	7.25	1	0.75 INCH	2 - #12	-	1 - #12	BB	40,42	No	-	2
BOILER	B-1	E2.1	120	1	-	-	-	200	-	-	1	0.75 INCH	1 - #12	1 - #12	1 - #12	S	28	Yes	30 AS	-
BOILER	B-2	E2.1	120	1	-	-	-	200	-	-	1	0.75 INCH	1 - #12	1 - #12	1 - #12	S	28	Yes	30 AS	-
BOILER	B-3	E2.1	120	1	-	-	-	200	-	-	1	0.75 INCH	1 - #12	1 - #12	1 - #12	S	28	Yes	30 AS	-
BOILER	B-4	E2.1	120	1	-	-	-	200	-	-	1	0.75 INCH	1 - #12	1 - #12	1 - #12	S	28	Yes	30 AS	1
EXHAUST FAN	EF-REU-1	E4.2	120	1	-	-	1/4	-	-	-	1	0.75 INCH	1 - #12	1 - #12	1 - #12	K	27	Yes	30 AS	-
EXHAUST FAN	EF-REU-2	E4.2	120	1	-	-	1	-	-	-	1	0.75 INCH	2 - #10	-	1 - #10	BB	22	Yes	30 AS	-
EXHAUST FAN	EF-HEALTH	E4.2	120	1	-	-	1/10	-	-	-	1	0.75 INCH	1 - #12	1 - #12	1 - #12	K	21	Yes	30 AS	-
PUMPS	BP-1	E2.2	240	1	-	-	2	-	-	-	1	0.75 INCH	2 - #12	1 - #12	1 - #12	S	10,12	No	-	-
PUMPS	BP-2	E2.2	240	1	-	-	2	-	-	-	1	0.75 INCH	2 - #12	1 - #12	1 - #12	S	14,18	No	-	-
PUMPS	CP-1	E2.2	240	1	-	-	1/2	-	-	-	1	0.50 INCH	2 - #12	-	1 - #12	S	11,13	No	-	3
PUMPS	CP-2	E2.2	240	1	-	-	1/2	-	-	-	1	0.50 INCH	2 - #12	-	1 - #12	S	15,17	No	-	3
PUMPS	CP-3	E2.2	240	1	-	-	1/2	-	-	-	1	0.50 INCH	2 - #12	-	1 - #12	S	19,21	No	-	3
PUMPS	RP-1	E2.2	120	1	-	-	1/10	-	-	-	1	0.75 INCH	1 - #12	1 - #12	1 - #12	S	28	No	-	-
ROOF TOP UNIT	RTU-5	E4.2	240	1	18	25	-	-	-	-	1	0.75 INCH	2 - #12	-	1 - #10	BR1	18,20	Yes	30 AS	-
WATER HEATER	WH-1	E2.2	120	1	-	-	-	200	-	-	1	0.75 INCH	1 - #12	1 - #12	1 - #12	S	20	No	-	-

NOTES:
[1] FUTURE EQUIPMENT. TERMINATE CONDUCTORS IN CONDULET/JUNCTION BOX AT FUTURE BOILER LOCATION. LABEL CONDUCTORS AND CONDULET/BOX AS FUTURE.
[2] PROVIDE 20-AMP TRAY CABLE (260519.C02) BETWEEN THE FACTORY SUPPLIED DISCONNECT AND THE FAN WITHIN THE HVAC UNIT. COORDINATE WITH APPROVED SUBMITTALS FOR WIRING REQUIREMENTS.
[3] UTILIZE EXISTING OVERHEAD 1/2" CONDUIT TO THE EXTENT PRACTICAL. INTERCEPT AND EXTEND THE EXISTING CONDUIT TO NEW BOILERS.

Landis Consulting
ENGINEERING SERVICES
Salem | Lake Oswego
503-584-1576
www.landisconsulting.com

REGISTERED PROFESSIONAL ENGINEER
86683
Digital Signature
OREGON
MAY 08, 2012
BENJAMIN E. FOSBRY
EXPIRES: 12-31-2020

Date: 10-21-2020 | BID SET
Proj No: 10064
Drawn By: SR
Chkd By: BEP
DSGN By: BEP
Acad File:

SUNRISE ELEMENTARY SCHOOL
MECHANICAL EQUIPMENT REPLACEMENT - PHASE I
730 SE 19TH AVE
ALBANY OREGON 97322
ELECTRICAL SCHEDULES

MFIA INC.
Consulting Engineers
2007 S.E. Ash St.
Portland, OR 97214
PHN: (503) 234-0548
FAX: (503) 234-0677
WWW.MFIA-ENG.COM

SHEET
E0.3
OF

SHEET KEY NOTES

1. REMOVE AND REINSTALL LUMINAIRES, FIRE ALARM DEVICES, AND AUDIO SPEAKERS TO ALLOW THE CEILING TO BE REMOVED AND REINSTALLED. REMOVE ALL CONDUIT AND WIRING REQUIRED. DISCONNECT AND PROTECT LOW VOLTAGE CABLING SO THAT THE CABLING CAN BE REINSTALLED.

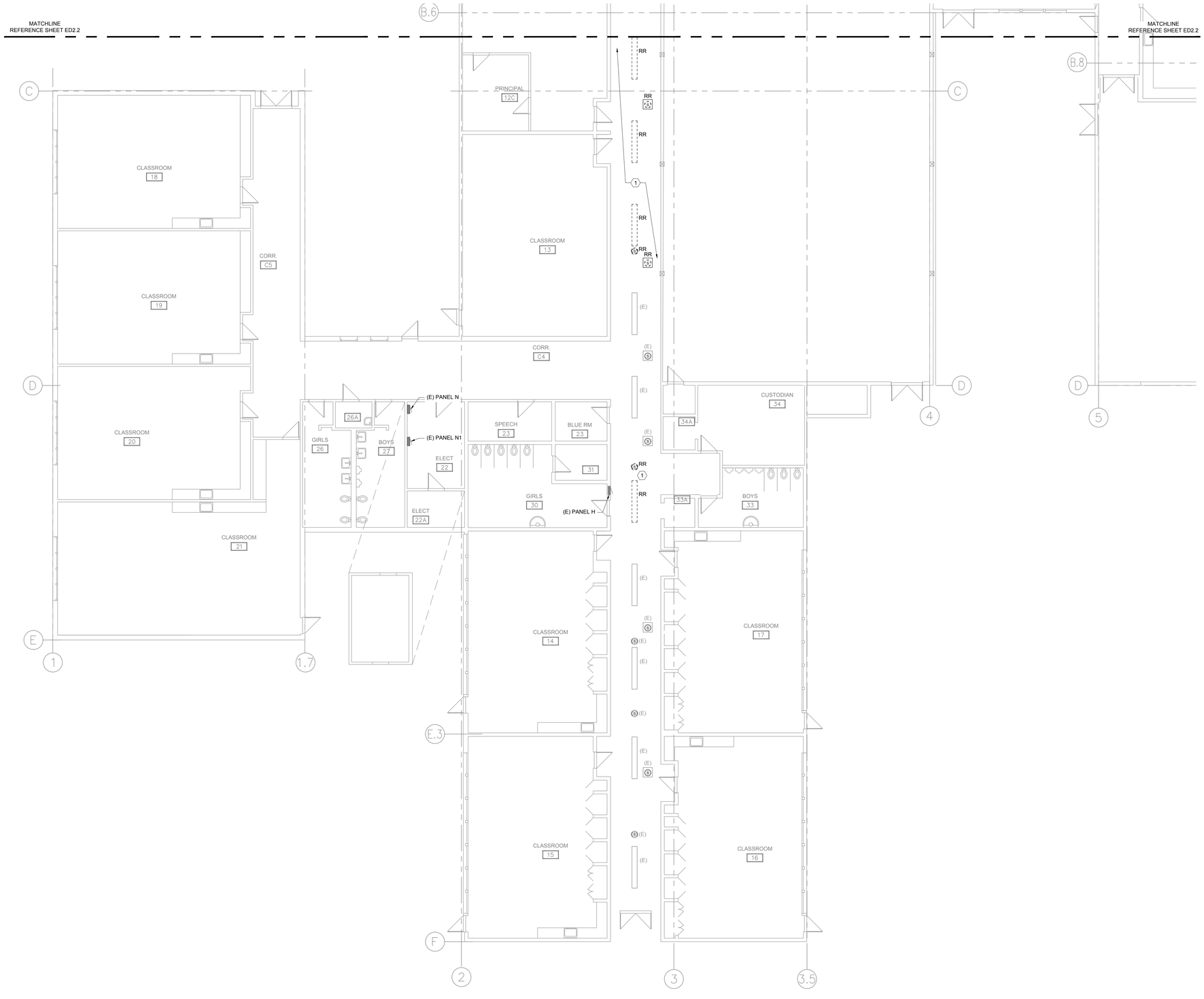

1 ELECTRICAL DEMOLITION FIRST FLOOR PLAN - A
SCALE: 1/8" = 1'-0"

Landis Consulting
ENGINEERING SERVICES
Salem | Lake Oswego
503-584-1576
www.landisconsulting.com

REGISTERED PROFESSIONAL ENGINEER
86683
Digital Signature
OREGON
MAY 08, 2012
BENJAMIN E. FERRY
EXPIRES: 12-31-2020

Date:	10-21-2020 BID SET
Proj No:	10064
Drawn By:	SR
Chkd By:	BEP
DSGN By:	BEP
Acad File:	

SUNRISE ELEMENTARY SCHOOL
MECHANICAL EQUIPMENT REPLACEMENT - PHASE I
730 SE 19TH AVE
ALBANY OREGON 97322

ELECTRICAL DEMOLITION FIRST FLOOR PLAN – A

MFIA INC.

Consulting Engineers
2007 S.E. Ash St.
Portland, OR 97214
PHN: (503) 234-0548
FAX: (503) 234-0677
WWW.MFIA-ENG.COM

SHEET
ED2.1
OF

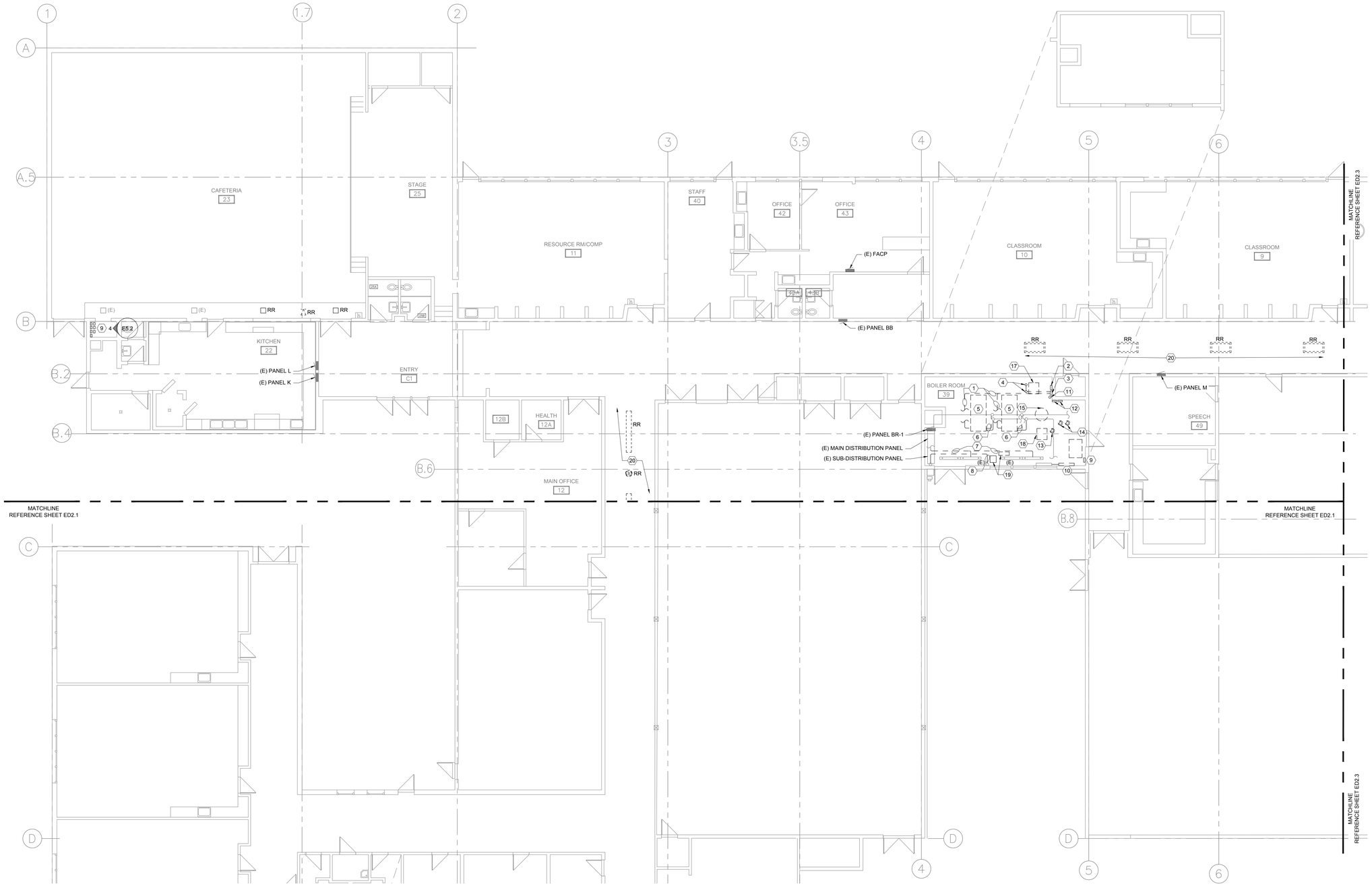

1 ELECTRICAL DEMOLITION FIRST FLOOR PLAN - B
SCALE: 1/8" = 1'-0"

SHEET KEY NOTES

1. CONTRACTOR SHALL REMOVE CONDUIT, WIRING, AND HARDWARE EQUIPMENT TO SOURCE.
2. DEMOLISH HAND FEED PUMP OFF AUTO SWITCH, ENCLOSURE, AND ALL ASSOCIATED CONDUIT AND WIRING.
3. DEMOLISH J-BOX.
4. DEMOLISH FEED PUMPS.
5. DEMOLISH BOILER & BLOWER.
6. DEMOLISH CONDUIT BACK TO SUSPENDED TEE CONDULET. EXISTING OVERHEAD 1/2" CONDUIT SHALL REMAIN AND BE REUSED.
7. CONTRACTOR SHALL REMOVE AND RE-INSTALL CONDUIT AND WIRE ASSOCIATED TO THE EXISTING LUMINAIRES AND ASSOCIATED CONDUIT AND WIRING SHALL BE REMOVED TO ALLOW DUCTWORK TO BE REMOVED. LUMINAIRES SHALL BE PROTECTED DURING DEMOLITION.
8. CONTRACTOR SHALL REMOVE AND RELOCATE BRANCH CIRCUIT CONDUIT AND WIRING TO WALL TO ALLOWS DUCT WORK TO BE REMOVED.
9. DEMOLISH MOTOR STARTER. REMOVE CONDUIT AND WIRING TO SOURCE.
10. DEMOLISH HVAC CONTROL BOX, CONDUIT AND WIRE AS DIRECTED BY MECHANICAL CONTRACTOR.
11. DEMOLISH DOMESTIC HOT WATER RE-CIRCULATION PUMP. CONSULT OWNER PRIOR TO DEMO OR SALVAGE. REMOVE CONDUIT AND WIRING TO SOURCE.
12. VFD SHALL BE REMOVED AND SALVAGE TO OWNER. REMOVE CONDUIT AND WIRING TO SOURCE.
13. CIRCULATION PUMP SHALL BE REMOVED AND SALVAGE TO OWNER. REMOVE CONDUIT AND WIRING TO SOURCE.
14. DEMOLISH CIRCULATION PUMP. REMOVE CONDUIT AND WIRING TO SOURCE.
15. DOMESTIC WATER HEATER SHALL BE SALVAGED. REMOVE CONDUIT AND WIRING TO SOURCE.
16. NOT USED.
17. DEMOLISH CONDENSATE RETURN PUMP. REMOVE CONDUIT AND WIRING TO SOURCE.
18. UNIT SHALL BE REMOVED AND REINSTALLED.
19. CONTROL COMPRESSOR AND AIR DRYER SHALL BE REMOVED. REMOVE CONDUIT AND WIRING TO SOURCE.
20. REMOVE AND REINSTALL LUMINAIRES, FIRE ALARM DEVICES, AND AUDIO SPEAKERS TO ALLOW THE CEILING TO BE REMOVED AND REINSTALLED. REMOVE ALL CONDUIT AND WIRING REQUIRED. DISCONNECT AND PROTECT LOW VOLTAGE CABLING SO THAT THE CABLING CAN BE REINSTALLED.

REGISTERED PROFESSIONAL ENGINEER
86683
Digital Signature
OREGON
MAY 08, 2012
BENJAMIN E. FOSBRE
EXPIRES: 12-31-2020

Date:	10-21-2020 BID SET
Proj No:	10064
Drawn By:	SR
Chkd By:	BEP
DSGN By:	BEP
Acad File:	

SUNRISE ELEMENTARY SCHOOL
MECHANICAL EQUIPMENT REPLACEMENT - PHASE I
730 SE 19TH AVE
ALBANY OREGON 97322

ELECTRICAL DEMOLITION FIRST FLOOR PLAN – B

MFIA INC.

Consulting Engineers
2007 S.E. Ash St.
Portland, OR 97214
PHN: (503) 234-0548
FAX: (503) 234-0677
WWW.MFIA-ENG.COM

SHEET
ED2.2
OF

Landis Consulting
ENGINEERING SERVICES
Salem | Lake Oswego
503-584-1576
www.landisconsulting.com

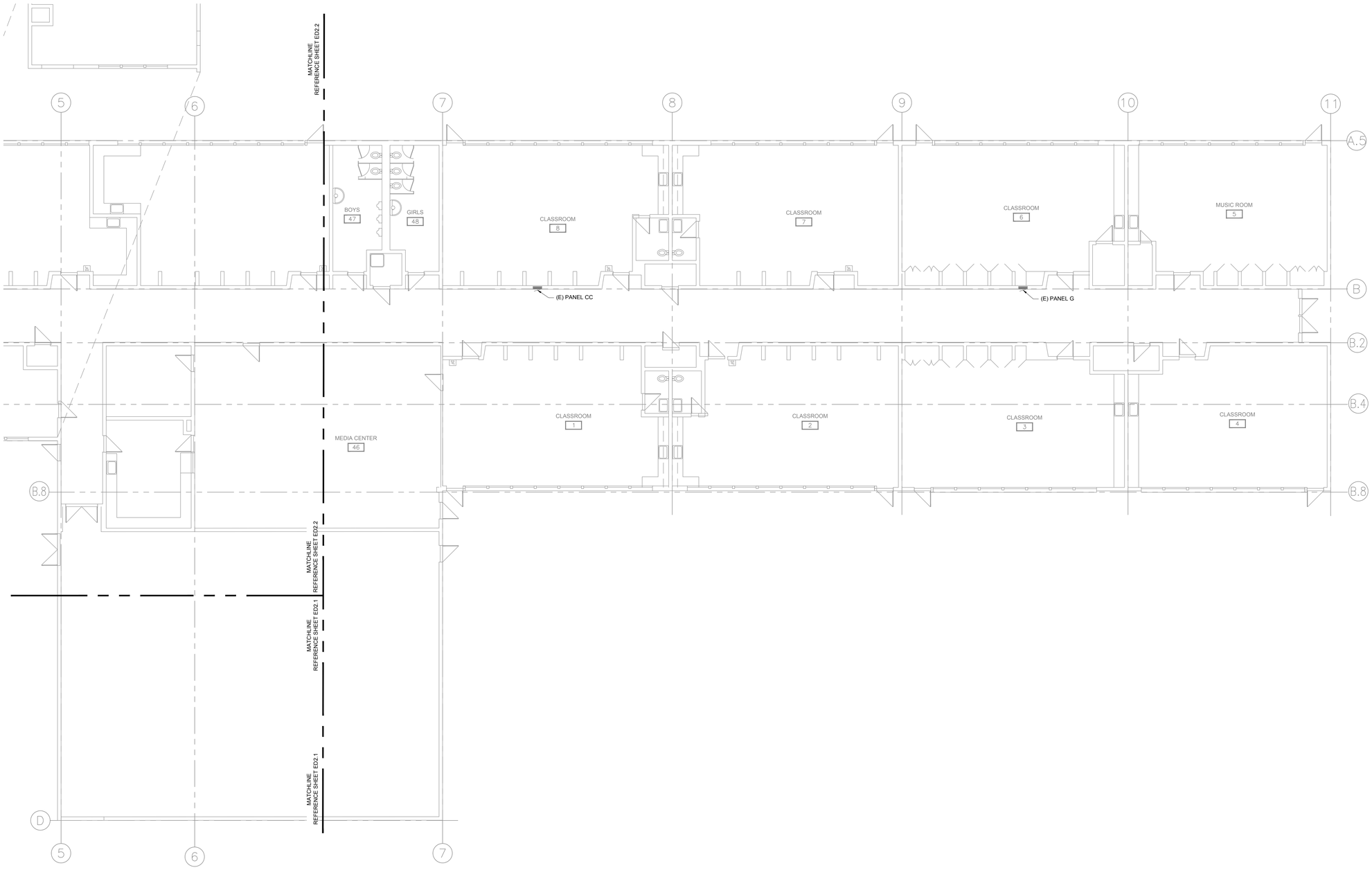

1 ELECTRICAL DEMOLITION FIRST FLOOR PLAN - C
SCALE: 1/8" = 1'-0"

Landis Consulting
ENGINEERING SERVICES
Salem | Lake Oswego
503-584-1576
www.landisconsulting.com

REGISTERED PROFESSIONAL ENGINEER
86683
Digital Signature
OREGON
MAY 08, 2012
BENJAMIN E. FOSBRY
EXPIRES: 12-31-2020

Date:	10-21-2020 BID SET
Proj No:	10054
Drawn By:	SR
Chkd By:	BEP
DSGN By:	BEP
Acad File:	

SUNRISE ELEMENTARY SCHOOL
MECHANICAL EQUIPMENT REPLACEMENT - PHASE I
730 SE 19TH AVE
ALBANY OREGON 97322

ELECTRICAL DEMOLITION FIRST FLOOR PLAN - C

MFIA INC.

Consulting Engineers
2007 S.E. Ash St.
Portland, OR 97214
PHN: (503) 234-0548
FAX: (503) 234-0677
WWW.MFIA-ENG.COM

SHEET
ED2.3
OF

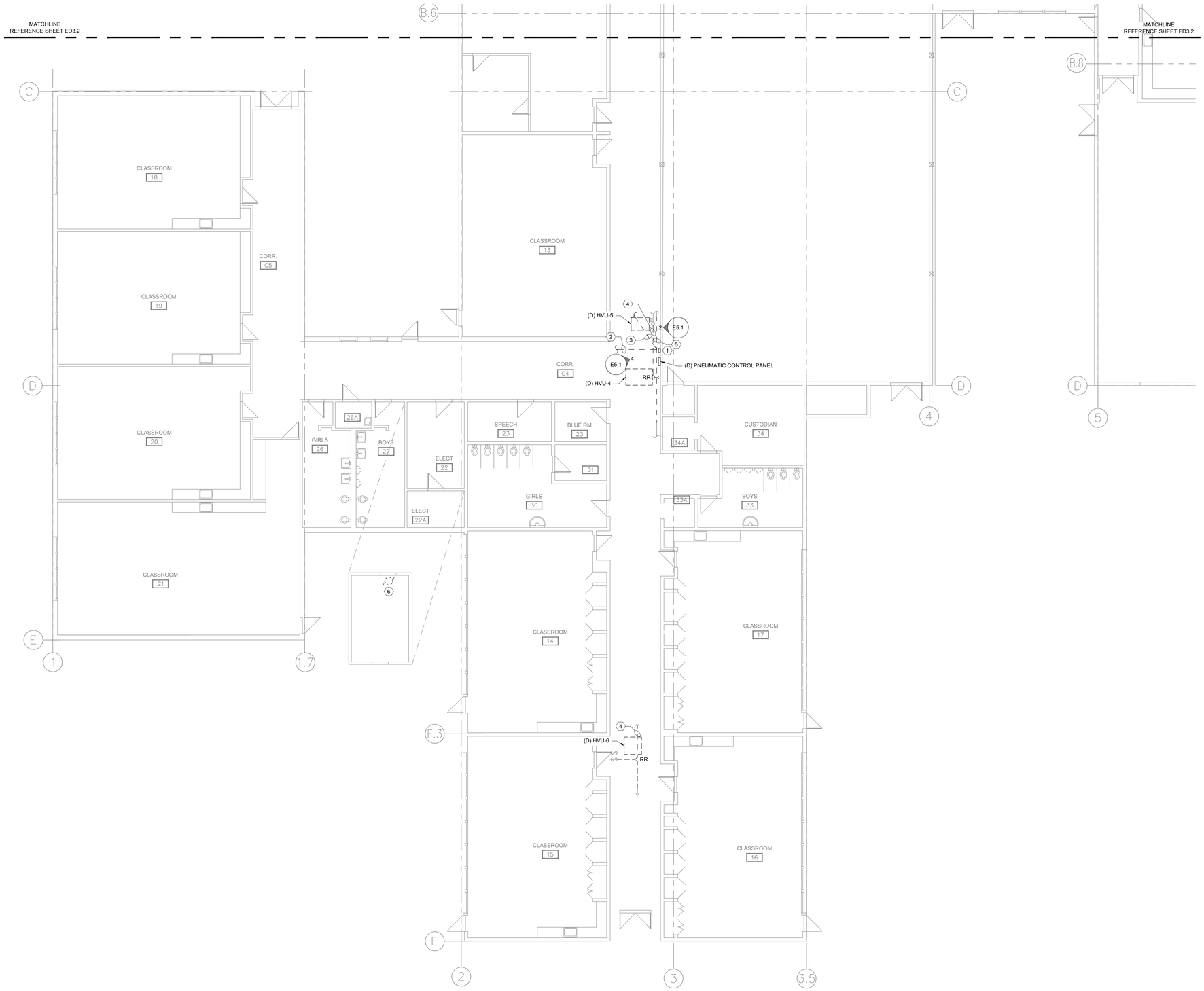

1 ELECTRICAL DEMOLITION ATTIC PLAN - A
SCALE: 1/8" = 1'-0"

SHEET KEY NOTES

1. DEMOLISH MOTOR STARTERS, DISCONNECT, AND BRANCH CIRCUIT CONDUIT AND WIRING TO SOURCE.
2. CONTRACTOR SHALL DISCONNECT APPROXIMATELY 70 DATA CABLES FROM THE IT RACK AND PULL BACK INTO THE ATTIC. CONTRACTOR SHALL LABEL ALL CABLES BEFORE DISCONNECTING. DISCONNECT CABLES TO THE EXTENT REQUIRED TO PROVIDE SUFFICIENT SLACK IN THE CABLES TO RELOCATE THEM. THE CABLES SHALL BE RELOCATED FOR THE NEW HATCH INSTALLATION.
3. CONTRACTOR SHALL RELOCATE APPROXIMATELY 5 DATA CABLES TO WALL.
4. CONTRACTOR SHALL REMOVE AND REINSTALL LUMINAIRE AND ASSOCIATED CONDUIT AND WIRE. LUMINAIRE SHALL BE REMOVED AND REINSTALLED TO ALLOW ROOF TO BE OPENED AND HVAC UNIT DEMOLISHED.
5. CONTRACTOR SHALL DISCONNECT APPROXIMATELY 100 DATA CABLES FROM THE IT RACK AND PULL BACK INTO THE ATTIC. CONTRACTOR SHALL LABEL ALL CABLES BEFORE DISCONNECTING. DISCONNECT CABLES TO THE EXTENT REQUIRED TO PROVIDE SUFFICIENT SLACK IN THE CABLES TO RELOCATE THEM. THE CABLES SHALL BE RELOCATED TO THE WALL FOR THE NEW HATCH INSTALLATION.
6. CONTRACTOR SHALL DEMOLISH CIRCULATION PUMP. PULL CONDUIT AND WIRE BACK TO SOURCE.

REGISTERED PROFESSIONAL ENGINEER
86683
Digital Signature
OREGON
MAY 08, 2012
BENJAMIN E. PERRY
EXPIRES: 12-31-2020

Date:	10-21-2020 BID SET
Proj No:	10064
Drawn By:	SR
Chkd By:	BEP
DSGN By:	BEP
Acad File:	

SUNRISE ELEMENTARY SCHOOL
MECHANICAL EQUIPMENT REPLACEMENT - PHASE I
730 SE 19TH AVE
ALBANY OREGON 97322

ELECTRICAL DEMOLITION ATTIC PLAN – A

MFIA INC.

Consulting Engineers
2007 S.E. Ash St.
Portland, OR 97214
PHN: (503) 234-0548
FAX: (503) 234-0677
WWW.MFIA-ENG.COM

SHEET
ED3.1
OF

Landis Consulting
ENGINEERING SERVICES
Salem | Lake Oswego
503-584-1576
www.landisconsulting.com

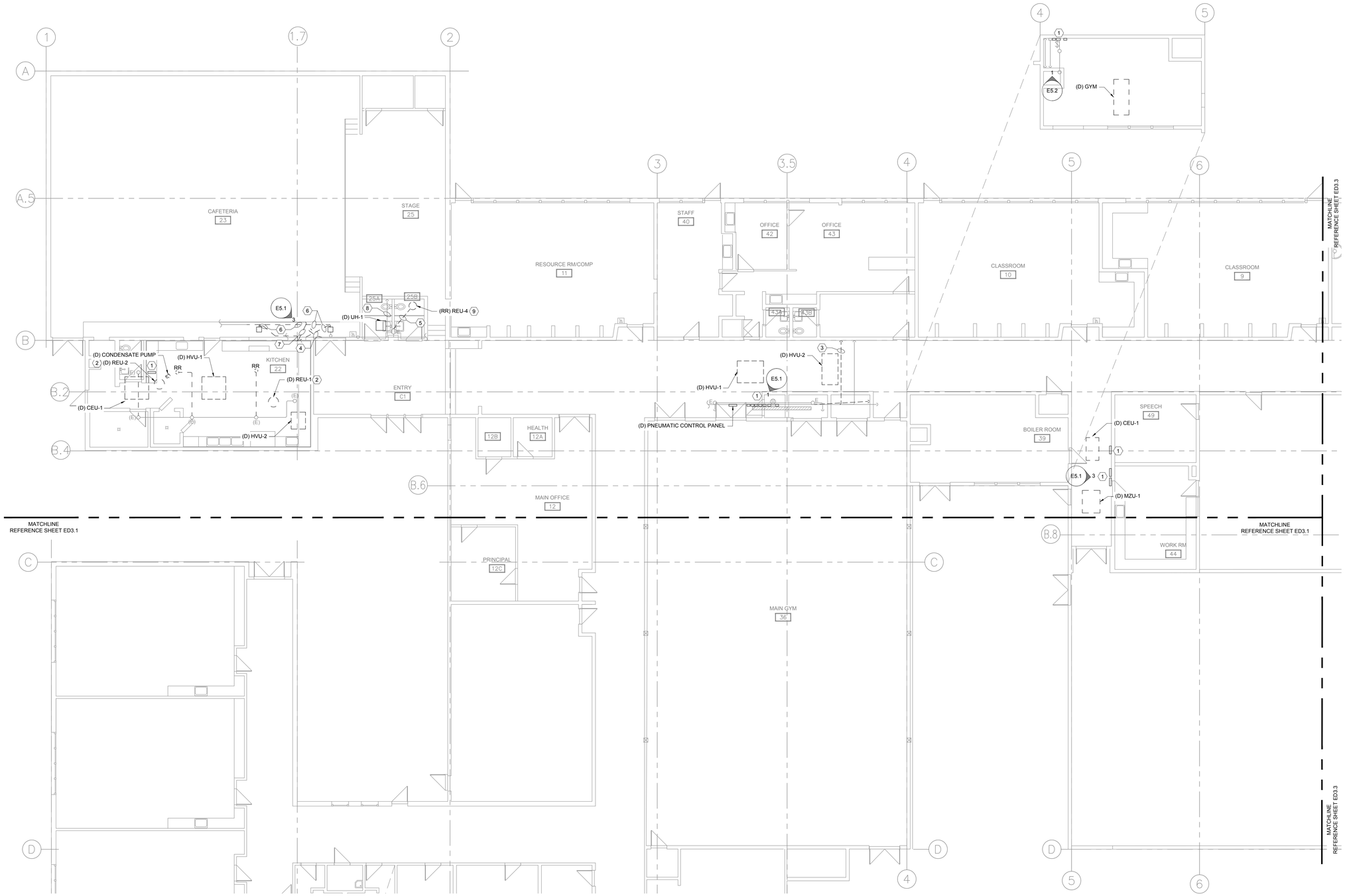

1 ELECTRICAL DEMOLITION ATTIC PLAN - B
SCALE: 1/8" = 1'-0"

SHEET KEY NOTES

1. DEMOLISH MOTOR STARTERS, DISCONNECT, AND BRANCH CIRCUIT CONDUIT AND WIRING TO SOURCE.
2. UNIT LOCATED ON ROOF.
3. CONTRACTOR SHALL DISCONNECT APPROXIMATELY 60 DATA CABLES FROM THE IT RACK AND PULL BACK INTO ATTIC. CONTRACTOR SHALL LABEL ALL CABLES BEFORE DISCONNECTING. DISCONNECT CABLES TO THE EXTENT REQUIRED TO PROVIDE SUFFICIENT SLACK IN THE CABLES TO RELOCATE THEM. THE CABLES SHALL BE RELOCATED FOR THE NEW HATCH INSTALLATION.
4. CONTRACTOR SHALL DISCONNECT 3 DATA CABLES DISCONNECT CABLES TO THE EXTENT REQUIRED TO PROVIDE SUFFICIENT SLACK IN THE CABLES TO RELOCATE THEM. THE CABLES SHALL BE RELOCATED TO AVOID DUCT WORK.
5. CONTRACTOR SHALL REMOVE AND RELOCATE 1/2" CONDUIT AND WIRE TO AVOID NEW HATCH INSTALLATION.
6. CONTRACTOR SHALL REMOVE AND RELOCATE CONDUIT AND WIRE ASSOCIATED TO THE EXISTING LUMINAIRES. LUMINAIRES SHALL BE REMOVED AND REINSTALLED TO ALLOW SOFFIT TO BE OPENED.
7. CONTRACTOR SHALL REMOVE AND RELOCATE 1/2" CONDUIT AND WIRE TO THE EXTENT REQUIRED TO ALLOW THE SOFFIT TO BE OPENED.
8. CONTRACTOR SHALL PROTECT THE 5 DATA CABLES DURING DEMOLITION.
9. UNIT LOCATED ON ROOF SHALL BE RELOCATED. CONDUIT SHALL BE INTERCEPTED AND EXTENDED TO NEW FAN LOCATION.

REGISTERED PROFESSIONAL ENGINEER
86683
Digital Signature
OREGON
MAY 08, 2012
BENJAMIN E. FOSBRY
EXPIRES: 12-31-2020

Date:	10-21-2020 BID SET
Proj No:	10064
Drawn By:	SR
Chkd By:	BEP
DSGN By:	BEP
Acad File:	

SUNRISE ELEMENTARY SCHOOL
MECHANICAL EQUIPMENT REPLACEMENT - PHASE I
730 SE 19TH AVE
ALBANY OREGON 97322

ELECTRICAL DEMOLITION ATTIC PLAN – B

MFA INC.
Consulting Engineers
2007 S.E. Ash St.
Portland, OR 97214
PHN: (503) 234-0548
FAX: (503) 234-0677
WWW.MFA-ENG.COM

Landis Consulting
ENGINEERING SERVICES
Salem | Lake Oswego
503-584-1576
www.landisconsulting.com

SHEET
ED3.2
OF

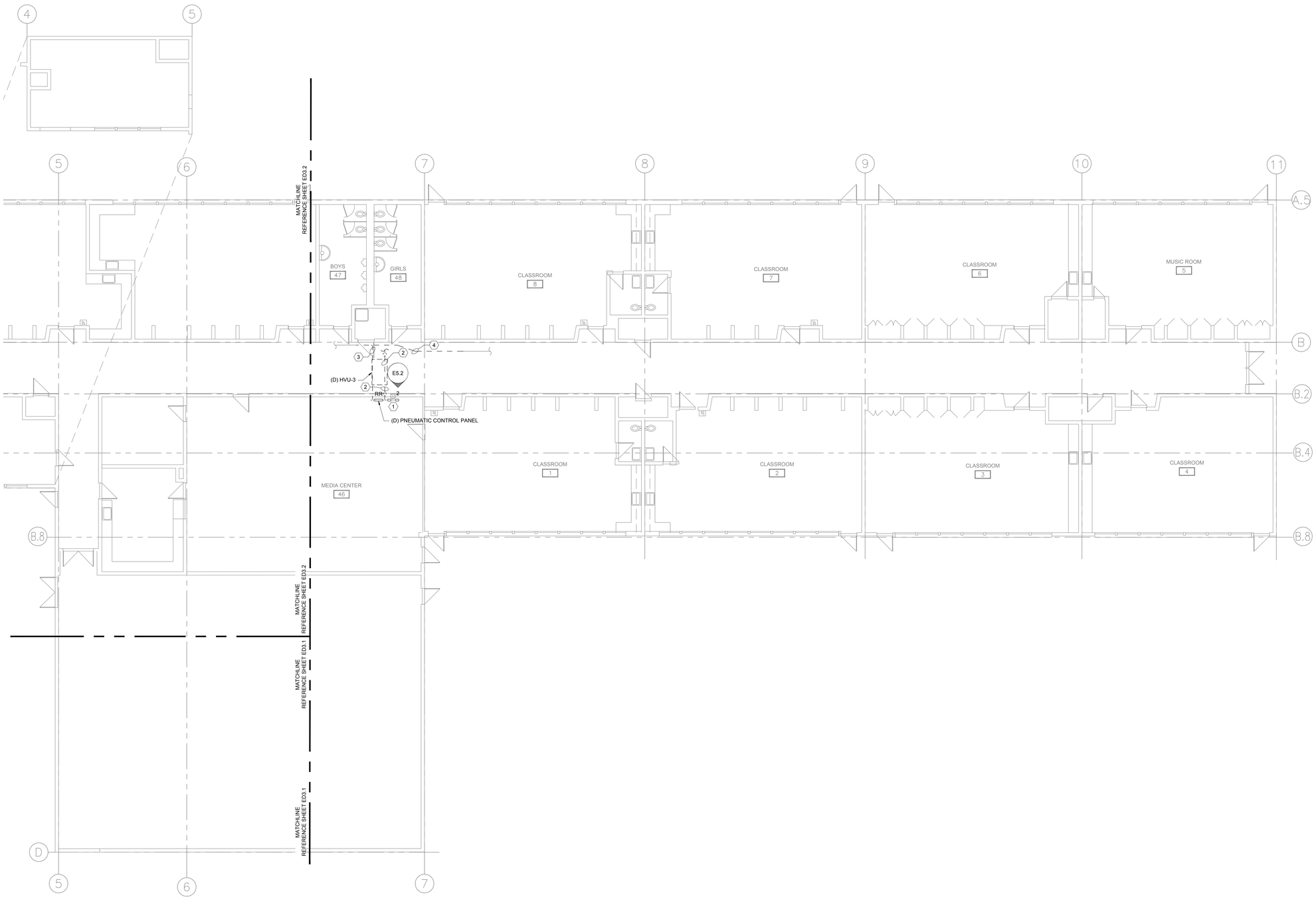

1 ELECTRICAL DEMOLITION ATTIC PLAN - C
SCALE: 1/8" = 1'-0"

SHEET KEY NOTES

1. DEMOLISH MOTOR STARTERS, DISCONNECT, AND BRANCH CIRCUIT CONDUIT AND WIRE TO SOURCE.
2. CONTRACTOR SHALL REMOVE AND REINSTALL LUMINAIRES AND ASSOCIATED CONDUIT AND WIRE. THE LUMINAIRE, CONDUIT AND WIRING SHALL BE REMOVED TO ALLOW THE ROOF TO BE CUT OPEN AND THE HAVE UNIT DEMOLISHED.
3. CONTRACTOR SHALL REMOVE AND REINSTALL APPROXIMATELY FIVE (5) HORIZONTAL DATA CABLES TO ALLOW THE ROOF TO BE OPENED. DISCONNECT, COIL, AND PROTECT THE CABLES. CONTRACTOR SHALL LABEL ALL CABLES BEFORE DISCONNECTING. CABLES SHALL BE RE-INSTALLED.
4. CONTRACTOR SHALL DISCONNECT APPROXIMATELY 90 DATA CABLES FROM THE IT RACK AND PULL BACK INTO THE ATTIC. CONTRACTOR SHALL LABEL ALL CABLES BEFORE DISCONNECTING. DISCONNECT CABLES TO THE EXTENT REQUIRED TO PROVIDE SUFFICIENT SLACK IN THE CABLES TO RELOCATE THEM. THE CABLES SHALL BE RELOCATED ON THE WALL TO AVOID THE NEW HATCH INSTALLATION.

REGISTERED PROFESSIONAL ENGINEER
86683
Digital Signature
OREGON
MAY 08, 2012
BENJAMIN E. FISHER
EXPIRES: 12-31-2020

Date:	10-21-2020 BID SET
Proj No:	10064
Drawn By:	SR
Chkd By:	BEP
DSGN By:	BEP
Acad File:	

SUNRISE ELEMENTARY SCHOOL
MECHANICAL EQUIPMENT REPLACEMENT - PHASE I
730 SE 19TH AVE
ALBANY OREGON 97322

ELECTRICAL DEMOLITION ATTIC PLAN – C

MEA INC.

Consulting Engineers
2007 S.E. Ash St.
Portland, OR 97214
PHN: (503) 234-0548
FAX: (503) 234-0677
WWW.MEA-ENG.COM

SHEET
ED3.3
OF

Landis Consulting
ENGINEERING SERVICES
Salem | Lake Oswego
503-584-1576
www.landisconsulting.com

SHEET KEY NOTES

1. REINSTALL LUMINAIRES, FIRE ALARM DEVICES, AND AUDIO SPEAKERS TO ALLOW THE CEILING TO BE REMOVED AND RE-INSTALLED. INTERCEPT AND ALL CONDUIT AND WIRING REQUIRED. RE-INSTALL LOW VOLTAGE CABLING SO THAT THE CABLING.

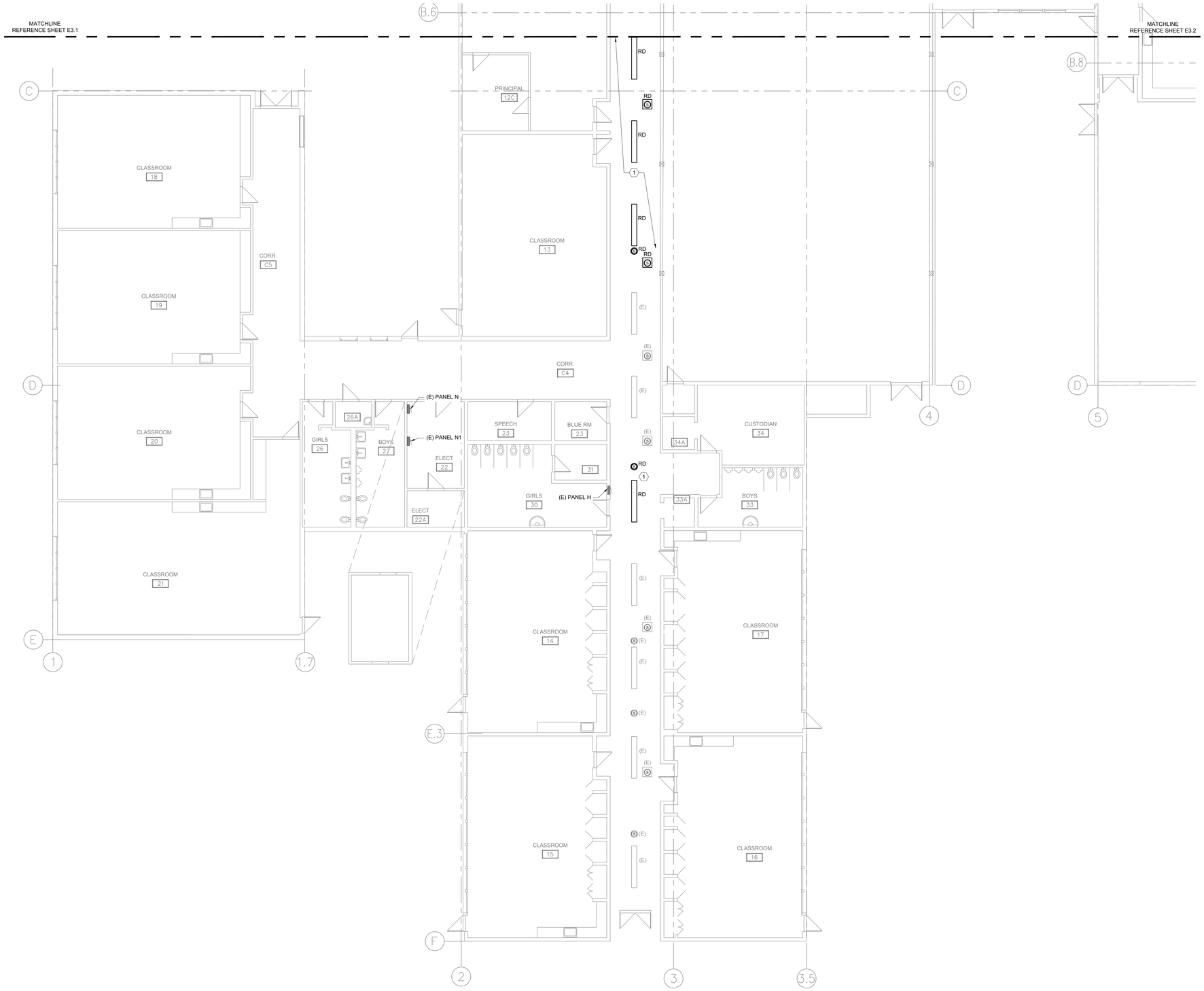

1 ELECTRICAL FIRST FLOOR PLAN - A
SCALE: 1/8" = 1'-0"

Landis Consulting
ENGINEERING SERVICES
Salem | Lake Oswego
503-584-1576
www.landisconsulting.com

REGISTERED PROFESSIONAL ENGINEER
86683
Digital Signature
OREGON
MAY 08, 2012
BENJAMIN E. FERRY
EXPIRES: 12-31-2020

Date:	10-21-2020 BID SET
Proj No:	10064
Drawn By:	SR
Chkd By:	BEP
DSGN By:	BEP
Acad File:	

SUNRISE ELEMENTARY SCHOOL
MECHANICAL EQUIPMENT REPLACEMENT - PHASE I
730 SE 19TH AVE
ALBANY OREGON 97322

ELECTRICAL FIRST FLOOR PLAN – A

MFIA INC.

Consulting Engineers
2007 S.E. Ash St.
Portland, OR 97214
PHN: (503) 234-0548
FAX: (503) 234-0677
WWW.MFIA-ENG.COM

SHEET
E2.1
OF

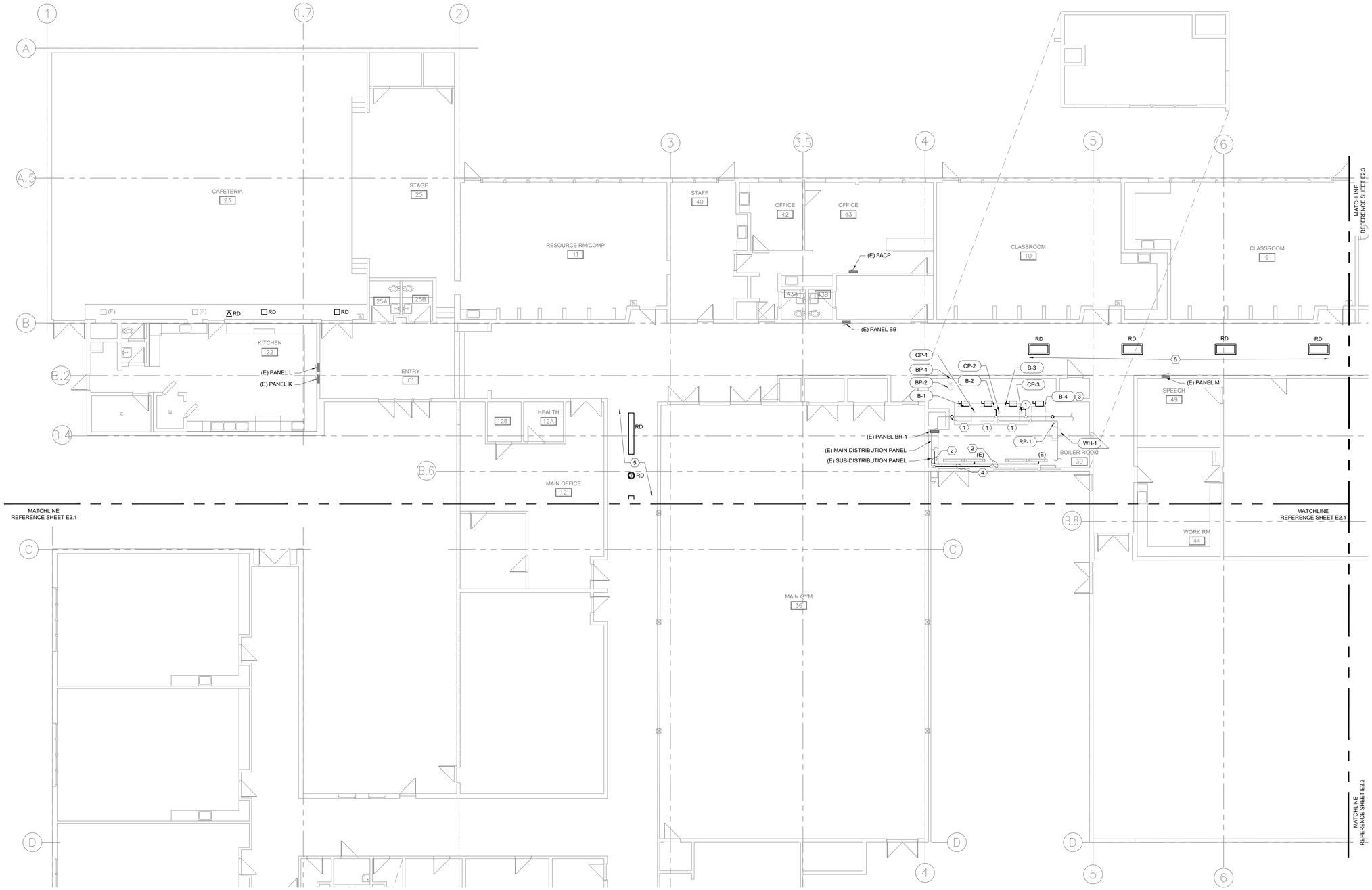

1 ELECTRICAL FIRST FLOOR PLAN - B
SCALE: 1/8" = 1'-0"

SHEET KEY NOTES

1. CONTRACTOR SHALL UTILIZE EXISTING 1/2" CONDUIT FOR NEW BOILERS BRANCH CIRCUITS. INTERCEPT AND EXTEND CONDUIT TO NEW BOILERS.
2. CONTRACTOR SHALL REINSTALL EXISTING LUMINAIRES INSTALL CONDUIT AND WIRE AND RECONNECT TO EXISTING LUMINAIRES.
3. FUTURE BOILER.
4. CONTRACTOR SHALL REINSTALL BRANCH CIRCUIT CONDUIT AND WIRE REMOVED DURING DEMOLITION
5. REINSTALL LUMINAIRES, FIRE ALARM DEVICES, AND AUDIO SPEAKERS TO ALLOW THE CEILING TO BE REMOVED AND RE-INSTALLED. INTERCEPT AND ALL CONDUIT AND WIRING REQUIRED. RE-INSTALL LOW VOLTAGE CABLING SO THAT THE CABLING. .

REGISTERED PROFESSIONAL ENGINEER
86683
Digital Signature
OREGON
MAY 08, 2012
BENJAMIN E. FOSBRY
EXPIRES: 12-31-2020

Date:	10-21-2020 BID SET
Proj No:	10064
Drawn By:	SR
Chkd By:	BEP
DSGN By:	BEP
Acad File:	

SUNRISE ELEMENTARY SCHOOL
MECHANICAL EQUIPMENT REPLACEMENT - PHASE I
730 SE 19TH AVE
ALBANY OREGON 97322

ELECTRICAL FIRST FLOOR PLAN – B

MFA INC.

Consulting Engineers
2007 S.E. Ash St.
Portland, OR 97214
PHN: (503) 234-0548
FAX: (503) 234-0677
WWW.MFA-ENG.COM

SHEET
E2.2
OF

Landis Consulting
ENGINEERING SERVICES
Salem | Lake Oswego
503-584-1576
www.landisconsulting.com

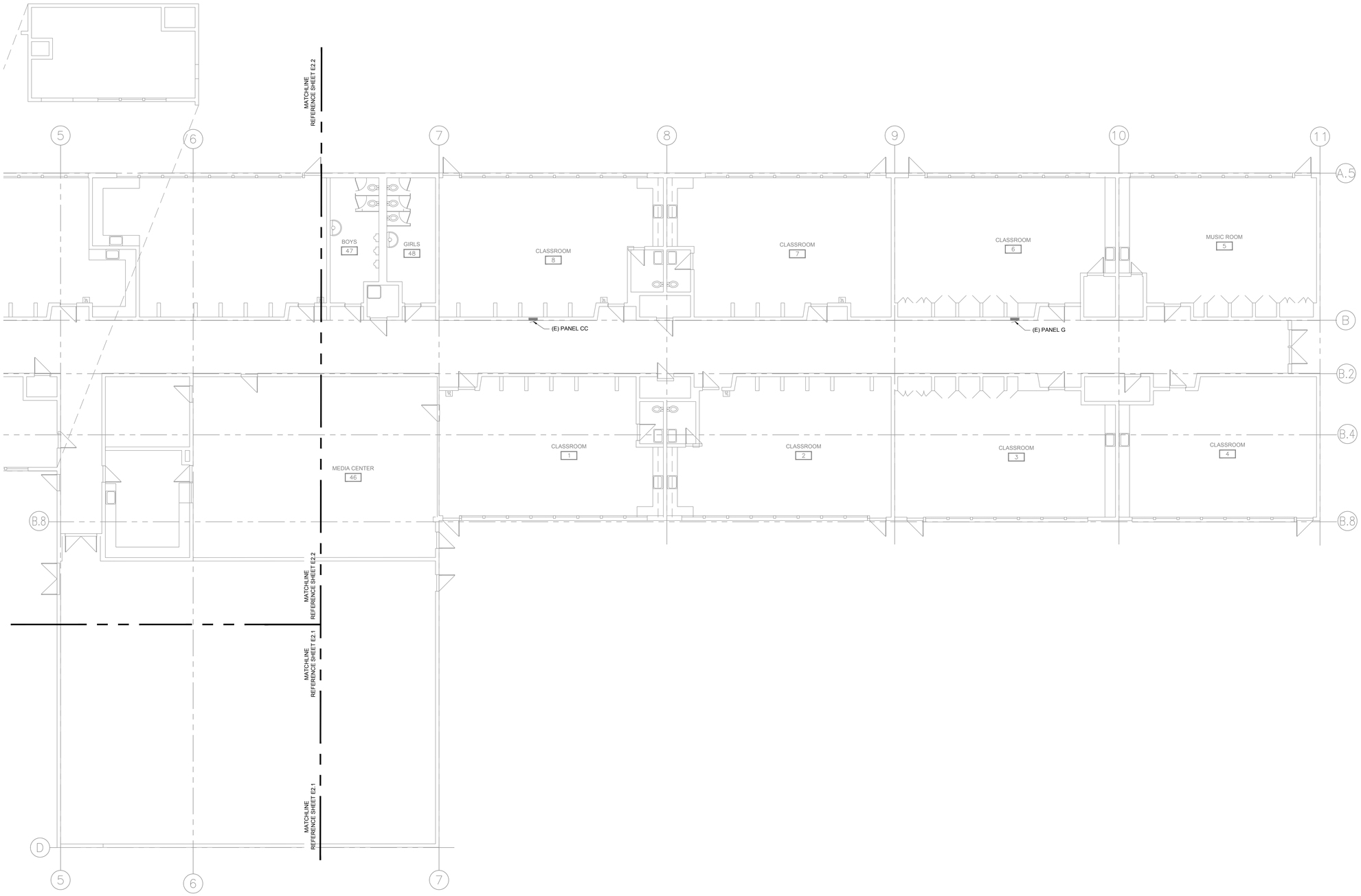

1 ELECTRICAL FIRST FLOOR PLAN - C
SCALE: 1/8" = 1'-0"

Landis Consulting
ENGINEERING SERVICES
Salem | Lake Oswego
503-584-1576
www.landisconsulting.com

REGISTERED PROFESSIONAL ENGINEER
86683
Digital Signature
OREGON
MAY 08, 2012
BENJAMIN E. FERRY
EXPIRES: 12-31-2020

Date:	10-21-2020 BID SET
Proj No:	10054
Drawn By:	SR
Chkd By:	BEP
DSGN By:	BEP
Acad File:	

SUNRISE ELEMENTARY SCHOOL
MECHANICAL EQUIPMENT REPLACEMENT - PHASE I
730 SE 19TH AVE
ALBANY OREGON 97322

ELECTRICAL FIRST FLOOR PLAN – C

MFIA INC.

Consulting Engineers
2007 S.E. Ash St.
Portland, OR 97214
PHN: (503) 234-0548
FAX: (503) 234-0677
WWW.MFIA-ENG.COM

SHEET
E2.3
OF

SHEET KEY NOTES

1. CONDUIT AND WIRE SHALL BE INTERCEPTED AND EXTENDED FOR NEW HATCH INSTALLATION ON WALL. CONDUIT SHALL NOT BLOCK ACCESS TO THE NEW HATCH.
2. RELOCATED DATA CABLES TO WALL. CABLES SHALL NOT BLOCK ACCESS TO THE NEW HATCH. CONTRACTOR SHALL PROVIDE NEW HARDWARE REQUIRED. RE-TERMINATE ALL CABLES ON THE IDF RACKS AND PROVIDE TESTING PER EIA/TIA STANDARDS. PROVIDE TEST RESULTS TO THE NEW OWNER AND ENGINEER FOR REVIEW.

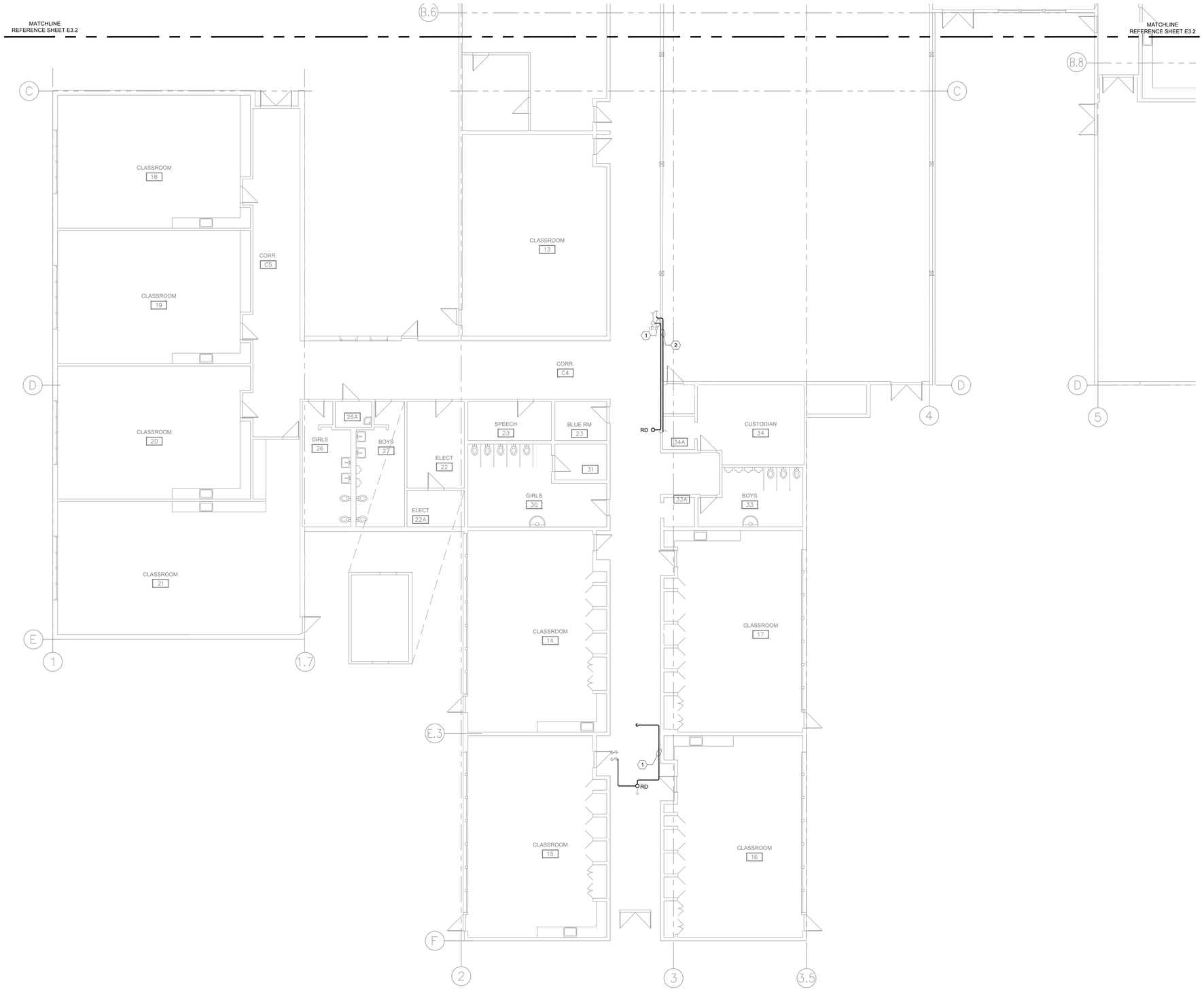

1 ELECTRICAL ATTIC PLAN - A
SCALE: 1/8" = 1'-0"

REGISTERED PROFESSIONAL ENGINEER
86683
Digital Signature
OREGON
MAY 08, 2012
BENJAMIN E. FERRY
EXPIRES: 12-31-2020

Date:	10-21-2020 BID SET
Proj No:	10064
Drawn By:	SR
Chkd By:	BEP
DSGN By:	BEP
Acad File:	

SUNRISE ELEMENTARY SCHOOL
MECHANICAL EQUIPMENT REPLACEMENT - PHASE I
730 SE 19TH AVE
ALBANY OREGON 97322

ELECTRICAL ATTIC PLAN – A

MFA INC.

Consulting Engineers
2007 S.E. Ash St.
Portland, OR 97214
PHN: (503) 234-0548
FAX: (503) 234-0677
WWW.MFA-ENG.COM

Landis Consulting
ENGINEERING SERVICES
Salem | Lake Oswego
503-584-1576
www.landisconsulting.com

SHEET
E3.1
OF

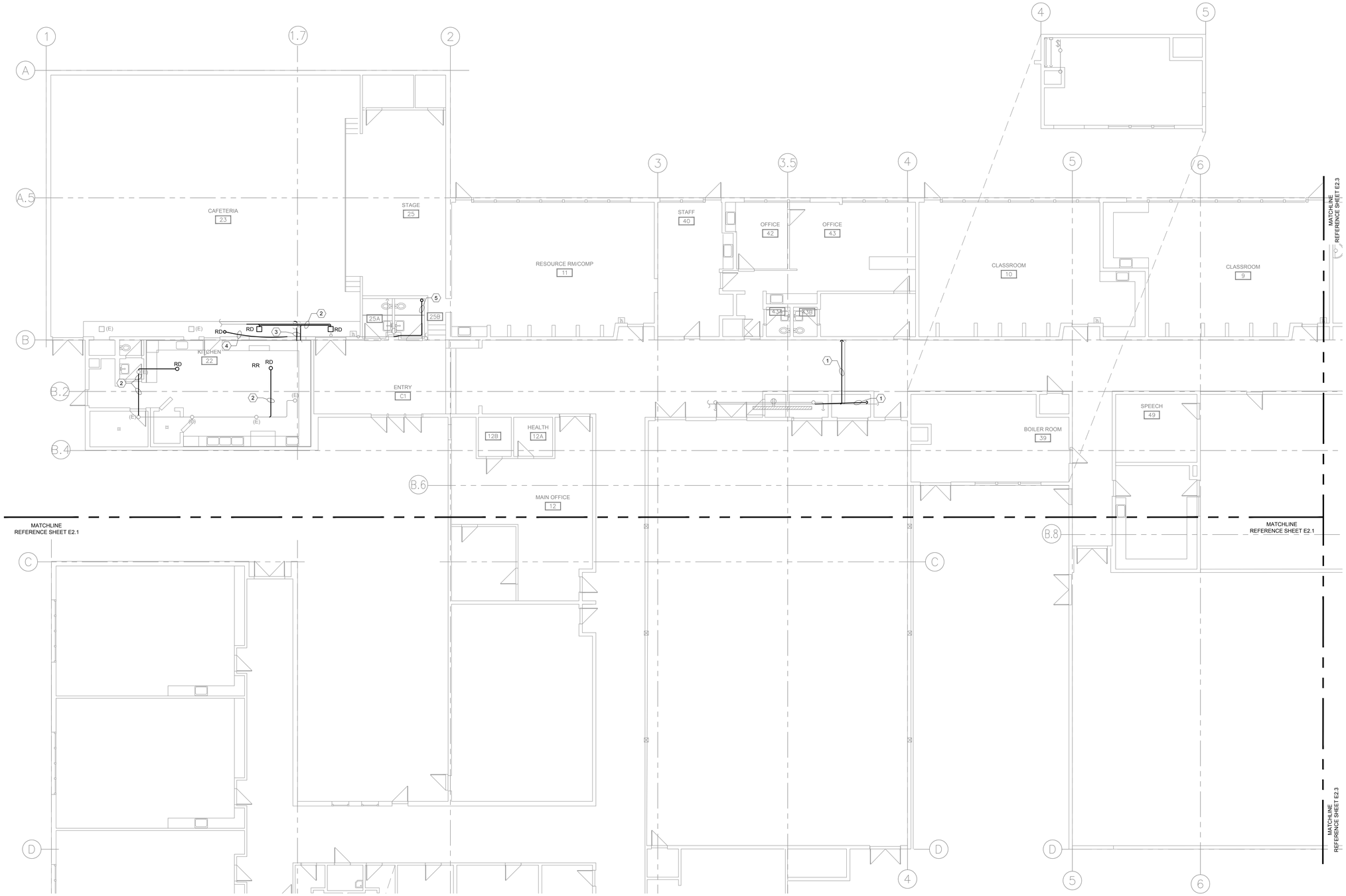

1 ELECTRICAL ATTIC PLAN - B
SCALE: 1/8" = 1'-0"

SHEET KEY NOTES

1. RELOCATED DATA CABLES TO WALL. CABLES SHALL NOT BLOCK ACCESS TO THE NEW HATCH. CONTRACTOR SHALL PROVIDE NEW HARDWARE REQUIRED. RE-TERMINATE ALL CABLES ON THE IDF RACKS AND PROVIDE TESTING PER EIA/TIA STANDARDS. PROVIDE TEST RESULTS TO THE NEW OWNER AND ENGINEER FOR REVIEW.
2. CONTRACTOR SHALL REINSTALL LUMINAIRES AND ASSOCIATED CONDUIT AND WIRE.
3. CONTRACTOR SHALL REINSTALL CONDUIT AND WIRE REMOVED DURING DEMOLITION.
4. CONTRACTOR SHALL RECONNECT AND REINSTALL FOUR (4) DATA CABLES REMOVED DURING DEMOLITION.
5. CONDUIT AND WIRING SHALL BE INTERCEPTED, EXTENDED TO THE NEW LOCATION OF EXISTING EXHAUST FAN.

REGISTERED PROFESSIONAL ENGINEER
86683
Digital Signature
OREGON
MAY 08, 2012
BENJAMIN E. FISHER
EXPIRES: 12-31-2020

Date:	10-21-2020 BID SET
Proj No:	10064
Drawn By:	SR
Chkd By:	BEP
DSGN By:	BEP
Acad File:	

SUNRISE ELEMENTARY SCHOOL
MECHANICAL EQUIPMENT REPLACEMENT - PHASE I
730 SE 19TH AVE
ALBANY OREGON 97322

ELECTRICAL ATTIC PLAN – B

MFIA INC.

Consulting Engineers
2007 S.E. Ash St.
Portland, OR 97214
PHN: (503) 234-0548
FAX: (503) 234-0677
WWW.MFIA-ENG.COM

SHEET
E3.2
OF

Landis Consulting
ENGINEERING SERVICES
Salem | Lake Oswego
503-584-1576
www.landisconsulting.com

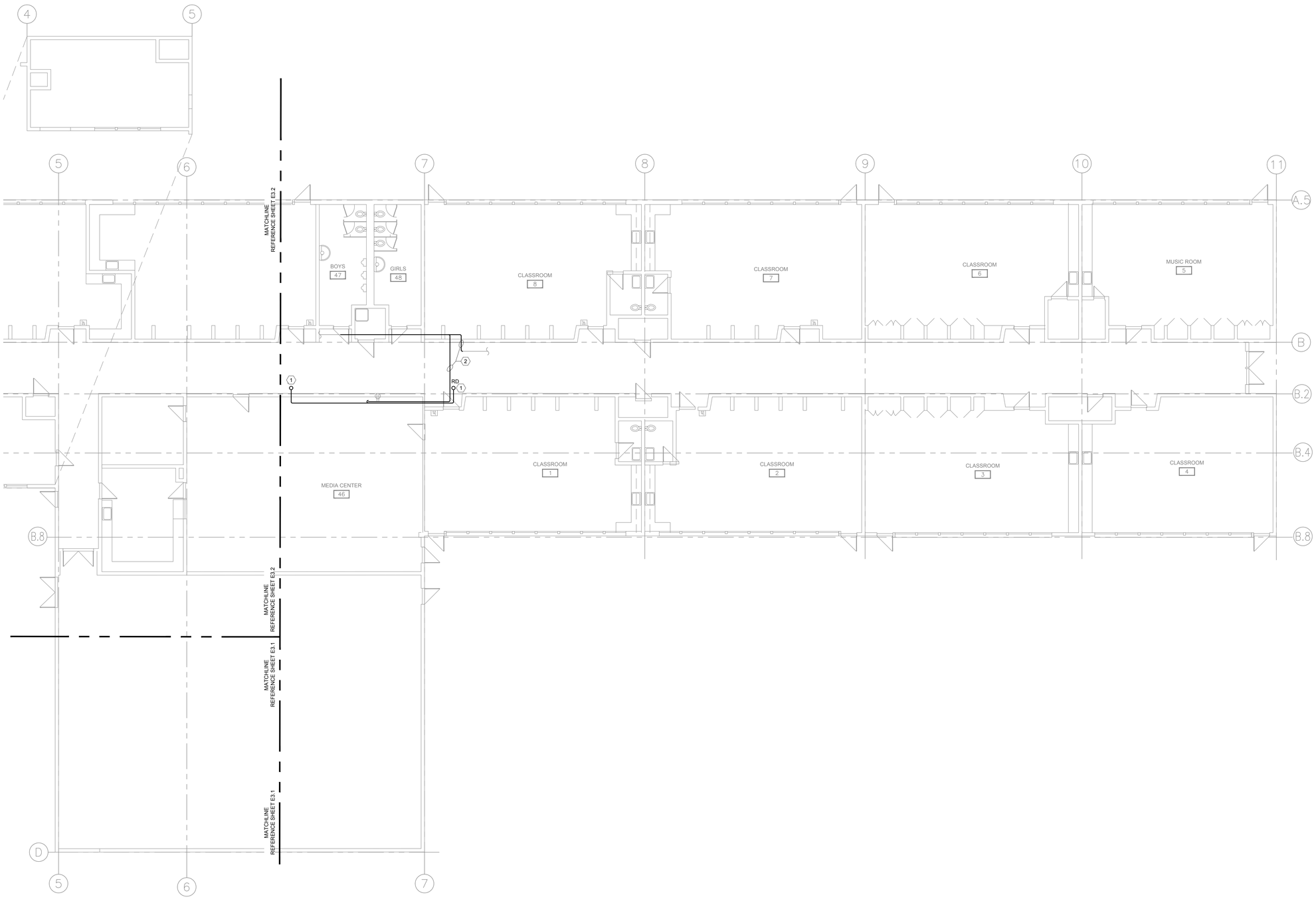

1 ELECTRICAL ATTIC PLAN - C
SCALE: 1/8" = 1'-0"

SHEET KEY NOTES

1. CONTRACTOR SHALL REINSTALL LUMINAIRE FIXTURE AND ASSOCIATED CONDUIT AND WIRE CONDUIT SHALL NOT BLOCK ACCESS TO THE NEW HATCH.
2. RELOCATED DATA CABLES TO WALL. CABLES SHALL NOT BLOCK ACCESS TO THE NEW HATCH. CONTRACTOR SHALL PROVIDE NEW HARDWARE REQUIRED. RE-TERMINATE ALL CABLES ON THE IDF RACKS AND PROVIDE TESTING PER EIA/TIA STANDARDS. PROVIDE TEST RESULTS TO THE OWNER AND ENGINEER FOR REVIEW.

REGISTERED PROFESSIONAL ENGINEER
86683
Digital Signature
OREGON
MAY 08, 2012
BENJAMIN E. FOSBY
EXPIRES: 12-31-2020

Date:	10-21-2020 BID SET
Proj No:	10064
Drawn By:	SR
Chkd By:	BEP
DSGN By:	BEP
Acad File:	

SUNRISE ELEMENTARY SCHOOL
MECHANICAL EQUIPMENT REPLACEMENT - PHASE I
730 SE 19TH AVE
ALBANY OREGON 97322

ELECTRICAL ATTIC PLAN – C

MEI A INC.

Consulting Engineers
2007 S.E. Ash St.
Portland, OR 97214
PHN: (503) 234-0548
FAX: (503) 234-0677
WWW.MEIA-ENG.COM

SHEET
E3.3
OF

Landis Consulting
ENGINEERING SERVICES
Salem | Lake Oswego
503-584-1576
www.landisconsulting.com

1 ELECTRICAL ROOF PLAN - A
SCALE: 1/8" = 1'-0"

Landis Consulting
ENGINEERING SERVICES
Salem | Lake Oswego
503-584-1576
www.landisconsulting.com

REGISTERED PROFESSIONAL ENGINEER
86683
Digital Signature
OREGON
MAY 08, 2012
BENJAMIN E. PERRY
EXPIRES: 12-31-2020

Date:	10-21-2020 BID SET
Proj No:	10054
Drawn By:	SR
Chkd By:	BEP
DSGN By:	BEP
Acad File:	

SUNRISE ELEMENTARY SCHOOL
MECHANICAL EQUIPMENT REPLACEMENT - PHASE I
730 SE 19TH AVE
ALBANY OREGON 97322

ELECTRICAL ROOF PLAN – A

MEIA INC.

Consulting Engineers
2007 S.E. Ash St.
Portland, OR 97214
PHN: (503) 234-0548
FAX: (503) 234-0677
WWW.MEIA-ENG.COM

SHEET
E4.1
OF

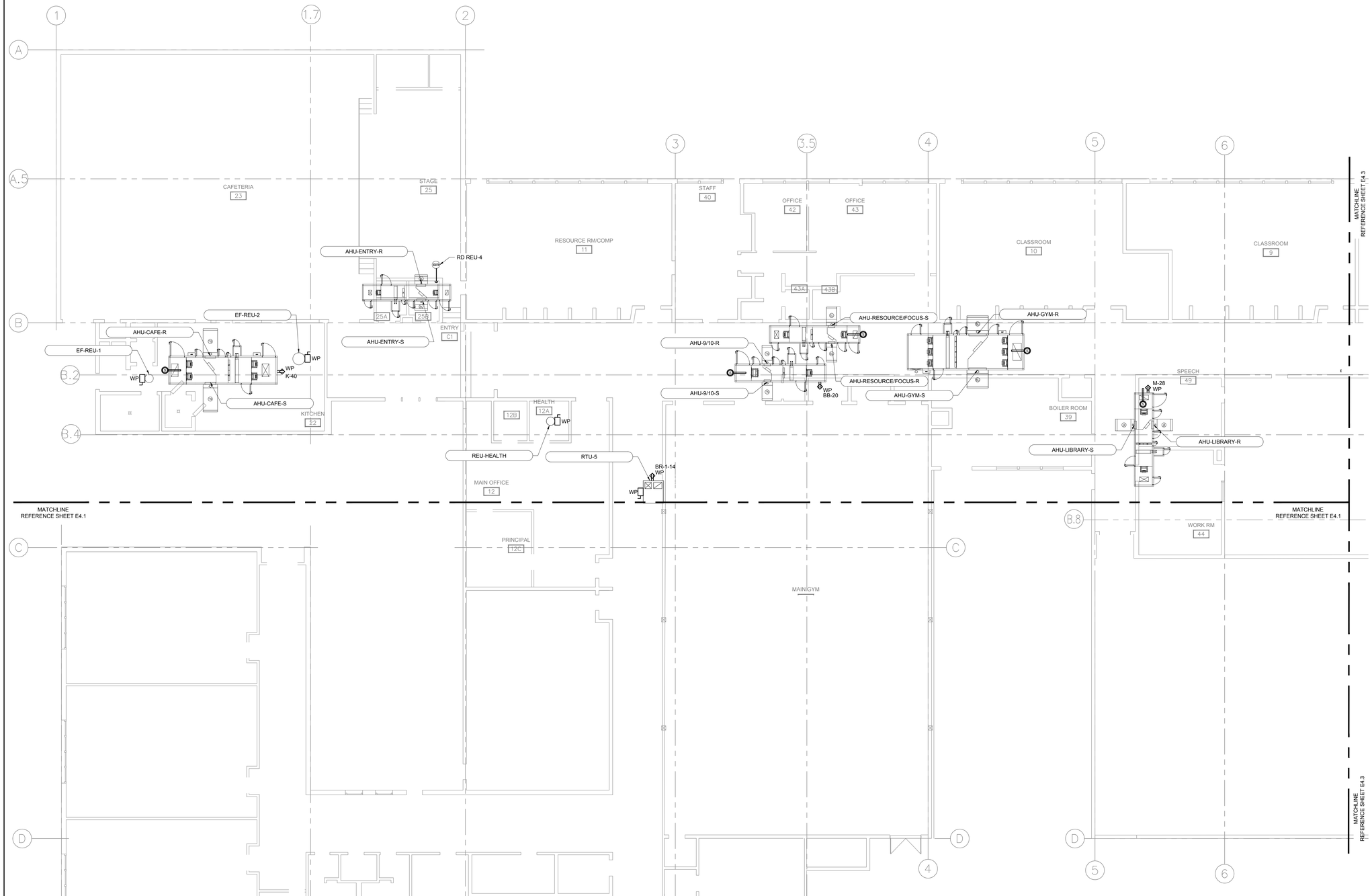

1 ELECTRICAL ROOF PLAN - B
SCALE: 1/8" = 1'-0"

Landis Consulting
ENGINEERING SERVICES
Salem | Lake Oswego
503-584-1576
www.landisconsulting.com

REGISTERED PROFESSIONAL ENGINEER
86683
Digital Signature
OREGON
MAY 08, 2012
BENJAMIN E. FOSBRY
EXPIRES: 12-31-2020

Date:	10-21-2020 BID SET
Proj No:	10064
Drawn By:	SR
Chkd By:	BEP
DSGN By:	BEP
Acad File:	

SUNRISE ELEMENTARY SCHOOL
MECHANICAL EQUIPMENT REPLACEMENT - PHASE I
730 SE 19TH AVE
ALBANY OREGON 97322

ELECTRICAL ROOF PLAN – B

MEA INC.

Consulting Engineers
2007 S.E. Ash St.
Portland, OR 97214
PHN: (503) 234-0548
FAX: (503) 234-0677
WWW.MEA-ENG.COM

SHEET
E4.2
OF

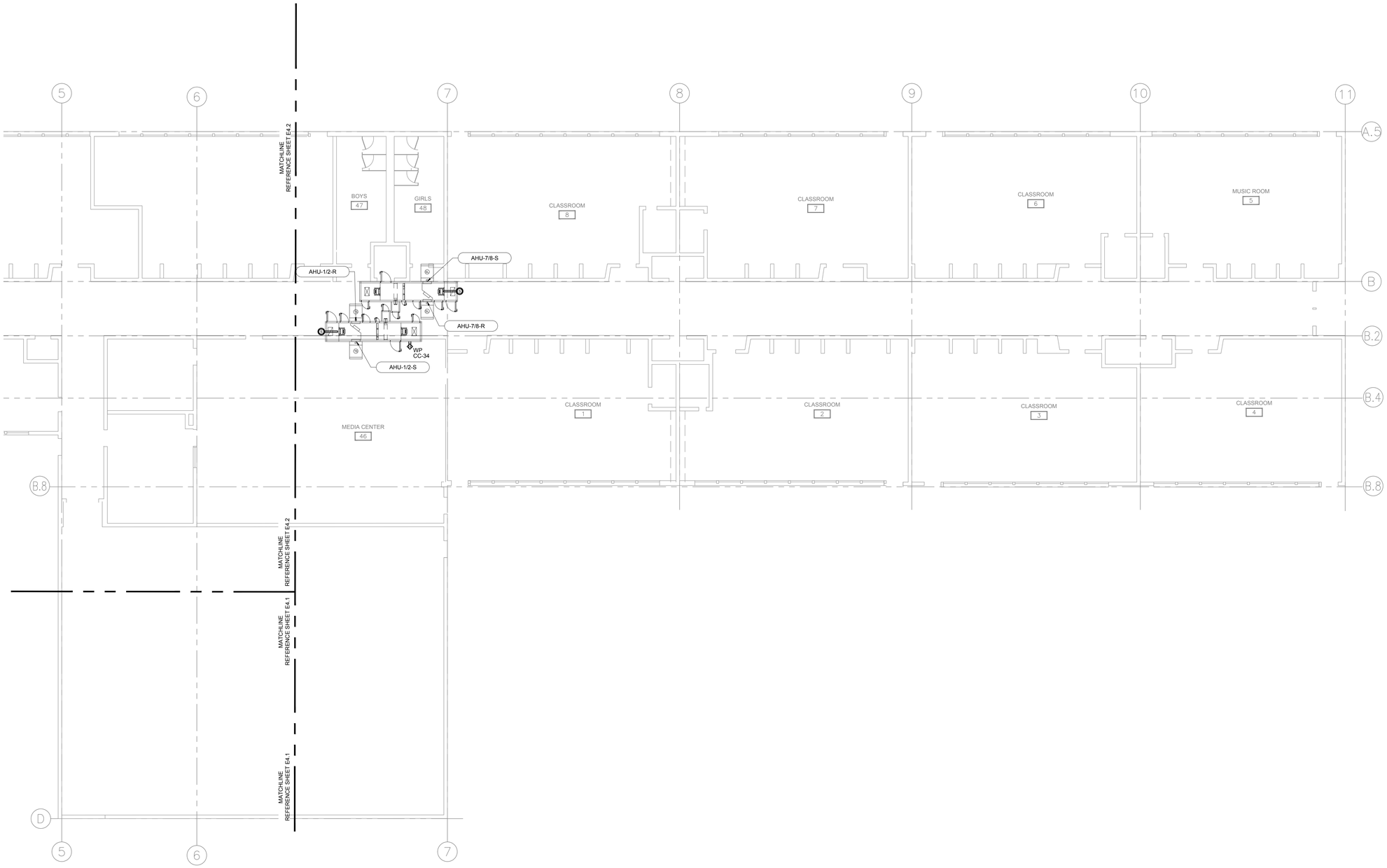

1 ELECTRICAL ROOF PLAN - C
SCALE: 1/8" = 1'-0"

Landis Consulting
ENGINEERING SERVICES
Salem | Lake Oswego
503-584-1576
www.landisconsulting.com

REGISTERED PROFESSIONAL ENGINEER
86683
Digital Signature
OREGON
MAY 08, 2012
BENJAMIN E. FOSBRY
EXPIRES: 12-31-2020

Date:	10-21-2020 BID SET
Proj No:	10054
Drawn By:	SR
Chkd By:	BEP
DSGN By:	BEP
Acad File:	

SUNRISE ELEMENTARY SCHOOL
MECHANICAL EQUIPMENT REPLACEMENT - PHASE I
730 SE 19TH AVE
ALBANY OREGON 97322

ELECTRICAL ROOF PLAN – C

MFIA INC.

Consulting Engineers
2007 S.E. Ash St.
Portland, OR 97214
PHN: (503) 234-0548
FAX: (503) 234-0677
WWW.MFIA-ENG.COM

SHEET
E4.3
OF

1 MOTOR STARTESR UNIT HVU-1 & 2
SCALE: NTS

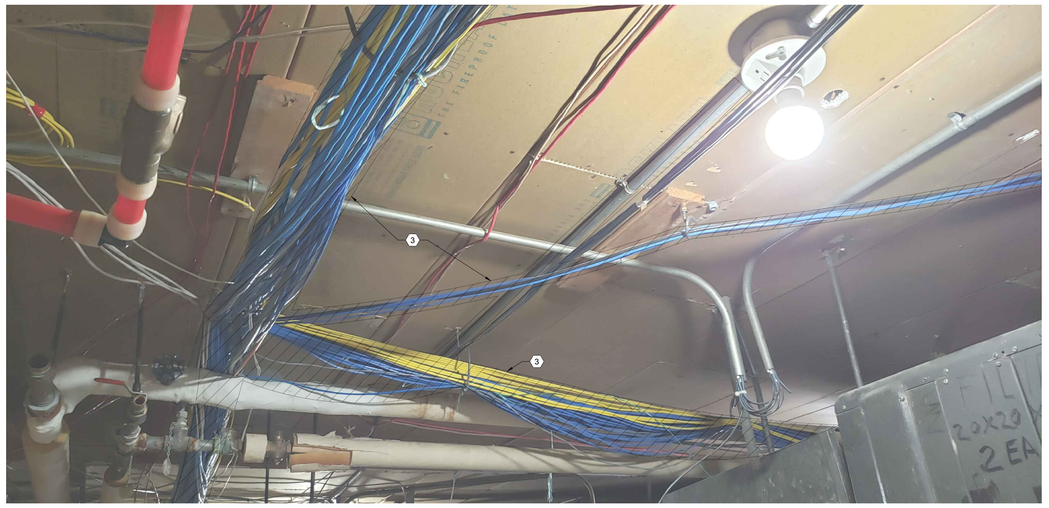

2 DATA CABLES, HVU-4 & 5
SCALE: NTS

3 MZU-1 & CEU-1
SCALE: NTS

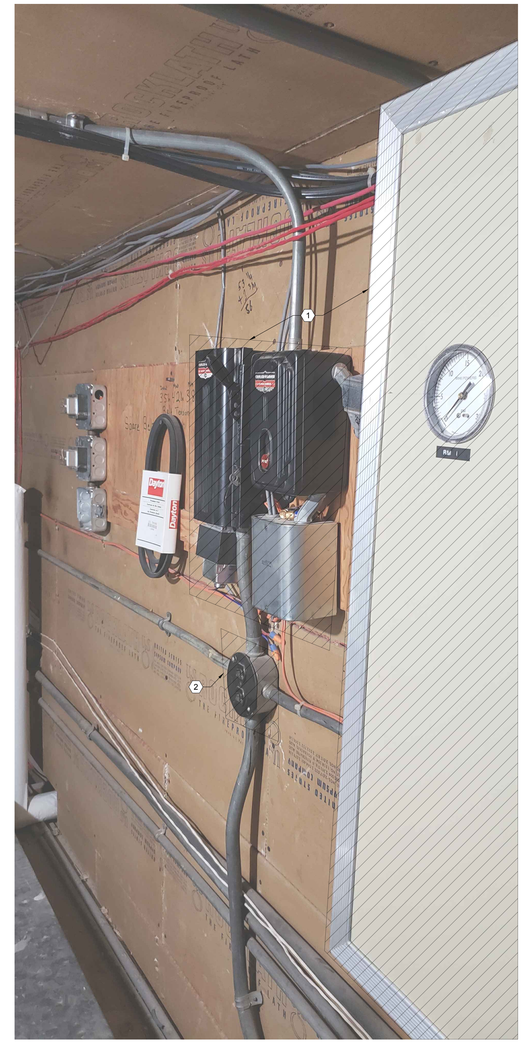

4 MOTOR STARTESR UNIT HVU-4 & 5
SCALE: NTS

SHEET KEY NOTES

1. CONTRACTOR SHALL DEMOLISH EQUIPMENT AS SHOWN.
2. CONTRACTOR SHALL PROTECT RECEPTACLE AND CONDUIT DURING DEMOLITION WORK.
3. CONTRACTOR SHALL DISCONNECT AND RELOCATE DATA CABLES. SEE SHEET E3.1 FOR ADDITIONAL INFORMATION.

Landis Consulting
ENGINEERING SERVICES
Salem | Lake Oswego
503-584-1576
www.landisconsulting.com

REGISTERED PROFESSIONAL ENGINEER
86683
Digital Signature
OREGON
MAY 08, 2012
BENJAMIN E. FERRY
EXPIRES: 12-31-2020

Date:	10-21-2020 BID SET
Proj No:	10064
Drawn By:	SR
Chkd By:	BEP
DSGN By:	BEP
Acad File:	

SUNRISE ELEMENTARY SCHOOL
MECHANICAL EQUIPMENT REPLACEMENT - PHASE I
730 SE 19TH AVE
ALBANY OREGON 97322

ELECTRICAL DEMOLITION PHOTOS

MFIA INC.
Consulting Engineers
2007 S.E. Ash St.
Portland, OR 97214
PHN: (503) 234-0548
FAX: (503) 234-0577
WWW.MFIA-ENG.COM

SHEET
E5.1
OF

SHEET KEY NOTES

1. CONTRACTOR SHALL DEMOLISH EQUIPMENT AS SHOWN.
2. CONTRACTOR SHALL PROTECT SWITCH AND CONDUIT DURING DEMOLITION WORK.
3. REMOVE EQUIPMENT. CAP CONDUIT AND WIRE AS REQUIRED DURING DEMOLITION.

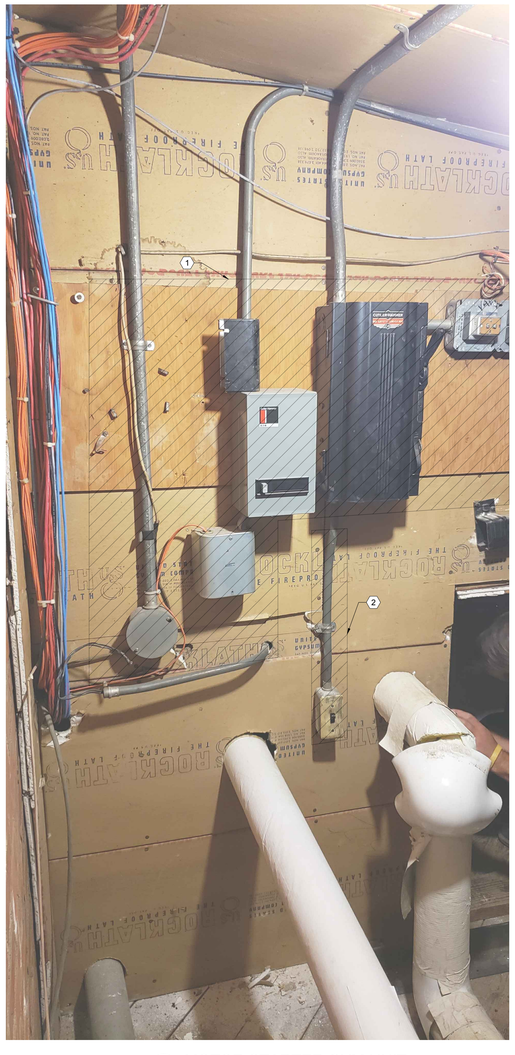

1 MOTOR STARTER GYM UNIT
SCALE: NTS

2 MOTOR STARTER UNIT HVU-3
SCALE: NTS

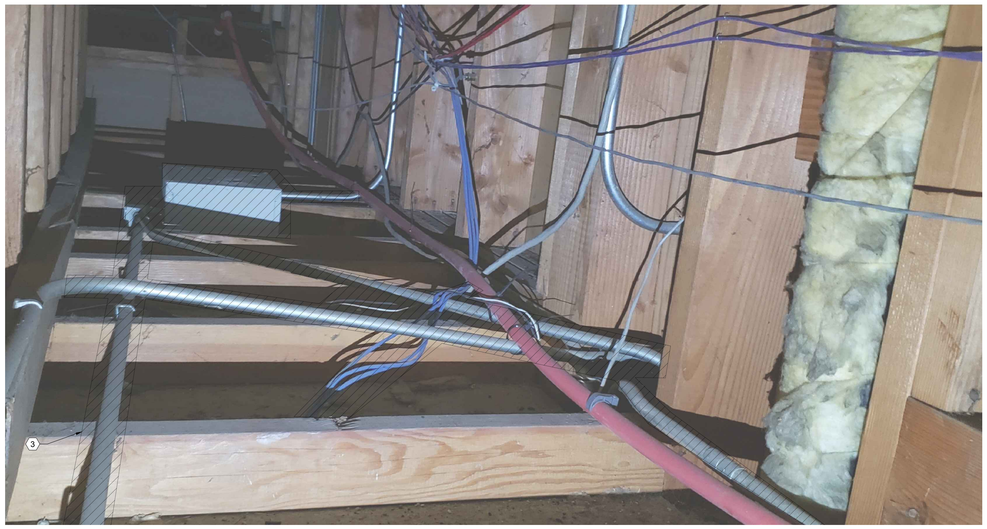

3 SOFFIT ABOVE CAFETERIA
SCALE: NTS

4 JANITORS CLOSET
SCALE: NTS

Landis Consulting
ENGINEERING SERVICES
Salem | Lake Oswego
503-584-1576
www.landisconsulting.com

REGISTERED PROFESSIONAL ENGINEER
86683
Digital Signature
OREGON
MAY 08, 2012
BENJAMIN E. PERRY
EXPIRES: 12-31-2020

Date:	10-21-2020 BID SET
Proj No:	10064
Drawn By:	SR
Chkd By:	BEP
DSGN By:	BEP
Acad File:	

SUNRISE ELEMENTARY SCHOOL
MECHANICAL EQUIPMENT REPLACEMENT - PHASE I
730 SE 19TH AVE
ALBANY OREGON 97322

ELECTRICAL DEMOLITION PHOTOS

MFIA INC.

Consulting Engineers
2007 S.E. Ash St.
Portland, OR 97214
PHN: (503) 234-0548
FAX: (503) 234-0677
WWW.MFIA-ENG.COM

SHEET
E5.2
OF

PANEL NAME: BB
VOLT/PHASE: 120/240V, 1Ø
NUM. POLES: 42
AIC RATING: 10,000
NOTES: EXISTING PANEL
REF. KEY NOTE #:

LOCATION: CORRIDOR
FED FROM: XXX
BREAKER MOUNTING: BOLTED
MAIN LUGS ONLY
BUS RATING AMPS: 225
SPD: NO

NOTES	LOAD DESCRIPTION	LOAD TYPE	VA L1	VA L2	TRIP RATING AMPS	CIRCUIT NUMBER	CIRCUIT NUMBER	TRIP RATING AMPS	VA L1	VA L2	LOAD TYPE	LOAD DESCRIPTION	NOTES
	ATTIC RECEPTACLE	R	180		20	1	2	20	888		L	CORRIDOR LIGHTS	
	LOBBY LIGHTS	L		400	15	3	4	20		1,408	L	CORRIDOR LIGHTS	
	CEILING ROOM 6	L	440		15	5	6	20	440		L	CEILING RM. 6, LIGHTS RM. 10	
	COMPUTER RECEPTACLE RM. 10 UNDER WINDOW	R		180	15	7	8	15		360	R	COMPUTER RECEPTACLE RM. 10	
	COMPUTER RECEPTACLE RM. 10	R	360		15	9	10	15	900		R	COMPUTER RECEPTACLE RM. 10	
	COMPUTER RECEPTACLE RM. 10	R		360	15	11	12	15		360	R	COMPUTER RECEPTACLE RM. 10	
	KITCHEN CEILING	L	440		20	13	14	15	1,280		L	PLAY AREA	
	KITCHEN CEILING	L		440	15	15	16	15		440	L	OFFICE LIGHTS	
	ALCOVE LIGHTS, RM. 5, 6, RECEPTACLE RM. 9, 10	L	880		15	17	18	15	172		L	FLOOR LIGHTS	
	ALCOVE RECEPTACLE RM. 5, 6	L		440	15	19	20	20		180	R	ROOF TOP RECEPTACLE	1
	FIRE ALARM	R	600		20	21	22	25	1,200		M	EXHAUST FAN EF-HEALTH	1
	SPARE			-	15	23	24	15		900	R	WIRE MOLD RM. 10, CLOCK-RECEPTACLE OLD OFFICE	
	RECEPTACLE RM. 7	R	900		20	25	26	20	900		R	FRECEPTACLE PRINCIPALS OFFICE	
	RECEPTACLE TEACHERS ROOM	R		900	20	27	28	20		1,200	M	FAN TEACHERS ROOM	
	RECEPTACLE FOCUS ROOM	R	900		20	29	30	20	1,200		M	FAN MOTOR	
	FAN MOTOR	M		1,200	20	31	32	25		-		SPARE	
	SPARE		-		-	33	34	-	-			SPARE	
1	AIR HANDLING UNIT - RETURN AHU-RESOURCE/FOCUS-R	H		696	15	35	36	15		696	H	AIR HANDLING UNIT - RETURN AHU-14/17-R	1
		H	696			37	38		696		H		
1	AIR HANDLING UNIT - SUPPLY AHU-RESOURCE/FOCUS-S	H		696	15	39	40	15		696	H	AIR HANDLING UNIT - SUPPLY AHU-14/17-S	1
		H	696			41	42		696		H		

TOTAL LOAD:	6,092	5,312	TOTAL LOAD:	8,372	6,240
COMBINED LOAD:	14,464	11,552	CONNECTED LOAD: 26,016	DEMAND LOAD:	25,427
				DEMAND AMPS:	106

Load Type Key		Demand Factor	Connected Load	Demand Load	
R	General Purpose Receptacle	100% First 10kVA, 50% thereafter	7,980	7,980	
L	Lighting	125% Load	7,668	9,585	
M1	Largest Motor	125% Load	0	0	
M	Motor	100% Load	4,800	4,800	
A	Appliance	60% Load	0	0	
H	HVAC	55% Load	5,568	3,062	
K	Kitchen	XX% Load	0	0	XX - Units of Equipment - See NEC Table 220.56
E	Equipment	100% Load	0	0	
T	Transformer	100% Load	0	0	
W	Welder	100% Load	0	0	
RV	Recreational Vehicle	XX% Load	0	0	XX - RV Sites - See NEC Table 551.71 (A)

NOTES:
1. NEW LOAD ON EXISTING PANEL. PROVIDE NEW BREAKER AND REMOVING EXISTING BREAKER. FIELD VERIFY AIC RATING WITH EXISTING BREAKERS PRIOR TO ORDERING. MATCH EXISTING RATING.

PANEL NAME: BR-1
VOLT/PHASE: 120/240V, 1Ø
NUM. POLES: 20
AIC RATING: 42,000
NOTES: EXISTING PANEL
REF. KEY NOTE #:

LOCATION: BOILER ROOM
FED FROM: XXX
BREAKER MOUNTING: BOLTED
MAIN BREAKER AMPS: 100
BUS RATING AMPS: 125
SPD: NO

NOTES	LOAD DESCRIPTION	LOAD TYPE	VA L1	VA L2	TRIP RATING AMPS	CIRCUIT NUMBER	CIRCUIT NUMBER	TRIP RATING AMPS	VA L1	VA L2	LOAD TYPE	LOAD DESCRIPTION	NOTES
	CONTROL PANEL	R	600		20	1	2	20	-			SPARE	
	SPARE			-	20	3	4			-			
	PHONE	R	180		20	5	6	20	400		H	HVAC	
	GYM EXITS	L		480	20	7	8	20		300	R	UNKNOWN LOAD	
	SPARE		-		20	9	10	20	300		R	UNKNOWN LOAD	
				-		11	12	20		300	R	CONTROL PANEL	
	SPARE		-		20	13	14	20	600		R	ROOF TOP RECEPTACLE	1
				-		15	16	20		-		SPARE	
	SPARE		-		20	17	18	25	2,160		H	ROOF TOP UNIT RTU-5	1
				-		19	20			2,160	H		

TOTAL LOAD:	780	480		TOTAL LOAD:	3,460	2,760	
COMBINED LOAD:	4,240	3,240	CONNECTED LOAD: 7,480		DEMAND LOAD:	5,476	
					DEMAND AMPS:	23	

Load Type Key		Demand Factor	Connected Load	Demand Load	
R	General Purpose Receptacle	100% First 10kVA, 50% thereafter	2,280	2,280	
L	Lighting	125% Load	480	600	
M1	Largest Motor	125% Load	0	0	
M	Motor	100% Load	0	0	
A	Appliance	60% Load	0	0	
H	HVAC	55% Load	4,720	2,596	
K	Kitchen	XX% Load	0	0	XX - Units of Equipment - See NEC Table 220.56
E	Equipment	100% Load	0	0	
T	Transformer	100% Load	0	0	
W	Welder	100% Load	0	0	
RV	Recreational Vehicle	XX% Load	0	0	XX - RV Sites - See NEC Table 551.71 (A)

NOTES:
1. NEW LOAD ON EXISTING PANEL. PROVIDE NEW BREAKER IN EXISTING SPACE. FIELD VERIFY AIC RATING WITH EXISTING BREAKERS PRIOR TO ORDERING. MATCH EXISTING RATING.

Landis Consulting
ENGINEERING SERVICES
Salem | Lake Oswego
503-584-1576
www.landisconsulting.com

REGISTERED PROFESSIONAL ENGINEER
86683
Digital Signature
OREGON
MAY 08, 2012
BENJAMIN E. PERRY
EXPIRES: 12-31-2020

Date: 10-21-2020 | BID SET
Proj No: 10064
Drawn By: SR
Chkd By: BEP
DSGN By: BEP
Acad File:

SUNRISE ELEMENTARY SCHOOL
MECHANICAL EQUIPMENT REPLACEMENT - PHASE I
730 SE 19TH AVE
ALBANY OREGON 97322

PANEL SCHEDULES

MFIA INC.

Consulting Engineers
2007 S.E. Ash St.
Portland, OR 97214
PHN: (503) 234-0548
FAX: (503) 234-0677
WWW.MFIA-ENG.COM

SHEET
E6.1
OF

PANEL NAME: CC
VOLT/PHASE: 120/240V, 1Ø
NUM. POLES: 42
AIC RATING: 42,000
NOTES: EXISTING PANEL
REF. KEY NOTE #:

LOCATION: CORRIDOR
FED FROM: XXX
BREAKER MOUNTING: BOLTED
MAIN LUGS ONLY
BUS RATING AMPS: 225
SPD: NO

NOTES	LOAD DESCRIPTION	LOAD TYPE	VA L1	VA L2	TRIP RATING AMPS	CIRCUIT NUMBER	CIRCUIT NUMBER	TRIP RATING AMPS	VA L1	VA L2	LOAD TYPE	LOAD DESCRIPTION	NOTES
	COMPUTER RECEPTACLE RM. 8	R	360		15	1	2	15	900		R	COMPUTER RECEPTACL RM. 8	
	COMPUTER RECEPTACLE RM. 8	R		360	15	3	4	15		900	R	COMPUTER RECEPTACL RM. 8	
	GFCI, RECEPTACLE RM. 7,8	R	360		15	5	6	15	240		R	TIOLETS RM. 1,2	
	CEILING RM. 3	L		440	15	7	8	15		440	L	CEILING RM. 3	
	CEILING RM. 3	L	440		15	9	10	15	440		L	CEILING RM. 3	
	COMPUTERS RM. 1	R		360	15	11	12	15		280	L	EMERGENCY LIGHT	
	CEILING RM. 2	L	440		15	13	14	15	440		L	CEILING RM. 2	
	CEILING RM. 2	L		440	15	15	16	15		440	L	CEILING RM. 2	
	PENTHOUSE	R	270		15	17	18	15	440		L	TOILETS RM. 1, 2	
	RECEPTACLE RM. 1 UNDER WINDOW	R		180	15	19	20	15		900	R	COMPUTER LAB	
	COMPUTER LAB	R	360		15	21	22	15	360		R	COMPUTER RECEPTACLE RM. 9	
	COMPUTER RECEPTACLE RM. 9	R		900	15	23	24	15		360	R	COMPUTER RECEPTACLE RM. 9	
	CEILING RM. 5	L	440		20	25	26	20	440		L	CEILING RM. 5	
	PLUG STRIPS, RM. 7,8,9	R		900	20	27	28	20		360	R	CORRIDOR RECEPTACLE	
	PLUG STRIP RM. 1, 2	R	900		20	29	30	25	300		M	FAN MOTOR	
	GFCI, RECEPTACLE RM. 2 COUNTER GFCI	R		360	20	31	32			300	M		
	COFFE POT	R	360		20	33	34	20	180		R	ROOF TOP RECEPTACLE	1
	FRIDGE	A		1,200	20	35	36	15		696	H	AIR HANDLING UNIT - RETURN AHU-7/8-R	1
	COUNTER GFCI	R	180		20	37	38		696		H		
	MICRO GFCI	A		180	20	39	40	15		696	H	AIR HANDLING UNIT - SUPPLY AHU-7/8-S	1
	SPACE		-		-	41	42		696		H		

TOTAL LOAD:	4,110	5,320	TOTAL LOAD:	5,132	5,372
COMBINED LOAD:	9,242	10,692	CONNECTED LOAD: 19,934	DEMAND LOAD:	19,384
				DEMAND AMPS:	81

Load Type Key		Demand Factor	Connected Load	Demand Load
R	General Purpose Receptacle	100% First 10kVA, 50% thereafter	10,050	10,025
L	Lighting	125% Load	5,120	6,400
M1	Largest Motor	125% Load	0	0
M	Motor	100% Load	600	600
A	Appliance	60% Load	1,380	828
H	HVAC	55% Load	2,784	1,531
K	Kitchen	XX% Load	0	0
E	Equipment	100% Load	0	0
T	Transformer	100% Load	0	0
W	Welder	100% Load	0	0
RV	Recreational Vehicle	XX% Load	0	0

XX - Units of Equipment - See NEC Table 220.56

XX - RV Sites - See NEC Table 551.71 (A)

NOTES:
1. PROVIDE NEW BREAKER IN EXISTING SPACE. FIELD VERIFY AIC RATING WITH EXISTING BREAKERS PRIOR TO ORDERING. MATCH EXISTING RATING.

PANEL NAME: G
VOLT/PHASE: 120/240V, 1Ø
NUM. POLES: 42
AIC RATING: 10,000
NOTES: EXISTING PANEL
REF. KEY NOTE #:

LOCATION: CORRIDOR
FED FROM: SUB-DISTRIBUTION PANEL A-1
BREAKER MOUNTING: BOLTED
MAIN LUGS ONLY
BUS RATING AMPS: 225
SPD: NO

NOTES	LOAD DESCRIPTION	LOAD TYPE	VA L1	VA L2	TRIP RATING AMPS	CIRCUIT NUMBER	CIRCUIT NUMBER	TRIP RATING AMPS	VA L1	VA L2	LOAD TYPE	LOAD DESCRIPTION	NOTES
	FLOOR HEAT PUMP	M	600		20	1	2	20	360		R	COMPUTER RECEPTACLE RM. 5	
	FLOOR HEAT PUMP	M		600	20	3	4	20		360	R	SPARE RM. 5	
	LIGHTS RM. 3	L	440		20	5	6	20	440		L	LIGHTS RM. 5	
	LIGHTS RM. 3	L		440	20	7	8	20		440	L	LIGHTS RM. 5	
	COMPUTER RECEPTACLE RM. 3	R	360		20	9	10	20	440		L	LIGHTS RM. 6	
	RECEPTACLE RM. 3 UNDER WINDOWS	R		360	20	11	12	20		440	L	LIGHTS RM. 6	
	LIGHTS RM. 4	L	440		20	13	14	20	360		R	COMPUTER RECEPTACLE RM.6	
	LIGHTS RM. 4	L		440	20	15	16	20		360	R	RECETPACEL RM. 6, CEILING, UNDER WINDOWS	
	COPMUTER RECEPTACL RM. 4	R	360		20	17	18	20	-			SPARE	
	COMPUTER RECEPTACLE RM. 4	R		360	20	19	20	20		-		SPARE	
	RECEPTACL RM. 4 UNDER WINDOWS	R	180		20	21	22	20	400		M	FAN RM. 3	
	PLUG STRIP RM. 4 & CORRIDOR	R		900	20	23	24	20		400	M	FAN RM. 3	
	OUTSID LIGHTS, RECEPTACLE IN CLOSET WITH BOOKS	M1	400		20	25	26	20	900		R	PLUG STRIP RM. 5, CORRIDOR	
	FIRE ALARM	R		600	20	27	28	20		880	L	HALL RESTROOM, PORCH	
	HEAT RM. 3	H	600		20	29	30	20	600		R	HEATING CONTROLS	
	HEAT RM. 6	H		600	20	31	32	20		600	H	HEAT RM. 5	
	HEAT RM. 5	H	600		20	33	34	20	-			SPARE	
	SPARE			-	20	35	36	15		696	H	AIR HANDLING UNIT - RETURN AHU-1/2-R	1
	SPARE		-		20	37	38		696		H		
	SPARE			-	20	39	40	15		696	H	AIR HANDLING UNIT - SUPPLY AHU-1/2-S	1
	SPARE		-		20	41	42		696		H		

TOTAL LOAD:	3,980	4,300	TOTAL LOAD:	4,892	4,872
COMBINED LOAD:	8,872	9,172	CONNECTED LOAD: 18,044	DEMAND LOAD:	16,911
				DEMAND AMPS:	70

Load Type Key		Demand Factor	Connected Load	Demand Load
R	General Purpose Receptacle	100% First 10kVA, 50% thereafter	6,060	6,060
L	Lighting	125% Load	4,400	5,500
M1	Largest Motor	125% Load	400	500
M	Motor	100% Load	2,000	2,000
A	Appliance	60% Load	0	0
H	HVAC	55% Load	5,184	2,851
K	Kitchen	XX% Load	0	0
E	Equipment	100% Load	0	0
T	Transformer	100% Load	0	0
W	Welder	100% Load	0	0
RV	Recreational Vehicle	XX% Load	0	0

XX - Units of Equipment - See NEC Table 220.56

XX - RV Sites - See NEC Table 551.71 (A)

NOTES:
1. PROVIDE NEW BREAKER IN EXISTING SPACE. FIELD VERIFY AIC RATING WITH EXISTING BREAKERS PRIOR TO ORDERING. MATCH EXISTING RATING.

Landis Consulting
ENGINEERING SERVICES
Salem | Lake Oswego
503-584-1576
www.landisconsulting.com

REGISTERED PROFESSIONAL ENGINEER
86683
Digital Signature
OREGON
MAY 08, 2012
BENJAMIN E. FOSBRY
EXPIRES: 12-31-2020

Date: 10-21-2020 | BID SET
Proj No: 10064
Drawn By: SR
Chkd By: BEP
DSGN By: BEP
Acad File:

SUNRISE ELEMENTARY SCHOOL
MECHANICAL EQUIPMENT REPLACEMENT - PHASE I
730 SE 19TH AVE
ALBANY OREGON 97322

PANEL SCHEDULES

MFIA INC.
Consulting Engineers
2007 S.E. Ash St.
Portland, OR 97214
PHN: (503) 234-0548
FAX: (503) 234-0677
WWW.MFIA-ENG.COM

SHEET
E6.2
OF

PANEL NAME: H
VOLT/PHASE: 120/240V, 1Ø
NUM. POLES: 42
AIC RATING: 10,000
NOTES: EXISTING PANEL
REF. KEY NOTE #:

LOCATION: CORRIDOR
FED FROM: XXX
BREAKER MOUNTING: BOLTED
MAIN BREAKER AMPS: 200
BUS RATING AMPS: 225
SPD: NO

NOTES	LOAD DESCRIPTION	LOAD TYPE	VA L1	VA L2	TRIP RATING AMPS	CIRCUIT NUMBER	CIRCUIT NUMBER	TRIP RATING AMPS	VA L1	VA L2	LOAD TYPE	LOAD DESCRIPTION	NOTES
	PLUG MOLD RM. 13	R	1,200		20	42	41	20	1,200		R	UNKNOWN LOAD	
	UNKNOWN LOAD	R		1,200	20	40	39	20		750	M	FAN RM. 9, 12	
	UNKNOWN LOAD	R	1,200		20	38	37	20	750		M	FAN RM. 9, 12	
	HEATER FAN RM. 15, 16	M		1,500	20	36	35	20		750	M	FAN RM. 7, 8	
	LIGHTS RM. 10, 11	L	2,000		20	34	33	20	750		M	FAN RM. 7, 8	
	LIGHTS OVER HEAD	L		2,000	20	32	31	20		1,443	L	LIGHTS OVERHEAD	
	UNKNOWN LOAD	R	1,200		20	30	29	20	1,443		L	LIGHTS OVERHEAD	
	LIGHTS GIRLS TOILET	L		500	20	28	27	20		1,443	L	LIGHTS OVERHEAD	
	UNKNOWN LOAD	R	1,200		20	26	25	20	1,200		R	UNKNOWN LOAD	
	PLUG MOLD RM. 17, GFCI RM. 14	R		1,200	20	24	23	20		1,200	R	UNKNOWN LOAD	
	UNKNOWN LOAD	R	1,200		20	22	21	20	1,200		R	UNKNOWN LOAD	
	GFCI RM. 13	R		360	20	20	19	20		360	R	GFCI RM. 17	
	GFCI RM. 156, 16,, PLUG MOLD RM. 15, 16	R	1,200		20	18	17	20	1,200		R	UNKNOWN LOAD	
	UNKNOWN LOAD	R		1,200	20	16	15	20		1,200	R	UNKNOWN LOAD	
	UNKNOWN LOAD	R	1,200		20	14	13	20	1,200		R	PLUG MOLD RM. 14	
	UNKNOWN LOAD	R		1,200	20	12	11	20		1,200	R	UNKNOWN LOAD	
	UNKNOWN LOAD	R	1,200		20	10	9	20	1,200		R	UNKNOWN LOAD	
1	AIR HANDLING UNIT - RETURN AHU-OFFICE/13-R	H		696	15	8	7	20		1,200	R	OFFICE	
		H	696			6	5	20	1,443		L	NURESE, BATH, OFFICE LIGHTS	
1	AIR HANDLING UNIT - SUPPLY AHU-OFFICE/13-S	H		696	15	4	3	30		-		UNKNOWN LOAD	
		H	696			2	1		-				

TOTAL LOAD:	12,992	10,552	TOTAL LOAD:	11,586	9,546
COMBINED LOAD:	24,578	20,098	CONNECTED LOAD: 44,676	DEMAND LOAD:	37,431
				DEMAND AMPS:	156

Load Type Key		Demand Factor	Connected Load	Demand Load
R	General Purpose Receptacle	100% First 10kVA, 50% thereafter	27,120	18,560
L	Lighting	125% Load	10,272	12,840
M1	Largest Motor	125% Load	0	0
M	Motor	100% Load	4,500	4,500
A	Appliance	60% Load	0	0
H	HVAC	55% Load	2,784	1,531
K	Kitchen	XX% Load	0	0
E	Equipment	100% Load	0	0
T	Transformer	100% Load	0	0
W	Welder	100% Load	0	0
RV	Recreational Vehicle	XX% Load	0	0

XX - Units of Equipment - See NEC Table 220.56
XX - RV Sites - See NEC Table 551.71 (A)

NOTES:
1. NEW LOAD ON EXISTING PANEL. PROVIDE NEW BREAKER AND REPLACE EXISTING BREAKER. FIELD VERIFY AIC RATING WITH EXISTING BREAKERS PRIOR TO ORDERING. MATCH EXISTING RATING.

PANEL NAME: K
VOLT/PHASE: 120/240V, 1Ø
NUM. POLES: 42
AIC RATING: 10,000
NOTES: EXISTING PANEL
REF. KEY NOTE #:

LOCATION: 22
FED FROM: XXX
BREAKER MOUNTING: BOLTED
MAIN LUGS ONLY
BUS RATING AMPS: 225
SPD: NO

NOTES	LOAD DESCRIPTION	LOAD TYPE	VA L1	VA L2	TRIP RATING AMPS	CIRCUIT NUMBER	CIRCUIT NUMBER	TRIP RATING AMPS	VA L1	VA L2	LOAD TYPE	LOAD DESCRIPTION	NOTES
	KITCHEN PLUG NORTH WALL	R	180		20	1	16	20	720		R	KITCHEN PLUG EAST WALL	
	BATHROOM LIGHTS	L		120	20	2	17	20		720	R	KITCHEN PLUG EAST WALL	
	NEW RACH-IN REFERIGERATOR	R	1,600		20	3	18	20	500		L	KITCHEN LIGHTS	
	PORTABLE FOOD WARMER	R		500	20	4	19	20		500	L	KITCHEN LIGHTS	
	PLUGS	R	360		20	5	20	20	500		L	KITCHEN LIGHTS	
	KITCHEN PLUG WEST WALL	R		180	20	6	21	15		75	M	EXHAUST FAN EF-HEALTH	1
	KITCHEN PLUG WEST WALL	R	180		20	7	22	20	300		R	CONT OL	
	KITCHEN PLUG WEST WALL TRUE FREEZER	R		180	20	8	23	20		180	R	HALL RECEPTACLE FOR LUNCH COMPUTER	
	KITCHEN PLUG WEST WALL	R	180		20	9	24	20	-			SPARE	
	FIRE ALARM RELAY	R		600	20	10	25	20		1,200	R	NEW MIXER	
	-		-		20	11	26	20	1,200		R	NEW MIXER	
	ATTIC LIGHTS	L		160	20	12	27	15		372	M	EXHAUST FAN EF-REU-1	1
1	AIR HANDLING UNIT - RETURN AHU-9/10-R	H	696		15	13	28	20	2,750		A	WALK IN COMPRESSOR COOLER	
		H		696						2,750	A		
1	AIR HANDLING UNIT - RETURN AHU-CAFÉ-R	H	2,304		20	14	29	15	696		H	AIR HANDLING UNIT - RETURN AHU-ENTRY-R	1
		H		2,304						696	H		
1	AIR HANDLING UNIT - SUPPLY AHU-CAFÉ-S	H	2,304		20	15	30	15	696		H	AIR HANDLING UNIT -SUPPLY AHU-ENTRY-S	1
		H		2,304						696	H		
	SPARE		-		30		31	20	180		R	ROOFTOP RECEPTACLE	1
				-			32	15		696	H	AIR HANDLING UNIT - SUPPLY AHU-9/10-S	1
	SPACE		-		-	-			696		H		

TOTAL LOAD:	7,804	7,044	TOTAL LOAD:	8,238	7,885
COMBINED LOAD:	16,042	14,929	CONNECTED LOAD: 30,971	DEMAND LOAD:	22,563
				DEMAND AMPS:	94

Load Type Key		Demand Factor	Connected Load	Demand Load
R	General Purpose Receptacle	100% First 10kVA, 50% thereafter	8,460	8,460
L	Lighting	125% Load	1,780	2,225
M1	Largest Motor	125% Load	0	0
M	Motor	100% Load	447	447
A	Appliance	60% Load	5,500	3,300
H	HVAC	55% Load	14,784	8,131
K	Kitchen	XX% Load	0	0
E	Equipment	100% Load	0	0
T	Transformer	100% Load	0	0
W	Welder	100% Load	0	0
RV	Recreational Vehicle	XX% Load	0	0

XX - Units of Equipment - See NEC Table 220.56
XX - RV Sites - See NEC Table 551.71 (A)

NOTES:
1. NEW LOAD ON EXISTING PANEL. PROVIDE NEW BREAKER AS REQUIRED.

Landis Consulting
ENGINEERING SERVICES
Salem | Lake Oswego
503-584-1576
www.landisconsulting.com

REGISTERED PROFESSIONAL ENGINEER
86683
Digital Signature
OREGON
MAY 08, 2012
BENJAMIN E. FOSBRY
EXPIRES: 12-31-2020

Date: 10-21-2020 | BID SET
Proj No: 10054
Drawn By: SR
Chkd By: BEP
DSGN By: BEP
Acad File:

SUNRISE ELEMENTARY SCHOOL
MECHANICAL EQUIPMENT REPLACEMENT - PHASE I
730 SE 19TH AVE
ALBANY OREGON 97322

PANEL SCHEDULES

MFIA INC.
Consulting Engineers
2007 S.E. Ash St.
Portland, OR 97214
PHN: (503) 234-0548
FAX: (503) 234-0677
WWW.MFIA-ENG.COM

SHEET
E6.3
OF

PANEL NAME: M
VOLT/PHASE: 120/240V, 1Ø
NUM. POLES: 30
AIC RATING: 10,000
NOTES: EXISTING PANEL
REF. KEY NOTE #:

LOCATION: CORRIDOR
FED FROM: XXX
BREAKER MOUNTING: BOLTED
MAIN LUGS ONLY
BUS RATING AMPS: 225
SPD: NO

NOTES	LOAD DESCRIPTION	LOAD TYPE	VA L1	VA L2	TRIP RATING AMPS	CIRCUIT NUMBER	CIRCUIT NUMBER	TRIP RATING AMPS	VA L1	VA L2	LOAD TYPE	LOAD DESCRIPTION	NOTES
	LIBRARY	L	440		20	1	2	20	900		R	COMPUTER RECEPTACLE, LIBRARY	
	LIBRARY	L		440	20	3	4	20		900	R	RECEPTACLE LIBRARY	
	LIBRARY	L	440		20	5	6	20	900		R	FLOOR RECEPTACLE LIBRARY	
	LIBRARY	L		440	20	7	8	20		600	H	HVAC CONTROL	
	SPECIAL ED ROOM	L	440		20	9	10	20	900		R	WATER PIPE HEAT, DRINKING FOUNTAIN	
	OFFICE, WORK RM, CORRIDOR, OUSIDE DOORS	R		900	20	11	12	20		440	R	HEAT, PLAY SHED	
	RECEPTACLE, CORRIDOR	R	540		20	13	14	20	440		L	LIGHTS PLAY SHED	
	RECEPTACLE SPECIAL ED RM.	R		900	20	15	16	20		440	L	MV FLOOD	
	RECEPTACLE, OFFICE , WORK RM.	R	900		20	17	18	20	440		L	LIGHTS PLAY SHED	
	COMPUTER RECEPTACLE, OFFICE WORK RM.	R		900	-	19	20	15		440	L	LIGHTS PLAY SHED	
1	AIR HANDLING UNIT - RETURN AHU-LIBRARY-R	H	696		15	21	22	15	440		L	LIGHTS PLAY SHED	
		H		696		23	24	15		440	L	NIGHTS LIGHTS PLAY SHED	
1	AIR HANDLING UNIT -SUPPLY AHU-LIBRARY-S	H	696		15	25	26	15	600		M	DOOR, PLAY SHED, SUMP PUMP	
		H		696		27	28	20		180	R	ROOF TOP RECEPTACLE	1
	SPACE		-		-	29	30	-	-			SPACE	

TOTAL LOAD:	4,152	4,972	TOTAL LOAD:	4,620	3,440
COMBINED LOAD:	8,772	8,412	CONNECTED LOAD: 17,184	DEMAND LOAD:	16,871
				DEMAND AMPS:	70

Load Type Key		Demand Factor	Connected Load	Demand Load
R	General Purpose Receptacle	100% First 10kVA, 50% thereafter	8,360	8,360
L	Lighting	125% Load	4,840	6,050
M1	Largest Motor	125% Load	0	0
M	Motor	100% Load	600	600
A	Appliance	60% Load	0	0
H	HVAC	55% Load	3,384	1,861
K	Kitchen	XX% Load	0	0
E	Equipment	100% Load	0	0
T	Transformer	100% Load	0	0
W	Welder	100% Load	0	0
RV	Recreational Vehicle	XX% Load	0	0

XX - Units of Equipment - See NEC Table 220.56

XX - RV Sites - See NEC Table 551.71 (A)

NOTES:
1. NEW LOAD ON EXISTING PANEL. PROVIDE NEW BREAKER IN EXISTING SPACE. FIELD VERIFY AIC RATING WITH EXISTING BREAKERS PRIOR TO ORDERING. MATCH EXISTING RATING.

PANEL NAME: S
VOLT/PHASE: 120/240V, 1Ø
NUM. POLES: 36
AIC RATING: 42,000
NOTES: EXISTING PANEL
REF. KEY NOTE #:

LOCATION: SUB DISTRIBUTION PANEL
FED FROM: SUBDISTRIBUTION PANEL
BREAKER MOUNTING: BOLTED
MAIN LUGS ONLY
BUS RATING AMPS: 400
SPD: NO

NOTES	LOAD DESCRIPTION	LOAD TYPE	VA L1	VA L2	TRIP RATING AMPS	CIRCUIT NUMBER	CIRCUIT NUMBER	TRIP RATING AMPS	VA L1	VA L2	LOAD TYPE	LOAD DESCRIPTION	NOTES
	GYM	T	1,000		100	1	2	100	2,000		T	TEACHERS LOUNGE PANEL DD	
		T		1,000		3	4			2,000	T		
	OUTSIDE 50A REC.	H	600		50	5	6	35	-			UNKNOWN LOAD	
		H		6,000		7	8			-			
1	PUMP RP-1	H	372		15	9	10	20	1,020		M	PUMP BP-1	1
1	PUMP CP-1	H		735	15	11	12			1,020	M		
		H	735			13	14	20	1,020		M	PUMP BP-2	1
1	PUMP CP-2	H		735	15	15	16			1,020	M		
		H	735			17	18	20	-		L	ROOM LIGHTS	
1	PUMP CP-3	H		735	15	19	20	20		200	A	WATER HEATER WH-1	1
		H	735			21	22	20	-			UNKNOWN LOAD	
	UNKNOWN LOAD			-	15	23	24	20		460	H	LIBRARY HEAT	
	JOHNSON BROWN UNIT	H	700		15	25	26		460		H		
	JOHNSON GREY UNIT	H		700	15	27	28	20		800	H	BOILER B-1, B-2, B-3, B-4 (FUTURE)	1
1	AIR HANDLING UNIT - RETURN AHU-14/17-R	H	696		15	29	30	70	8,208		H	AIR HANDLING UNIT - SUPPLY AHU-GYM-R	1
		H		696		31	32			8,208	H		
1	AIR HANDLING UNIT - SUPPLY AHU-14/17-S	H	696		15	33	34	70	8,208		H	AIR HANDLING UNIT - SUPPLY AHU-GYM-S	1
		H		696		35	36			8,208	H		

TOTAL LOAD:	6,269	11,297	TOTAL LOAD:	20,916	21,916
COMBINED LOAD:	27,185	33,213	CONNECTED LOAD: 60,398	DEMAND LOAD:	37,765
				DEMAND AMPS:	157

Load Type Key		Demand Factor	Connected Load	Demand Load
R	General Purpose Receptacle	100% First 10kVA, 50% thereafter	0	0
L	Lighting	125% Load	0	0
M1	Largest Motor	125% Load	0	0
M	Motor	100% Load	4,080	4,080
A	Appliance	60% Load	200	120
H	HVAC	55% Load	50,118	27,565
K	Kitchen	XX% Load	0	0
E	Equipment	100% Load	0	0
T	Transformer	100% Load	6,000	6,000
W	Welder	100% Load	0	0
RV	Recreational Vehicle	XX% Load	0	0

XX - Units of Equipment - See NEC Table 220.56

XX - RV Sites - See NEC Table 551.71 (A)

NOTES:
1. NEW LOAD ON EXISTING PANEL. PROVIDE NEW BREAKER AND REPLACE EXISTING BREAKER.

Landis Consulting
ENGINEERING SERVICES
Salem | Lake Oswego
503-584-1576
www.landisconsulting.com

REGISTERED PROFESSIONAL ENGINEER
86683
Digital Signature
OREGON
MAY 08, 2012
BENJAMIN E. PERRY
EXPIRES: 12-31-2020

Date: 10-21-2020 BID SET
Proj No: 10064
Drawn By: SR
Chkd By: BEP
DSGN By: BEP
Acad File:

SUNRISE ELEMENTARY SCHOOL
MECHANICAL EQUIPMENT REPLACEMENT - PHASE I
730 SE 19TH AVE
ALBANY OREGON 97322

PANEL SCHEDULES

MEIA INC.
Consulting Engineers
2007 S.E. Ash St.
Portland, OR 97214
PHN: (503) 234-0546
FAX: (503) 234-0677
WWW.MPIA-ENG.COM

SHEET
E6.4
OF

PANEL NAME: N
VOLT/PHASE: 120/240V, 1Ø
NUM. POLES: 42
AIC RATING: 42,000
NOTES: EXISTING PANEL
REF. KEY NOTE #:

LOCATION: 28
FED FROM: MDP (MAIN DISTRIBUTION PANEL)
BREAKER MOUNTING: BOLTED
MAIN BREAKER AMPS:
BUS RATING AMPS: 225
SPD: NO

NOTES	LOAD DESCRIPTION	LOAD TYPE	VA L1	VA L2	TRIP RATING AMPS	CIRCUIT NUMBER	CIRCUIT NUMBER	TRIP RATING AMPS	VA L1	VA L2	LOAD TYPE	LOAD DESCRIPTION	NOTES
	LIGHTS RM. 21	L	440		15	1	2	15	600		M	RESTROOM FANS, CONTROLS	
	LIGHTS RM. 21	L		440	15	3	4	15		600	H	UV RM. 18	
	LIGHTS RM. 21	L	440		15	5	6	15	600		H	UV RM. 21	
	LIGHTS RM. 20	L		440	15	7	8	20		600	H	UV RM. 19	
	LIGHTS RM. 20	L	440		20	9	10	20	600		M	EXHAUST FANS	
	LIGHTS RM. 19	L		440	20	11	12	20		600	M	EXHAUST FANS	
	LIGHTS RM. 19	L	440		20	13	14	20	-			SPARE	
	LIGHTS RM. 18	L		440	20	15	16	20		-		SPARE	
	LIGHTS RM. 18	L	440		20	17	18	20	880		L	OUTSIDE LIGHTS, \ CLOCK TIMER FOR IB	
	CONSELORS RM., BOYS, GIRLS LIGHTS	L		880	20	19	20	20		600	H	HEATERS RM. 31	
	SPARE		-		20	21	22		600		H		
	PLUGS RM. 20	R		540	20	23	24	20		360	L	PLUGS, LIGHTS RM. STORAGE	
	PLUGS RM.. 21	R	540		20	25	26	20	-			SPARE	
	HALLWAY PLUG	R		540	20	27	28	20		600	H	HEATER STORAGE RM.	
	PLUGS RM. 19	R	360		20	29	30		600		H		
	PLUGS RM. 18	R		360	20	31	32	20		900	R	COMPUTER RECEPTACLE RM. 20	
	SPARE		-		20	33	34	20	900		R	COMPUTER RECEPTACLE RM. 21	
	PLUGS COUNSELORS, HALL RM.	R		360	20	35	36	20		-		SPARE	
	SPARE		-		20	37	38	20	-			SPARE	
	SPARE			-	15	39	40	60		6,072	T	SUB FEED PANEL N1	1
			-			41	42		7,152		T		

TOTAL LOAD:	3,100	4,440	TOTAL LOAD:	11,932	10,332
COMBINED LOAD:	15,032	14,772	CONNECTED LOAD: 29,804	DEMAND LOAD:	29,434
				DEMAND AMPS:	123

Load Type Key		Demand Factor	Connected Load	Demand Load	
R	General Purpose Receptacle	100% First 10kVA, 50% thereafter	4,500	4,500	
L	Lighting	125% Load	6,080	7,600	
M1	Largest Motor	125% Load	0	0	
M	Motor	100% Load	1,800	1,800	
A	Appliance	60% Load	0	0	
H	HVAC	55% Load	4,200	2,310	
K	Kitchen	XX% Load	0	0	XX - Units of Equipment - See NEC Table 220.56
E	Equipment	100% Load	0	0	
T	Transformer	100% Load	13,224	13,224	
W	Welder	100% Load	0	0	
RV	Recreational Vehicle	XX% Load	0	0	XX - RV Sites - See NEC Table 551.71 (A)

NOTES:.
1. PROVIDE NEW BREAKER IN EXISTING SPACE. FIELD VERIFY AIC RATING WITH EXISTING BREAKERS PRIOR TO ORDERING. MATCH EXISTING RATING.

PANEL NAME: N1
VOLT/PHASE: 120/240V, 1Ø
NUM. POLES: 18
AIC RATING: 10,000
NOTES: EXISTING PANEL
REF. KEY NOTE #:

LOCATION: ELECT 22
FED FROM: PANEL N
BREAKER MOUNTING: BOLTED
MAIN LUGS ONLY
BUS RATING AMPS: 100
SPD: NO

NOTES	LOAD DESCRIPTION	LOAD TYPE	VA L1	VA L2	TRIP RATING AMPS	CIRCUIT NUMBER	CIRCUIT NUMBER	TRIP RATING AMPS	VA L1	VA L2	LOAD TYPE	LOAD DESCRIPTION	NOTES
	RECEPTACLE RM. 13	R	1,440		20	1	2	20	1,440		R	RECEPTACLE RM. 13	
	RECEPTACLE RM. 14	R		1,440	20	3	4	20		1,440	R	RECEPTACLE RM. 13	
	RECEPTACLE RM. 15	R	1,440		20	5	6	-	-			SPACE	
	RECEPTACLE RM. 16	R		1,440	20	7	8	-		-		SPACE	
	RECEPTACLE RM. 17	R	1,440		20	9	10	-	-			SPACE	
	SPARE			-	15	11	12	15		696	H	AIR HANDLING UNIT - RETURN AHU-15/16-R	1
	SPARE		-		15	13	14		696		H		
1	ROOF TOP RECEPTACLES	R		360	20	15	16	15		696	H	AIR HANDLING UNIT - SUPPLY AHU-15/16-S	1
	SPACE		-		-	17	18		696		H		

TOTAL LOAD:	4,320	3,240	TOTAL LOAD:	2,832	2,832
COMBINED LOAD:	7,152	6,072	CONNECTED LOAD: 13,224	DEMAND LOAD:	11,751
				DEMAND AMPS:	49

Load Type Key		Demand Factor	Connected Load	Demand Load	
R	General Purpose Receptacle	100% First 10kVA, 50% thereafter	10,440	10,220	
L	Lighting	125% Load	0	0	
M1	Largest Motor	125% Load	0	0	
M	Motor	100% Load	0	0	
A	Appliance	60% Load	0	0	
H	HVAC	55% Load	2,784	1,531	
K	Kitchen	XX% Load	0	0	XX - Units of Equipment - See NEC Table 220.56
E	Equipment	100% Load	0	0	
T	Transformer	100% Load	0	0	
W	Welder	100% Load	0	0	
RV	Recreational Vehicle	XX% Load	0	0	XX - RV Sites - See NEC Table 551.71 (A)

NOTES:.
1. NEW LOAD ON EXISTING PANEL. PROVIDE NEW BREAKER IN EXISTING SPACE. FIELD VERIFY AIC RATING WITH EXISTING BREAKER PRIOR TO ORDERING. MATCH EXISTING RATING.

Landis Consulting
ENGINEERING SERVICES
Salem | Lake Oswego
503-584-1576
www.landisconsulting.com

REGISTERED PROFESSIONAL ENGINEER
86683
Digital Signature
OREGON
MAY 08, 2012
BENJAMIN E. PERRY
EXPIRES: 12-31-2020

Date: 10-21-2020 | BID SET
Proj No: 10064
Drawn By: SR
Chkd By: BEP
DSGN By: BEP
Acad File:

SUNRISE ELEMENTARY SCHOOL
MECHANICAL EQUIPMENT REPLACEMENT - PHASE I
730 SE 19TH AVE
ALBANY OREGON 97322

PANEL SCHEDULES

MFIA INC.

Consulting Engineers
2007 S.E. Ash St.
Portland, OR 97214
PHN: (503) 234-0548
FAX: (503) 234-0677
WWW.MFIA-ENG.COM

SHEET
E6.5
OF

Attachment A

PREVAILING WAGE RATES

for

Public Works Contracts in Oregon

PREVAILING WAGE RATES
for
Public Works Contracts in Oregon

Val Hoyle
Commissioner
Bureau of Labor & Industries

Effective: July 1, 2020

VAL HOYLE
Labor Commissioner

July 1, 2020

In January and July of each year, the Bureau of Labor & Industries publishes the prevailing wage rates (PWR) required to be paid to workers on non-residential public works projects in the state of Oregon. Updates are generally published in April and October.

A separate publication, entitled "*Definitions of Covered Occupations for Public Works Contracts in Oregon*," provides occupational definitions used to classify the duties performed on public works projects.

These publications are available electronically on the Bureau of Labor & Industries' website at www.oregon.gov/boli. Contracting agencies, contractors, and other interested parties on the agency's mailing list receive an email notification whenever the publications are amended. One complimentary hard copy of each PWR publication is available upon request by emailing us at pwremail@boli.state.or.us or by calling 971-673-0838. Additional copies are available at cost, plus postage.

Also available on the Bureau's website is a link to the federal Davis-Bacon rates. This link is posted in order to assist contractors and public agencies in determining which rates to pay on projects in Oregon subject to BOTH the state PWR and federal Davis-Bacon Act. The higher of the wage rates must be paid on such projects.

Unless specifically exempted by state law, prevailing wage rates are the minimum wages that must be paid to all workers employed on all public works. These rates are determined using data collected from a statewide construction industry wage survey of occupations and crafts performing commercial building and heavy and highway construction in 14 geographic regions of the state.

ORS 279C.830 requires that the applicable wage rates be incorporated into all bid specifications for public works contracts subject to the PWR law. A statement incorporating the applicable prevailing wage rate publication and any amendments thereto or Davis-Bacon wage rate determination into the specifications *by reference* will satisfy these requirements. Such reference must include the title of the applicable wage rates publication or determination and the date of the publication or determination as well as the date of any applicable amendments. A provision that prevailing wage rates must be paid must also appear in the contract.

Generally, the rates in effect at the time the bid specifications are first advertised are those that apply for the duration of the project. There are some exceptions to this rule. For example, if during the bidding process, the prevailing wage rates change, the public agency has the option of amending the bid specifications to reflect such changes. If a Construction Manager/General Contractor (CM/GC) is used on the project, the rates in effect at the time the CM/GC contract becomes a public works contract are the applicable rates to be used for the duration of the project. (See OAR 839-025-0020 for more information.) Note that the applicable rates for purposes of compliance with the federal Davis-Bacon Act may be different from the applicable rates for purposes of compliance with Oregon's prevailing wage rate laws. The effective federal rates will be those as determined under 29 CFR 1.6.

If you have any questions regarding application of the state PWR law or the applicable rates to be paid on any project, contact the Bureau of Labor and Industries's Prevailing Wage Coordinator in Portland at (971) 673-0839.

Val Hoyle
Commissioner
Bureau of Labor and Industries

TABLE OF CONTENTS

JULY 1, 2020

Forms necessary to comply with ORS 279C.800 through ORS 279C.870 may be found in the back of this booklet. Contractors are encouraged to use and keep on file the forms provided as master copies for use on future prevailing wage rate projects.

All of the information in this booklet can be accessed and printed from the Internet at: www.oregon.gov/BOLI

Pursuant to ORS 279C.800 to ORS 279C.870, the prevailing wage rates contained in this booklet have been adopted for use on public works contracts in Oregon. Additional copies of this booklet are available at cost, plus postage.

HOW TO LOOK UP A RATE

1. **When was the project first advertised for bid?**
   Generally, for purposes of compliance with Oregon's prevailing wage rate laws, the rates in effect at the time the bid specifications are first advertised are those that apply for the duration of the project. (See OAR 839-025-0020(8) for information about projects using a CM/GC.)

2. **What type of work is being performed by the employee?**
   Using the booklet, *Definitions of Covered Occupations*, find the definition that most closely matches the actual work performed by the worker. If you have any questions about work classifications, contact the Bureau of Labor & Industries at the number below.

3. **Where is the work being performed – what region?**
   Find the occupation in the correct region pages associated with the county where the project construction is taking place.

4. **Is there a rate listed next to the classification?**
   If so, use it. The prevailing wage rate is made up of an hourly base rate and an hourly fringe rate; it is the combination of these two amounts that must be paid to the worker.

5. **If the book directs you to "See Appendix," go to the back of the book and use the rate listed in the Appendix pages.** It may include a group number, shift differential, hazard pay and/or zone pay which are added to the hourly base rate.

6. **Apprentices** must be paid the full fringe rate in those regions where the appendix rate does not apply. However, if the book directs you to "See Appendix," and the worker is registered in a bona fide apprenticeship program, **you may contact the Bureau of Labor & Industries at (971) 673-0839** for the applicable hourly fringe rate.

7. **If you have questions, CALL us at (971) 673-0839.**

For specific information or questions regarding the prevailing wage law, you may obtain a "Prevailing Wage Rate Laws" handbook by contacting the nearest Bureau of Labor & Industries' office listed below. An order form is in the back of this booklet.

Oregon Bureau of Labor & Industries Office Locations

Eugene	1400 Executive Parkway, Suite 200 Eugene, OR 97401	(541) 686-7623
Portland	800 NE Oregon St., #1045 Portland, OR 97232	(971) 673-0761
Salem	3865 Wolverine St. NE, Bldg. E-1 Salem, OR 97305	(503) 378-3292

PUBLIC WORKS BONDS

EVERY CONTRACTOR AND SUBCONTRACTOR who works on public works projects subject to the prevailing wage rate (PWR) law is required to file a **$30,000 "PUBLIC WORKS BOND"** with the Construction Contractor's Board (CCB). (ORS 279C.836) This includes flagging and landscaping companies, temporary employment agencies, and sometimes sole proprietors.

- This bond is to be **USED EXCLUSIVELY FOR UNPAID WAGES** determined to be due by the Bureau of Labor & Industries.
- The bond **MUST** be filed **BEFORE STARTING WORK** on a prevailing wage rate project.
- The bond is in effect **CONTINUOUSLY** (do not have to have one per project).
- **BEFORE PERMITTING A SUBCONTRACTOR TO START WORK** on a public works project, **CONTRACTORS MUST VERIFY** their subcontractors either have filed the bond, or have elected not to file a public works bond due to a bona fide exemption.
- A public works bond is in addition to any other required bond the contractor or subcontractor is required to obtain.

Exemptions:

- Allowed for a disadvantaged business enterprise, a minority-owned business, woman-owned business, a business that a service-disabled veteran owns or an emerging small business certified under ORS 200.055, for the first FOUR years of certification;
    - Exempt contractor must still file written verification of certification with the CCB, and give the CCB written notice that they elect not to file a bond.
    - The prime contractor must give written notice to the public agency that they elect not to file a public works bond.
    - Subcontractors must give written notice to the prime contractor that they elect not to file a public works bond.
- For projects with a total project cost of $100,000 or less, a public works bond is not required. (Note this is the total project cost, not an individual contract amount.)
- Emergency projects, as defined in ORS 279A.010(f).

ORS 279C.830(2) requires:

That the **specifications** for every contract for public works shall contain a provision stating that the contractor and every subcontractor must have a public works bond filed with the CCB before starting work on the project, unless otherwise exempt.

Every contract awarded by a contracting agency shall contain a provision requiring the contractor:

- To have a public works bond filed with the CCB before starting work on the project, unless otherwise exempt;
- To include in every subcontract a provision requiring the subcontractor to have a public works bond filed with the CCB before starting work on the project unless otherwise exempt.

Every subcontract that a contractor or subcontractor awards in connection with a public works contract must require any subcontractor to have a public works bond filed with the Construction Contractors Board before starting work on the public works project, unless otherwise exempt.

PWR SURVEY WAGE RATE APPEAL PROCESS

1) Anyone wishing to challenge or appeal a survey rate determination should submit their request in writing to the commissioner.

2) The appeal should include:
   a) a complete description of the “problem,” including the affected trade(s), and documentation or evidence (if available) supporting why the rate determination is incorrect
   b) recommendations for how the rate could be more accurately determined.

3) The written appeal will be reviewed by the Wage and Hour Division which will recommend to the commissioner a course of action and proposed time frame for addressing the issue (such as a recommendation that further information be obtained, an investigation or study of the matter be conducted, a rate amendment or correction be issued, the next survey be modified, etc.).

4) The commissioner will review the division’s recommendation and either approve, disapprove or modify the recommendation. (The PWR Advisory Committee may be consulted in some matters as deemed appropriate by the commissioner.)

5) The requesting party will be notified of the commissioner’s decision.

PWR REQUIRED POSTINGS

ALL CONTRACTORS AND SUBCONTRACTORS

PREVAILING WAGE RATES

Each and every contractor and subcontractor engaged in work on a public works must post the applicable prevailing wage rates for that project in a conspicuous place at the work site so workers have ready access to the information. ORS 279C.840(4); OAR 839-025-0033(1).

DETAILS OF FRINGE BENEFIT PROGRAMS

When a contractor or subcontractor provides for or contributes to a health and welfare plan or a pension plan, or both, for the contractor or subcontractor's employees who are working on a public works project, the details of all fringe benefit plans or programs must be posted on the work site. The posting must include a description of the plan or plans, information about how and where claims can be made and where to obtain more information. The notice must be posted in a conspicuous place at the work site in the same location as the prevailing wage rates (see above). ORS 279C.840(5); OAR 839-025-0033(2)

WORK SCHEDULE

Contractors and subcontractors must give workers the regular work schedule (days of the week and number of hours per day) in writing, before beginning work on the project. Contractors and subcontractors may provide the schedule at the time of hire, prior to starting work on the contract, or by posting the schedule in a location frequented by employees, along with the prevailing wage rate information and any fringe benefit information. If an employer fails to give written notice of the worker's schedule, the work schedule will be presumed to be a five-day schedule. The schedule may only be changed if the change is intended to be permanent and is not designed to evade the PWR overtime requirements. ORS 279C.540(2); OAR 839-025-0034.

PREVAILING WAGE RATES

OCCUPATIONS
BY
REGIONS

PREVAILING WAGE RATE
REGIONS

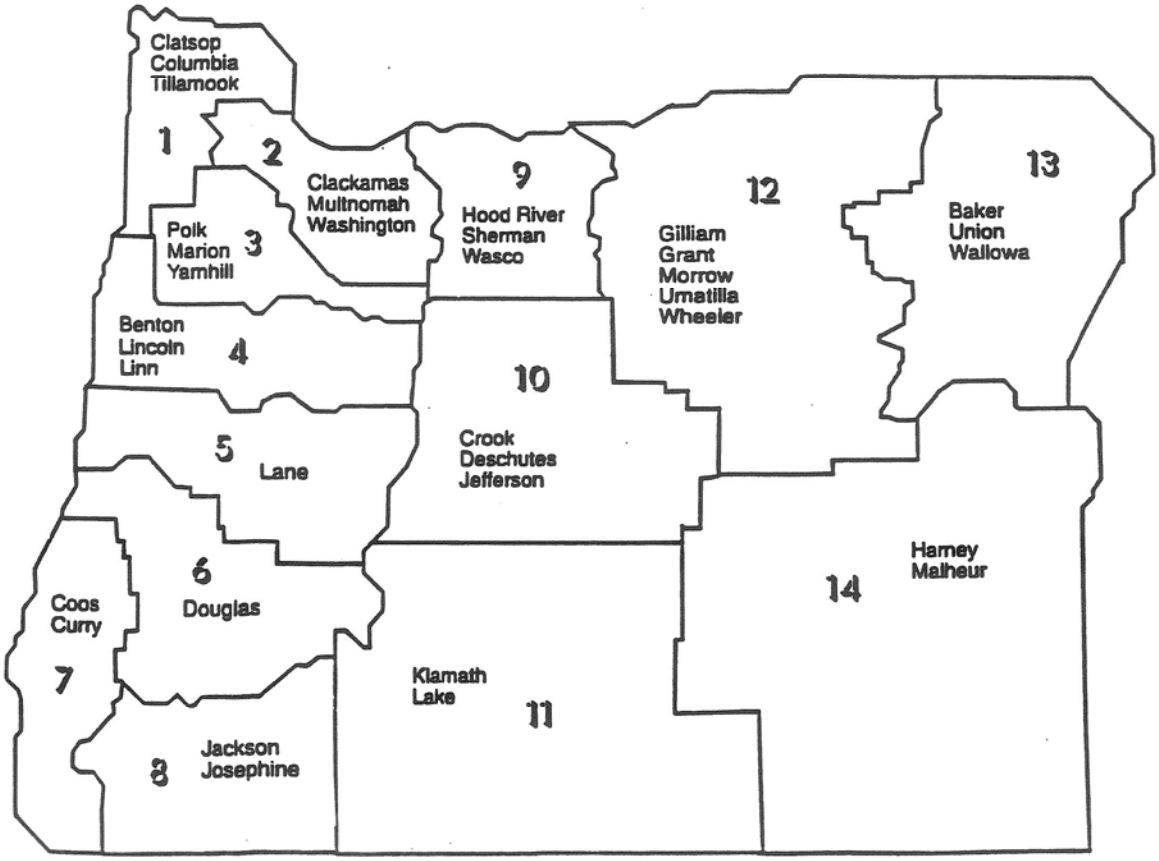

Using the booklet, Definitions of Covered Occupations, find the definition that most closely matches the actual work being performed by the worker.

OCCUPATION	BASIC HOURLY RATE	FRINGE RATE
Asbestos Worker/Insulator	See Appendix	See Appendix
Boilermaker	See Appendix	See Appendix
Bricklayer/Stonemason	See Appendix	See Appendix
Bridge and Highway Carpenter (See Carpenter Group 5)	See Appendix	See Appendix
Carpenter Group 1 & 2	See Appendix	See Appendix
Cement Mason	See Appendix	See Appendix
Diver	See Appendix	See Appendix
Diver Tender	See Appendix	See Appendix
Dredger	See Appendix	See Appendix
Drywall, Lather, Acoustical Carpenter & Ceiling Installer	See Appendix	See Appendix
Drywall Taper (See Painter & Drywall Taper)	See Appendix	See Appendix
Electrician	See Appendix	See Appendix
Elevator Constructor, Installer and Mechanic	See Appendix	See Appendix
Fence Constructor (Non-metal)	$27.22	$10.76
Fence Erector (Metal)	$20.50	$5.09
Flagger (See Laborer Group 3)	See Appendix	See Appendix
Glazier	See Appendix	See Appendix
Hazardous Materials Handler/Mechanic	$21.25	$9.31
Highway and Parking Striper	$26.11	$8.20
Ironworker	$35.94	$23.35
Laborer Group 1	See Appendix	See Appendix
Laborer Group 2	See Appendix	See Appendix
Laborer Group 3	See Appendix	See Appendix
Landscape Laborer/Technician	$19.74	$4.77
Limited Energy Electrician	$31.64	$10.26
Line Constructor	See Appendix	See Appendix
Marble Setter	$34.28	$19.08
Millwright Group 1 & 2 (See Carpenter Group 3 & 4)	See Appendix	See Appendix
Painter	$23.45	$8.63
Piledriver (See Carpenter Group 6)	See Appendix	See Appendix
Plasterer and Stucco Mason	$29.70	$16.91
Plumber/Pipefitter/Steamfitter	See Appendix	See Appendix
Power Equipment Operator Group 1	See Appendix	See Appendix
Power Equipment Operator Group 1A	See Appendix	See Appendix
Power Equipment Operator Group 1B	See Appendix	See Appendix
Power Equipment Operator Group 2	See Appendix	See Appendix
Power Equipment Operator Group 3	See Appendix	See Appendix
Power Equipment Operator Group 4	See Appendix	See Appendix
Power Equipment Operator Group 5	See Appendix	See Appendix
Power Equipment Operator Group 6	See Appendix	See Appendix

Using the booklet, Definitions of Covered Occupations, find the definition that most closely matches the actual work being performed by the worker.

OCCUPATION	BASIC HOURLY RATE	FRINGE RATE
Roofer	$26.78	$11.38
Sheet Metal Worker	See Appendix	See Appendix
Soft Floor Layer	See Appendix	See Appendix
Sprinkler Fitter	See Appendix	See Appendix
Tender to Mason Trades (Brick and Stonemason, Mortar Mixer, Hod Carrier)	See Appendix	See Appendix
Tender to Plasterer and Stucco Mason	$26.12	$12.29
Testing, Adjusting, and Balancing (TAB) Technician	See Appendix	See Appendix
Tilesetter/Terrazzo Worker: Hard Tilesetter	See Appendix	See Appendix
Tile, Terrazzo, and Marble Finisher	See Appendix	See Appendix
Truck Driver – All Groups	$23.45	$5.99

Using the booklet, Definitions of Covered Occupations, find the definition that most closely matches the actual work being performed by the worker.

OCCUPATION	BASIC HOURLY RATE	FRINGE RATE
Asbestos Worker/Insulator	See Appendix	See Appendix
Boilermaker	$38.43	$23.09
Bricklayer/Stonemason	See Appendix	See Appendix
Bridge & Highway Carpenter	$36.47	$15.41
Carpenter Group 1 & 2	See Appendix	See Appendix
Cement Mason	See Appendix	See Appendix
Diver	See Appendix	See Appendix
Diver Tender	See Appendix	See Appendix
Dredger	$42.22	$14.33
Drywall, Lather, Acoustical Carpenter & Ceiling Installer	See Appendix	See Appendix
Drywall Taper (See Painter & Drywall Taper)	See Appendix	See Appendix
Electrician	See Appendix	See Appendix
Elevator Constructor, Installer and Mechanic	See Appendix	See Appendix
Fence Constructor (Non-metal)	$27.22	$10.76
Fence Erector (Metal)	$20.50	$5.09
Flagger (See Laborer Group 3)	See Appendix	See Appendix
Glazier	See Appendix	See Appendix
Hazardous Materials Handler/Mechanic	$21.25	$9.31
Highway and Parking Striper	$26.11	$8.20
Ironworker	See Appendix	See Appendix
Laborer Group 1	See Appendix	See Appendix
Laborer Group 2	See Appendix	See Appendix
Laborer Group 3	See Appendix	See Appendix
Landscape Laborer/Technician	$19.74	$4.77
Limited Energy Electrician	$31.64	$10.26
Line Constructor	See Appendix	See Appendix
Marble Setter	See Appendix	See Appendix
Millwright Group 1 & 2	$29.32	$10.68
Painter	$23.45	$8.63
Piledriver (See Carpenter Group 6)	See Appendix	See Appendix
Plasterer and Stucco Mason	See Appendix	See Appendix
Plumber/Pipefitter/Steamfitter	See Appendix	See Appendix
Power Equipment Operator Group 1	See Appendix	See Appendix
Power Equipment Operator Group 1A	See Appendix	See Appendix
Power Equipment Operator Group 1B	See Appendix	See Appendix
Power Equipment Operator Group 2	See Appendix	See Appendix
Power Equipment Operator Group 3	See Appendix	See Appendix
Power Equipment Operator Group 4	See Appendix	See Appendix
Power Equipment Operator Group 5	See Appendix	See Appendix
Power Equipment Operator Group 6	See Appendix	See Appendix

Using the booklet, Definitions of Covered Occupations, find the definition that most closely matches the actual work being performed by the worker.

OCCUPATION	BASIC HOURLY RATE	FRINGE RATE
Roofer	See Appendix	See Appendix
Sheet Metal Worker	See Appendix	See Appendix
Soft Floor Layer	See Appendix	See Appendix
Sprinkler Fitter	See Appendix	See Appendix
Tender to Mason Trades (Brick and Stonemason, Mortar Mixer, Hod Carrier)	See Appendix	See Appendix
Tender to Plasterer and Stucco Mason	See Appendix	See Appendix
Testing, Adjusting, and Balancing (TAB) Technician	$34.14	$13.04
Tilesetter/Terrazzo Worker: Hard Tilesetter	See Appendix	See Appendix
Tile, Terrazzo, and Marble Finisher	See Appendix	See Appendix
Truck Driver – All Groups	$23.45	$5.99

Using the booklet, Definitions of Covered Occupations, find the definition that most closely matches the actual work being performed by the worker.

OCCUPATION	BASIC HOURLY RATE	FRINGE RATE
Asbestos Worker/Insulator	See Appendix	See Appendix
Boilermaker	$38.43	$23.09
Bricklayer/Stonemason	See Appendix	See Appendix
Bridge and Highway Carpenter (See Carpenter Group 5)	See Appendix	See Appendix
Carpenter Group 1 & 2	See Appendix	See Appendix
Cement Mason	See Appendix	See Appendix
Diver	See Appendix	See Appendix
Diver Tender	See Appendix	See Appendix
Dredger	See Appendix	See Appendix
Drywall, Lather, Acoustical Carpenter & Ceiling Installer	See Appendix	See Appendix
Drywall Taper (See Painter & Drywall Taper)	See Appendix	See Appendix
Electrician	See Appendix	See Appendix
Elevator Constructor, Installer and Mechanic	See Appendix	See Appendix
Fence Constructor (Non-metal)	$27.22	$10.76
Fence Erector (Metal)	$20.50	$5.09
Flagger (See Laborer Group 3)	See Appendix	See Appendix
Glazier	See Appendix	See Appendix
Hazardous Materials Handler/Mechanic	$21.25	$9.31
Highway and Parking Striper	$26.11	$8.20
Ironworker	$35.94	$23.35
Laborer Group 1	See Appendix	See Appendix
Laborer Group 2	See Appendix	See Appendix
Laborer Group 3	See Appendix	See Appendix
Landscape Laborer/Technician	$19.74	$4.77
Limited Energy Electrician	$31.64	$10.26
Line Constructor	See Appendix	See Appendix
Marble Setter	$34.28	$19.08
Millwright Group 1 & 2	$29.32	$10.68
Painter	$23.45	$8.63
Piledriver (See Carpenter Group 6)	See Appendix	See Appendix
Plasterer and Stucco Mason	See Appendix	See Appendix
Plumber/Pipefitter/Steamfitter	See Appendix	See Appendix
Power Equipment Operator Group 1	See Appendix	See Appendix
Power Equipment Operator Group 1A	See Appendix	See Appendix
Power Equipment Operator Group 1B	See Appendix	See Appendix
Power Equipment Operator Group 2	See Appendix	See Appendix
Power Equipment Operator Group 3	See Appendix	See Appendix
Power Equipment Operator Group 4	See Appendix	See Appendix
Power Equipment Operator Group 5	See Appendix	See Appendix
Power Equipment Operator Group 6	See Appendix	See Appendix

Using the booklet, Definitions of Covered Occupations, find the definition that most closely matches the actual work being performed by the worker.

OCCUPATION	BASIC HOURLY RATE	FRINGE RATE
Roofer	See Appendix	See Appendix
Sheet Metal Worker	$35.09	$14.53
Soft Floor Layer	See Appendix	See Appendix
Sprinkler Fitter	See Appendix	See Appendix
Tender to Mason Trades (Brick and Stonemason, Mortar Mixer, Hod Carrier)	See Appendix	See Appendix
Tender to Plasterer and Stucco Mason	$26.12	$12.29
Testing, Adjusting, and Balancing (TAB) Technician	See Appendix	See Appendix
Tilesetter/Terrazzo Worker: Hard Tilesetter	See Appendix	See Appendix
Tile, Terrazzo, and Marble Finisher	See Appendix	See Appendix
Truck Driver – All Groups	$23.45	$5.99

Using the booklet, Definitions of Covered Occupations, find the definition that most closely matches the actual work being performed by the worker.

OCCUPATION	BASIC HOURLY RATE	FRINGE RATE
Asbestos Worker/Insulator	See Appendix	See Appendix
Boilermaker	See Appendix	See Appendix
Bricklayer/Stonemason	See Appendix	See Appendix
Bridge and Highway Carpenter (See Carpenter Group 5)	See Appendix	See Appendix
Carpenter Group 1 & 2	See Appendix	See Appendix
Cement Mason	See Appendix	See Appendix
Diver	See Appendix	See Appendix
Diver Tender	See Appendix	See Appendix
Dredger	$42.22	$14.33
Drywall, Lather, Acoustical Carpenter & Ceiling Installer	See Appendix	See Appendix
Drywall Taper (See Painter & Drywall Taper)	See Appendix	See Appendix
Electrician	See Appendix	See Appendix
Elevator Constructor, Installer and Mechanic	See Appendix	See Appendix
Fence Constructor (Non-metal)	$27.22	$10.76
Fence Erector (Metal)	$20.50	$5.09
Flagger (See Labor Group 3)	See Appendix	See Appendix
Glazier	See Appendix	See Appendix
Hazardous Materials Handler/Mechanic	$21.25	$9.31
Highway and Parking Striper	$26.11	$8.20
Ironworker	$35.94	$23.35
Laborer Group 1	See Appendix	See Appendix
Laborer Group 2	See Appendix	See Appendix
Laborer Group 3	See Appendix	See Appendix
Landscape Laborer/Technician	$19.74	$4.77
Limited Energy Electrician	$31.64	$10.26
Line Constructor	$45.93	$16.25
Marble Setter	See Appendix	See Appendix
Millwright Group 1 & 2	$29.32	$10.68
Painter	$23.45	$8.63
Piledriver	$39.47	$16.65
Plasterer and Stucco Mason	See Appendix	See Appendix
Plumber/Pipefitter/Steamfitter	See Appendix	See Appendix
Power Equipment Operator Group 1	See Appendix	See Appendix
Power Equipment Operator Group 1A	See Appendix	See Appendix
Power Equipment Operator Group 1B	See Appendix	See Appendix
Power Equipment Operator Group 2	See Appendix	See Appendix
Power Equipment Operator Group 3	See Appendix	See Appendix
Power Equipment Operator Group 4	See Appendix	See Appendix
Power Equipment Operator Group 5	See Appendix	See Appendix
Power Equipment Operator Group 6	See Appendix	See Appendix

Using the booklet, Definitions of Covered Occupations, find the definition that most closely matches the actual work being performed by the worker.

OCCUPATION	BASIC HOURLY RATE	FRINGE RATE
Roofer	$26.78	$11.38
Sheet Metal Worker	$35.09	$14.53
Soft Floor Layer	See Appendix	See Appendix
Sprinkler Fitter	$37.15	$16.68
Tender to Mason Trades (Brick and Stonemason, Mortar Mixer, Hod Carrier)	See Appendix	See Appendix
Tender to Plasterer and Stucco Mason	$26.12	$12.29
Testing, Adjusting, and Balancing (TAB) Technician	$34.14	$13.04
Tilesetter/Terrazzo Worker: Hard Tilesetter	See Appendix	See Appendix
Tile, Terrazzo, and Marble Finisher	See Appendix	See Appendix
Truck Driver – All Groups	$23.45	$5.99

Using the booklet, Definitions of Covered Occupations, find the definition that most closely matches the actual work being performed by the worker.

OCCUPATION	BASIC HOURLY RATE	FRINGE RATE
Asbestos Worker/Insulator	See Appendix	See Appendix
Boilermaker	See Appendix	See Appendix
Bricklayer/Stonemason	See Appendix	See Appendix
Bridge and Highway Carpenter	$36.47	$15.41
Carpenter Group 1 & 2	See Appendix	See Appendix
Cement Mason	See Appendix	See Appendix
Diver	See Appendix	See Appendix
Diver Tender	See Appendix	See Appendix
Dredger	See Appendix	See Appendix
Drywall, Lather, Acoustical Carpenter & Ceiling Installer	See Appendix	See Appendix
Drywall Taper (See Painter & Drywall Taper)	See Appendix	See Appendix
Electrician	See Appendix	See Appendix
Elevator Constructor, Installer and Mechanic	See Appendix	See Appendix
Fence Constructor (Non-metal)	$27.22	$10.76
Fence Erector (Metal)	$20.50	$5.09
Flagger (See Laborer Group 3)	See Appendix	See Appendix
Glazier	See Appendix	See Appendix
Hazardous Materials Handler/Mechanic	$21.25	$9.31
Highway and Parking Striper	$26.11	$8.20
Ironworker	See Appendix	See Appendix
Laborer Group 1	See Appendix	See Appendix
Laborer Group 2	See Appendix	See Appendix
Laborer Group 3	See Appendix	See Appendix
Landscape Laborer/Technician	$19.74	$4.77
Limited Energy Electrician	$31.64	$10.26
Line Constructor	See Appendix	See Appendix
Marble Setter	See Appendix	See Appendix
Millwright Group 1 & 2	$29.32	$10.68
Painter	$23.45	$8.63
Piledriver (See Carpenter Group 6)	See Appendix	See Appendix
Plasterer and Stucco Mason	See Appendix	See Appendix
Plumber/Pipefitter/Steamfitter	See Appendix	See Appendix
Power Equipment Operator Group 1	See Appendix	See Appendix
Power Equipment Operator Group 1A	See Appendix	See Appendix
Power Equipment Operator Group 1B	See Appendix	See Appendix
Power Equipment Operator Group 2	See Appendix	See Appendix
Power Equipment Operator Group 3	See Appendix	See Appendix
Power Equipment Operator Group 4	See Appendix	See Appendix
Power Equipment Operator Group 5	See Appendix	See Appendix
Power Equipment Operator Group 6	See Appendix	See Appendix

Using the booklet, Definitions of Covered Occupations, find the definition that most closely matches the actual work being performed by the worker.

OCCUPATION	BASIC HOURLY RATE	FRINGE RATE
Roofer	$26.78	$11.38
Sheet Metal Worker	$35.09	$14.53
Soft Floor Layer	See Appendix	See Appendix
Sprinkler Fitter	$37.15	$16.68
Tender to Mason Trades (Brick and Stonemason, Mortar Mixer, Hod Carrier)	See Appendix	See Appendix
Tender to Plasterer and Stucco Mason	$26.12	$12.29
Testing, Adjusting, and Balancing (TAB) Technician	$34.14	$13.04
Tilesetter/Terrazzo Worker: Hard Tilesetter	See Appendix	See Appendix
Tile, Terrazzo, and Marble Finisher	See Appendix	See Appendix
Truck Driver – All Groups	$23.45	$5.99

Using the booklet, Definitions of Covered Occupations, find the definition that most closely matches the actual work being performed by the worker.

OCCUPATION	BASIC HOURLY RATE	FRINGE RATE
Asbestos Worker/Insulator	See Appendix	See Appendix
Boilermaker	See Appendix	See Appendix
Bricklayer/Stonemason	See Appendix	See Appendix
Bridge and Highway Carpenter (See Carpenter Group 5)	See Appendix	See Appendix
Carpenter Group 1 & 2	See Appendix	See Appendix
Cement Mason	$28.77	$14.17
Diver	See Appendix	See Appendix
Diver Tender	See Appendix	See Appendix
Dredger	$42.22	$14.33
Drywall, Lather, Acoustical Carpenter & Ceiling Installer	$36.44	$16.61
Drywall Taper	$33.23	$14.32
Electrician	See Appendix	See Appendix
Elevator Constructor, Installer and Mechanic	See Appendix	See Appendix
Fence Constructor (Non-metal)	$27.22	$10.76
Fence Erector (Metal)	$20.50	$5.09
Flagger (See Laborer Group 3)	See Appendix	See Appendix
Glazier	See Appendix	See Appendix
Hazardous Material Handler/Mechanic	$21.25	$9.31
Highway and Parking Striper	$26.11	$8.20
Ironworker	$35.94	$23.35
Laborer Group 1	See Appendix	See Appendix
Laborer Group 2	See Appendix	See Appendix
Laborer Group 3	See Appendix	See Appendix
Landscape Laborer/Technician	$19.74	$4.77
Limited Energy Electrician	$31.64	$10.26
Line Constructor	$45.93	$16.25
Marble Setter	$34.28	$19.08
Millwright Group 1 & 2	$29.32	$10.68
Painter	See Appendix	See Appendix
Piledriver (See Carpenter Group 6)	See Appendix	See Appendix
Plasterer and Stucco Mason	$29.70	$16.91
Plumber/Pipefitter/Steamfitter	$44.44	$25.16
Power Equipment Operator Group 1	See Appendix	See Appendix
Power Equipment Operator Group 1A	See Appendix	See Appendix
Power Equipment Operator Group 1B	See Appendix	See Appendix
Power Equipment Operator Group 2	See Appendix	See Appendix
Power Equipment Operator Group 3	See Appendix	See Appendix
Power Equipment Operator Group 4	See Appendix	See Appendix
Power Equipment Operator Group 5	See Appendix	See Appendix
Power Equipment Operator Group 6	See Appendix	See Appendix

Using the booklet, Definitions of Covered Occupations, find the definition that most closely matches the actual work being performed by the worker.

OCCUPATION	BASIC HOURLY RATE	FRINGE RATE
Roofer	$26.78	$11.38
Sheet Metal Worker	$35.09	$14.53
Soft Floor Layer	$26.56	$11.09
Sprinkler Fitter	$37.15	$16.68
Tender to Mason Trades (Brick and Stonemason, Mortar Mixer, Hod Carrier)	$30.70	$11.59
Tender to Plasterer and Stucco Mason	$26.12	$12.29
Testing, Adjusting, and Balancing (TAB) Technician	$34.14	$13.04
Tilesetter/Terrazzo Worker: Hard Tilesetter	$31.01	$18.99
Tile, Terrazzo, and Marble Finisher	See Appendix	See Appendix
Truck Driver – All Groups	$23.45	$5.99

Using the booklet, Definitions of Covered Occupations, find the definition that most closely matches the actual work being performed by the worker.

OCCUPATION	BASIC HOURLY RATE	FRINGE RATE
Asbestos Worker/Insulator	See Appendix	See Appendix
Boilermaker	$38.43	$23.09
Bricklayer/Stonemason	See Appendix	See Appendix
Bridge and Highway Carpenter	$36.47	$15.41
Carpenter Group 1 & 2	See Appendix	See Appendix
Cement Mason	$28.77	$14.17
Diver	See Appendix	See Appendix
Diver Tender	See Appendix	See Appendix
Dredger	$42.22	$14.33
Drywall, Lather, Acoustical Carpenter & Ceiling Installer	$36.44	$16.61
Drywall Taper	$33.23	$14.32
Electrician	See Appendix	See Appendix
Elevator Constructor, Installer and Mechanic	See Appendix	See Appendix
Fence Constructor (Non-metal)	$27.22	$10.76
Fence Erector (Metal)	$20.50	$5.09
Flagger (See Laborer Group 3)	See Appendix	See Appendix
Glazier	See Appendix	See Appendix
Hazardous Materials Handler/Mechanic	$21.25	$9.31
Highway and Parking Striper	$26.11	$8.20
Ironworker	See Appendix	See Appendix
Laborer Group 1	See Appendix	See Appendix
Laborer Group 2	See Appendix	See Appendix
Laborer Group 3	See Appendix	See Appendix
Landscape Laborer/Technician	$19.74	$4.77
Limited Energy Electrician	See Appendix	See Appendix
Line Constructor	$45.93	$16.25
Marble Setter	$34.28	$19.08
Millwright Group 1 & 2	$29.32	$10.68
Painter	See Appendix	See Appendix
Piledriver (See Carpenter Group 6)	See Appendix	See Appendix
Plasterer and Stucco Mason	$29.70	$16.91
Plumber/Pipefitter/Steamfitter	See Appendix	See Appendix
Power Equipment Operator Group 1	See Appendix	See Appendix
Power Equipment Operator Group 1A	See Appendix	See Appendix
Power Equipment Operator Group 1B	See Appendix	See Appendix
Power Equipment Operator Group 2	See Appendix	See Appendix
Power Equipment Operator Group 3	See Appendix	See Appendix
Power Equipment Operator Group 4	See Appendix	See Appendix
Power Equipment Operator Group 5	See Appendix	See Appendix
Power Equipment Operator Group 6	See Appendix	See Appendix

Using the booklet, Definitions of Covered Occupations, find the definition that most closely matches the actual work being performed by the worker.

OCCUPATION	BASIC HOURLY RATE	FRINGE RATE
Roofer	$26.78	$11.38
Sheet Metal Worker	See Appendix	See Appendix
Soft Floor Layer	$26.56	$11.09
Sprinkler Fitter	See Appendix	See Appendix
Tender to Mason Trades (Brick and Stonemason, Mortar Mixer, Hod Carrier)	See Appendix	See Appendix
Tender to Plasterer and Stucco Mason	See Appendix	See Appendix
Testing, Adjusting, and Balancing (TAB) Technician	$34.14	$13.04
Tilesetter/Terrazzo Worker: Hard Tilesetter	See Appendix	See Appendix
Tile, Terrazzo, and Marble Finisher	See Appendix	See Appendix
Truck Driver – All Groups	$23.45	$5.99

Using the booklet, Definitions of Covered Occupations, find the definition that most closely matches the actual work being performed by the worker.

OCCUPATION	BASIC HOURLY RATE	FRINGE RATE
Asbestos Worker/Insulator	See Appendix	See Appendix
Boilermaker	See Appendix	See Appendix
Bricklayer/Stonemason	$36.64	$18.10
Bridge and Highway Carpenter	$36.47	$15.41
Carpenter Group 1 & 2	$32.01	$12.83
Cement Mason	$28.77	$14.17
Diver	See Appendix	See Appendix
Diver Tender	See Appendix	See Appendix
Dredger	See Appendix	See Appendix
Drywall, Lather, Acoustical Carpenter & Ceiling Installer	$36.44	$16.61
Drywall Taper	$33.23	$14.32
Electrician	See Appendix	See Appendix
Elevator Constructor, Installer and Mechanic	See Appendix	See Appendix
Fence Constructor (Non-metal)	$27.22	$10.76
Fence Erector (Metal)	$20.50	$5.09
Flagger (See Laborer Group 3)	See Appendix	See Appendix
Glazier	See Appendix	See Appendix
Hazardous Materials Handler/Mechanic	$21.25	$9.31
Highway and Parking Striper	$26.11	$8.20
Ironworker	$35.94	$23.35
Laborer Group 1	See Appendix	See Appendix
Laborer Group 2	See Appendix	See Appendix
Laborer Group 3	See Appendix	See Appendix
Landscape Laborer/Technician	$19.74	$4.77
Limited Energy Electrician	$31.64	$10.26
Line Constructor	See Appendix	See Appendix
Marble Setter	See Appendix	See Appendix
Millwright Group 1 & 2	$29.32	$10.68
Painter	$23.45	$8.63
Piledriver	$39.47	$16.65
Plasterer and Stucco Mason	$29.70	$16.91
Plumber/Pipefitter/Steamfitter	See Appendix	See Appendix
Power Equipment Operator Group 1	See Appendix	See Appendix
Power Equipment Operator Group 1A	See Appendix	See Appendix
Power Equipment Operator Group 1B	See Appendix	See Appendix
Power Equipment Operator Group 2	See Appendix	See Appendix
Power Equipment Operator Group 3	See Appendix	See Appendix
Power Equipment Operator Group 4	See Appendix	See Appendix
Power Equipment Operator Group 5	See Appendix	See Appendix
Power Equipment Operator Group 6	See Appendix	See Appendix

Using the booklet, Definitions of Covered Occupations, find the definition that most closely matches the actual work being performed by the worker.

OCCUPATION	BASIC HOURLY RATE	FRINGE RATE
Roofer	$26.78	$11.38
Sheet Metal Worker	$35.09	$14.53
Soft Floor Layer	$26.56	$11.09
Sprinkler Fitter	See Appendix	See Appendix
Tender to Mason Trades (Brick and Stonemason, Mortar Mixer, Hod Carrier)	$30.70	$11.59
Tender to Plasterer and Stucco Mason	$26.12	$12.29
Testing, Adjusting, and Balancing (TAB) Technician	$34.14	$13.04
Tilesetter/Terrazzo Worker: Hard Tilesetter	$31.01	$18.99
Tile, Terrazzo, and Marble Finisher	$24.97	$14.14
Truck Driver – All Groups	$23.45	$5.99

Using the booklet, Definitions of Covered Occupations, find the definition that most closely matches the actual work being performed by the worker.

OCCUPATION	BASIC HOURLY RATE	FRINGE RATE
Asbestos Worker/Insulator	See Appendix	See Appendix
Boilermaker	$38.43	$23.09
Bricklayer/Stonemason	See Appendix	See Appendix
Bridge and Highway Carpenter (See Carpenter Group 5)	See Appendix	See Appendix
Carpenter Group 1 & 2	See Appendix	See Appendix
Cement Mason	$28.77	$14.17
Diver	See Appendix	See Appendix
Diver Tender	See Appendix	See Appendix
Dredger	See Appendix	See Appendix
Drywall, Lather, Acoustical Carpenter & Ceiling Installer	See Appendix	See Appendix
Drywall Taper (See Painter & Drywall Taper)	See Appendix	See Appendix
Electrician	See Appendix	See Appendix
Elevator Constructor, Installer and Mechanic	See Appendix	See Appendix
Fence Constructor (Non-metal)	$27.22	$10.76
Fence Erector (Metal)	$20.50	$5.09
Flagger (See Laborer Group 3)	See Appendix	See Appendix
Glazier	See Appendix	See Appendix
Hazardous Materials Handler/Mechanic	$21.25	$9.31
Highway and Parking Striper	See Appendix	See Appendix
Ironworker	See Appendix	See Appendix
Laborer Group 1	See Appendix	See Appendix
Laborer Group 2	See Appendix	See Appendix
Laborer Group 3	See Appendix	See Appendix
Landscape Laborer/Technician	$19.74	$4.77
Limited Energy Electrician	See Appendix	See Appendix
Line Constructor	See Appendix	See Appendix
Marble Setter	See Appendix	See Appendix
Millwright Group 1 & 2 (See Carpenter Group 3 & 4)	See Appendix	See Appendix
Painter	$23.45	$8.63
Piledriver (See Carpenter Group 6)	See Appendix	See Appendix
Plasterer and Stucco Mason	$29.70	$16.91
Plumber/Pipefitter/Steamfitter	See Appendix	See Appendix
Power Equipment Operator Group 1	See Appendix	See Appendix
Power Equipment Operator Group 1A	See Appendix	See Appendix
Power Equipment Operator Group 1B	See Appendix	See Appendix
Power Equipment Operator Group 2	See Appendix	See Appendix
Power Equipment Operator Group 3	See Appendix	See Appendix
Power Equipment Operator Group 4	See Appendix	See Appendix
Power Equipment Operator Group 5	See Appendix	See Appendix
Power Equipment Operator Group 6	See Appendix	See Appendix

Using the booklet, Definitions of Covered Occupations, find the definition that most closely matches the actual work being performed by the worker.

OCCUPATION	BASIC HOURLY RATE	FRINGE RATE
Roofer	$26.78	$11.38
Sheet Metal Worker	See Appendix	See Appendix
Soft Floor Layer	$26.56	$11.09
Sprinkler Fitter	$37.15	$16.68
Tender to Mason Trades (Brick and Stonemason, Mortar Mixer, Hod Carrier)	See Appendix	See Appendix
Tender to Plasterer and Stucco Mason	$26.12	$12.29
Testing, Adjusting, and Balancing (TAB) Technician	$34.14	$13.04
Tilesetter/Terrazzo Worker: Hard Tilesetter	See Appendix	See Appendix
Tile, Terrazzo, and Marble Finisher	See Appendix	See Appendix
Truck Driver – All Groups	$23.45	$5.99

Using the booklet, Definitions of Covered Occupations, find the definition that most closely matches the actual work being performed by the worker.

OCCUPATION	BASIC HOURLY RATE	FRINGE RATE
Asbestos Worker/Insulator	See Appendix	See Appendix
Boilermaker	$38.43	$23.09
Bricklayer/Stonemason	See Appendix	See Appendix
Bridge and Highway Carpenter (See Carpenter Group 5)	See Appendix	See Appendix
Carpenter Group 1 & 2	See Appendix	See Appendix
Cement Mason	See Appendix	See Appendix
Diver	See Appendix	See Appendix
Diver Tender	See Appendix	See Appendix
Dredger	See Appendix	See Appendix
Drywall, Lather, Acoustical Carpenter & Ceiling Installer	See Appendix	See Appendix
Drywall Taper (See Painter & Drywall Taper)	See Appendix	See Appendix
Electrician	See Appendix	See Appendix
Elevator Constructor, Installer and Mechanic	See Appendix	See Appendix
Fence Constructor (Non-metal)	$27.22	$10.76
Fence Erector (Metal)	$20.50	$5.09
Flagger (See Laborer Group 3)	See Appendix	See Appendix
Glazier	$36.72	$17.66
Hazardous Materials Handler/Mechanic	$21.25	$9.31
Highway and Parking Striper	See Appendix	See Appendix
Ironworker	See Appendix	See Appendix
Laborer Group 1	See Appendix	See Appendix
Laborer Group 2	See Appendix	See Appendix
Laborer Group 3	See Appendix	See Appendix
Landscape Laborer/Technician	$19.74	$4.77
Limited Energy Electrician	$31.64	$10.26
Line Constructor	See Appendix	See Appendix
Marble Setter	$34.28	$19.08
Millwright Group 1 & 2	$29.32	$10.68
Painter	$23.45	$8.63
Piledriver (See Carpenter Group 6)	See Appendix	See Appendix
Plasterer and Stucco Mason	$29.70	$16.91
Plumber/Pipefitter/Steamfitter	See Appendix	See Appendix
Power Equipment Operator Group 1	See Appendix	See Appendix
Power Equipment Operator Group 1A	See Appendix	See Appendix
Power Equipment Operator Group 1B	See Appendix	See Appendix
Power Equipment Operator Group 2	See Appendix	See Appendix
Power Equipment Operator Group 3	See Appendix	See Appendix
Power Equipment Operator Group 4	See Appendix	See Appendix
Power Equipment Operator Group 5	See Appendix	See Appendix
Power Equipment Operator Group 6	See Appendix	See Appendix

Using the booklet, Definitions of Covered Occupations, find the definition that most closely matches the actual work being performed by the worker.

OCCUPATION	BASIC HOURLY RATE	FRINGE RATE
Roofer	$26.78	$11.38
Sheet Metal Worker	See Appendix	See Appendix
Soft Floor Layer	See Appendix	See Appendix
Sprinkler Fitter	See Appendix	See Appendix
Tender to Mason Trades (Brick and Stonemason, Mortar Mixer, Hod Carrier)	$30.70	$11.59
Tender to Plasterer and Stucco Mason	See Appendix	See Appendix
Testing, Adjusting, and Balancing (TAB) Technician	$34.14	$13.04
Tilesetter/Terrazzo Worker: Hard Tilesetter	$31.01	$18.99
Tile, Terrazzo, and Marble Finisher	$24.97	$14.14
Truck Driver – All Groups	$23.45	$5.99

Using the booklet, Definitions of Covered Occupations, find the definition that most closely matches the actual work being performed by the worker.

OCCUPATION	BASIC HOURLY RATE	FRINGE RATE
Asbestos Worker/Insulator	See Appendix	See Appendix
Boilermaker	See Appendix	See Appendix
Bricklayer/Stonemason	See Appendix	See Appendix
Bridge and Highway Carpenter	$36.47	$15.41
Carpenter Group 1 & 2	$32.01	$12.83
Cement Mason	$28.77	$14.17
Diver	See Appendix	See Appendix
Diver Tender	See Appendix	See Appendix
Dredger	See Appendix	See Appendix
Drywall, Lather, Acoustical Carpenter & Ceiling Installer	$36.44	$16.61
Drywall Taper	$33.23	$14.32
Electrician	See Appendix	See Appendix
Elevator Constructor, Installer and Mechanic	See Appendix	See Appendix
Fence Constructors (Non-metal)	$27.22	$10.76
Fence Erector (Metal)	$20.50	$5.09
Flagger (See Laborer Group 3)	See Appendix	See Appendix
Glazier	$36.72	$17.66
Hazardous Materials Handler/Mechanic	$21.25	$9.31
Highway and Parking Striper	$26.11	$8.20
Ironworker	See Appendix	See Appendix
Laborer Group 1	See Appendix	See Appendix
Laborer Group 2	See Appendix	See Appendix
Laborer Group 3	See Appendix	See Appendix
Landscape Laborer/Technician	$19.74	$4.77
Limited Energy Electrician	$31.64	$10.26
Line Constructor	See Appendix	See Appendix
Marble Setter	See Appendix	See Appendix
Millwright Group 1 & 2	$29.32	$10.68
Painter	$23.45	$8.63
Piledriver	$39.47	$16.65
Plasterer and Stucco Mason	$29.70	$16.91
Plumber/Pipefitter/Steamfitter	$44.44	$25.16
Power Equipment Operator Group 1	See Appendix	See Appendix
Power Equipment Operator Group 1A	See Appendix	See Appendix
Power Equipment Operator Group 1B	See Appendix	See Appendix
Power Equipment Operator Group 2	See Appendix	See Appendix
Power Equipment Operator Group 3	See Appendix	See Appendix
Power Equipment Operator Group 4	See Appendix	See Appendix
Power Equipment Operator Group 5	See Appendix	See Appendix
Power Equipment Operator Group 6	See Appendix	See Appendix

Using the booklet, Definitions of Covered Occupations, find the definition that most closely matches the actual work being performed by the worker.

OCCUPATION	BASIC HOURLY RATE	FRINGE RATE
Roofer	$26.78	$11.38
Sheet Metal Worker	$35.09	$14.53
Soft Floor Layer	See Appendix	See Appendix
Sprinkler Fitter	$37.15	$16.68
Tender to Mason Trades (Brick and Stonemason, Mortar Mixer, Hod Carrier)	$30.70	$11.59
Tender to Plasterer and Stucco Mason	$26.12	$12.29
Testing, Adjusting, and Balancing (TAB) Technician	$34.14	$13.04
Tilesetter/Terrazzo Worker: Hard Tilesetter	See Appendix	See Appendix
Tile, Terrazzo, and Marble Finisher	See Appendix	See Appendix
Truck Driver – All Groups	$23.45	$5.99

Using the booklet, Definitions of Covered Occupations, find the definition that most closely matches the actual work being performed by the worker.

OCCUPATION	BASIC HOURLY RATE	FRINGE RATE
Asbestos Worker/Insulator	See Appendix	See Appendix
Boilermaker	See Appendix	See Appendix
Bricklayer/Stonemason	See Appendix	See Appendix
Bridge and Highway Carpenter (See Carpenter Group 5)	See Appendix	See Appendix
Carpenter Group 1 & 2	See Appendix	See Appendix
Cement Mason	See Appendix	See Appendix
Diver	See Appendix	See Appendix
Diver Tender	See Appendix	See Appendix
Dredger	See Appendix	See Appendix
Drywall, Lather, Acoustical Carpenter & Ceiling Installer	See Appendix	See Appendix
Drywall Taper (See Painter & Drywall Taper)	See Appendix	See Appendix
Electrician	See Appendix	See Appendix
Elevator Constructor, Installer and Mechanic	See Appendix	See Appendix
Fence Constructor (Non-metal)	$27.22	$10.76
Fence Erector (Metal)	$20.50	$5.09
Flagger (See Laborer Group 3)	See Appendix	See Appendix
Glazier	$36.72	$17.66
Hazardous Materials Handler/Mechanic	$21.25	$9.31
Highway and Parking Striper	See Appendix	See Appendix
Ironworker	See Appendix	See Appendix
Laborer Group 1	See Appendix	See Appendix
Laborer Group 2	See Appendix	See Appendix
Laborer Group 3	See Appendix	See Appendix
Landscape Laborer/Technician	$19.74	$4.77
Limited Energy Electrician	$31.64	$10.26
Line Constructor	See Appendix	See Appendix
Marble Setter	See Appendix	See Appendix
Millwright Group 1 & 2	$29.32	$10.68
Painter	See Appendix	See Appendix
Piledriver (See Carpenter Group 6)	See Appendix	See Appendix
Plasterer and Stucco Mason	$29.70	$16.91
Plumber/Pipefitter/Steamfitter	See Appendix	See Appendix
Power Equipment Operator Group 1	See Appendix	See Appendix
Power Equipment Operator Group 1A	See Appendix	See Appendix
Power Equipment Operator Group 1B	See Appendix	See Appendix
Power Equipment Operator Group 2	See Appendix	See Appendix
Power Equipment Operator Group 3	See Appendix	See Appendix
Power Equipment Operator Group 4	See Appendix	See Appendix
Power Equipment Operator Group 5	See Appendix	See Appendix
Power Equipment Operator Group 6	See Appendix	See Appendix

Using the booklet, Definitions of Covered Occupations, find the definition that most closely matches the actual work being performed by the worker.

OCCUPATION	BASIC HOURLY RATE	FRINGE RATE
Roofer	$26.78	$11.38
Sheet Metal Worker	See Appendix	See Appendix
Soft Floor Layer	$26.56	$11.09
Sprinkler Fitter	See Appendix	See Appendix
Tender to Mason Trades (Brick and Stonemason, Mortar Mixer, Hod Carrier)	See Appendix	See Appendix
Tender to Plasterer and Stucco Mason	$26.12	$12.29
Testing, Adjusting, and Balancing (TAB) Technician	See Appendix	See Appendix
Tilesetter/Terrazzo Worker: Hard Tilesetter	$31.01	$18.99
Tile, Terrazzo, and Marble Finisher	See Appendix	See Appendix
Truck Driver – All Groups	$23.45	$5.99

Using the booklet, Definitions of Covered Occupations, find the definition that most closely matches the actual work being performed by the worker.

OCCUPATION	BASIC HOURLY RATE	FRINGE RATE
Asbestos Worker/Insulator	See Appendix	See Appendix
Boilermaker	$38.43	$23.09
Bricklayer/Stonemason	See Appendix	See Appendix
Bridge and Highway Carpenter	$36.47	$15.41
Carpenter Group 1 & 2	$32.01	$12.83
Cement Mason	$28.77	$14.17
Diver	See Appendix	See Appendix
Diver Tender	See Appendix	See Appendix
Dredger	See Appendix	See Appendix
Drywall, Lather, Acoustical Carpenter & Ceiling Installer	$36.44	$16.61
Drywall Taper (See Painter & Drywall Taper)	See Appendix	See Appendix
Electrician	$41.93	$18.30
Elevator Constructor, Installer and Mechanic	See Appendix	See Appendix
Fence Constructor (Non-metal)	$27.22	$10.76
Fence Erector (Metal)	$20.50	$5.09
Flagger	$21.03	$10.45
Glazier	See Appendix	See Appendix
Hazardous Materials Handler/Mechanic	$21.25	$9.31
Highway and Parking Striper	$26.11	$8.20
Ironworker	$35.94	$23.35
Laborer Group 1	$26.43	$10.11
Laborer Group 2	$29.32	$11.71
Laborer Group 3	$25.08	$13.46
Landscape Laborer/Technician	$19.74	$4.77
Limited Energy Electrician	$31.64	$10.26
Line Constructor	$45.93	$16.25
Marble Setter	See Appendix	See Appendix
Millwright Group 1 & 2	$29.32	$10.68
Painter	$23.45	$8.63
Piledriver (See Carpenter Group 6)	See Appendix	See Appendix
Plasterer and Stucco Mason	$29.70	$16.91
Plumber/Pipefitter/Steamfitter	See Appendix	See Appendix
Power Equipment Operator Group 1	See Appendix	See Appendix
Power Equipment Operator Group 1A	See Appendix	See Appendix
Power Equipment Operator Group 1B	See Appendix	See Appendix
Power Equipment Operator Group 2	See Appendix	See Appendix
Power Equipment Operator Group 3	See Appendix	See Appendix
Power Equipment Operator Group 4	See Appendix	See Appendix
Power Equipment Operator Group 5	See Appendix	See Appendix
Power Equipment Operator Group 6	See Appendix	See Appendix

Using the booklet, Definitions of Covered Occupations, find the definition that most closely matches the actual work being performed by the worker.

OCCUPATION	BASIC HOURLY RATE	FRINGE RATE
Roofer	$26.78	$11.38
Sheet Metal Worker	See Appendix	See Appendix
Soft Floor Layer	$26.56	$11.09
Sprinkler Fitter	$37.15	$16.68
Tender to Mason Trades (Brick and Stonemason, Mortar Mixer, Hod Carrier)	$30.70	$11.59
Tender to Plasterer and Stucco Mason	$26.12	$12.29
Testing, Adjusting, and Balancing (TAB) Technician	$34.14	$13.04
Tilesetter/Terrazzo Worker: Hard Tilesetter	$31.01	$18.99
Tile, Terrazzo, and Marble Finisher	See Appendix	See Appendix
Truck Driver – All Groups	$23.45	$5.99

Using the booklet, Definitions of Covered Occupations, find the definition that most closely matches the actual work being performed by the worker.

OCCUPATION	BASIC HOURLY RATE	FRINGE RATE
Asbestos Worker/Insulator	See Appendix	See Appendix
Boilermaker	See Appendix	See Appendix
Bricklayer/Stonemason	$36.64	$18.10
Bridge and Highway Carpenter	$36.47	$15.41
Carpenter Group 1 & 2	$32.01	$12.83
Cement Mason	$28.77	$14.17
Diver	See Appendix	See Appendix
Diver Tender	See Appendix	See Appendix
Dredger	See Appendix	See Appendix
Drywall, Lather, Acoustical Carpenter & Ceiling Installer	$36.44	$16.61
Drywall Taper	$33.23	$14.32
Electrician	$41.93	$18.30
Elevator Constructor, Installer and Mechanic	See Appendix	See Appendix
Fence Constructor (Non-metal)	$27.22	$10.76
Fence Erector (Metal)	$20.50	$5.09
Flagger (See Laborer Group 3)	See Appendix	See Appendix
Glazier	$36.72	$17.66
Hazardous Materials Handler/Mechanic	$21.25	$9.31
Highway and Parking Striper	See Appendix	See Appendix
Ironworker	See Appendix	See Appendix
Laborer Group 1	See Appendix	See Appendix
Laborer Group 2	See Appendix	See Appendix
Laborer Group 3	See Appendix	See Appendix
Landscape Laborer/Technician	$19.74	$4.77
Limited Energy Electrician	$31.64	$10.26
Line Constructor	See Appendix	See Appendix
Marble Setter	See Appendix	See Appendix
Millwright Group 1 & 2	$29.32	$10.68
Painter	$23.45	$8.63
Piledriver	$39.47	$16.65
Plasterer and Stucco Mason	$29.70	$16.91
Plumber/Pipefitter/Steamfitter	$44.44	$25.16
Power Equipment Operator Group 1	See Appendix	See Appendix
Power Equipment Operator Group 1A	See Appendix	See Appendix
Power Equipment Operator Group 1B	See Appendix	See Appendix
Power Equipment Operator Group 2	See Appendix	See Appendix
Power Equipment Operator Group 3	See Appendix	See Appendix
Power Equipment Operator Group 4	See Appendix	See Appendix
Power Equipment Operator Group 5	See Appendix	See Appendix
Power Equipment Operator Group 6	See Appendix	See Appendix

Using the booklet, Definitions of Covered Occupations, find the definition that most closely matches the actual work being performed by the worker.

OCCUPATION	BASIC HOURLY RATE	FRINGE RATE
Roofer	$26.78	$11.38
Sheet Metal Worker	$35.09	$14.53
Soft Floor Layer	$26.56	$11.09
Sprinkler Fitter	See Appendix	See Appendix
Tender to Mason Trades (Brick and Stonemason, Mortar Mixer, Hod Carrier)	$30.70	$11.59
Tender to Plasterer and Stucco Mason	$26.12	$12.29
Testing, Adjusting, and Balancing (TAB) Technician	$34.14	$13.04
Tilesetter/Terrazzo Worker: Hard Tilesetter	$31.01	$18.99
Tile, Terrazzo, and Marble Finisher	See Appendix	See Appendix
Truck Driver – All Groups	See Appendix	See Appendix

APPENDIX

JULY 1, 2020

Collectively Bargained Rates

(To be used only when referred to in the Regions pages 6-33)

JULY 1, 2020 APPENDIX

The Appendix rates are Collectively Bargained Rates to be used ONLY for Regions/Trades specified in pages 6 through 33. Refer to pages 6 through 33 BEFORE using rates in this section.
Rates in this section may include premium pay such as shift differential, hazard pay and/or a zone pay differential, which is added to the hourly base rate.

Using the booklet, Definitions of Covered Occupations, find the definition and group number, if applicable, that most closely matches the actual work being performed by the worker.

TRADE	HOURLY BASE RATE	HOURLY FRINGE RATE
ASBESTOS WORKER/INSULATOR		
	52.77	**22.67**
Firestop Containment	**37.73**	**15.84**
BOILERMAKER	**38.51**	**30.29**
BRICKLAYER/STONEMASON		
	41.20	**21.12**

(This trade is tended by "Tenders to Mason Trades")

(Add $1.00 per hour to Fringe for Refractory repair work)

CARPENTER

Zone A (Base Rate)

Group 1	**41.75**	**18.30**
Group 2	**41.92**	**18.30**
Group 3	**43.26**	**18.30**
Group 4	**Eliminated**	
Group 5	**42.31**	**18.30**
Group 6	**42.87**	**18.30**

Zone Differential for Carpenters
(Add to Zone A Base Rate)

Zone B	**1.25** per hour
Zone C	**1.70** per hour
Zone D	**2.00** per hour
Zone E	**3.00** per hour
Zone F	**5.00** per hour
Zone G	**10.00** per hour

Zone A: Projects located within 30 miles of the respective city hall of the cities listed.
Zone B: More than 30 miles but less than 40 miles.
Zone C: More than 40 miles but less than 50 miles.
Zone D: More than 50 miles but less than 60 miles.
Zone E: More than 60 miles but less than 70 miles.
Zone F: More than 70 miles but less than 100 miles.
Zone G: More than 100 miles.

CARPENTER (continued)

Reference Cities for Group 1 and 2 Carpenters

Albany	Goldendale	Madras	Roseburg
Astoria	Grants Pass	Medford	Salem
Baker City	Hermiston	Newport	The Dalles
Bend	Hood River	Ontario	Tillamook
Brookings	Klamath Falls	Pendleton	Vancouver
Burns	La Grande	Portland	
Coos Bay	Lakeview	Port Orford	
Eugene	Longview	Reedsport	

Group 3
(Millwright)

Zones for Group 3 Carpenter are determined by the distance between the project site and **either**

1) The worker's residence; ***or***

2) City Hall of a reference city listed for the appropriate group shown, whichever is closer

Reference Cities for Group 3 Carpenters

Eugene	Medford	Portland	Vancouver
Longview	North Bend	The Dalles	

Group 5
(Bridge & Highway Carpenter)

Group 6
(Piledriver)

Zones for Groups 5 and 6 Carpenter are determined by the distance between the project site and **either**

1) The worker's residence; ***or***

2) City Hall of a reference city listed for the appropriate group shown, whichever is closer

Reference Cities for Group 5 and 6 Carpenters

Bend	Longview	North Bend
Eugene	Medford	Portland

Note: All job or project locations shall be computed (determined) on the basis of road miles and in the following manner. A mileage measurement will start at the entrance to the respective city hall, facing the project (if possible), and shall proceed by the normal route (shortest time, best road) to the geographical center on the highway, railroad, and street construction projects (end of measurement). On all project contracts, the geographical center where the major portion of the construction is located, shall be considered the center of the project (end measurement).

TRADE	HOURLY BASE RATE	HOURLY FRINGE RATE

CARPENTER (continued)

Welders receive $1.75/hour above their group's rate with an eight (8) hour minimum.

When working with creosote and other toxic, treated wood and steel material, workers shall receive $.25/hour premium pay for minimum of eight (8) hours.

When working in sheet pile coffer dams or cells up to the external water level, Group 6 workers shall receive $.15/hour premium pay for minimum of eight (8) hours.

CEMENT MASON

(This trade is tended by "Concrete Laborer")

Base Rate

Group 1	**35.52**	**21.42**
Group 2	**36.29**	**21.42**
Group 3	**36.29**	**21.42**
Group 4	**37.05**	**21.42**

Zone Differential for Cement Mason
(Add to Basic Hourly Rate)

Zone A	**3.00** per hour
Zone B	**5.00** per hour
Zone C	**10.00** per hour

Zone A: Projects located 60-79 miles of the respective city hall of the Reference Cities listed below.
Zone B: Projects located 80-99 miles of the respective city hall of the Reference Cities listed below.
Zone C: Projects located 100 or more miles of the respective city hall of the Reference Cities listed below.

Reference Cities for Zones A-C (Cement Mason)

Bend	Medford	Salem
Corvallis	Pendleton	The Dalles
Eugene	Portland	Vancouver

When a contractor takes current employees to a project that is located more than 59 miles from the city hall of the Reference City that is closest to the contractor's place of business, Zone Pay is to be paid for the distance between the city hall of the identified Reference City and the project site.

"Contractor's place of business" shall include not only contractor's principal place of business but also contractor's area office(s) that support contractor's operations in a geographical region. Such area office(s) shall not include project offices(s) established for the duration of a particular project.

CEMENT MASON (continued)

Note: All miles are to be determined on the basis of road miles using the normal route (shortest time – best road), from the city hall of the Reference City closest to the contractor's place of business and the project.

DIVER & DIVER TENDER

Zone 1 (Base Rate)

DIVER	**91.14**	**18.30**
DIVER TENDER	**47.14**	**18.30**

1) For those workers who reside within a reference city below, their zone pay shall be computed from the city hall of the city wherein they reside.

2) For those workers who reside nearer to a project than is the city hall of any reference city below, the mileage from their residence may be used in computing their zone pay differential.

3) The zone pay for all other projects shall be computed from the city hall of Portland.

Zone Differential for Diver/Diver Tender
(Add to Zone 1 Base Rate)

Zone 2	**1.25** per hour
Zone 3	**1.70** per hour
Zone 4	**2.00** per hour
Zone 5	**3.00** per hour
Zone 6	**5.00** per hour
Zone 7	**10.00** per hour

Zone 1: Projects located within 30 miles of city hall of the reference cities listed.
Zone 2: More than 30 miles, but less than 40 miles.
Zone 3: More than 40 miles, but less than 50 miles.
Zone 4: More than 50 miles, but less than 60 miles.
Zone 5: More than 60 miles, but less than 70 miles.
Zone 6: More than 70 miles, but less than 100 miles.
Zone 7: More than 100 miles from the city hall of employee's home local.

Reference Cities for Diver/Diver Tender

Bend	Medford
Eugene	North Bend
Longview	Portland

DIVER & DIVER TENDER (continued)

Note: All job or project locations shall be computed (determined) on the basis of road miles and in the following manner. A mileage measurement will start at the entrance to the respective city hall, facing the project (if possible), and shall proceed by the normal route (shortest time, best road) to the geographical center on the highway, railroad, and street construction projects (end of measurement). On all project contracts, the geographical center where the major portion of the construction is located, shall be considered the center of the project (end measurement).

Depth Pay and Enclosure Pay are added to the Divers' Basic Hourly Rate to obtain the Total Hourly Rate for the Diver.

Basic Hourly Rate	+	Hourly Depth Pay	+	Hourly Enclosure Pay	=	Diver Total Hourly Pay Rate

Diver Depth Pay:

Depth of Dive	Hourly Depth Pay
50-100 ft.	$2.00 per foot over 50 feet
101-150 ft.	$3.00 per foot over 100 feet
151-220 ft.	$4.00 per foot over 150 feet
Over 220 ft.	$5.00 per foot over 220 ft.

Depth shall be figured from the surface to the actual depth where the diving work is being performed.

Diver Enclosure Pay (working without vertical escape):

Distance Traveled In the Enclosure	Hourly Enclosure Pay
0 - 25ft.	N/C
25 - 300 ft.	$1.00 per foot from the entrance
300 - 600 ft.	$1.50 per foot beginning at 300 ft.
Over 600 ft.	$2.00 per foot beginning at 600 ft.

DREDGER

Zone A (Base Rate)

TRADE	HOURLY BASE RATE	HOURLY FRINGE RATE
Leverman (Hydraulic & Clamshell)	**50.46**	**15.15**
Assistant Engineer (Watch Engineer, Mechanic Machinist)	**47.30**	**15.15**
Tenderman (Boatman Attending Dredge Plant) Fireman	**45.81**	**15.15**
Fill Equipment Operator	**44.64**	**15.15**
Assistant Mate	**41.94**	**15.15**

Zone Differential for Dredgers
(Add to Zone A Base Rate)

Zone B	**3.00** per hour
Zone C	**6.00** per hour

Zone mileage based on road miles:

Zone A: Center of jobsite to no more than 30 miles from the city hall of Portland.
Zone B: More than 30 miles but not more than 60 miles.
Zone C: Over 60 miles.

DRYWALL, LATHER, ACOUSTICAL CARPENTER & CEILING INSTALLER

Zone 1 (Base Rate)

TRADE	HOURLY BASE RATE	HOURLY FRINGE RATE
1. DRYWALL INSTALLER	**42.04**	**18.01**
2. LATHER, ACOUSTICAL CARPENTER & CEILING INSTALLER	**42.04**	**18.01**

See Zone Differential on page 41

TRADE	HOURLY BASE RATE	HOURLY FRINGE RATE	TRADE	HOURLY BASE RATE	HOURLY FRINGE RATE

DRYWALL, LATHER, ACOUSTICAL CARPENTER & CEILING INSTALLER (continued)

Zone Differential for Drywall, Lather, Acoustical Carpenter & Ceiling Installer
(Add to Zone 1 Base Rate)

Zone mileage based on road miles:

Zone B	61-80 miles	**6.00** per hour
Zone C	81-100 miles	**9.00** per hour
Zone D	101 or more	12**.00** per hour

The correct transportation allowance shall be based on AAA road mileage from the City Hall of the transportation reference cities herein listed.

Reference Cities for Drywall, Lather, Acoustical Carpenter & Ceiling Installer

Albany	Coquille	Medford	Roseburg
Astoria	Eugene	Newport	Salem
Baker	Grants Pass	North Bend	Seaside
Bandon	Hermiston	Pendleton	The Dalles
Bend	Klamath Falls	Portland	Tillamook
Brookings	Kelso-Longview	Reedsport	Vancouver

ELECTRICIAN

Area 1

Electrician	**31.65**	**15.16**
Cable Splicer	**34.82**	**15.34**

Reference Counties Area 1

Malheur

Area 2

Electrician	**48.05**	**22.12**
Cable Splicer	**50.45**	**22.19**

Reference Counties Area 2

Baker	Grant	Umatilla	Wallowa
Gilliam	Morrow	Union	Wheeler

Add 50% of the base rate when workers are required to work under the following conditions:

ELECTRICIAN (continued)

1) Under compressed air with atmospheric pressure exceeding normal pressure by at least 10%.

2) From trusses, swing scaffolds, bosun's chairs, open platforms, unguarded scaffolds, open ladders, frames, tanks, stacks, silos and towers where the workman is subject to a direct fall of (a) more than 60 feet or (b) into turbulent water under bridges, powerhouses or spillway faces of dams.

Area 3

Electrician	**40.53**	**21.17**

Reference Counties Area 3

Coos	Douglas (a)	Lincoln
Curry	Lane (a)	

(a) Those portions of Lane and Douglas lying **west** of a line running North and South from the NE corner of Coos County to the SE corner of Lincoln County.

Shift Differential

1st Shift "day"	Between the hours of 8:00am and 4:30pm	8 hours pay for 8 hours work
2nd Shift "swing"	Between the hours of 4:30pm and 1:00am	8 hours pay for 8 hours work plus 17% for all hours worked
3rd Shift "graveyard"	Between the hours of 12:30am and 9:00am	8 hours pay for 8 hours work plus 31% for all hours worked.

When workers are required to work under compressed air or where gas masks are required, or to work from trusses, all scaffolds including mobile elevated platforms, any temporary structure, bosun's chair or on frames, stacks, towers, tanks, within 15' of the leading edges of any building at a distance of:

50 – 75 feet to the ground	Add 1 ½ x the base rate
75+ feet to the ground	Add 2 x the base rate

TRADE	HOURLY BASE RATE	HOURLY FRINGE RATE

ELECTRICIAN (continued)

High Time is not required to be paid on any permanent structure with permanent adequate safeguards (handrails, mid-rails, and toe guards). Any vehicle equipped with outriggers are exempted from this section.

Area 4

Electrician	**45.01**	**19.79**
Cable Splicer	**49.51**	**19.93**
Lighting Maintenance/ Material Handlers	**20.43**	**10.06**

Reference Counties Area 4

Benton	Jefferson	Marion
Crook	Lane (b)	Polk
Deschutes	Linn	Yamhill (c)

(b) That portion of Lane County lying **east** of a line running North and South from the NE corner of Coos County to the SE corner of Lincoln County.

(c) South half

Shift Differential

1st Shift "day"	Between the hours of 8:00am and 4:30pm	8 hours pay for 8 hours work
2nd Shift "swing"	Between the hours of 4:30pm and 1:00am	8 hours pay for 8 hours work plus 17% for all hours worked
3rd Shift "graveyard"	Between the hours of 12:30am and 9:00am	8 hours pay for 8 hours work plus 31.4% for all hours worked.

Area 5

Electrician	**47.85**	**25.71**
Electrical Welder	**52.64**	**25.85**
Material Handler/ Lighting Maintenance	**27.27**	**16.97**

Reference Counties Area 5

Clackamas	Hood River	Tillamook	Yamhill (d)
Clatsop	Multnomah	Wasco	
Columbia	Sherman	Washington	

(d) North Half

ELECTRICIAN (continued)

Shift Differential

1st Shift "day"	Between the hours of 8:00am and 4:30pm	8 hours pay for 8 hours work
2nd Shift "swing"	Between the hours of 4:30pm and 1:00am	8 hours pay for 8 hours work plus 17.3% for all hours worked
3rd Shift "graveyard"	Between the hours of 12:30am and 9:00am	8 hours pay for 8 hours work plus 31.4% for all hours worked.

Zone Pay for Area 5 **Electrician and Electrical Welder**
(Add to Basic Hourly Rate)

Zone mileage based on air miles:

Zone 1	31-50 miles	**1.50** per hour
Zone 2	51-70 miles	**3.50** per hour
Zone 3	71-90 miles	**5.50** per hour
Zone 4	Beyond 90	**9.00** per hour

There shall be a 30-mile free zone from downtown Portland City Hall and a similar 15-mile free zone around the following cities:

Astoria	Seaside	Tillamook
Hood River	The Dalles	

Further, the free zone at the Oregon coast shall extend along Hwy 101 west to the ocean Hwy 101 east 10 miles if not already covered by the above 15-mile free zone.

Area 6

Electrician	**36.96**	**17.40**
Lighting Maintenance and Material Handlers	**17.65**	**9.98**

Reference Counties Area 6

Douglas (e)	Jackson	Klamath
Harney	Josephine	Lake

(e) That portion of Douglas County lying **east** of a line running North and South from the NE corner of Coos County to the SE corner of Lincoln County.

See Shift Differential on page 43

TRADE	HOURLY BASE RATE	HOURLY FRINGE RATE

ELECTRICIAN (continued)

Shift Differential

1st Shift "day"	Between the hours of 8:00am and 4:30pm	8 hours pay for 8 hours work
2nd Shift "swing"	Between the hours of 4:30pm and 1:00am	8 hours pay for 8 hours work plus 7.5% for all hours worked
3rd Shift "graveyard"	Between the hours of 12:30am and 9:00am	8 hours pay for 8 hours work plus 15% for all hours worked.

When workers are required to work under compressed air or to work from trusses, scaffolds, swinging scaffolds, bosun's chair or on building frames, stacks or towers at a distance of 50 to 90 feet from the ground or supporting structures shall be paid 1-1/2 times the base rate of pay.

ELEVATOR CONSTRUCTOR, INSTALLER AND MECHANIC

Area 1

Mechanic **55.86** **40.97**

Reference Counties Area 1

Baker Umatilla Union Wallowa

Area 2

Mechanic **56.10** **41.00**

Reference Counties Area 2

All remaining Counties

GLAZIER **41.17** **23.30**

(Add $1.00 to base rate if safety belt is required by State safety regulations)

(Add $4.00 to base rate for work done from a non-motorized single-man bosun chair)

HAZARDOUS MATERIALS HANDLER

26.03 **12.68**

HIGHWAY/PARKING STRIPER

35.87 **13.50**

Shift Differential

(Add $1.85 to base rate for shifts that start between 3:00pm and 4:00am)

IRONWORKER

Zone 1 (Base Rate): **38.00** **26.86**

Zone Differential for Ironworker
(Add to Basic Hourly Rate)

Zone 2 **5.63**/hr. or $45.00 maximum per day
Zone 3 **8.75**/hr. or $70.00 maximum per day
Zone 4 **11.25**/hr. or $90.00 maximum per day

Zone 1: Projects located within 45 miles of city hall in the reference cities listed below.
Zone 2: More than 45 miles, but less than 60 miles.
Zone 3: More than 60 miles, but less than 100 miles.
Zone 4: More than 100 miles.

Note: Zone pay for Ironworkers shall be determined using AAA road mileage computed from the city hall or dispatch center of the reference cities listed below **or** the residence of the employee, whichever is nearer to the project.

Reference Cities and Dispatch Center

Medford Portland

LABORER

Zone A (Base Rate):

Group 1	**31.83**	**15.40**
Group 2	**33.01**	**15.40**
Group 3	**27.56**	**15.40**

Note: A Hazardous Waste Removal Differential must be added to the base rate if work is performed inside the boundary of a Federally Designated Hazardous Waste Site. A Group 1 base rate is used for General Laborer on such a site. For further information on this, call the Prevailing Wage Rate Coordinator at (971) 673-0839.

See Zone Differential on page 44

TRADE	HOURLY BASE RATE	HOURLY FRINGE RATE

LABORER (continued)

Zone Differential for Laborers
(Add to Zone A Base Rate)

Zone B	**.85** per hour
Zone C	**1.25** per hour
Zone D	**2.00** per hour
Zone E	**3.00** per hour
Zone F	**5.00** per hour

Zone A: Projects located within 30 miles of city hall in the reference cities listed.
Zone B: More than 30 miles but less than 40 miles.
Zone C: More than 40 miles but less than 50 miles.
Zone D: More than 50 miles but less than 80 miles.
Zone E: More than 80 miles but less than 100 miles.
Zone F: More than 100 miles.

Reference Cities for Laborer

Albany	Burns	Hermiston	Roseburg
Astoria	Coos Bay	Klamath Falls	Salem
Baker City	Eugene	Medford	The Dalles
Bend	Grants Pass	Portland	

Note: All job or project locations shall be computed (determined) on the basis of road miles and in the following manner. A mileage measurement will start at the entrance to the respective city hall, facing the project (if possible), and shall proceed by the normal route (shortest time, best road) to the geographical center on the highway, railroad, and street construction projects (end of measurement). On all other project contracts, the geographical center where the major portion of the construction is located, shall be considered the center of the project (end measurement).

LIMITED ENERGY ELECTRICIAN

Area 1	**21.00**	**11.41**

Reference Counties Area 1

Malheur

Area 2	**30.14**	**14.06**

Reference Counties Area 2

Baker	Grant	Umatilla	Wallowa
Gilliam	Morrow	Union	Wheeler

LIMITED ENERGY ELECTRICIAN (continued)

Area 3	**31.68**	**17.73**

Reference Counties Area 3

Coos	Douglas (a)	Lincoln
Curry	Lane (a)	

(a) Those portions of Lane and Douglas lying **west** of a line running North and South from the NE corner of Coos County to the SE corner of Lincoln County.

Area 4	**33.93**	**14.72**

Reference Counties Area 4

Benton	Jefferson	Marion
Crook	Lane (b)	Polk
Deschutes	Linn	Yamhill (c)

(b) That portion of Lane County lying **east** of a line running North and South from the NE corner of Coos County to the SE corner of Lincoln County.

(c) South half

Area 5	**38.87**	**21.55**

Reference Counties Area 5

Clackamas	Hood River	Tillamook	Yamhill (d)
Clatsop	Multnomah	Wasco	
Columbia	Sherman	Washington	

(d) North Half

Area 6	**29.84**	**13.65**

Reference Counties Area 6

Douglas (e)	Jackson	Klamath
Harney	Josephine	Lake

(e) That portion of Douglas County lying **east** of a line running North and South from the NE corner of Coos County to the SE corner of Lincoln County.

TRADE	HOURLY BASE RATE	HOURLY FRINGE RATE

LINE CONSTRUCTOR

Area 1

Group 1	**60.28**	**22.11**
Group 2	**53.82**	**21.82**
Group 3	**30.65**	**13.72**
Group 4	**46.29**	**18.28**
Group 5	**40.37**	**16.12**
Group 6	**33.37**	**15.80**
Group 7	**18.68**	**11.22**

Reference Counties Area 1

All counties except Malheur County

Area 2

Cable Splicer	**54.57**	**17.37**
Journeyman Lineman	**49.41**	**16.86**
Line Equip. Operator	**41.09**	**15.95**
Groundman	**29.17**	**13.55**

Reference County Area 2

Malheur County

MARBLE SETTER **42.20** **21.12**

(This trade is tended by "Tile, Terrazzo, & Marble Finishers")

PAINTER & DRYWALL TAPER

COMMERCIAL PAINTING	**23.94**	**13.04**
INDUSTRIAL PAINTING	**25.14**	**13.04**
BRIDGE PAINTING	**29.96**	**13.04**

(Add $0.75 to base rate for work over 60 ft. high on swing stage, mechanical climber, spider or bucket truck for all wage classifications)

DRYWALL TAPER

Zone A (Base Rate)

38.48 **16.71**

PAINTER & DRYWALL TAPER (continued)

Zone Differential for Drywall Taper
(Add to Zone A Base Rate)

Zone B	**6.00** per hour
Zone C	**9.00** per hour
Zone D	**12.00** per hour

Dispatch Cities for Drywall Taper

Albany	Coquille	Medford	Roseburg
Astoria	Eugene	Newport	Salem
Baker	Grants Pass	North Bend	Seaside
Bandon	Hermiston	Pendleton	The Dalles
Bend	Klamath Falls	Portland	Tillamook
Brookings	Kelso-Longview	Reedsport	Vancouver

Zone A: Projects located less than 61 miles of the respective city hall of the dispatch cities listed.
Zone B: Projects located 61 miles to 80 miles.
Zone C: Projects located 81 miles to 100 miles.
Zone D: Projects located 101 miles or more.

Note: Zone pay is based on AAA Road Mileage.

PLASTERER AND STUCCO MASON

(This trade is tended by "Tenders to Plasterers")

Zone A (Base Rate)

Plasterer	**38.09**	**18.83**
Swinging Scaffold	**39.09**	**18.83**
Nozzleman	**40.09**	**18.83**

Zone Differential for Plasterer and Stucco Mason
(Add to Zone A Base Rate)

Zone B	**6.00** per hour
Zone C	**9.00** per hour
Zone D	**12.00** per hour

See Zone Differential mileage on page 46

TRADE	HOURLY BASE RATE	HOURLY FRINGE RATE

PLASTERER AND STUCCO MASON (continued)

Zone A: Projects located less than 61 miles of the respective city hall of the reference cities listed below.
Zone B: Projects located 61 miles to 80 miles.
Zone C: Projects located 81 miles to 100 miles.
Zone D: Projects located 101 miles or more.

Reference Cities for Plasterer & Stucco Mason

Bend	Medford	Seaside
Coos Bay	Newport	The Dalles
Eugene	Portland	
La Grande	Salem	

PLUMBER/PIPEFITTER/STEAMFITTER

Area 1	**31.00**	**15.57**

Reference Counties Area 1

Baker	Harney (a)	Malheur

(a) Except that portion which lies North and West of a North-South line drawn from the town of John Day to a point five miles east of the town of Burns and three miles South of Burns thence on an airline through the town of Wagontire West to the county line.

(Add $2.21 to base rate if it is possible for worker to fall 30 ft. or more, or if required to wear a fresh-air mask or similar equipment for 2 hours or more)

Zone Differential for Area 1
Plumbers/Pipefitters/Steamfitters
(Add to Base Rate)

Zone 1	**2.50** per hour
Zone 2	**3.50** per hour
Zone 3	**5.00** per hour

Zone mileage based on road miles:
Zone 1: Forty (40) to fifty five (55) miles from City Hall in Boise, Idaho.
Zone 2: Fifty five (55) to one hundred (100) miles from City Hall in Boise, Idaho.
Zone 3: Over one hundred (100) miles from City Hall in Boise, Idaho.

There shall be a maximum of ten (10) hours of zone pay per workday.

PLUMBER/PIPEFITTER/STEAMFITTER (continued)

Area 2	**52.20**	**32.50**

Reference Counties Area 2

Grant	Umatilla	Wallowa
Morrow	Union	

Zone Differential for Area 2
(Add to Base Rate)

Zone 2 **10.62**/hr. not to exceed $80.00 day.

Zone mileage based on road miles:

Zone 2: Eighty (80) miles or more from City Hall in Pasco, Washington.

(Add $1.00 to base rate if it is possible for worker to fall 35 ft. or more, or if required to wear a fresh-air mask or similar equipment for 1 hour minimum increments)

Area 3	**47.43**	**32.73**

Reference Counties Area 3

Benton	Deschutes	Klamath	Polk
Clackamas	Douglas	Lake	Sherman
Clatsop	Gilliam	Lane	Tillamook
Columbia	Hood River	Lincoln	Wasco
Coos	Jackson	Linn	Washington
Crook	Jefferson	Marion	Wheeler
Curry	Josephine	Multnomah	Yamhill

POWER EQUIPMENT OPERATOR

Zone 1 (Base Rate)

Group 1	**45.90**	**15.35**
Group 1A	**48.06**	**15.35**
Group 1B	**50.22**	**15.35**
Group 2	**43.99**	**15.35**
Group 3	**42.84**	**15.35**
Group 4	**41.01**	**15.35**
Group 5	**39.77**	**15.35**
Group 6	**36.55**	**15.35**

(Group 4 Tunnel Boring Machine Mechanic add $10.00/hour hyperbaric pay)

See Zone Differential on page 47

POWER EQUIPMENT OPERATOR (continued)

Note: A Hazardous Waste Removal Differential must be added to the base rate if work is performed inside the boundary of a Federally Designated Waste Site. For information on this differential, call the Prevailing Wage Rate Coordinator at (971) 673-0839.

(Add $0.40 to the base rate for any and all work performed underground, including operating, servicing and repairing of equipment)

(Add $0.50 to the base rate per hour for any employee who works suspended by a rope or cable)

(Add $0.50 to the base rate for employees who do "pioneer" work (break open a cut, build road, etc.) more than one hundred fifty (150) feet above grade elevation)

Shift Differential

Two-Shift Operations:

On a two shift operation, when the second shift starts after 4:30 p.m., second-shift workers shall be paid the base hourly wage rate plus 5% for all hours worked.

When the second shift starts at 8:00 p.m. or later, the second-shift workers shall be paid at the base hourly wage rate plus 10% for all hours worked.

Three-Shift Operations:

On a three-shift operation, the base hourly wage rate plus five percent (5%) shall be paid to all second-shift workers for all hours worked, and the base hourly wage rate plus ten percent (10%) shall be paid to all third shift workers for all hours worked.

Zone Pay Differential for Power Equipment Operator
(Add to Zone 1 Base Rate)

Zone 2	**3.00** per hour
Zone 3	**6.00** per hour

For projects in the following metropolitan counties:

Clackamas	Marion	Washington
Columbia	Multnomah	Yamhill

POWER EQUIPMENT OPERATOR (continued)

See map on page 51 for Zone 1 of this classification

(A) All jobs or projects located in Multnomah, Clackamas and Marion counties, West of the western boundary of Mt. Hood National Forest and West of Mile Post 30 on Interstate 84 and West of Mile Post 30 on State Hwy 26 and West of Mile Post 30 on Hwy 22 and all jobs located in Yamhill County, Washington County and Columbia County shall receive Zone 1 pay for all classifications.

(B) All jobs or projects located in the area outside the *identified boundary* above, but less than 50 miles from the Portland City Hall shall receive Zone 2 pay for all classifications.

(C) All jobs or projects located more than 50 miles from the Portland City Hall, but outside the identified border above, shall receive Zone 3 pay for all classifications.

Reference cities for projects in all remaining counties:

Albany	Coos Bay	Grants Pass	Medford
Bend	Eugene	Klamath Falls	Roseburg

(A) All jobs or projects located within 30 miles of the respective city hall of the above mentioned cities shall receive Zone 1 pay for all classifications.

(B) All jobs or projects located more than 30 miles and less than 50 miles from the respective city hall of the above mentioned cities shall receive Zone 2 for all classifications.

(C) All jobs or projects located more than 50 miles from the respective city hall of the above mentioned cities shall receive Zone 3 pay for all classifications.

Note: All job or project locations shall be computed (determined) on the basis of road miles and in the following manner. A mileage measurement will start at the entrance to the respective city hall, facing the project (if possible), and shall proceed by the normal route (shortest time-best road) to the geographical center on the highway, railroad, and street construction projects (end of measurement). On all other project contracts, the geographical center where the major portion of the construction is located, shall be considered the center of the project (end measurement).

TRADE	HOURLY BASE RATE	HOURLY FRINGE RATE

ROOFER

Area 1

Roofer	**36.23**	**19.77**
Handling coal tar pitch	**39.85**	**19.77**
Remove fiberglass insulation	**39.85**	**19.77**

Reference Counties Area 1

Baker	Gilliam	Multnomah	Washington
Clackamas	Grant	Sherman	Wheeler
Clatsop	Hood River	Tillamook	
Columbia	Jefferson	Wasco	

Area 2

Roofer	**30.87**	**16.04**
Handling coal tar pitch	**32.87**	**16.04**
Remove fiberglass insulation	**32.37**	**16.04**

Reference Counties Area 2

Benton	Douglas	Lake	Marion
Coos	Harney	Lane	Polk
Crook	Jackson	Lincoln	Yamhill
Curry	Josephine	Linn	
Deschutes	Klamath	Malheur	

Area 4

Roofers	**28.93**	**13.01**

Reference Counties Area 4

Umatilla Union Wallowa

(Add $2.00 to basic hourly rate for employees working with irritable bituminous materials)

(Add $2.00 to basic hourly rate for employees removing fiberglass insulation)

Area 5

Roofers	**29.10**	**12.81**

Reference County for Area 5

Morrow

(Add $3.00 to base rate for employees working with irritable and pitch bituminous materials)

SHEET METAL WORKER

Area 1 — 42.30 — 23.13

Reference Counties Area 1

Benton	Grant	Multnomah	Washington
Clackamas	Hood River	Polk	Wheeler
Clatsop	Lincoln	Sherman	Yamhill
Columbia	Linn	Tillamook	
Gilliam	Marion	Wasco	

(Add $1.00 to base rate for work performed on any swinging platform, swinging chair or swinging ladder)

(Add $1.00 to base rate for work where a worker is exposed to resins, chemicals or acid)

Area 2 — 27.25 — 19.26

Reference Counties Area 2

Baker Malheur

(Add $1.75 to base rate for work performed in an area where epoxy resins or other injurious chemicals are being applied)

Area 3 — 41.65 — 21.82

Reference Counties Area 3

Morrow Umatilla Union Wallowa

(Add $1.00 to base rate for work where it is necessary to wear a chemically activated type face mask)

Area 4 — 34.98 — 20.79

Reference Counties Area 4

Douglas Lane

(Add $1.00 to base rate for work performed on any swinging platform, swinging chair or swinging ladder)

(Add $1.00 to base rate for work where a worker is exposed to resins, chemicals or acid)

TRADE	HOURLY BASE RATE	HOURLY FRINGE RATE

SHEET METAL WORKER (continued)

Area 5 **35.30** **21.81**

Reference Counties Area 5

Coos

(Add $1.00 to base rate for work performed on any swinging platform, swinging chair or swinging ladder)

(Add $1.00 to base rate for work where a worker is exposed to resins, chemicals or acid)

Area 6 **29.74** **19.70**

Reference Counties Area 6

Curry	Jackson	Klamath
Harney	Josephine	Lake

(Add $1.00 to base rate for work performed on any swinging platform, swinging chair or swinging ladder)

(Add $1.00 to base rate for work where a worker is exposed to resins, chemicals or acid)

Area 7 **32.66** **19.44**

Reference Counties Area 7

Crook	Deschutes	Jefferson

(Add $1.00 to base rate for work performed on any swinging platform, swinging chair or swinging ladder)

(Add $1.00 to base rate for work where a worker is exposed to resins, chemicals or acid)

SOFT FLOOR LAYER **31.86** **19.14**

SPRINKLER FITTER

Area 1 **40.71** **24.78**

Reference Counties Area 1

Benton	Deschutes	Klamath	Polk
Clackamas	Douglas	Lake	Sherman
Clatsop	Harney	Lane	Tillamook
Columbia	Hood River	Lincoln	Wasco
Coos	Jackson	Linn	Washington
Crook	Jefferson	Marion	Wheeler
Curry	Josephine	Multnomah	Yamhill

SPRINKLER FITTER (continued)

Area 2 **34.82** **24.77**

Reference Counties Area 2

Baker	Grant	Morrow	Union
Gilliam	Malheur	Umatilla	Wallowa

TENDER TO MASON TRADES (Brick and Stonemason, Mortar Mixer, Hod Carrier)

34.89 **15.40**

(Add $0.50 to base rate for Refractory work)

TENDER TO PLASTERER AND STUCCO MASON

Zone A (Base Rate)
34.62 **15.40**

Zone Differential for Tender to Plasterer and Stucco Mason
(Add to Zone A Base Rate)

Zone B	**.85** per hour
Zone C	**1.25** per hour
Zone D	**1.70** per hour
Zone E	**2.00** per hour
Zone F	**3.00** per hour
Zone G	**5.00** per hour

Zone A: Projects located within 30 miles of city hall in the reference cities listed.
Zone B: More than 30 miles but less than 40 miles.
Zone C: More than 40 miles but less than 50 miles.
Zone D: More than 50 miles but less than 60 miles.
Zone E: More than 60 miles but less than 70 miles.
Zone F: More than 70 miles but less than 100 miles.
Zone G: More than 100 miles.

Reference Cities

Astoria	Coos Bay	Medford	Roseburg
Bend	Eugene	Pendleton	Salem
Corvallis	Klamath Falls	Portland	The Dalles

(Add $0.50 to base rate for Refractory work)

TRADE	HOURLY BASE RATE	HOURLY FRINGE RATE

TESTING AND BALANCING (TAB) TECHNICIAN

Air-Handling Equipment, Ductwork

See SHEET METAL WORKER

Water Distribution Systems

See PLUMBER/PIPEFITTER/STEAMFITTER

TILESETTER/TERRAZZO WORKER: Hard Tilesetter

	35.35	**19.36**

(This trade is tended by "Tile, Terrazzo, & Marble Finisher")

(Add $1.00 to base rate if work involves epoxy, furnane, alkor or acetylene black grouting)

TILE, TERRAZZO, AND MARBLE FINISHER

1. TILE, TERRAZZO FINISHER

	26.94	**14.11**

(Add $1.00 to base rate if work involves epoxy, furnane, alkor or acetylene black grouting)

2. BRICK AND MARBLE FINISHER

	26.94	**14.24**

(Add $1.00 to base rate for Refractory work)

TRUCK DRIVER

Zone A (Base Rate)

Group 1	**29.33**	**16.35**
Group 2	**29.46**	**16.35**
Group 3	**29.60**	**16.35**
Group 4	**29.89**	**16.35**
Group 5	**30.13**	**16.35**
Group 6	**30.31**	**16.35**
Group 7	**30.53**	**16.35**

Zone differential for Truck Drivers
(Add to Zone A Base Rate)

Zone B	**.65** per hour
Zone C	**1.15** per hour
Zone D	**1.70** per hour
Zone E	**2.75** per hour

TRUCK DRIVER (continued)

Zone A: Projects within 30 miles of the cities listed.
Zone B: More than 30 miles but less than 40 miles.
Zone C: More than 40 miles but less than 50 miles.
Zone D: More than 50 miles but less than 80 miles.
Zone E: More than 80 miles.

Reference Cities

Albany	Eugene	Madras	Reedsport
Astoria	Goldendale	Medford	Roseburg
Baker	Grants Pass	McMinnville	Salem
Bend	Hermiston	Newport	The Dalles
Bingen	Hood River	Ontario	Tillamook
Brookings	Klamath Falls	Oregon City	Vancouver
Burns	LaGrande	Pendleton	
Coos Bay	Lakeview	Portland	
Corvallis	Longview	Port Orford	

Note: All job or project locations shall be computed (determined) on the basis of road miles and in the following manner. A mileage measurement will start at the entrance to the respective city hall, facing the project (if possible), and shall proceed by the normal route (shortest time-best road) to the geographical center on the highway, railroad, and street construction projects (end of measurement). On all other project contracts, the geographical center where the major portion of the construction is located, shall be considered the center of the project (end measurement).

TRADE	HOURLY BASE RATE	HOURLY FRINGE RATE	TRADE	HOURLY BASE RATE	HOURLY FRINGE RATE

POWER EQUIPMENT OPERATOR

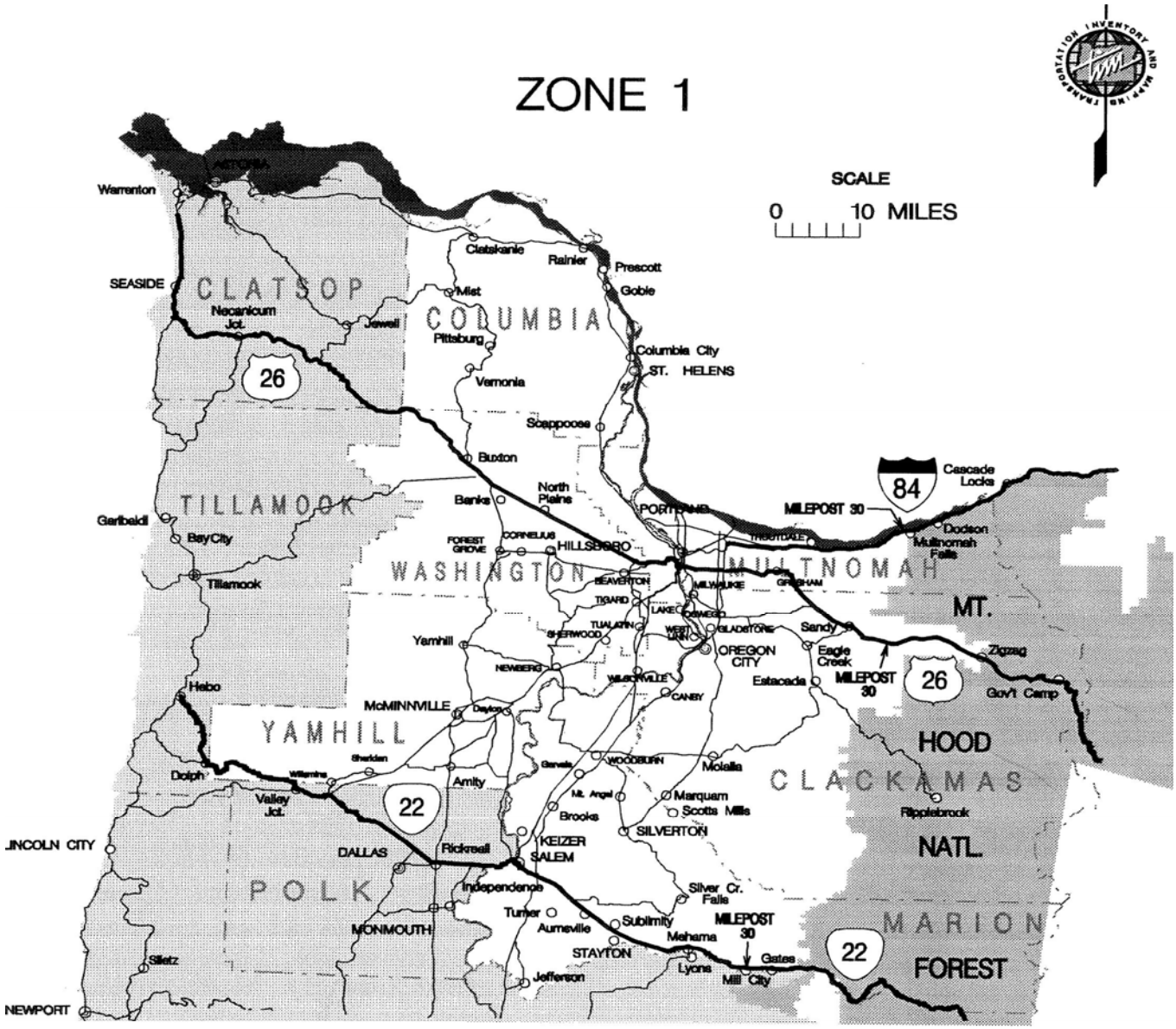

LIST OF CONTRACTORS INELIGIBLE
TO RECEIVE PUBLIC WORKS CONTRACTS
PUBLICATION DATE: JULY 1, 2020

To: All Oregon Contracting Agencies

Pursuant to ORS 279C.860, contractors on this list are ineligible to receive public works contracts subject to the Prevailing Wage Rate Law. These contractors and subcontractors, as well as any firm, corporation, partnership or association in which the contractor or subcontractor has a financial interest are ineligible to receive public works contracts until removed from this list.

If you have questions regarding the list or for the most current information regarding persons ineligible to receive prevailing wage contracts, please contact the Prevailing Wage Rate Coordinator in Portland at (971) 673-0839.

	CONTRACTOR NAME	DATE PLACED	REMOVAL DATE
1.	**A1 Dumptruck Services LLC** 703 N Hayden Meadows Dr., #206 Portland, OR 97213 731 N Hayden Meadows Dr., #206 Portland, OR 97217 2408 NE 164th Avenue Vancouver, WA 98684	February 24, 2020	February 23, 2027
2.	**Atilla, Inc.** 5305 River Road N., Ste. B Keizer, OR 97303	August 3, 2018	August 2, 2021
3.	**Kimberly Bell-Eddy** 8535 Woodard Ave SE Salem, OR 97317	January 12, 2016	January 11, 2023
4.	**Cameron Creations** **Steven Cameron** **Nancy Cameron** PO Box 2 Lowell, OR 97452	May 25, 2000	Not to be Removed
5.	**Gentry Ceniga** 20949 Knott Road Bend, OR 97702	August 14, 2018	August 13, 2021
6.	**G & K Masonry Inc.** 20949 Knott Road Bend, OR 97702	August 14, 2018	August 13, 2021
7.	**GNC Construction Services, LLC** 309 S. McLoughlin Blvd. Oregon City, OR 97045	July 21, 2015 July 21, 2018	July 20, 2018 July 20, 2021
8.	**Eugene Graeme** 169 SE Cody Lane Madras, OR 97741	July 3, 2017	July 2, 2027
9.	**High-N-Shine Concrete Floor, Inc.** 9024 Silver Star Ave Vancouver, WA 98664	February 3, 2020	February 2,2023

	CONTRACTOR NAME	DATE PLACED	REMOVAL DATE
10.	**Lisa Hoang,** **aka Kim Lien Hoang,** **aka Lien Kim Hoang,** **aka Kim Hope,** **aka Lisa K Ryan,** **aka Ryan Lien Hoang,** **aka Kim L Hoang,** **aka Lien Hoang Ryan,** **aka Lien K Hoang-Ryan,** **aka Hoang K Lien,** **aka Lisa Hall,** **aka Lisa Kim Ryan,** **aka Lien Ryan,** **aka Lien Hoang Ryan,** **aka Kim Hoang Lien,** **aka K Lisa Hoang** 703 N Hayden Meadows Dr., #206 Portland, OR 97213 731 N Hayden Meadows Dr., #206 Portland, OR 97217 2408 NE 164th Avenue Vancouver, WA 98684	February 24, 2020	February 23, 2027
11.	**Kim Bell Flagging, Inc.** 8535 Woodard Ave SE Salem, OR 97317	January 12, 2016	January 11, 2023
12.	**Sang In Nam dba** **Cornerstone Janitorial Services** 130 NE Danbury Ave Hillsboro, OR 97124	September 20, 2016	Not to be Removed
13.	**David P. Miller** 731 NW Natio Parkway, #215 Portland, OR 97209	June 17, 2020	Not to be Removed
14.	**Hai T. Nguyen** 9024 Silver Star Ave Vancouver, WA 98664	February 3, 2020	February 2, 2023
15.	**NW Flagging LLC** 703 N Hayden Meadows Dr., #206 Portland, OR 97213 731 N Hayden Meadows Dr., #206 Portland, OR 97217 2408 NE 164th Avenue Vancouver, WA 98684	February 24, 2020	February 23, 2027
16.	**Oregon Building & Landscaping Services LLC** 703 N Hayden Meadows Dr., #206 Portland, OR 97213 731 N Hayden Meadows Dr., #206 Portland, OR 97217 2408 NE 164th Avenue Vancouver, WA 98684	February 24, 2020	February 23, 2027

	CONTRACTOR NAME	DATE PLACED	REMOVAL DATE
17.	**Pacific NW Drywall & Accoustics LLC** **aka Pacific NW Drywall & Accoustics** 731 NW Natio Parkway, #215 Portland, OR 97209	June 17, 2020	Not to be Removed
18.	**Phoenix Construction Group, Inc.** 309 S. McLoughlin Blvd. Oregon City, OR 97045	August 24, 2015 August 24, 2018	August 23, 2018 August 23, 2021
19.	**Pacharee Polson** 9024 Silver Star Ave Vancouver, WA 98664	February 3, 2020	February 2, 2023
20.	**Portland Safety Equipment, LLC** 309 S. McLoughlin Blvd. Oregon City, OR 97045	August 24, 2015 August 24, 2018	August 23, 2018 August 23, 2021
21.	**R.B. Development Corporation Inc.** 14634 Kasel Court NE Aurora, OR 97002	August 3, 2018	August 2, 2021
22.	**Regional Traffic Management LLC** 703 N Hayden Meadows Dr., #206 Portland, OR 97213 731 N Hayden Meadows Dr., #206 Portland, OR 97217 2408 NE 164th Avenue Vancouver, WA 98684	February 24, 2020	February 23, 2027
23.	**SBG Construction Services LLC** 309 S. McLoughlin Blvd. Oregon City, OR 97045	August 24, 2015 August 24, 2018	August 23, 2018 August 23, 2021
24.	**Cassie Seeley** 7991 Little Rd. SE Aumsville, OR 97325-9497	July 13, 2017	July 12, 2020
25.	**Irma Anita Starr** 14634 Kasel Court NE Aurora, OR 97002	August 3, 2018	August 2, 2021
26.	**Norman James Starr** 14634 Kasel Court NE Aurora, OR 97002	August 3, 2018	August 2, 2021
27.	**Alan Tatom** 168 Clearwater Avenue NE Salem, OR 97301	July 10, 2015	July 9, 2025
28.	**Phillip Walker** 580 Market Street NE Salem, OR 97301	July 10, 2015	July 9, 2025

LIST OF CONTRACTORS INELIGIBLE
TO RECEIVE PUBLIC WORKS CONTRACTS
PUBLICATION DATE: JULY 1, 2020

	CONTRACTOR NAME	DATE PLACED	REMOVAL DATE
29.	**WCI Construction LLC** 169 SE Cody Lane Madras, OR 97741	July 3, 2017	July 2, 2027
30.	**WWJD Traffic Control, Inc.** 168 Clearwater Avenue NE Salem, OR 97301	July 10, 2015	July 9, 2025

VAL HOYLE, COMMISSIONER
BUREAU OF LABOR AND INDUSTRIES

PREVAILING WAGE RATE FORMS

WH-38	**Certified Payroll Form**
WH-39	**Public Works Fee Information Form**
WH-40	**Public Works Fee Adjustment Form**
WH-81	**Notice of Public Works**
WH-118	**Planned Public Improvement Summary**
WH-119	**Capital Improvement Cost Comparison Estimate**

BUREAU OF LABOR & INDUSTRIES, PREVAILING WAGE RATE

INSTRUCTIONS FOR COMPLETING THE PREVAILING WAGE RATE PAYROLL/CERTIFIED STATEMENT FORM (WH-38)

The Payroll/Certified Statement form (WH-38) may be used by contractors for reporting their payroll as required by ORS 279C.845 on public works projects subject to the Prevailing Wage Rate (PWR) Law. Although the U.S. Department of Labor (US DOL) has not officially approved this form, it is designed to meet the requirements of the federal Davis-Bacon Act. For projects associated with the U.S. Department of Housing and Urban Development (HUD), contact the public agency (owner) associated with the project for assistance with payroll reporting.

Contractors are not required to use the WH-38 form in reporting their payroll; however, the contractor must provide all of the information contained in the form, including the certified statement on page two. The contractor must sign the certified statement, certifying the accuracy of the information reported on the payroll, including representations pertaining to the provision of fringe benefits to employees by third parties, and submit it with each weekly payroll report. Detailed instructions concerning the preparation of the form follow:

Complete the top third of the form. Be sure to enter the date the contract was first advertised for bid. If you are not sure of this date, contact the public agency (owner) associated with the project. The "Payroll No." is a US DOL requirement and represents the number of weeks the contractor performed work on the project.

Column 1 – NAME AND ADDRESS: Write the employee's full name on each payroll submitted. The employee's address must be included on the first payroll submitted. The address need not be shown on subsequent payrolls submitted unless the address changes. The US DOL requires an employee identification number for each individual employee, on each payroll submitted. This number may be, but does not have to be, the last four digits of the employee's social security number.

Column 2 – CLASSIFICATION: For assistance in determining the correct classification, use the Bureau of Labor & Industries' (BOLI's) publication "Definitions of Covered Occupations for Public Works Contracts in Oregon." On the WH-38, list the classification that is most descriptive of the work actually performed by the employee. Give the group number for those classifications that include such information. Indicate which workers are apprentices, if any, and give their current percentage, classification, and group number when applicable. If an employee works in more than one classification, use the highest rate for all hours worked, or use separate line entries to show hours worked and hourly rates for each classification.

Column 3 – DAY AND DATE: Enter the day of the week (M, T, W, Th, F, S, and Sn) in the top row of boxes, and the corresponding date below.

HOURS WORKED EACH DAY: Enter the total number of straight time hours worked in the row marked "ST." Generally, hours worked over eight (8) in a day or work performed on Saturdays, Sundays, and legal holidays should be entered as overtime ("OT") hours worked. Contractors who have adopted and followed a written work schedule of four consecutive ten-hour days (Monday through Thursday or Tuesday through Friday) may enter hours worked over ten (10) in a day as overtime hours. For more information on overtime requirements, see the Contractor Responsibilities section of OR L&I's publication, "*Prevailing Wage Rate Laws*."

Check the correct work schedule box to indicate the employee's weekly work schedule: 5/8 or 4/10. Enter the employee's regular hourly schedule for the week being reported next to the "Reg. Hrly. Schd:_____to_____." For example: 7:00 a.m. to 4:30 p.m.

Column 4 – TOTAL HOURS: Enter separately the total number of straight time and overtime hours worked by the employee (in each classification, if applicable) on the PWR project during the week. Enter the total number of straight time hours worked in the lower box ("ST"); enter the total number of overtime hours worked in the top box ("OT").

Column 5 – HOURLY BASE RATE: Enter the hourly base rate (plus zone pay, if any) and the hourly overtime rate (plus zone pay, if any) paid to the employee in the appropriate straight time and overtime

boxes. (Payment of not less than one and one half times the base rate of pay, including zone pay, but not including fringe benefits, is required to be paid for overtime hours pursuant to ORS 279C.540). Generally, use the appropriate prevailing wage rates in effect at the time the project was first advertised for bid by the public agency. If this date is not known, or if the project was not advertised for bid, contact the public agency (owner) associated with the project for assistance with applicable rates.

Column 6 – HOURLY FRINGE BENEFIT AMOUNT PAID AS WAGES TO THE EMPLOYEE: Enter hourly fringe benefit amounts paid directly to the employee as wages. (For overtime hours worked, it is not necessary to pay time and one half for the fringe benefit portion of the prevailing wage rate.)

Column 7 – GROSS AMOUNT EARNED: Enter the gross amount earned for work on the PWR project during the week. If part of the employee's wages for the pay period were earned on projects other than the project described on the WH-38, or if the employee is paid less often than on a weekly basis, enter in column 7 first the gross amount earned on the PWR project for the week, then the total gross amount earned for the pay period. For example: $567.84 / $1,267.27.

Column 8 – ITEMIZED DEDUCTIONS, FICA, FED, STATE, ETC.: Enter deductions withheld from wages for the pay period. All deductions must be in accordance with the provisions of ORS 652.610 (and as defined in Regulations, Part 3 (29 CFR Subtitle A), issued by the Secretary of Labor under the Copeland Act, as amended (48 Stat. 948, 63 Stat. 108, 72 Stat. Stat. 967, 76 Stat. 357; 40 U.S.C 276c) on projects subject to Davis-Bacon Act). For projects subject to the Davis-Bacon Act, itemize the deductions.

Column 9 – NET WAGES PAID: Enter the total amount of net wages actually paid to the employee for the pay period. Calculate this figure by subtracting the total deductions reported in Column 8 from the gross amount of wages for the pay period reported in the bottom portion of Column 7.

Column 10 – HOURLY FRINGE BENEFITS PAID TO BENEFIT PARTY, PLAN, FUND OR PROGRAM: Enter the hourly amount of fringe benefits paid to each individually approved party, plan, fund, or program, for each employee. List these amounts separately on the lines provided. Any contractor who is making payments to approved parties, plans, funds or programs in amounts less than the required hourly fringe benefit is obligated to pay the difference directly to the employee as wages in lieu of fringe benefits, and to show that amount in Column 6 of this form. For information on how to calculate hourly fringe benefit credits, see Appendix A in OR L&I's publication, "*Prevailing Wage Rate Laws*."

Column 11 – NAME OF BENEFIT PARTY, PLAN, FUND OR PROGRAM: Enter the name of the party, plan, fund, or program that corresponds to the amount paid as an hourly fringe benefit in Column 10.

CALCULATION CHECK

In order to determine whether the wages and fringe benefits paid are sufficient to meet prevailing wage rate requirements, perform the following check:

1. For each classification listed in column 2, compute the sum of:
   a) the hourly base rate of pay shown in Column 5,
   b) the hourly fringe benefit amount paid as wages to employee shown in Column 6, and
   c) the hourly fringe benefits paid to benefit party, plan, fund or program shown in Column 10.

2. This sum must equal or exceed the total of the hourly base rate (including zone pay) and the hourly fringe benefit rate for that classification as listed in the appropriate issue of OR L&I's publication, *Prevailing Wage Rates for Public Works Contracts in Oregon*.

IF YOU HAVE QUESTIONS REGARDING COMPLETION OF THIS FORM, CONTACT THE PREVAILING WAGE RATE UNIT OF THE BUREAU OF LABOR & INDUSTRIES AT (971) 673-0838.

NOTE: PAYROLL/CERTIFIED STATEMENTS ARE ONLY REQUIRED TO BE SUBMITTED TO THE PUBLIC AGENCY ASSOCIATED WITH THE PROJECT.

CERTIFIED PAYROLL AND OTHER FORMS ARE AVAILABLE ON OUR WEBSITE: WWW.OREGON.GOV/BOLI

BUREAU OF LABOR AND INDUSTRIES
WAGE AND HOUR DIVISION

PAYROLL/CERTIFIED STATEMENT FORM WH-38
FOR USE IN COMPLYING WITH ORS 279C.845*

PRIME CONTRACTOR ☐ SUBCONTRACTOR ☐ PAYROLL NO.______________________ FINAL PAYROLL ☐

Business Name (DBA): Phone: (   ) CCB Registration Number:

Project Name: Project Number: Type of Work:

Street Address:

Mailing Address:

Project Location:

Project County:

Date Pay Period Began: Date Pay Period Ended:

THIS SECTION FOR PRIME CONTRACTORS ONLY

Public Contracting Agency Name:
Phone: (   )
Date Contract Specifications First Advertised for Bid:
Contract Amount:

THIS SECTION FOR SUBCONTRACTORS ONLY

Subcontract Amount:
Prime Contractor Business Name (DBA):
Prime Contractor Phone: (   )
Prime Contractor's CCB Registration Number:
Date You Began Work on the Project:

(1)	(2)		(3) DAY AND DATE							(4)	(5)	(6)	(7)	(8)	(9)	(10)	(11)
NAME , ADDRESS AND EMPLOYEE'S IDENTIFICATION NUMBER	CLASSIFICATION (INCLUDE GROUP # AND APPRENTICESHIP STEP IF APPLICABLE)									TOTAL HOURS	HOURLY BASE RATE	HOURLY FRINGE BENEFIT AMOUNTS PAID AS WAGES TO EMPLOYEE	GROSS AMOUNT EARNED (see directions)	ITEMIZED DEDUCTIONS FICA, FED, STATE, ETC.	NET WAGES PAID	HOURLY FRINGE BENEFITS PAID TO BENEFIT PARTY, PLAN, FUND, OR PROGRAM	NAME OF BENEFIT PARTY, PLAN, FUND, OR PROGRAM
			HOURS WORKED EACH DAY														
		OT															
		ST															
		Schedule: 5/8 ☐ 4/10 ☐; Reg. Hrly. Schd: _____to_____.															
		OT															
		ST															
		Schedule: 5/8 ☐ 4/10 ☐; Reg. Hrly. Schd: _____to_____.															
		OT															
		ST															
		Schedule: 5/8 ☐ 4/10 ☐; Reg. Hrly. Schd: _____to_____.															
		OT															
		ST															
		Schedule: 5/8 ☐ 4/10 ☐; Reg. Hrly. Schd: _____to_____.															
		OT															
		ST															
		Schedule: 5/8 ☐ 4/10 ☐; Reg. Hrly. Schd: _____to_____.															

*Although this form has not been officially approved by the U.S. Department of Labor, it is designed to meet the requirements of both the state PWR law and the federal Davis-Bacon Act.

THIS FORM CONTINUED ON REVERSE

CERTIFIED STATEMENT

Date: _____

I, _____, _____
(NAME OF SIGNATORY PARTY) (TITLE)
do hereby state:
(1) That I pay or supervise the payment of the persons employed by:

_____
(CONTRACTOR, SUBCONTRACTOR OR SURETY)
on the _____; that during the payroll period
(BUILDING OR WORK)
commencing on the _____ day of _____, _____, and ending the _____ day
(MONTH) (YEAR)
of _____, _____, all persons employed on said project have been paid the
(MONTH) (YEAR)
full weekly wages earned, that no rebates have been or will be made either directly or indirectly to or on behalf of said _____
(CONTRACTOR, SUBCONTRACTOR OR SURETY)
from the full weekly wages earned by any person, and that no deductions have been made either directly or indirectly from the full wages earned by any person, other than permissible deductions as specified in ORS 652.610, and as defined in Regulations, Part 3 (29 CFR Subtitle A), issued by the Secretary of Labor under the Copeland Act, as amended (48 Stat. 948, 63 Stat. 108, 72 Stat. 967; 76 Stat. 357; 40 U.S.C. 276c), and described below:

_____

(2) That any payrolls otherwise under this contract required to be submitted for the above period are correct and complete; that the wage rates for workers contained therein are not less than the applicable wage rates contained in any wage determination incorporated into the contract; that the classifications set forth therein for each worker conform with work performed.

(3) That any apprentices employed in the above period are duly registered in a bona fide apprenticeship program registered with a state apprenticeship agency recognized by the Bureau of Apprenticeship and Training, United States Department of Labor, or if no such recognized agency exists in a state, are registered with the Bureau of Apprenticeship and Training, United States Department of Labor.

I HAVE READ THIS CERTIFIED STATEMENT, KNOW THE CONTENTS THEREOF AND IT IS TRUE TO MY KNOWLEDGE:

_____
(NAME AND TITLE)

_____
(SIGNATURE AND DATE)

In addition to completing sections (1) - (3), if your project is subject to the federal Davis-Bacon Act requirements, complete the following section as well:

(4) That:
(a) WHERE FRINGE BENEFITS ARE PAID TO APPROVED PLANS, FUNDS OR PROGRAMS

☐ - In addition to the basic hourly wage rates paid to each laborer or mechanic listed in the above referenced payroll, payments of fringe benefits as listed in the contract have been or will be made to appropriate programs for the benefit of such employees, except as noted in Section 4(c) below.

(b) WHERE FRINGE BENEFITS ARE PAID IN CASH

☐ - Each laborer or mechanic listed in the above referenced payroll has been paid, as indicated on the payroll, an amount not less than the sum of the applicable basic hourly wage rate plus the amount of the required fringe benefits as listed in the contract, except as noted in Section 4(c) below.

(c) EXCEPTIONS:

EXCEPTION (CRAFT)	EXPLANATION

REMARKS:

NAME AND TITLE SIGNATURE

THE WILLFUL FALSIFICATION OF ANY OF THE ABOVE STATEMENTS MAY SUBJECT THE CONTRACTOR OR SUBCONTRACTOR TO CIVIL OR CRIMINAL PROSECUTION. SEE SECTION 1001 OF TITLE 18 AND SECTION 231 OF TITLE 31 OF THE UNITED STATES CODE.

FILE THIS FORM WITH THE PUBLIC AGENCY ASSOCIATED WITH THE PROJECT
NOTE TO CONTRACTORS: YOU MUST ATTACH COPIES OF THIS FORM TO EACH OF YOUR PAYROLL SUBMISSIONS ON THIS PROJECT.
INSTRUCTIONS AND ADDITIONAL FORMS ARE AVAILABLE ON OUR WEBSITE: WWW.OREGON.GOV/BOLI.

CONTRACT FEE SECTION
PREVAILING WAGE RATE UNIT
BUREAU OF LABOR & INDUSTRIES
800 N.E. OREGON ST., #1045
PORTLAND, OR 97232-3601
PHONE: (971) 673-0852
FAX: (971) 673-0769

For Office Use Only:

Project DB #:_____

PUBLIC WORKS FEE INFORMATION FORM

For use by public agencies that have contracted with a contractor on a public works project regulated by ORS 279C.800 to 279C.870, in compliance with ORS 279C.825. Also for use by public agencies that are a party to a public works project pursuant to ORS 279C.800(6)(a)(B), (C) (D) or (E).

PUBLIC AGENCIES: Please complete and mail this form to the Bureau of Labor & Industries (BOLI) at the above address, along with the public works fee of one-tenth of one percent of the contract price (contract amount x .001), payable to "Bureau of Labor and Industries." **The minimum fee is $250.00; the maximum fee is $7,500.00.** BOLI may be unable to properly credit you for payment received without the following completed information.

PUBLIC AGENCY: _____ **AGENCY #:** _____

AGENCY MAILING ADDRESS: _____

CITY, STATE, ZIP _____

AGENCY CONTACT PERSON: _____ **PHONE: ( )** _____

PROJECT MANAGER NAME: _____ **PHONE: ( )** _____

PROJECT NAME: _____

CONTRACT NAME (if part of larger project): _____

PROJECT LOCATION: _____

PROJECT NO: _____ **DATE CONTRACT FIRST ADVERTISED:** _____

DATE CONTRACT AWARDED: _____ **CONTRACTOR CCB#:** _____

CONTRACTOR BUSINESS NAME (DBA): _____

CONTRACTOR ADDRESS: _____

CITY, STATE ZIP _____

CONTRACT AMOUNT: $_____ **FEE AMOUNT DUE/PAID: $**_____

If less than $50K, is it part of a larger project? ☐ **yes** ☐ **no** **Contract amount x .001 = fee due**

(Please duplicate this form for future use.)

CONTRACT FEE SECTION
PREVAILING WAGE RATE UNIT
BUREAU OF LABOR & INDUSTRIES
800 N.E. OREGON ST., #1045
PORTLAND, OR 97232-3601
PHONE: (971) 673-0852
FAX: (971) 673-0769

For Office Use Only:

Project DB #:_____

PUBLIC WORKS FEE ADJUSTMENT FORM

USE THIS FORM FOR RECONCILIATION OF FEES UPON COMPLETION OF PUBLIC WORKS PROJECTS

(As required by ORS 279C.825 and OAR 839-025-0210)

PUBLIC AGENCIES: Complete and mail this form to the Bureau of Labor & Industries at the above address after completion of the public work project and not less than 30 days after the final progress payment is made to the contractor. Public agencies are required to determine the final contract price, including all change orders or other adjustments to the original contract price, and to calculate the adjusted prevailing wage rate fee based on the revised contract price. Documentation must be included to support the final contract price. Documentation of the final contract price may consist of change orders or other contract documents substantiating the amount of the contract. The prevailing wage rate fee of one-tenth of one percent (.001) shall be applied to the final contract price, with credit taken for fees already submitted. The public agency must submit any additional fee payable to "Bureau of Labor and Industries," or submit any request for refund, with this adjustment form. **THE MINIMUM FEE IS $250.00; THE MAXIMUM FEE IS $7,500.00. NO ADDITIONAL FEE IS REQUIRED TO BE PAID, AND REFUNDS WILL NOT BE MADE, IF THE BALANCE DUE OR THE REFUND DUE IS LESS THAN $100.00.**

PUBLIC AGENCY: _____ **AGENCY #:**_____

AGENCY CONTACT PERSON:_____ **PHONE :( )**_____

MAILING ADDRESS:_____

PROJECT NAME:_____

CONTRACT NAME (if part of larger project):_____

PROJECT NUMBER:_____ **PROJECT LOCATION:**_____

CONTRACTOR/BUSINESS NAME (DBA):_____

CONTRACTOR CCB#:_____ **DATE AWARDED:**_____

FINAL CONTRACT/PROJECT AMOUNT:_____ **FINAL FEE DUE:**_____
(Include all change orders and adjustments to the contract price) **(Final Contract amount X .001)**

ORIGINAL CONTRACT AMOUNT:_____ **INITIAL FEE PAID:**_____
(Original Contract amount X .001)

TOTAL ADJUSTMENT:_____ **BALANCE DUE*:**_____
or
REFUND DUE*:_____
***Final contract fee less initial fee paid**

Sample Calculation:			
Final Contract Amount:	**$ 400,000.00**	**Final Fee Due:**	**$ 400.00**
Original Contract Amount:	**- 300,000.00**	**Initial Fee Paid:**	**- 300.00**
Total Adjustment:	**$ 100,000.00**	**Additional Amount Due:**	**$ 100.00**

 (Please duplicate this form for future use)

BUREAU OF LABOR AND INDUSTRIES
NOTICE OF PUBLIC WORKS
(For use by public agencies in complying with ORS 279C.835)

For Office Use Only:

Project DB #:_____

NOTE: ORS 279C.835 requires that public contracting agencies include with this form a copy of the disclosure of first-tier subcontractors submitted pursuant to ORS 279C.370.

PUBLIC AGENCY INFORMATION

Agency Name: _____

Agency Division:_____ Agency # (if known):_____

Address:_____

City, State, Zip:_____

Email Address: _____

Agency Representative: _____ Phone: _____

SECTION A: To be completed when a public agency awards a contract to a contractor for a public works project, including CM/GC projects. (See reverse for public works projects in which no public agency awards a contract to a contractor.)

CONTRACT INFORMATION:

Project Name: _____

Contract Name (if part of larger project): _____

Project #: _____ Contract #:_____

Project Manager Name:_____ Phone: _____ Fax:_____

Project Location (Street(s), City): _____ Project County: _____

Date specifications first advertised for bid (if not advertised, date of RFP or first contact with contractor): _____

OR If CM/GC contract, date contract became a public works contract (see OAR 839-025-0020(8)): _____

Contract Amount: $_____

Is this contract part of a larger project? YES ☐ NO ☐ If yes, total project amount: $_____

If yes, **INITIAL** date specifications for project advertised for bid (see OAR 839-025-0020(6)(b)): _____

Will project use federal funds that require compliance with the Davis-Bacon Act? YES ☐ NO ☐

Date Contract Awarded: _____ Date Work Expected to Begin: _____ Date Work Expected to be Complete: _____

PRIME CONTRACTOR INFORMATION:

Name: _____

Address: _____

City, State Zip:_____ Phone:_____

Construction Contractors Board Registration #: _____

Name of Bonding Company for Payment Bond: _____

Address: _____

Agent Name: _____ Phone: _____ Payment Bond #: _____

☐ Copy of first-tier subcontractors attached (**see NOTE above**).

Signature of agency representative completing form: _____

Printed Name: _____ Phone: _____ Date:_____

Email Address:_____

THIS FORM WILL BE RETURNED TO THE PUBLIC AGENCY FOR CORRECTION AND RESUBMITTAL IF INCOMPLETE.

Complete this page for public works projects in which NO PUBLIC AGENCY AWARDS A CONTRACT TO A CONTRACTOR. Complete the CONTRACT INFORMATION *AND* SECTION B, C, D or E, whichever applies to the project.

CONTRACT INFORMATION:

Name of Project Owner:_____ Phone: _____

Project Name: _____ Project #: _____

Project Location (Street(s), City): _____ Project County: _____

Total Project Cost: $_____ Amount of Public Funds Provided for the Project: $_____

Name(s) of Public Agency(ies) Providing Public Funds: _____

Will project use federal funds that require compliance with the Davis-Bacon Act? YES ☐ NO ☐

Date Work Expected to Begin: _____ Date Work Expected to be Complete: _____

SECTION B: **To be completed when a project is a public works pursuant to ORS 279C.800(6)(a)(B)** (a project for the construction, reconstruction, major renovation or painting of a road, highway, building, structure or improvement of any type **that uses $750,000 or more of funds of a public agency**).

Date the public agency or agencies committed to the provision of funds for the project: _____

SECTION C: **To be completed when a project is a public works pursuant to ORS 279C.800(6)(a)(C)** (a project for the construction of a privately owned road, highway, building, structure or improvement of any type **that uses funds of a private entity and in which 25 percent or more of the square footage of the completed project will be occupied or used by a public agency**).

Total square footage of privately owned road, highway, building, structure or improvement: _____

Percent of total square footage of the completed project that will be occupied or used by a public agency: _____

Date the public agency or agencies entered into an agreement to occupy or use the completed project: _____

SECTION D: **To be completed when a project is a public works pursuant to ORS 279C.800(6)(a)(D)** (a project that includes the construction or installation of a **device, structure or mechanism that uses solar radiation** on public property, regardless of project cost or whether the project uses funds of a public agency).

Date the public agency entered into an agreement for the project: _____

SECTION E: **To be completed when a project is a public works pursuant to ORS 279C.800(6)(a)(E)** (a project for the construction, reconstruction, major renovation or painting of a road, highway, building, structure, or improvement of any type that occurs, with or without using funds of a public agency, **on real property that a public university listed in ORS 352.002 owns**).

Date the public agency entered into an agreement for the project: _____

Signature of agency representative completing form: _____

Printed Name: _____ Phone: _____ Date:_____

Email Address: _____

THIS FORM WILL BE RETURNED TO THE PUBLIC AGENCY FOR CORRECTION AND RESUBMITTAL IF INCOMPLETE.

RETURN THIS COMPLETED FORM TO:
Prevailing Wage Rate Unit • Oregon Labor & Industries • 800 NE Oregon Street, #1045 • Portland, OR 97232-3601
Telephone (971) 673-0852 • FAX (971) 673-0769 • pwremail@boli.state.or.us

PLANNED PUBLIC IMPROVEMENT SUMMARY

FISCAL YEAR: _____ - _____ _____ **PAGE** _____ **OF** _____

(Name of State or Local Government Agency)

Project Number, if applicable	Project Name	Project Location	Estimated Total On-site Construction Costs	Work Performed by Contractor or Agency?

ORS 279C.305 requires that not less than 30 days prior to adoption of its budget for the subsequent budget period, or before starting to construct a public improvement, each contracting agency shall prepare and file with the Commissioner of the Bureau of Labor and Industries a list of every public improvement that the contracting agency plans to fund in the budget period, identifying each improvement by name and estimating the total on-site construction costs. The list must also state whether the contracting agency intends to perform the construction through a private contractor. If the contracting agency intends to use the contracting agency's own equipment or personnel to perform construction work on a public improvement, and the estimated value of the construction work that the contracting agency intends to perform with the contracting agency's own equipment or personnel exceeds $200,000 (or $125,000 if the public improvement involves the resurfacing of highways, roads or streets at a depth of two or more inches), the contracting agency shall file with the commissioner not later than 180 days before construction begins on the public improvement an analysis that shows that the contracting agency's decision conforms to the state's policy that contracting agencies make every effort to construct public improvements at the least cost to the contracting agency. Public agencies are required to keep and preserve a full, true and accurate account of the costs of performing the work, including all categories of costs described in ORS 279C.305(3)(b). The final account of the costs is a public record.

Use this form (WH-118) to list planned public improvements. Use form WH-119 (Public Improvement Project Cost Analysis) to report the agency's cost analysis.

Mail completed forms to: Prevailing Wage Rate Unit
Bureau of Labor & Industries
800 N.E. Oregon St., #1045
Portland, OR 97232-2180

_____
(Name of Agency Official)

_____
(Signature of Agency Official)

PUBLIC IMPROVEMENT PROJECT COST ANALYSIS

Contracting Agency: _____ **Project Name/Number:** _____

Department: _____ **Estimated Construction Period:** _____

ESTIMATED CONTRACTOR COSTS				
Item Description	Estimated Quantity	Unit Cost	Total Estimated Cost Per Item	
				TOTAL OF ALL CONTRACTOR COSTS
				$

ESTIMATED CONTRACTING AGENCY COSTS							
Labor	Equipment	Administration and Overhead	Tools and Materials	Cost of Any Contracts Agency Must Enter	Quality Control Testing	Any Other Necessary and Related Costs	
							TOTAL OF ALL PUBLIC AGENCY COSTS
							$

The above-named agency has determined that this project can be performed at the least cost by: _____ Agency _____ Contractor (check one)

ORS 279C.305 requires that not less than 30 days prior to adoption of its budget for the subsequent budget period, or before starting to construct a public improvement, each contracting agency shall prepare and file with the Commissioner of the Bureau of Labor and Industries a list of every public improvement that the contracting agency plans to fund in the budget period, identifying each improvement by name and estimating the total on-site construction costs. The list must also state whether the contracting agency intends to perform the construction through a private contractor. If the contracting agency intends to use the contracting agency's own equipment or personnel to perform construction work on a public improvement, and the estimated value of the construction work that the contracting agency intends to perform with the contracting agency's own equipment or personnel exceeds $200,000 (or $125,000 if the public improvement involves the resurfacing of highways, roads or streets at a depth of two or more inches), the contracting agency shall file with the commissioner not later than 180 days before construction begins on the public improvement an analysis that shows that the contracting agency's decision conforms to the state's policy that contracting agencies make every effort to construct public improvements at the least cost to the contracting agency. Public agencies are required to keep and preserve a full, true and accurate account of the costs of performing the work, including all categories of costs described in ORS 279C.305(3)(b). The final account of the costs is a public record. Use Form WH-118 (Planned Public Improvement Summary) to list planned public improvements. Use this form (WH-119) to report the agency's cost analysis.

Mail completed forms to:

Prevailing Wage Rate Unit
Bureau of Labor & Industries
800 N.E. Oregon St., #1045
Portland, OR 97232-2180

_____
(Name of Agency Official)

_____
(Signature of Agency Official)

The 2018 edition of the ***Prevailing Wage Rate Laws Handbook*** is now available. One complimentary hard copy of each Prevailing Wage Rate (PWR) publication is available upon request by emailing Oregon BOLI Labor & Industries at pwremail@boli.state.or.us or calling (971) 673-0838. Additional copies are available at cost, plus postage.

In addition to providing this and other PWR publications, Oregon BOLI Labor & Industries' PWR Unit regularly offers free, informational seminars for both public agencies and contractors. The current schedule is available online at http://www.oregon.gov/boli/WHD/PWR/docs/pwrsched.pdf.

Prior to responding below, please consider that all PWR-related information is available online at http://www.oregon.gov/BOLI/WHD/PWR/Pages/index.aspx. If you are interested in receiving the handbook and/or being included on our mailing lists for future seminar notifications, please complete the form below and return it to the PWR Unit. You may mail this form to the address on the opposite side of the form, or fax it to (971) 673-2372.

☐ Please send me the 2018 edition of the ***Prevailing Wage Rate Laws Handbook***.

☐ Please add me to the mailing list to receive information about OR BOLI PWR seminars/webinars.

☐ Please add me to the e-mailing list to receive information about OR BOLI PWR seminars/webiners.

_____
AGENCY OR CONTRACTOR BUSINESS NAME and PHONE NUMBER (Required)

_____
AGENCY OR CONTRACTOR BUSINESS E-MAIL ADDRESS (Please print clearly)

_____
MAILING ADDRESS

_____
CITY, STATE, ZIP

_____
NAME OF REPRESENTATIVE and PHONE NUMBER if different from above.

place
stamp
here

OREGON BUREAU OF LABOR & INDUSTRIES
PREVAILING WAGE RATE UNIT
800 NE OREGON #1045
PORTLAND, OR 97232

TRADE	BASIC HOURLY RATE	HOURLY FRINGE

PAINTER & DRYWALL TAPER

COMMERCIAL PAINTING	**26.56**	**13.51**
INDUSTRIAL PAINTING	**28.36**	**13.51**
BRIDGE PAINTING	**34.23**	**13.51**
DRYWALL TAPER		

Zone A (Base Rate)

38.48	**16.71**

Zone Differential for Drywall Taper
(Add to Zone A Base Rate)

Zone B	**6.00** per hour
Zone C	**9.00** per hour
Zone D	**12.00** per hour

Dispatch Cities for Drywall Taper

Albany	Coquille	Medford	Roseburg
Astoria	Eugene	Newport	Salem
Baker	Grants Pass	North Bend	Seaside
Bandon	Hermiston	Pendleton	The Dalles
Bend	Klamath Falls	Portland	Tillamook
Brookings	Kelso-Longview	Reedsport	Vancouver

Zone A: Projects located less than 61 miles of the respective city hall of the dispatch cities listed.
Zone B: Projects located 61 miles to 80 miles.
Zone C: Projects located 81 miles to 100 miles.
Zone D: Projects located 101 miles or more.

Note: Zone pay is based on AAA Road Mileage.

TRADE	BASIC HOURLY RATE	HOURLY FRINGE

PLUMBER/PIPEFITTER/STEAMFITTER

Area 1	**32.00**	**15.57**

Reference Counties Area 1

Baker Harney (a) Malheur

(a) Except that portion which lies North and West of a North-South line drawn from the town of John Day to a point five miles east of the town of Burns and three miles South of Burns thence on an airline through the town of Wagontire West to the county line.

(Add $2.21 to base rate if it is possible for worker to fall 30 ft. or more, or if required to wear a fresh-air mask or similar equipment for 2 hours or more)

Zone Differential for Area 1
Plumbers/Pipefitters/Steamfitters
(Add to Base Rate)

Zone 1	**2.50** per hour
Zone 2	**3.50** per hour
Zone 3	**5.00** per hour

Zone mileage based on road miles:
Zone 1: Forty (40) to fifty-five (55) miles from City Hall in Boise, Idaho.
Zone 2: Fifty-five (55) to one hundred (100) miles from City Hall in Boise, Idaho.
Zone 3: Over one hundred (100) miles from City Hall in Boise, Idaho.

There shall be a maximum of ten (10) hours of zone pay per workday.