JUNCTION CITY SCHOOL DISTRICT

LAUREL ELEMENTARY SCHOOL
SEISMIC UPGRADE

BID DOCUMENTS

HMK COMPANY

December 5, 2025

PROJECT MANAGER:	Paul Chamberlin, Regional Director HMK Company 363 State Street Salem, OR 97301 Phone: 503-949-5569 Email: paul.chamberlin@hmkco.org
DESIGN PROFESSIONAL:	Zachary Stokes, Principal ZCS Inc. 524 Main St, Suite 2 Oregon City, OR 97045 Phone: 503-659-2205 Email: zachstokes@zcsea.com
SCHOOL DISTRICT:	Troy Stoops, Superintendent Junction City School District 325 Maple Street Junction City, OR 97448 Phone: 541-998-6311 Email: tstoops@junctioncity.k12.or.us
PROJECT:	Seismic Upgrade Project
LOCATIONS:	Laurel Elementary School 1401 Laurel Street Junction City, OR 97448

TABLE OF CONTENTS

DIVISION 00 -- PROCUREMENT AND CONTRACTING REQUIREMENTS
00 0110 – Table of Contents
00 1113 – Invitation to Bid
00 2113 – Instructions to Bidders
00 4100 – Bid Form
00 4110 – Bid Checklist
00 4339 – First Tier Sub Contractor Disclosure
00 5000 – Stipulated Sum Agreement
00 6000 – General Conditions
00 6113 – Payment Bond
00 6613 – Performance Bond
00 7343 – Prevailing Wage Rates
00 8000 – Supplementary Conditions

DIVISION 01 -- GENERAL REQUIREMENTS
01 1000 – Summary
01 2000 – Price and Payment Procedures
01 2300 – Alternates
01 3000 – Administrative Requirements
01 3216 – Network Analysis Schedule
01 4000 – Quality Requirements
01 5000 – Temporary Facilities and Controls
01 5100 – Temporary Utilities
01 5713 – Temporary Erosion and Sediment Control
01 5721 – Indoor Air Quality Controls
01 6000 – Product Requirements
01 6023 – Substitution Request Form
01 6116 – Volatile Organic Compound (VOC) Content Restrictions
01 7000 – Execution and Closeout Requirements
01 7419 – Construction Waste Management and Disposal
01 7800 – Closeout Submittals
01 7900 – Demonstration and Training

DIVISION 02 - 12 – TECHNICAL SPECIFICATIONS PROVIDED BY ZCS INC. AND SODERSTROM ARCHITECTS

DIVISION 02 – EXSISTING CONDITIONS
02 4100 – Demolition

DIVISION 03 – CONCRETE
03 3000 – Cast-in-Place Masonry

DIVISION 04 – MASONRY
04 0100 – Maintence of Masonry
04 2613 – Masonry Veneer

DIVISION 05 – METALS
05 1200 – Structural Steel Framing
05 5000 – Metal Fabrications

DIVISION 06 – WOOD, PLASTICS, AND COMPOSITES
06 1000 – Rough Carpentry
06 1800 – Glued-Laminated Construction
06 2000 – Finish Carpentry
06 4100 – Architectural Wood Casework

DIVISION 07 – THERMAL AND MOISTURE PREVENTION
07 0150.19 – Preparation for Re-Roofing
07 1400 – Fluid-Applied Waterproofing
07 1900 – Water Repellents
07 2100 – Thermal Insulation
07 2119 – Foamed-In-Place Insulation
07 2500 – Weather Barriers
07 3133 – Asphalt Shingles
07 4113 – Metal Roof Panels
07 4646 – Fiber-Cement Siding
07 5400 – Thermoplastic Membrane Roofing
07 6200 – Sheet Metal Flashing and Trim
07 8400 – Firestopping
07 9200 – Joint Sealants
07 9513 – Expansion Joint Cover Assemblies

DIVISION 08 – OPENINGS
08 1113 – Hollow Metal Doors and Frames
08 3100 – Access Doors and Panels
08 4523 – Translucent Fiberglass Sandwich Panel Wall System
08 5113 – Aluminum Windows
08 7100 – Door Hardware
08 8000 – Glazing

DIVISION 09 – FINISHES
09 0561 – Common Work Results for Flooring Preparation
09 2116 – Gypsum Board Assemblies
09 5153 – Direct-Applied Acoustical Ceilings
09 6500 – Resilient Flooring
09 8430 – Sound-Absorbing Wall and Ceiling Units
09 9113 – Exterior Painting
09 9123 – Interior Painting

DIVISION 10 – SPECIALTIES
10 2600 – Wall and Door Protection
10 4400 – Fire Protection Specialties

DIVISION 11 – EQUIPMENT (NOT USED)

DIVISION 12 – FURNISHINGS
12 2400 – Window Shades

DIVISION 02 – TECHNICAL SPECIFICATIONS PROVIDED BY PBS
02 8213 – Asbestos Abatement
02 8221 – OHSA Requirements for Removal of Materials with Less Than 1 Percent Asbestos
02 8341 – Lead RRP for Child Occupied Facilities (EPA)

TECHNICAL DRAWINGS PROVIDED BY ZCS INC. AND SODERSTROM ARCHITECTS

GENERAL
G0.00 – Cover Sheet
G1.01 – Project Info

CIVIL
C1.00 – Civil Site Plan

DEMOLITION
AD2.01 – Demolition Floor Plans
AD2.02 – Demolition Roof Plans
AD3.01 – Demolition Exterior Elevations
AD6.01 – Demolition Overall RCP

ARCHITECTURAL
A0.11 – Assemblies and Finish Schedule
A1.01 – Architectural Site Plan
A2.01 – Partial Floor Plans, Types, and Schedules
A2.02 – Partial Roof Plans
A3.01 – Exterior Elevations
A3.11 – Building Sections
A3.21 – Wall Sections and Details
A5.01 – Interior Elevations
A6.01 – Partial Reflected Ceiling Plan
A8.21 – Exterior Details
A8.22 – Exterior Details

STRUCTURAL
S0.10 – Structural General Notes
S0.20 – Special Inspections and Testing
S1.10 – Foundation Plan
S2.10 – Roof Framing Plan
S4.10 – Foundation Details
S6.10 – Roof Framing Details
S6.11 – Roof Framing Details
S6.12 – Roof Framing Details
S6.13 – Roof Framing Details
S6.14 – Roof Framing Details

TECHNICAL DRAWINGS PROVIDED BY PBS
HA1 – Inventory of Asbestos and Lead Samples

ATTACHMENT A – Prevailing Wage Rate

THE JUNCTION CITY SCHOOL DISTRICT
SEISMIC UPGRADE PROJECT
LAUREL ELEMENTART SCHOOL
Bids Due 2:00 PM, January 15, 2026

INVITATION FOR BIDS

NOTICE IS HEREBY GIVEN that sealed bids will be accepted at **the Salem Office of HMK Company** by **Paul Chamberlin**, Regional Director, HMK Company, **363 State Street, Salem, OR 97301** until **2:00 PM** Local Time, **January 15, 2026** at which time and place bids will be closed. The bids will be publicly opened and read immediately after closing.

The project involves seismic upgrades to multiple areas of the existing Laurel Elementary School building. Work includes structural improvements to enhance the building's overall seismic performance, along with associated construction activities necessary to complete the retrofit.

A Pre-Bid Open House will be held at Laurel Elementary School, 1401 Laurel Street, Junction City, OR 97448, on **January 6th, 2026, at 3:00 PM**. Each Pre-Qualified General Contractor is expected to attend. This session will be the primary opportunity for General Contractors to bring their subcontractors to the site, review existing conditions, and coordinate with additional trades. Representation from the design team will also be in attendance. This Open House will be publicly advertised to encourage broader subcontractor participation.

The following deadlines and restrictions are applicable to the project: Project start date **June 11, 2026**. Contract must meet a Substantial Completion date of **August 21, 2026.**

On **October 27, 2025**, Junction City School District requested an exemption from the competitive bidding requirements of ORS 279C.335(1) pursuant to ORS 279C.335(2) for a specified project, known as "Laurel Elementary School Seismic Upgrade" by the District, to enable it to utilize an alternative contracting method, a two-stage contractor selection process RFQ and ITB.

The District conducted a qualifications-based contractor selection process for the Laurel Elementary School Seismic Upgrade as part of this 2025 RFQ/ITB procurement. Three General Contractors were competitively evaluated and ranked through this process. Triplett Wellman was pre-qualified separately based on the District's previous CM/GC procurement for this project and was carried forward into this bidding phase.

The four General Contractors pre-qualified to submit bids are:

- Triplett Wellman
- Woodburn Construction
- GBC Construction
- CB Const. Inc.

No other General Contractors will be considered or permitted to submit bids. Only these pre-qualified firms may participate in the Invitation to Bid process.

All bids must be submitted on the proposal forms furnished to the bidders. Each bid proposal shall be submitted in a sealed envelope and plainly marked **"LAUREL ELEMENTARY SCHOOL SEISMIC UPGRADE PROJECT"** and show the name and business address of the bidder. Each bid must be accompanied by an unconditional cashier's check, certified check or surety bond of the bidder in the amount of ten percent (10%). Unsuccessful bidders will have their security refunded to them when the contract has been awarded.

Bid documents may be obtained from HMK Company web site https://www.hmkco.org/bid-documents/.

Any objections to or comments upon the bid specifications must be submitted in writing to the attention of Paul Chamberlin, Regional Director, HMK Company, **363 State Street, Salem, OR 97301**. To be considered, such objections or comments must be received at least SEVEN (7) calendar days before the bid closing date.

This contract is for a public work subject to ORS 279C.800 to 279C.870 (the Oregon Prevailing Wage Rate Law). **BOLI wage rates will be applicable to this project.** The wage rates are included in the bid documents which are available as noted above.

No bid for a construction contract shall be received or considered by the public contracting agency unless the bidder is licensed by the Construction Contractors Board of the State of Oregon as required by ORS 701.035 and 701.055. Each bid must identify whether the bidder is an Oregon resident bidder, as defined in ORS 279A.120.

Bidder's attention is directed to compliance with ORS 279C.370 regarding submission of the First-Tier Subcontractor Disclosure Form. If the contract amount exceeds $100,000.00, the First-Tier Subcontractor Disclosure Form will be required and may be submitted either with the bid or within **two (2)** hours after the bid closing time and date at the bid site address. Failure to provide the First-Tier Subcontractor Disclosure Form may result in bid rejection.

The District reserves the right to reject any or all bids, to waive formalities, and to postpone the award of the contract for thirty (30) days. All bids and all prices quoted in bids shall be firm for a period of thirty (30) days after the bid closing date.

Dated this December 5, 2025

Paul Chamberlin
Regional Director
HMK Company
on behalf of Junction City School District

PART 1 – GENERAL

1.1 GENERAL

A. The Work contemplated under this contract with Junction City School District, (also referred to as the Owner or the District), includes all labor, materials, transportation, equipment and services necessary for, and reasonably incidental to, the completion of all Work in connection with the project described in the bidding documents.

B. On October 27, 2025, the Junction City School District requested an exemption from the competitive bidding requirements of ORS 279C.335(1) pursuant to ORS 279C.335(2) for a specified project, known as "Capital Bond Project" by the District to enable it to utilize an alternative contracting method, two-stage contractor selection process RFQ and ITB.

The following General Contractors have been pre-qualified to bid this project:

- Triplett Wellman
- Woodburn Construction
- GBC Construction
- CB Const. Inc.

C. A brief summary of the Work to be completed for the District is as follows:

The project involves seismic upgrades to multiple areas of the existing Laurel Elementary School building. Work includes structural improvements to enhance the building's overall seismic performance, along with associated construction activities necessary to complete the retrofit.

D. Provide Alternate Pricing as indicated in 01 2300

1.2 EXAMINATION OF SITE AND CONDITIONS

A. Prior to submitting a bid, the bidder shall make a careful examination of the drawings, specifications and other contract documents and shall fully inform himself as to the quantity of materials and the sources of supply of the materials. Failure to make these precautions will not release the successful bidder from entering into a contract or excuse him from performing the Work in strict accordance with the terms of the contract.

B. The Owner will not be responsible for any loss or any unanticipated costs that may be suffered by the successful bidder as a result of such bidder's failure to fully inform himself in advance with regard to all conditions pertaining to the Work and the character of the Work required. No statement made by any officer, agent or employee of the Owner in relation to the physical conditions pertaining to the site of the Work will be binding on the Owner.

1.3 INTERPRETATION OF CONTRACT DOCUMENTS

A. If any person contemplating submitting a bid for the proposed contract finds discrepancies in, or omission from, or is in doubt as to the true meaning of any part of the drawings, specifications or form of contract documents, he may submit to the Owner's Project Manager a written request for an interpretation thereof to be received in the office of the Owner's Project Manager no later than **SEVEN (7)**

calendar days before bid, before 2:00 PM local time. The person submitting the request will be responsible for its delivery prior to the time of closing.

B. Any official interpretation of the drawings, specifications, and conditions of the contract or forms of contract documents will be made only by subsequent addenda issued by the Project Manager. The Owner will not be responsible for any other explanation or interpretation of the proposed documents.

1.4 SPECIFIED PRODUCTS AND SUBSTITUTIONS

A. Bids must be based upon the use of items and manufacturers named in the specifications, or, approved equals issued by addenda during the bidding period. Approval of equals or substitutions must not be assumed.

B. If a prospective bidder or supplier seeks approval of a particular manufacturer's material or product other than the material, product and / or manufacturer designated in the specifications, he may submit a written request for such substitute material, product and / or manufacturer. Substitution requests are to be submitted using the Substitution Request Form included in this project manual. Substitution requests must be received by the Owner's Project Manager no later than **SEVEN** (**7) calendar days before bid, before 2:00 PM** local time. The person requesting the substitution will be responsible for delivery of the substitution request form prior to the time of closing. **Emailed Substitution Request Forms will be accepted by Paul Chamberlin, Regional Director, at paul.chamberlin@hmkco.org**

C. Approval of substitution requests will be made only by addenda issued by the Owner's Representative during the bidding period. The Owner will not be responsible for any other approval of a particular manufacturer's materials.

1.5 PRE-BID MEETING

A. A Pre-Bid Open House will be held at Laurel Elementary School at 1401 Laurel Street, Junction City, OR 97448 on **January 6th, 2026 at 3:00 PM.** Representatives of the Pre-Qualified Contractors and their sub-contractors can attend and will meet with the Owner and Project Manager at the site for review of the project specifications and site walk of the facility.

B. Pre-Qualified Contractors are strongly encouraged to bring their sub-contractors to this open house for review of the conditions.

C. This Open House will advertised for additional Sub-contractors to attend and meet the Pre-Qualified Contractors eligible to bid on this project.

1.6 GENERAL STATUTORY PROVISIONS CONCERNING PUBLIC CONTRACTS

A. In accordance with the provisions of Oregon Revised Statues (ORS) 279C.530, it is agreed that the Contractor shall make prompt payment, as due, to all person supplying to the contractor labor or materials for the prosecution of the Work provided for herein, pay all contributions or amounts due the State Industrial Accident Fund from the Contractor incurred in the performance of the contract herein, not permit any lien or claims to be file or prosecuted against the District on account of any labor or material furnished, and to pay the State Tax Commission all sums withheld from employees pursuant to ORS 316.169, ORS 316.189 and ORS 316.167.

B. Pursuant to ORS 279C.515, it is agreed that if the Contractor fails, neglects or refuses to make prompt payment on any claim for labor or services furnished to the

Contractor by any persons in connection with this agreement as such claim becomes due, the proper officer of officers representing the District may pay such claim to the person furnishing the labor or service and charge the amount of the payment against the Contractor. The payment of a claim in the manner authorized in this paragraph shall not relieve the Contractor or his surety from obligation with respect to any unpaid claims.

C. Pursuant to ORS 279C.520, it is a condition of this agreement that no person shall be employed by the Contractor for more than eight (8) hours in any one (1) day, or forty hours in any one (1) week, except in cases of necessity, emergency or where the public policy absolutely requires it, and in such cases, the person shall be paid at least time and a half pay for all overtime in excess of eight (8) hours in any one (1) day and for Work performed on Saturdays and legal holidays.

D. Pursuant to ORS 279C.525 the Contractor shall comply with the provisions of all federal, state and local statues, ordinances and regulations dealing with the prevention of environmental pollution and the preservation of natural resources that affect the project.

E. Pursuant to ORS 279C.530, it is an express condition of this agreement that the Contractor shall, promptly, as due, make payment to any person, co-partnership, association or corporation furnishing medical, surgical and hospital care or other needed care and attention, incident to sickness or injury, to the employees of such Contractor, or all sums which the Contractor may or shall have deducted from their wages of his employees for such services pursuant to the terms of ORS 279B.230, and any contract entered into pursuant thereto, or collected or deducted from the wages of its employees pursuant to any law, contract or agreement for the purposes of providing or paying for such service.

F. The hourly rate of wage to be paid by the Contractor (and incorporated in his subcontracts) shall not be less than provided in ORS 279C.800 to ORS 279C.870, and as hereinafter included in Section 00 7343-BOLI Wage Rate Requirements.

G. Pursuant to ORS 645.001 et seq. OAR Chapter 437, Div. 3 and OAR Chapter 437-002-0320 through OAR Chapter 437-002-0325, the Contractor shall comply with the following conditions under any contract to provide the District with goods or services.

1. Contractors and their employees shall comply with the requirements of the above cited Laws, Rules, Policies and Regulations

2. The Contractor shall review the Material Safety Data Sheets filed by the District to determine if there are any chemicals stored at the site of Work which the Contractor or any subcontractors will use, or could be exposed to in an emergency

3. Workers shall inform the executive officer at the location where services are being performed of all hazardous chemicals which they or their sub-contractors bring upon education facility property, and upon request, provide the District with M.S.D.S. for such chemicals

H. Each bid shall identify whether the bidder is an Oregon resident bidder, as defined in ORS 279A.120.

I. Pursuant to ORS 279C.830 (3), the contractor and every subcontractor must have a public works bond filed with the Construction Contractors Board before starting work on the project, unless exempt under ORS 279C.836 (4), (7), (8) or (9).

1.7 BID SECURITY

A. No bid will be considered unless accompanied by a cashier's check or bid bond executed in favor of the District and associated facility for an amount equal to at least ten percent (10%) of the base bid and shall accompany the bid as evidence of good faith and as guarantee that if awarded the contract the bidder will execute the contract and provide a performance bond and payment bond as required. The successful bidder's check or bid bond will be retained until he has entered into a satisfactory contract and furnished a 100% performance bond and payment bond. The Owner reserves the right to hold the bid security as hereinafter noted.

B. The bid bond shall be furnished by a bonding company licensed to do business in the State of Oregon.

C. Should the successful bidder fail to execute and deliver the signed agreement and a satisfactory payment bond and performance bond within ten (10) days after the bid has been accepted by the Owner, the cashiers check or bid bond may be forfeited as liquidated damages at the option of the Owner. The date of acceptance of the bid and the award of the contract as contemplated by the contract documents shall mean the day on which the Owner takes official action in making the award.

1.8 EXECUTION OF THE BID FORM

A. The bid form invites bids on definite drawings and specifications. Only the amounts and information asked for on the bid form furnished will be considered as the bid. Each bidder shall bid upon the Work exactly as specified and provided in the bid form. The bidder shall include in a sum to cover the cost of all items contemplated by the bidding documents.

B. The bid form included in the project manual as Document 00 4100 is the official bid form that will be used in submitting a bid. Only the official bid form may be used in submitting a bid.

C. All blank spaces in the official bid form shall be filled and numbers shall be stated both in writing and in figures. If the bid is made by a partnership, it shall contain the names of each partner and shall be signed in the firm name, followed by the signature of the partner signing for the firm. The address of the bidder shall be typed or printed on the bid form.

D. Bids which are incomplete, or which are conditioned in any way, or which contain erasures or alterations may be rejected.

1.9 SUBMISSION OF BID

A. The bid proposal shall be sealed in an opaque envelope, addressed as follows:

BID PROPOSAL
Laurel Elementary School
Junction City School District
C/O HMK Company
363 State Street
Salem, OR 97301
Attn: Paul Chamberlin, Regional Director

B. Bids will be received up to **2:00 PM, local time, January 15, 2026,** at the address listed above.

C. Bids shall be considered late if received any time after **2:00 PM, local time, on January 15, 2026**. Any bid submitted after the scheduled closing time shall be rejected and will be returned to the bidder unopened.

D. The First Tier Subcontractors list **MUST** be received by **4:00 PM, local time, on January 15, 2026**.

E. The following attachments are the only items to be included with your Bid Package for the Laurel Elementary Seismic Upgrade:

1. Attachment 1: Bid Form
2. Attachment 2: Bid Bond
3. Attachment 3: First Tier Subcontractors List
4. Attachment 4: References
5. Attachment 5: Checklist (**MUST** be signed and dated to make your Bid Complete)

There are to be **NO** additional items included with your Bid

1.10 OPENING OF BIDS

A. A public bid opening will be held immediately following the scheduled closing. Each and every bid received prior to the closing time will be publicly opened and read aloud irrespective of any irregularities or informalities contained in such bids.

1.11 DURATION OF BID PROPOSALS

A. The base bid shall be irrevocable for a period of thirty (30) days from the date and time of bid opening.

B. The base bid may be adjusted for alternate prices and / or unit prices for a period of sixty (60) days from the date and time of bid opening.

1.12 CONTRACT AND BOND

A. Within ten (10) days after receipt of Notice of Award, any bidder to whom a contract is awarded shall execute a formal written contract and shall furnish corporate surety bonds with a surety company satisfactory to the District in an amount equal to the full contract sum based upon the estimated quantities of items covered by the contract for the faithful performance of said contract and all provisions thereof; provided, the formation of said contract shall not be completed and the District shall not be liable thereon until said formal written contract has been executed both by the successful

bidder and by the District and a performance bond and a payment bond, properly executed has been delivered and accepted by the District.

B. The cashiers check or bid bond of the bidder with whom a contract is entered into will be returned when said contract has been properly executed by the bidder and said performance and payment bond, properly executed, has been delivered to and accepted by the District. The cashiers check or bid bond to each bidder who was not awarded a contract will be returned promptly after the contract and bond of the successful bidder, properly executed, has been delivered to and accepted by the District.

C. Any bidder to whom a contract is awarded and who shall default in executing said formal written contract or in furnishing a satisfactory performance and payment bond within the time and in the manner required by these specifications shall be liable to the District for whatever damages, including expenses and attorney's fees as may be incurred by the District in recovering to another bidder whether by a single action or by successive actions, shall not operate to release any defaulting bidder from said liability. The parties agree that the cashier's check or bid bond amount is fair determination of the amount of damages which the District would incur as a result of any such failure on the part of the bidder and the full amount will be forfeited as liquidated damages and will not constitute a penalty. In the event competent tribunal finds that this amount does not properly represent an award of liquidated damages, expenses and attorney's fees incurred by the District as a result of the bidder's default, then the final determination of the tribunal shall be deemed to represent the damages, expenses and attorney's fees incurred by the District as a result of the bidder's default.

1.13 SUBSTANTIAL COMPLETION AND LIQUIDATED DAMAGES

A. Substantial Completion shall occur by **August 21, 2026**.

B. Should the building not be ready for occupancy by the time and date listed above, liquidated damages to be paid by the Contractor to the Owner for each calendar day of delay, shall be included in the terms of any contract awarded hereunder in lieu of a penalty. The amount of liquidated damages shall be $1000.00 dollars per day.

1.14 DISTRICT PERSONNEL EXCLUDED FROM THE CONTRACT

A. No officer, agent or employee of the District shall be permitted any interest in the contract.

1.15 RESERVATIONS

A. The Board of Directors of Junction City School District, expressly reserves the following rights:

1. To reject all bids

2. To waive any or all irregularities in bids submitted

3. To consider the responsibility and competency of bidders in making any award

4. In the event two or more bids shall be for the same amount for the same Work, to award the contract by lot or otherwise as it deems appropriate

5. To award contract to one Contractor with the aggregate low bid

6. To reject any bid or bids not in compliance with prescribed bidding procedures and requirements

7. To reject any bid or bids not meeting the specifications set forth herein

8. In the event any bidder to whom a contract is awarded shall default in executing said formal contract or in furnishing a satisfactory performance and payment bond within the time and in the manner herein before specified, to re-award the contract to another bidder.

9. To accept Alternates in any order or combination, and to determine the low Bidder on the basis of the sum of the Base Bid and Alternates accepted.

1.16 ACCEPTANCE OF CONDITIONS

A. Each bidder by submission of a bid assents to each and every term and condition set forth anywhere in these contract documents and agrees to be bound thereby.

1.17 INTERPRETATION UPON CONTRACT DOCUMENTS

A. Only the Board of Directors of Junction City School District as represented by the Owner's Project Manager has authority to place any interpretation upon the foregoing or annexed contract documents. Any interpretation, either verbal or written, attempted to be placed thereon by any other person will not be binding upon the District.

1.18 EQUAL EMPLOYMENT

A. All bidders shall comply with the Provision of Executive Order 1246 (30 F.R. 12319-25) regarding Equal Employment Opportunity.

1.19 IMMIGRATION REFORM AND CONTROL ACT

A. All bidders shall comply with the provisions of the Immigration Reform and Control Act of 1986 regarding the verification of employment eligibility.

1.20 REFERENCES REQUIREMENTS

A. All bidders shall provide a list of three different project references for projects that the Contractor worked on within the last three years of comparable size and scope. **References must be submitted with the Bid From**.

B. Bidders shall use their own form to supply their list of references. The list of project references shall include the following information:

1. Name of the Project

2. Project description

3. Project location

4. Project date

5. Dollar value of the Project

6. Name of the project contact person

7. Current telephone number for contact person

8. Current email address for contact person

C. The references will be checked to determine if they are supportive of the bidder's ability to meet the requirements of this ITB.

D. The bidder must provide references that can be contacted regarding the quality of workmanship, level of service provided, timeliness of completion, and adherence to specifications.

E. The District reserves the right to choose and investigate any reference whether or not furnished by the bidder, and to investigate past performance of any bidder with respect to its successful performance on similar projects, its completion or delivery of service on schedule, and its lawful payment of suppliers, Subcontractors, and employees.

F. The District may postpone the award or execution of the Contract after the announcement of the apparent successful Contractor in order to complete its investigation. The School District may reject a bid if, in the opinion of the School District the overall reference responses indicate inadequate performance of the Contractor.

G. The District representative will make three attempts to contact the references from the list provided by the Contractor. If the reference is not contacted after three attempts that reference will be removed from the list and the bid rejected as non-responsive.

H. Each reference contacted shall be asked the same questions, including but not limited to: (1) quality of service; (2) delivery; (3) responsiveness to reported problems, including orders and billing; (4) how well the Contractor met the terms of the contract; and (5) whether or not the reference would choose to hire the Contractor again.

1.21 CRIMINAL HISTORY CHECK / PHOTO ID

A. It is the responsibility of the Contractor to submit the names of all Contractor employees and all Subcontractor employees who will be on the job site for more than one day. These employees shall fill out a criminal history form provided by the District and the Contractor must submit the completed forms to HMK Company (HMKCO). Criminal history checks will be run through the Oregon State Police as provided for in ORS 326.603. The District shall bear the cost of processing such Criminal history checks.

1. Through the signature on the criminal history form, authorization is also given to HMK Company and its representative to investigate this information. Further, with this signature, consent is given to all governmental agencies, public or private companies and individuals to release information regarding

the individual to the HMK Company and to their representative. The District shall bear the cost of processing such Criminal history checks.

B. In accordance with ORS 326.603(8) the District is required to terminate the employment or contract status of any individual who refuses to consent to a criminal history check of to be fingerprinted or falsely swears to the non-conviction of any crime.

C. In accordance with ORS 326.603(7)(a) no individual found to have been convicted of any crime listed in ORS 342.143 or of an attempt to commit one of the listed crimes shall be allowed to work on any District site.

1. It is vital that employees are instructed to accurately complete criminal history forms. Crimes listed in ORS 342.143 which automatically bar an individual from employment with or contracting with the District are primarily crimes of violence, crimes against children, and sex related crimes. However, falsely swearing that you have not been convicted of a crime obligates the District to terminate employment or contract status even if the crime is not listed in ORS 342.143.

D. **NO UNSUPERVISED CONTACT WITH STUDENTS**. "Unsupervised contact with students" means contact with students that provides the person opportunity and probability for personal communication or touch when not under direct supervision by the Owner. Contractor will ensure that Contractor, Subcontractors and suppliers at any tier, and their officers, agents, and employees will have no direct unsupervised contact with students while on the Owner's property. Contractor will work with the Owner to ensure compliance with this requirement. If Contractor is unable to ensure through a security plan that none of its and its Subcontractors and suppliers officers, agents, or employees will have direct, unsupervised contact with students in a particular circumstance or circumstances ("Unavoidably Unsupervised Workers"), Contractor shall so notify the Owner prior to beginning any Work that could result in such contact. Contractor authorizes the Owner to conduct a criminal background check of any such officer, agent, or employee. Contractor also agrees to cause its Subcontractors and/or suppliers and all employees, if any, that might have unsupervised contact with students to authorize the Owner to conduct such background checks, and to identify the same to the Owner prior to their entry onto the Project. The Owner shall pay any fees for the background check assessed by the Oregon Department of Education for processing the background check. If fingerprinting is required by law, Contractor shall arrange for such fingerprinting through local law enforcement agencies and for reporting and recordkeeping of the same as and to the extent required by law, including as required under Oregon SB155, OAR 581-021-0511 and applicable Owner rules, policies and procedures. If fingerprinting is required the cost will be borne solely by Contractor without reimbursement. In addition, Contractor shall comply with all other Oregon Senate Bill 155 requirements and any requirements of the Owner related to Senate Bill 155, including, but not limited to, providing Owner requested information for all of Contractor's or its Subcontractors' or supplier's employees, volunteers, or agents, and providing such requested information for new employees, volunteers, or agents before they begin work. Contractor will discuss any questions or concerns about these requirements with the Owner's designated Point of Contact before beginning Work. Compliance with this Section 1.21.D shall not be grounds for any increase in compensation nor extension of the Contract Time. Failure of compliance by

Contractor or any Subcontractor or supplier shall be grounds for immediate termination of this Contract by Owner for cause.

E. All employees working on site for more than one day shall wear a Name and Photo Identification Badge. Any employee on site for less than one day shall wear a visitor badge. Badges shall be the responsibility of the Contractor to provide. Badge shall state the Junction City School District, name of the project, employee name, and company they represent.

1.22 TOBACCO FREE EDUCATION FACILITY

A. All bidders shall comply with OAR 581.021.0110 and ORS 326.051 regarding Tobacco Use on Public Grounds.

B. For the purpose of this document "tobacco" is defined to include any lighted or unlighted cigarette, cigar, pipe, clove cigarette, and any other smoking product, spit tobacco, also known as smokeless, dip, chew, snuff, in any form, nicotine or nicotine delivering devices, chemicals or devices that produce the physical effect of nicotine substances or any other tobacco substitute (e.g., e-cigarettes). This does not include FDA approved nicotine replacement therapy products used for the purpose of cessation.

C. No employee, sub-contractor, material supplier, or project visitor is permitted to smoke, inhale, dip, or chew or sell tobacco at any time, <u>including non-education hours.</u>

1. In any building, facility; or

2. On education facility grounds, athletic grounds, or parking lots.

END OF SECTION

DATE:_____

LEGAL NAME OF BIDDER:_____

To: Junction City School District
Board of Directors;
325 Maple Street
Junction City, OR 97448

The Undersigned, having examined the Contract Documents, including the Bidding and Contract Requirements, the General Requirements, the Technical Specifications entitled:

Laurel ES Seismic Retrofit Specifications- Bid and Permit Set
Laurel ES Seismic Retrofit Drawings- Bid and Permit Set

As prepared by Soderstrom Architects and ZCS Inc and Junction City School District, as well as the premises and conditions affecting the Work, hereby proposes and agrees to perform, within the time stipulated, the Work, including all its component parts, and everything required to be performed, and to provide and furnish all labor, material, tools, expendable equipment, transportation and all other services required to perform the Work and complete in a workmanlike manner ready for use, all as required by and in strict accordance with the Contract Documents for the sums computed as follows:

BASE BIDS:

Project: Laurel Elementary School Siesmic Upgrade

_____DOLLARS $_____

which lump sums are hereby designated as BASE BIDS,

ALTERNATES

Provide all labor and materials necessary for the provisions of these alternate prices as referenced in 01 2300

Alternate 1: _____Dollars $_____

Description: Installation of seismic joint along Grid (9) and all associated demolition and construction. Refer to drawings for full scope.

TIME OF COMPLETION

The Undersigned agrees if awarded the Contract to complete all the Work in an acceptable manner in conformance with the Contract Documents and within the time specified.

ADDITIONAL REQUIREMENTS

1. The Undersigned agrees that the enclosed Bid Guarantee (bid bond, certified or cashier's check) in the amount of ten percent (10%) of the Basic Bid sum made payable to the Owner, shall be kept in escrow with the Owner; that its amount shall be a measure of liquidated damages the Owner will sustain by failure of the Undersigned to execute agreement and furnish bond, and that if the Undersigned fails to deliver the prescribed bond within ten (10) calendar days after receipt of the written notice of award, then the Bid Guarantee shall become the property of the Owner.

2. Should this proposal not be accepted within sixty (60) calendar days after the date and time of bid opening, or if the Undersigned executes Agreement and delivers bond, the Bid Guarantee shall be returned.

3. Contractor's State of Oregon Contractors' License Registration Number.
_____

4. Receipt of Addenda numbered _____ is hereby acknowledged.

5. The undersigned certifies that the Bidder is a _____ Bidder as defined in ORS 279A.120. ("Resident" or "Non-Resident", to be filled in by Bidder)

6. References are to be submitted with Bid Form as per Section 00 2113, 1.20.

SIGNATURES

_____
Legal Name of Bidder's Firm

By:_____ Title:_____

Address:_____ Telephone:_____

Email: _____

State of Incorporation, if Corporation:_____

Names of Partners, if Partnership:
_____ _____

Signed By_____

_____
Printed Name of Bidder / Firm

Company Name: _____

The following attachments are the only items to be included with your Bid Package for the Junction City School District Laurel Elementary School Seismic Upgrade Project. All items need to be submitted individually. There are to be **NO** additional items included with your Bid. This checklist **MUST** be signed and dated to make your bid complete. **All Bids are to be submitted in sealed envelope to Paul Chamberlin, Regional Director, at 363 State Street, Salem, OR 97301 by 2:00PM on January 15, 2026.**

Attachment 1: Bid Form _____

Attachment 2: Bid Bond _____

Attachment 3: First Tier Sub Contractors List _____

Attachment 4: Reference's _____

Attachment 5: Checklist _____

Signature:_____ **Date:**_____

Bids which are submitted by Bid Closing, but for which a required disclosure submittal has not been made by the specified Disclosure Deadline, are not responsive and shall not be considered for Contract award.

AGENCY SUPPLIED INFORMATION:

PROJECT NAME: **Laurel Elementary School Seismic Upgrade**

BID #: ___N/A_____BID CLOSING: Date: **January 15, 2026** Time: **2:00 PM**
REQUIRED DISCLOSURE DEADLINE: Date: **January 15, 2026** Time: **4:00 PM**
Deliver Form To (Agency): Junction City School District
Designated Recipient (Person): Paul Chamberlin, Regional Director
Agency's Address: 363 State Street
Salem, OR 97301

INSTRUCTIONS:

The contracting agency will insert "N/A" below if the contract value is not anticipated to exceed $100,000. Otherwise, this form must be submitted either with the bid or within **TWO (2)** working hours after the advertised bid closing date and time;

FAILURE TO SUBMIT THIS FORM BY THE DISCLOSURE DEADLINE WILL RESULT IN A NON-RESPONSIVE BID. A NON-RESPONSIVE BID WILL NOT BE CONSIDERED FOR AWARD.

It is the responsibility of bidders to submit this disclosure form and any additional sheets, with the bid number and project name clearly marked, and must be submitted at the location specified in the Invitation to Bid on the advertised bid closing date and within two (2) working hours after the advertised bid closing time at the location indicated by the specified disclosure deadline. See "Instructions to Bidders".

List below the name of each subcontractor that will be furnishing labor or materials and that is required to be disclosed, the category of work that the subcontractor will be performing and the dollar value of the subcontract. Enter" NONE" if there are no subcontractors that need to be disclosed. (ATTACH ADDITIONAL SHEETS IF NEEDED).

BIDDER DISCLOSURE:

SUBCONTRACTOR NAME	DOLLAR VALUE	CATEGORY OF WORK
1)		
2)		
3)		
4)		
5)		
6)		
7)		

8)		
9)		
10)		
11)		
12)		
13)		
14)		
15)		
16)		

The above listed first-tier subcontractor(s) are providing labor, or labor and material, with a Dollar Value equal to or greater than:

a) Five percent (5%) of the total Contract Price, but at least $15,000. (If the Dollar Value is less than $15,000, do not list the subcontractor above);

or

b) $350,000 regardless of the percentage of the total Contract Price.

Form Submitted By (Bidder Name): _____

Contact Name: _____

Phone #: _____

Email: _____

END OF SECTION

AGREEMENT made as of the___ day of _____, 2026, between **JUNCTION CITY SCHOOL DISTRICT (**hereinafter "the Owner") **and** _____, (hereinafter "the Contractor").

The Project is: Laurel Elementary School
Seismic Upgrade Project

The Owner is: Junction City School District
Troy Stoops, Superintendent
325 Maple Street
Junction City, OR 97448

The Consultant is: Zachary Stokes, Principal
ZCS Inc.
524 Main St, Suite 2
Oregon City, OR 97045

The Contractor is: **To Be Determined**

The Owner and Contractor agree as follows:

ARTICLE 1 THE CONTRACT DOCUMENTS

The Contract Documents consist of this Agreement, the General Conditions of the Contract, any Supplementary, or other Conditions, Drawings, Specifications, Addenda issued prior to execution of this Agreement, other documents listed in this Agreement and Modifications issued after execution of this Agreement; these form the Contract, and are incorporated by this reference herein. The Contract represents the entire and integrated agreement between the parties and supersedes prior negotiations, representations or agreements, either written or oral. An enumeration of the Contract Documents, other than Modifications, appears in Article 10.

ARTICLE 2 THE WORK OF THIS CONTRACT

The Contractor shall fully execute the Work described in the Contract Documents, including such construction activity as is reasonably inferable from the Contract Documents as necessary to produce the results intended by the Contract Documents, except to the extent specifically indicated in the Contract Documents to be the responsibility of others.

ARTICLE 3 DATE OF COMMENCEMENT AND SUBSTANTIAL COMPLETION

3.1 The date of commencement of the Work shall be the date as set forth in a notice to proceed issued by the Owner, which shall be issued no less than two (2) days prior to the date of commencement.

3.2 The Contract Time shall be measured from the date of commencement.

3.3 The Contractor shall continuously and diligently prosecute the Work and shall achieve Substantial Completion of the entire Work not later than **August 21, 2026** (the last day of the Contract Time), subject to approved adjustments of this Contract Time as provided in the Contract Documents.

3.4. If the Contractor fails to achieve Substantial Completion of the Work within the Contract Time and as otherwise required by the Contract Documents, the Owner shall be entitled to recover from the Contractor as liquidated damages and not as a penalty for Owner's loss of use of the Work $1,000.00 per day which

shall commence on the first day following the expiration of the Contract Time and continuing until the date of Substantial Completion. Such liquidated damages are hereby agreed to be a reasonable estimate of the loss of use damages the Owner will incur as a result of delay in the completion of the Work. The Owner may deduct any accrued liquidated damages from any unpaid amount due or to become due to the Contractor. Any Liquidated damages not so deducted shall be paid to the Owner by the Contractor upon demand together with interest as provided by Oregon law. The Contractor's obligation to pay liquidated damages for the applicable period shall not require Owner's establishment of any actual damages for such delay. The Owner's right to liquidated damages for delay is not affected by partial completion, occupancy, or beneficial occupancy. The liquidated damages provisions herein are intended to be in addition to every other remedy enforceable at law, equity, or under this Contract, including without limitation additional Owner costs related to the Project, and the right to collect consequential damages in any case where liquidated damages are unenforceable or otherwise unavailable. The provisions shall not relieve or release the Contractor from liability for any and all damage or damages suffered by the Owner due to other breaches of the Contract or suffered by separate contractors or under the indemnification and warranty provisions of this Contract, or other damages that are not expressly covered by liquidated damages.

ARTICLE 4 CONTRACT SUM

4.1 The Owner shall pay the Contractor the Contract Sum in current funds for the Contractor's proper and timely performance of the Contract and full and final completion of the Work. The Contract Sum shall be _____ **DOLLARS AND 00/100 ($_____).** This sum includes all general conditions, profit, overhead and all other amounts due or to become due to the Contractor for the proper and timely performance of the Contract and full and final completion of the Work. The Contract sum is subject to authorized additions and deductions as provided in the Contract Documents.

4.2 PERMITS, FEES AND NOTICES

4.2.1 The Contractor shall secure and pay for:

.1 All pertinent specialty permits and means and methods permits such as stormwater and street closure permits. (The owner is securing and paying for the plan review, building permit, and system development fees.)

4.2.2 The Contractor will be responsible for any renewals of and penalties arising from the building permit and from all other permits and governmental or utility fees. The Contractor shall secure and pay for all other permits and governmental fees, licenses and inspections necessary for proper execution and completion of the Work which are customarily secured after execution of the Contract and which are legally required when bids are received or negotiations concluded, including without limitation electrical, sewer, water, and plumbing permits and fees.

4.3 The Contract Sum is based upon the following alternates, if any, which are described in the Contract Documents and are hereby accepted by the Owner:

4.4 Unit prices, if any, are as follows: See Section 00 4100, Bid Form

ARTICLE 5 PAYMENTS

5.1 PROGRESS PAYMENTS

5.1.1 Based upon Applications for Payment which include all the necessary supporting documentation is received by the Owners Delegated Representative, and Owner not later than the first day of the month, and

Certificates for Payment are issued by the Owners Delegated Representative, the Owner shall make progress payments on account of the Contract Sum to the Contractor as provided below and elsewhere in the Contract Documents.

5.1.2 The period covered by each Application for Payment shall be one calendar month ending on the last day of the month, or as follows:

5.1.3 Provided that an Application for Payment and all supporting documentation, including all full and unconditional lien waivers related to the Work for which payment is requested is received by the Owners Delegated Representative and Owner not later than the first day of a month, the Owner shall make payment to the Contractor of the approved amount not later than the earlier of (i) 30 days after submission of the Application for Payment and all supporting documentation or (II) 15 days following the Owners Delegated Representative's approval. If an Application for Payment is received by the Owners Delegated Representative after the application date fixed above, payment shall be as provided in the previous sentence.

5.1.4 Each Application for Payment shall be based on the most recent schedule of values submitted by the Contractor in accordance with the Contract Documents. The schedule of values shall allocate the entire Contract Sum among the various portions of the Work. The schedule of values shall be prepared in such form and supported by such data to substantiate its accuracy as the Owners Delegated Representative and any Lender may require. This schedule, unless objected to by the Owners Delegated Representative, shall be used as a basis for reviewing the Contractor's Applications for Payment, provided, however, in no instance shall the schedule of values ever exceed the reasonable value of the Work performed.

5.1.5 Applications for Payment shall indicate the percentage of completion of each portion of the Work as of the end of the period covered by the Application for Payment.

5.1.6 Unless otherwise provided in the Owner's agreement with any Lender, and subject to other provisions of the Contract Documents, the amount of each progress payment shall be computed as follows:

.1 Take that portion of the Contract Sum properly allocable to completed Work as determined by multiplying the percentage completion of each portion of the Work by the share of the Contract Sum allocated to that portion of the Work in the schedule of values, less retainage of Five percent (5%). Pending final determination of cost to the Owner of changes in the Work, amounts not in dispute shall be included as provided in Subparagraph 7.3.8 of the General Conditions, or as modified by the parties;

.2 Add that portion of the Contract Sum properly allocable to materials and equipment delivered and suitably stored at the site for subsequent incorporation in the completed construction (or, if approved in advance by the Owner, suitably stored off the site at a location agreed upon in writing), less retainage of five percent (5%);

.3 Subtract the aggregate of 9.5 previous Payments made by the Owner; and

.4 Subtract amounts, if any, for which the Owners Delegated Representative has withheld or nullified a Certificate for Payment as provided in Paragraph 9.5 of the General Conditions.

or as modified by the parties.

5.1.7 The progress payment amount determined in accordance with Subparagraph 5.1.6 shall be further modified under the following circumstances:

.1 Add, upon Substantial Completion of the Work, a sum sufficient to increase the total payments to the full amount of the Contract Sum, less 150% of such amounts as the Owners Delegated Representative, any Lender or the Owner shall determine for incomplete Work and unsettled claims;

.2 Add, if final completion of the Work is thereafter materially delayed through no fault of the Contractor, any additional amounts payable in accordance with Subparagraph 9.10.3 of the General Conditions.

5.1.8 Reduction or limitation of retainage, if any, shall be as follows: None

5.1.9 Except with the Owner's prior written approval, the Contractor shall not make advance payments to suppliers for materials or equipment which have not been delivered and stored at the site.

5.2 FINAL PAYMENT

5.2.1 Final payment, constituting the entire unpaid balance of the Contract Sum, shall be made by the Owner to the Contractor when:

.1 A final Certificate for Payment has been issued by the Owners Delegated Representative.

5.2.2 The Owner's final payment to the Contractor shall be made no later than 30 days after the issuance of the Owners Delegated Representative's final Certificate for Payment.

ARTICLE 6 TERMINATION OR SUSPENSION

6.1 The Contract may be terminated by the Owner or the Contractor as provided in Article 14 of the General Conditions.

6.2 The Work may be suspended by the Owner as provided in Article 14 of the General Conditions.

6.3 The Owner shall, in addition to the Right to Stop the Work, have the right to require that the Contractor replace or remove construction personnel assigned to the Work, if, in the Owner's sole determination, specific construction personnel are impairing or impeding the prosecution of the Work.

ARTICLE 7 MISCELLANEOUS PROVISIONS

7.1 Where reference is made in this Agreement to a provision of the General Conditions or another Contract Document, the reference refers to that provision as amended or supplemented by other provisions of the Contract Documents.

7.2 Payments due and unpaid under the Contract shall bear interest in accordance with the Oregon Prompt Payment Act, ORS 279C.570.

7.3 The Owner's representative is: Paul Chamberlin, Regional Director, HMK Company. The Owner may change this representative at any time.

7.4 The Contractor's Representative is: Name, Title, Company.

7.5 Neither the Owner's nor the Contractor's Representative shall be changed without ten (10) days written notice to the other party.

7.6 CONTRACTOR'S CONSTRUCTION SCHEDULES

7.6.1 Within ten (10) days after issuance of the Notice to Proceed, the Contractor shall submit a preliminary schedule of the Work. Within 30 days after issuance of the Notice to Proceed, and before any progress payment need be made, the Contractor, after consultations with its Subcontractors and Suppliers of any tier, shall submit six copies of a Contractor's Construction Schedule to the Owners Delegated Representative and one copy to the Owner. Not less than ten percent of the Progress Payment may be withheld until a Contractor's Construction Schedule in a form satisfactory to the Owners Delegated Representative and Owner has been submitted. Neither the Owner nor the Owners Delegated Representative will be obligated to review the substance of the Contractor's Construction Schedule.

7.6.2 The Contractor's Construction Schedule shall be based upon a critical path method ("CPM") analysis of construction activities and sequence of operations needed for the orderly performance and completion of all separable parts of the Work in accordance with the Contract and within the Contract Time. The schedule shall be a critical path method type in the form of a precedence diagram and activity listing and shall be time-scaled. It shall include the Notice to Proceed date, the Date(s) of Substantial Completion, and the Date(s) of Final Completion in accordance with the Contract Documents. The Critical Path shall be clearly indicated on the Contractor's Construction Schedule. No more than 20% of the progress activities shall be on the critical path, and no more than 30% shall have less than five days of float. The value of any single activity shall not exceed $50,000, except that 5% of the total activities may exceed this limit without prior approval. The time-scaled network diagram shall be summarized on a single sheet not to exceed 11"x 17".

7.6.2.1 The network diagram shall show in detail and in order the sequence of all significant activities, their descriptions, start and finish dates, durations and dependencies, necessary to complete all Work and any separable parts thereof. The activity listing shall show the following information for each activity on the network diagram:

.1 Description;

.2 Duration (not to exceed fifteen working days);

.3 Craft;

.4 Equipment (including hours of usage);

.5 Start and finish dates;

.6 Total float time and free float time;

.7 Dates that work must be performed and completed by other Contractors or Subcontractors to support the Work and the interfaces with such other Contractors; and

.8 Cost-loading, correlated to the Schedule of Values, which, upon approval, shall be used as a basis for determining action on progress payments throughout the Project.

7.6.2.2 A schedule for the purchase and receipt of items required for performance of the Work, showing lead times between purchase order placement and delivery dates, shall be integrated with the Contractor's Construction Schedule. The Contractor shall furnish the Owners Delegated Representative with copies of all purchase orders and acknowledgments and fabrication, production, and shipping schedules for all major items on the critical path within ten days of the Contractor's receipt of each purchase order, acknowledgment or schedule. Neither the Owners Delegated Representative nor the Owner shall be

deemed to have approved or accepted any such material, or its schedule, nor deemed to have waived this requirement if some or all of the material is not received.

7.6.2.3 Milestone completion dates shall be clearly defined on the Contractor's Construction Schedule.

7.6.2.4 If abbreviations are used in the Contractor's Construction Schedule, a legend shall be provided to define all abbreviations.

7.6.2.5 The Contractor shall prepare and keep current a schedule of submittals, coordinated with the Contractor's Construction Schedule, which allows the Owners Delegated Representative at least ten (10) days to review the submittals.

7.6.2.6 The Progress Schedules shall be submitted in electronic format and native program schedule using the latest version of Primavera P6. The Contractor may request to use different project management software, such as, Microsoft Project, but must first receive approval from the Owner, by demonstrating its capabilities. This can be accomplished by submitting a sample CPM printout of similar scope. If the alternative software is accepted, the Contractor will be required to supply the Owner an authorized copy of the software with all user support manuals.

7.6.2.7 At each monthly meeting with the Owner, the Contractor shall submit (a) a bar chart schedule showing the activities planned for the next month, and (b) a report showing actual starts and finishes from the previous month. The bar-chart schedule shall show all Work activities numbered according to the CPM, any submittal or delivery activities with less than five (5) days, one (1) float, and any permitting, testing, or inspection activities by others.

7.6.3 Within ten days after receipt by the Owners Delegated Representative, electronic copies of the Contractor's Construction Schedule will be returned to the Contractor with comments, following review by the Owner. Review by the Owner and Owners Delegated Representative of the Contractor's Construction Schedule shall not constitute an approval or acceptance of the Contractor's construction means, methods, or sequencing, or its ability to complete the Work in a timely manner.

7.6.4 The Contractor shall utilize and comply with the Contractor's Construction Schedule. The Contractor shall not be entitled to any adjustment in the Contract Time, the Contractor's Construction Schedule, or the Contract Sum, or to any additional payment of any sort by reason of the loss or use of any float time, including time between the Contractor’s anticipated completion date and end of the Contract Time, whether or not the float time is described as such on the Contractor’s Construction Schedule.

7.6.5 Should the Contractor fail to meet any scheduled date as shown on the current Contractor's Construction Schedule, the Contractor shall, if requested, be required at its own expense to submit within ten days of the request an updated Contractor's Construction Schedule. If the Contractor's progress indicates to the Owner that the Work will not be Substantially Completed within the Contract Time, the Contractor shall, at its own expense, increase its work force and / or working hours to bring the actual completion dates of the activities into conformance with the Contractor's Construction Schedule and Substantial Completion within the Contract Time. The Contractor shall also submit a revised Contractor's Construction Schedule at its own expense within ten days of notice from the Owners Delegated Representative that the sequence of Work varies significantly from that shown on the Contractor's Construction Schedule. Neither the Owner nor the Owners Delegated Representative will, however, review the substance or sequence of the Contractor's Construction Schedule.

7.6.6 Schedule Float Utilization. Float belongs to the benefit of the Project for the Owner’s use and no float shall be used without the Owner’s written approval. Any float time to activities not on the critical path shall be used by the Contractor to optimize its construction process. Any float time between the end of the final construction activity and the final completion date shall be used by the Owner in determining if

additional contract days are to be awarded for changes in the contract or for delays to the contract caused by the Owner. The Contractor will not be entitled to any adjustment in the Contract Time, the Construction Schedule, or the Contract Sum, or to any additional payment of any sort by reason of the Owner's use of float time between the end of the final construction activity and the final completion date.

7.6.7 Delays. The Contractor shall, within seven days of the event, notify the Owner and Owners Delegated Representative in writing of any proposed changes in the Contractor's Construction Schedule or the Contract Time and of any event which could delay performance or supplying of any item of the Work and shall indicate the expected duration of the delay, the anticipated effect of the delay on the Contractor's Construction Schedule, and the action being taken to correct the delay situation. In the event the Contractor is entitled to a change in the Contract Time, the adjustment to the Contract Time shall be limited to the change in the critical path of construction activities.

7.6.8 Final Completion. The Contractor shall attain Final Completion of the Work in accordance with the Contract within sixty [60] days after the date of Substantial Completion.

7.6.9 Meetings. During the period commencing with the issuance of Notice to Proceed and ending with the date of Final Completion of the Work, the Contractor shall attend and participate in and ensure applicable Subcontractors of any tier and Suppliers attend and participate in:

.1 A pre-contract meeting;

.2 A pre-construction meeting;

.3 Regular weekly Project status meetings scheduled by the Owner or by the Owners Delegated Representative to review progress of the Work, to discuss the Contractor's progress reports, to obtain necessary Owner's or Owners Delegated Representative's approvals, and generally to keep the Owner and Owners Delegated Representative informed and involved in the progress of the Project; and

.4 Regular on-site meetings scheduled by the Owner or by the Owners Delegated Representative to review progress of the Work and other pertinent matters.

7.7 Any and all references to "Engineer" or "Consultant " in this Agreement or in the General Conditions of the Contract shall be deemed for all purposes to mean and refer to: Owners Delegated Representative, unless the service at issue must be performed by a licensed design professional.

7.8 If any provision of this Agreement or application thereof to any extent shall be invalid or unenforceable the remainder of the Agreement or its application thereof shall not be affected thereby and the provision or application shall be enforced to the fullest extent permitted by law.

7.9 The Contractor shall not assign this Agreement without the prior written permission of the Owner. Contractor shall assign to Owner any and all rights that the Contractor now has or hereafter may acquire pursuant to a contract related to the Project which rights the Owner shall thereafter be entitled to assign to another person or entity including without limitation any Lender, upon the request of the Owner, provided, however, until the exercise of such rights of assignment by the Owner, there shall be no privity or contractual relationship between the Owner and such persons and entities. The Contractor hereby consents to the free assignment of this Agreement in whole or in part by the Owner to any other person or entity including but not limited to any Lender.

7.10 The Contractor represents and warrants to the Owner who relies thereon as follows:

7.10.1 It and all of its Subcontractors are financially solvent, able to pay debts as they become due and have sufficient working capital to timely perform and complete all obligations related to the Project.

7.10.2 That it is able to timely and completely furnish all the labor, material, equipment and services to necessary to fully complete the Work within the Contract Time.

7.10.3 It and all of its Subcontractors are duly and properly licensed with the Oregon Construction Contractors Board and all other governmental agencies and are signatories to collective bargaining agreements.

7.10.4 It has visited the site, undertaken any and all tests it deems advisable, is familiar with the structure and that it is unaware of any potential condition with would increase the Contract Sum or Contract Time.

7.10.5 It and all of its Subcontractors possess a high level of experience and expertise in projects similar to the Project.

7.10.6 Neither Contractor nor any of its Subcontractors are "exempt" from the requirement to provide Workers' Compensation Insurance under Oregon law.

7.10.7 It is fully authorized to execute this Agreement and perform all the obligations required of it hereunder.

7.11 The representations and warranties of 7.11 are in addition to and not in lieu of any other obligation or law and survive the execution of this Agreement and final completion of the Project.

ARTICLE 8 LEGAL REQUIREMENTS & RESPONSIBILITIES

8.1 Contractor shall:

.1 Make payment promptly, as and when due, to all persons supplying to labor, materials, equipment or services;

.2 Pay all contributions or amounts due the Industrial Accident Fund from Contractor or any Subcontractor incurred in the performance of the Work;

.3 Not permit any lien or claim to be filed or prosecuted against the Owner, on account of any labor, materials, equipment or services furnished, supplied or provided;

.4 Pay to the Department of Revenue all sums withheld from employees pursuant to ORS 316.167;

.5 Demonstrate that an employee drug testing program as set forth herein is in place for Contractor and all Subcontractors pursuant to ORS 279C.505;

.6 To the extent that any demolition is included as a part of the Work, salvage or recycle construction and demolition debris, if feasible and cost-effective;

.7 To the extent that any lawn or landscape maintenance is included as a part of the Work, compost or mulch yard waste material at an approved site, if feasible and cost-effective.

8.2 If the Contractor fails, neglects or refuses to make prompt payment of any claim for labor or services furnished to the Contractor or any Subcontractor by any person in connection with the Work as such claim becomes due, the proper officer or officers representing the Owner may pay such claim to the person

furnishing the labor or services and charge the amount of the payment against funds due or to become due the Contractor by reason of this Agreement.

8.3 If the Contractor or a first-tier Subcontractor fails, neglects or refuses to make payment to a person furnishing labor or materials in connection with the Work within 30 days after receipt of payment from the Owner or the Contractor, the Contractor or first-tier Subcontractor shall owe the person the amount due plus interest charges commencing at the end of the 10-day period that payment is due under ORS 279C.505 and 279C.580 and ending upon final payment, unless payment is subject to a good faith dispute as defined in ORS 279C.505 and 279C.580. The rate of interest charged to the Contractor or first-tier Subcontractor on the amount due shall equal three times the discount rate on 90-day commercial paper in effect at the Federal Reserve Bank in the Federal Reserve district that includes Oregon on the date that is 30 days after the date when payment was received from the Owner or from the Contractor, but the rate of interest shall not exceed 30 percent. The amount of interest may not be waived.

8.4 If the Contractor or a Subcontractor fails neglects or refuses to make payment to a person furnishing labor or materials in connection with the Work, the person may file a complaint with the Construction Contractors Board, unless payment is subject to a good faith dispute as defined in ORS 279C.505 and 279C.580.

8.5 The payment of a claim in the manner authorized in this Agreement shall not relieve the Contractor or the Contractor's surety from obligation with respect to any unpaid claims.

8.6 No person shall be employed by the Contractor or any Subcontractors, which are subject to the statutory limitations of Oregon law for more than ten (10) hours in any one (1) day, or 40 hours in any one (1) week, except in cases of necessity, emergency, or where the public policy absolutely requires it, and in such cases, the employee shall be paid at least time and a half pay:

.1 For all overtime in excess of eight (8) hours a day or 40 hours in any one (1) week when the work week is five (5) consecutive days, Monday through Friday; or

.2 For all overtime in excess of ten (10) hours a day or 40 hours in any one (1) week when the work week is four (4) consecutive days, Monday through Friday; and

.3 For all Work performed on Saturday and on any legal holiday specified in ORS 279.334.

8.7 The Contractor shall give notice to employees in writing, either at the time of hire or before commencement of Work on the Project, or by posting a notice in a location frequented by employees, of the number of hours per day and days per week that the employees may be required to work. The Contractor shall include an identical provision in its subcontracts and require all Subcontractors, of any tier, to include an identical provision in all subcontracts.

8.8 The Contractor shall promptly, as and when due, make payment to any person, co-partnership, association or corporation, furnishing medical, surgical and hospital care or other needed care and attention, incident to sickness or injury, to the employees of the Contractor, of all sums which the Contractor agrees to pay for such services and all moneys and sums which Contractor collected or deducted from the wages of employees pursuant to any law, contract or agreement for the purpose of providing or paying for such service.

8.9 Every Subcontractor will comply with ORS 656.017, unless it is an exempt employer under ORS 656.126.

8.10 The Contractor is not a contributing member to the Public Employees' Retirement System and will be responsible for any and all federal, state and local taxes applicable to payments received under this

Agreement. The Contractor will not be eligible for any benefits from these contract payments of federal Social Security, employment insurance, Workers' Compensation or the Public Employees' Retirement System.

8.11 The hourly rate of wage to be paid by the Contractor or every Subcontractor subject to prevailing wage rates to workers, shall be not less than the prevailing rate of wage for an hour's work in the same trade or occupation in the locality where such labor is performed.

8.12 The Contractor and every Subcontractor subject to prevailing wage rates to employees shall keep the prevailing wage rates for that project posted in a conspicuous and accessible place in or about the project.

8.13 The Contractor and every Subcontractor subject to prevailing wage rates to employees and shall also provide for or contribute to a health and welfare plan or a pension plan, or both, for its employees on the Project and shall post notice describing such plans in a conspicuous and accessible place in or about the Project. The notice preferably shall be posted in the same place as the notice required under 5.1.16. In addition to the description of the plans, the notice shall contain information on how and where to make claims and where to obtain further information.

8.14 The Contractor represents and agrees that the specifications contain a sufficient provision stating the existing prevailing rate of wage which must be paid to workers in each trade or occupation required for such public work employed in the performance of the Work either by the Contractor or any Subcontractor or other person doing or contracting to do the whole or any part of the Work contemplated by the contract. Such workers shall be paid not less than such specified minimum hourly rate of wage.

8.15 The District represents and agrees that the specifications contain a sufficient provision stating that a fee is required to be paid to the Commissioner of the Bureau of Labor and Industries as provided in ORS 279C.825. The fee shall be paid to the commissioner pursuant to the administrative rule of the commissioner.

8.16 The Contractor or the Contractor's surety and every Subcontractor or Subcontractor's surety subject to prevailing wage rates shall file certified statements with the Owner in writing in the form prescribed by the Commissioner of the Bureau of Labor and Industries, certifying the hourly rate of wage paid each worker which Contractor or the Subcontractor has employed upon such public work, and further certifying that no worker employed upon such public work has been paid less than the prevailing rate of wage or less than the minimum hourly rate of wage specified in the contract, which certificate and statement shall be verified by the oath of Contractor or the Contractor's surety or Subcontractor or the Subcontractor's surety that the Contractor or Subcontractor has read such statement and certificate and knows the contents thereof and that the same is true to the Contractor's or subcontractor's knowledge. The certified statements shall set out accurately and completely the payroll records for the prior week including the name and address of each worker, the worker's correct classification, rate of pay, daily and weekly number of hours worked, deductions made and actual wages paid. Each certified statement required shall be delivered or mailed by Contractor or the Subcontractor to the public contracting agency. Certified statements for each week, during which the Contractor or the Subcontractor employs a worker upon the Project shall be submitted once a month, by the fifth (5th) business day of the following month.

8.17 The Contractor or Subcontractor shall preserve the certified statements for a period of three (3) years from the date of completion of the contract.

8.18 Per ORS 279C.855, the Contractor represents and agrees that the Owner has fully and timely included a provision in the Contract Documents that the Contractor and any Subcontractor shall comply with ORS 279C.840 in the invitation for bids, the request for bids, the contract specifications, the accepted bid or elsewhere in the Contract Documents and that the Owner has no liability for unpaid minimum wages.

8.19 Owner shall make progress payments on the contract monthly as Work progresses. Payments shall be based upon estimates of Work completed that are approved by the Owner. A progress payment shall not be considered acceptance or approval of any Work or waiver of any defects therein. In instances when an invoice is filled out incorrectly, or when there is any defect or impropriety in any submitted invoice or when there is a good faith dispute, the Owner shall so notify the Contractor within 15 days stating the reason or reasons the invoice is defective or improper or the reasons for the dispute. A defective or improper invoice, if corrected by the Contractor within seven days of being notified by the Owner, shall not cause a payment to be made later than specified in this section.

8.20 If requested in writing by a first-tier Subcontractor, Contractor, within ten (10) calendar days after receiving the request, shall send to the first-tier Subcontractor a copy of that portion of any invoice, request for payment submitted to the Owner or pay document provided by the Owner to the Contractor specifically related to any labor or materials supplied by the first-tier Subcontractor.

8.21 Payment of interest may be postponed when payment on the principal is delayed because of disagreement between Owner and Contractor.

8.22 The Owner may reserve as retainage from any progress payment an amount not to exceed five percent of the payment. As Work progresses, the Owner may in its sole discretion reduce the amount of the retainage and the Owner may in its sole discretion eliminate retainage on any remaining monthly contract payments after 50 percent of the Work under the contract is completed if, in the Owner's sole opinion, such Work is progressing satisfactorily. Elimination or reduction of retainage shall be allowed only upon written application by the Contractor, which application shall include written approval of the Contractor's surety; except that when the contract Work is 97-1/2 percent completed the Owner may, at its discretion and without application by the Contractor, reduce the retained amount to 100 percent of the value of the Work remaining to be done. Upon receipt of a written application by the Contractor, the Owner shall respond in writing within a reasonable time.

8.23 The retainage held by the Owner shall be included in and paid to the Contractor as part of the final payment of the contract price. The Contractor shall notify the Owner in writing when the Contractor considers the Work complete and the Owner shall, within 15 days after receiving the written notice, either accept the Work or notify the Contractor of Work yet to be performed on the contract.

8.24 The Contractor shall not request payment from the Owner of any amount withheld or retained in accordance herewith until such time as the Contractor has determined and certified to the Owner that the Subcontractor is entitled to the payment of such amount. A dispute between the Contractor and a first-tier Subcontractor relating to the amount or entitlement of a first-tier Subcontractor to a payment or a late payment interest penalty under a clause included in the subcontract pursuant to the terms hereof does not constitute a dispute to which the Owner is a party. The Owner shall not be included as a party in any administrative or judicial proceeding involving such a dispute.

The Contractor shall include in each subcontract for property or services entered into by the Contractor and a first-tier Subcontractor, including a material supplier, for the purpose of performing a construction contract:

.1 A payment clause that obligates the Contractor to pay the first-tier Subcontractor for satisfactory performance under its subcontract within ten (10) days out of such amounts as are paid to the Contractor by the Owner under such contract; and

.2 A clause that requires the Contractor to provide a first-tier subcontractor with a standard form that the first-tier subcontractor may use as an application for payment or as another method by which the subcontractor may claim a payment due from the contractor.

.3 A clause that requires the Contractor, except as otherwise provided in this paragraph, to use the same form and regular administrative procedures for processing payments during the entire term of the subcontract. A contractor may change the form or the regular administrative procedures the contractor uses for processing payments if the contractor:

(A) Notifies the subcontractor in writing at least 45 days before the date on which the contractor makes the change; and

(B) Includes with the written notice a copy of the new or changed form or a description of the new or changed procedure.

.4 An interest penalty clause that obligates the Contractor, if payment is not made within 30 days after receipt of payment from the Owner, to pay to the first-tier Subcontractor an interest penalty on amounts due in the case of each payment not made in accordance with the payment clause included in the subcontract pursuant to subparagraph .1 of this 8.24. The Contractor or first-tier Subcontractor shall not be obligated to pay an interest penalty if the only reason that the Contractor or first-tier Subcontractor did not make payment when payment was due is that the Contractor or first-tier Subcontractor did not receive payment from the Owner or the Contractor when payment was due. The interest penalty shall be:

(A) For the period beginning on the day after the required payment date and ending on the date on which payment of the amount due is made; and

(B) Computed at the rate specified in ORS 279C.515(2).

8.25 The Contractor shall include in each of its subcontracts, for the purpose of performance of such contract condition, a provision requiring the first-tier Subcontractor to include a payment clause and an interest penalty clause conforming to the standards of Section 8.24 in each of its subcontracts and to require each of its Subcontractors to include such clauses in their subcontracts with each lower-tier Subcontractor or supplier.

8.26 If the Contractor is an employer, the Contractor is a subject employer under Oregon's Workers' Compensation Law and shall comply with ORS 656.017 and shall provide Workers' Compensation coverage for all their "subject workers" as defined in ORS Chapter 656.

8.27 The Contractor and all Subcontractors subject to licensing with the Oregon Construction Contractors Board shall be duly licensed therewith at the time they bid any Work, enter into any contract to perform any Work, perform any Work and at all times under which any warranty or repair obligation applies. The Contractor and all Subcontractors performing any Work which requires any other governmental licensing, such as those with the Elevator and Electrical Board, Plumbing Board or Landscape Contractors Board, shall be duly licensed with all appropriate governmental agencies at the time they bid any Work, enter into any contract to perform any Work, perform any Work and at all times under which any warranty or repair obligation applies.

8.28 If federal funds are involved, federal laws, rules and regulations applicable to the grant shall govern in the event they conflict with any provision of this Agreement or other required by law. The Contractor certifies that it is not currently employed by the federal government. This provision does not preclude the Contractor from holding another contract with the federal government.

8.29 The Contractor shall timely provide the Owner its name, address, social security, federal employee identification number and such other information as the Department of Revenue may require or request.

8.30 The Contractor shall comply and require all Subcontractors to comply with the applicable requirements of all laws, codes, ordinances, regulations and statutes, including but not limited to those in ORS Chapters 279A, B and C. To the extent that ORS Chapters 279A, B and C, or any other law, code, ordinance or regulations, requires any tender or condition to be included in this Agreement, such tender or condition is hereby incorporated by this reference. Nothing contained herein shall be construed so as to require the commission of any act contrary to law, code, rule, statute, ordinance or regulation, and wherever there is any conflict between any provisions contained herein and any statute, law, code, ordinance, rule or regulation the provision of this Agreement which is affected shall be curtailed and limited only to the extent necessary to bring it within the requirements of the law, code, rule, statute, ordinance or regulation.

8.31 If the Contractor is a foreign Contractor and the contract price exceeds $10,000, the Contractor shall promptly report to the Department of Revenue on forms to be provided by the Department of Revenue the total contract price, terms of payment, length of contract and such other information as the Department of Revenue may require before final payment can be received on the public contract. For purposes of this A.3 I, a foreign Contractor is one who is not domiciled in or registered to do business in the State of Oregon.

8.32 The Contractor represents and agrees that the bid documents make sufficient specific reference to federal, state and local agencies that have enacted ordinances or regulations dealing with the prevention of environmental pollution and the preservation of natural resources that affect the performance of the contract and have allocated all known environmental and natural resource risks to the Contractor by listing such environmental and natural resource risks with specificity in the bid documents.

8.33 The Contractor shall not discriminate against minority, women or emerging small business enterprises in the awarding of subcontracts. The Contractor shall certify that the Contractor has not and will not discriminate against minority, women, or emerging small business enterprises in obtaining any required subcontracts.

8.34 The Contractor shall use recyclable products to the maximum extent economically feasible in the performance of the Contract Work set forth in this document.

8.35 As referenced herein, an employee drug testing policy shall be as follows:

.1 The Contractor or Subcontractor shall have in place at the time of the execution of this Contract, and shall maintain during the term of this Contract, a Qualifying Employee Drug Testing Program for its employees that includes, at a minimum, the following:

(A) A written employee drug testing policy;

(B) Required drug testing for all new Subject Employees or, alternatively, required testing of all Subject Employees every 12 months on a random selection basis; and

(C) Required testing of a Subject Employee when the Contractor or Subcontractor has reasonable cause to believe the Subject Employee is under the influence of drugs.

A drug testing program that meets the above requirements will be deemed a "Qualifying Employee Drug Testing Program." For the purposes of this section an employee is a "Subject Employee" only if that employee will be working on the Project job site.

.2 The Contractor shall require each Subcontractor providing labor for the Project to:

(A) Demonstrate to the Contractor that it has a Qualifying Employee Drug Testing Program for the Subcontractor's Subject Employees, and represent and warrant to

the Contractor that the Qualifying Employee Drug Testing Program is in place at the time of subcontract execution and will continue in full force and effect for the duration of the subcontract; or

(B) Require that the Subcontractor's Subject Employees participate in Contractor's Qualifying Employee Drug Testing Program for the duration of the subcontract.

8.36 NO UNSUPERVISED CONTACT WITH STUDENTS. "Unsupervised contact with students" means contact with students that provides the person opportunity and probability for personal communication or touch when not under direct supervision by the Owner. Contractor will ensure that Contractor, Subcontractors and suppliers at any tier, and their officers, agents, and employees will have no direct unsupervised contact with students while on the Owner's property. Contractor will work with the Owner to ensure compliance with this requirement. If Contractor is unable to ensure through a security plan that none of its and its Subcontractors and suppliers officers, agents, or employees will have direct, unsupervised contact with students in a particular circumstance or circumstances ("Unavoidably Unsupervised Workers"), Contractor shall so notify the Owner prior to beginning any Work that could result in such contact. Contractor authorizes the Owner to conduct a criminal background check of any such officer, agent, or employee. Contractor also agrees to cause its Subcontractors and/or suppliers and all employees, if any, that might have unsupervised contact with students to authorize the Owner to conduct such background checks, and to identify the same to the Owner prior to their entry onto the Project. The Owner shall pay any fees for the background check assessed by the Oregon Department of Education for processing the background check. If fingerprinting is required by law, Contractor shall arrange for such fingerprinting through local law enforcement agencies and for reporting and recordkeeping of the same as and to the extent required by law, including as required under Oregon SB155, OAR 581-021-0511 and applicable Owner rules, policies and procedures. If fingerprinting is required the cost will be borne solely by Contractor without reimbursement. In addition, Contractor shall comply with all other Oregon Senate Bill 155 requirements and any requirements of the Owner related to Senate Bill 155, including, but not limited to, providing Owner requested information for all of Contractor's or its Subcontractors' or supplier's employees, volunteers, or agents, and providing such requested information for new employees, volunteers, or agents before they begin work. Contractor will discuss any questions or concerns about these requirements with the Owner's designated Point of Contact before beginning Work. Compliance with this Section 8.36 shall not be grounds for any increase in compensation nor extension of the Contract Time. Failure of compliance by Contractor or any Subcontractor or supplier shall be grounds for immediate termination of this Contract by Owner for cause.

8.37 LIST OF LAWS, RULES AND REGULATIONS

.1 The following laws, rules and regulations are incorporated herein by this reference whether or not specifically mentioned above. The Contractor shall comply and cause its subcontractors to comply with the obligations therein:

(A) Prompt payment to all Persons supplying labor or material; contributions to Industrial Accident Fund; liens and withholding taxes (ORS 279C.505(1));

(B) Demonstrate that an employee drug testing program is in place (ORS 279C.505(2));

(C) If the Contract calls for demolition Work described in ORS 279C.510(1), a condition requiring Contractor to salvage or recycle construction and demolition debris, if feasible and cost-effective;

(D) If the Contract calls for lawn or landscape maintenance, a condition requiring

Contractor to compost or mulch yard waste material at an approved site, if feasible and cost effective (ORS 279C.510(2);

(E) Payment of claims by public officers (ORS 279C.515(1));

(F) Contractor and first-tier subcontractor liability for late payment on Public Improvement Contracts pursuant to ORS 279C.515(2), including the rate of interest;

(G) Person's right to file a complaint with the Construction Contractors Board for all Contracts related to a Public Improvement Contract (ORS 279C.515(3));

(H) Hours of labor in compliance with ORS 279C.520;

(I) Environmental and natural resources regulations (ORS 279C.525);

(J) Payment for medical care and attention to employees (ORS 279C.530(1));

(K) A Contract provision substantially as follows: "All employers, including Contractor, that employ subject workers who work under this Contract in the State of Oregon shall comply with ORS 656.017 and provide the required Workers' Compensation coverage, unless such employers are exempt under ORS 656.126. Contractor shall ensure that each of its subcontractors complies with these requirements." (ORS 279C.530(2));

(L) Maximum hours, holidays and overtime (ORS 279C.540);

(M) Time limitation on claims for overtime (ORS 279C.545);

(N) Prevailing wage rates (ORS 279C.800 to 279C.870);

(O) BOLI Public Works bond (ORS 279C.830(2));

(P) Retainage (ORS 279C.550 to 279C.570);

(Q) Prompt payment policy, progress payments, rate of interest (ORS 279C.570);

(R) Contractor's relations with subcontractors (ORS 279C.580);

(S) Notice of claim (ORS 279C.605);

(T) Contractor's certification of compliance with the Oregon tax laws in accordance with ORS 305.385; and

(U) Contractor's certification that all subcontractors performing Work described in ORS 701.005(2) (i.e., construction Work) will be registered with the Construction Contractors Board or licensed by the State Landscape Contractors Board in accordance with ORS 701.035 to 701.055 before the subcontractors commence Work under the Contract.

ARTICLE 9 LIST OF AGENCIES

In compliance with ORS 279C.525, Sections 9.1 and 9.2 contain lists of federal, state and local agencies of which the Owner has knowledge that have enacted ordinances or regulations relating to environmental pollution and the preservation of natural resources that may affect the performance of the Contract, and Section 9.3 includes a nonexclusive list of laws that Contractor must comply with in accordance with OAR 137-049-0200.

.1 FEDERAL AGENCIES

Agriculture, Department of

Forest Service

Soil Conservation Service

Coast Guard

Defense, Department of

Army Corps of Engineers

Energy, Department of

Federal Energy Regulatory Commission

Environmental Protection Agency

Health and Human Services, Department of

Housing and Urban Development, Department of

Solar Energy and Energy Conservation Bank

Interior, Department of

Bureau of Land Management

Bureau of Indian Affairs

Bureau of Mines

Bureau of Reclamation

Geological Survey

Minerals Management Service

U.S. Fish and Wildlife Service

Labor, Department of

Mine Safety and Health Administration

Occupation Safety and Health Administration

Transportation, Department of

Federal Highway Administration

Water Resources Council

.2 STATE AGENCIES

Administrative Services, Department of

Agriculture, Department of

Soil and Water Conservation Commission

Columbia River Gorge Commission

Energy, Department of

Environmental Quality, Department of

Fish and Wildlife, Department of

Forestry, Department of

Geology and Mineral Industries, Department of

Human Resources, Department of

Consumer and Business Services, Department of

Land Conservation and Development Commission

Parks and Recreation, Department of

State Lands, Division of

Water Resources, Department of

.3 LOCAL AGENCIES

City Councils

County Courts

County Commissioner, Board of

Design Commissions

Historical Preservation Commission

Planning Commissions

ARTICLE 10 ENUMERATION OF CONTRACT DOCUMENTS

10.1 The Contract Documents, except for Modifications issued after execution of this Agreement, are enumerated as follows:

10.1.1 This Agreement.

10.1.2 The General Conditions.

10.1.3 The Supplementary and other Conditions of the Contract.

10.1.4 The Specifications are those contained in the Project Manual dated **December 5, 2025**.

10.1.5 The Drawings are bound in the project manual.

10.1.6 The Addenda, if any, are as follows:

Portions of Addenda relating to bidding requirements are not part of the Contract Documents unless the bidding requirements are also enumerated in this Article 10.

10.1.7 Other documents, if any, forming part of the Contract Documents are as follows:

a. Exhibits _____

This Agreement is entered into as of the day and year first written above and is executed in at least three original copies, of which one is to be delivered to the Contractor, one to the Owners Delegated Representative for use in the administration of the Contract, and the remainder to the Owner.

CONTRACTOR TO BE DETERMINED		**JUNCTION CITY SCHOOL DISTRICT**	
By:	_____	**By:**	_____
			Troy Stoops
Title:	_____	**Title:**	**Superintendent**
Date:	_____	**Date:**	_____
Federal ID #:	_____		

ARTICLE 1 GENERAL PROVISION

1.1 BASIC DEFINITIONS

1.1.1 THE CONTRACT DOCUMENTS

The Contract Documents consist of the Agreement between Owner and Contractor (hereinafter the Agreement), the Request for Bids or Proposals. Conditions of the Contract (General, Supplementary and other Conditions), Drawings, Specifications, and Addenda issued prior to execution of the Contract, other documents listed in the Agreement and Modifications issued after execution of the Contract. A Modification is (1) a written amendment to the Contract signed by both parties, (2) a Change Order, (3) a Construction Change Directive or (4) a written order for a minor change in the Work issued by the Consultant. Contractor acknowledges and represents that it has examined all Contract Documents and will examine all Contract Documents created after execution of the Agreement. Contractor represents that such Contract Documents are suitable and sufficient to enable Contractor to timely complete the Work for the Contract Sum within the Contract Time.

1.1.2 THE CONTRACT

The Contract Documents form the Contract for Construction. The Contract represents the entire and integrated agreement between the parties hereto and supersedes prior negotiations, representations or agreements, either written or oral. The Contract may be amended or modified only by a Modification. The Contract Documents shall not be construed to create a contractual relationship of any kind (1) between the Consultant and Contractor, (2) between the Owner and any Subcontractor, including, but not limited to, any Sub-subcontractor, (3) between the Owner and Consultant or (4) between any persons or entities other than the Owner and Contractor. The Consultant shall, however, be entitled to performance and enforcement of obligations under the Contract intended to facilitate performance of the Consultant's duties.

1.1.3 THE WORK

The term "Work" means the construction and services required by the Contract Documents, whether completed or partially completed, and includes any and all labor (including, but not limited to, supervision and management), transportation, materials, equipment and services provided or to be provided by the Contractor to timely fulfill the Contractor's obligations and render the Project complete and usable for its intended purpose. The Work includes all labor, material, equipment and services incidental to or which may be inferred from any of the Contract Documents. The Work may constitute the whole or a part of the Project.

1.1.4 THE PROJECT

The Project is the total construction of which the Work performed under the Contract Documents may be the whole or a part and which may include construction by the Owner or by separate contractors.

1.1.5 THE DRAWINGS

The Drawings are the graphic and pictorial portions of the Contract Documents showing the design, location and dimensions of the Work, generally including plans, elevations, sections, details, schedules and diagrams.

1.1.6 THE SPECIFICATIONS

The Specifications are that portion of the Contract Documents consisting of the written requirements for materials, equipment, systems, standards and workmanship for the Work, and performance of related services.

1.1.7 THE PROJECT MANUAL

The Project Manual is a volume assembled for the Work which may include the bidding requirements, sample forms, Conditions of the Contract and Specifications.

1.2 CORRELATION AND INTENT OF THE CONTRACT DOCUMENTS

1.2.1 The intent of the Contract Documents is to include all items necessary for the proper execution and completion of the Work by the Contractor. The Contract Documents are complementary, and what is required by one shall be as binding as if required by all; performance by the Contractor shall be required only to the extent consistent with the Contract Documents and reasonably inferable from them as being necessary to produce the indicated results. In case of any conflict in the requirements of the Contract Documents, the Contractor is deemed to have included the better Quality and larger Quantity of the Work.

1.2.2 Organization of the Specifications into divisions, sections and articles, and arrangement of Drawings shall not control the Contractor in dividing the Work among Subcontractors or in establishing the extent of Work to be performed by any trade.

1.2.3 Unless otherwise stated in the Contract Documents, words which have well-known technical or construction industry meanings are used in the Contract Documents in accordance with such recognized meanings.

1.3 CAPITALIZATION

1.3.1 Terms capitalized in these General Conditions include those which are (1) specifically defined, (2) the titles of numbered articles and identified references to Paragraphs, Subparagraphs and Clauses in the document or (3) the titles of other documents.

1.4 INTERPRETATION

1.4.1 In the interest of brevity the Contract Documents frequently omit modifying words such as "all" and "any" and articles such as "the" and "an," but the fact that a modifier or an article is absent from one statement and appears in another is not intended to affect the interpretation of either statement.

1.5 EXECUTION OF CONTRACT DOCUMENTS

1.5.1 The Contract Documents shall be signed by the Owner and Contractor. If either the Owner or Contractor or both do not sign all the Contract Documents, the Consultant shall identify such unsigned Documents upon request.

1.5.2 Execution of the Agreement by the Contractor is a representation that the Contractor has visited the site, become fully familiar with the nature, location and character of the site and surrounding areas, weather conditions, availability of labor, materials, equipment and services, site conditions, surface conditions, subsurface conditions, the Contract Documents, existing local conditions under which the Work is to be performed, the time period for performance and completion of the Work. Contractor represents that it has performed personal observations and correlated the observations with the requirements of the Contract Documents such that the Contractor is not aware of any discrepancies, omissions, ambiguities or conflicts in or among any of the Contract Documents.

1.6 OWNERSHIP AND USE OF DRAWINGS, SPECIFICATIONS AND OTHER INSTRUMENTS OF SERVICE

1.6.1 The Drawings, Specifications and other documents, including any in electronic form, prepared by the Consultant and the Consultant's consultants are documents through which the Work to be executed by the Contractor is described. The Contractor may retain one record set. Neither the Contractor nor any

Subcontractor, including, but not limited to, any Sub-subcontractor or material or equipment supplier shall own or claim any intellectual property rights in the Drawings, Specifications and other documents prepared by the Consultant or the Consultant's consultants. All copies of the documents, except the Contractor's record set, shall be returned or suitably accounted for to the Consultant, on request, upon completion of the Work. The Drawings, Specifications and other documents prepared by the Consultant and the Consultant's consultants, and copies thereof furnished to the Contractor, are for use solely with respect to this Project. They are not to be used by the Contractor or any Subcontractor, including, but not limited to, any Sub-subcontractor or material or equipment supplier on other projects or for additions to this Project outside the scope of the Work without the specific written consent of the Owner, Consultant and the Consultant's consultants. The Contractor, Subcontractors, including, but not limited to, any Sub-subcontractors and material or equipment suppliers are authorized to use and reproduce applicable portions of the Drawings, Specifications and other documents prepared by the Consultant and the Consultant's consultants appropriate to and for use in the execution of their Work under the Contract Documents only. All copies made under this authorization shall bear the statutory copyright notice, if any, shown on the Drawings, Specifications and other documents prepared by the Consultant and the Consultant's consultants. Submittal or distribution to meet official regulatory requirements or for other purposes in connection with this Project is not to be construed as publication in derogation of the any intellectual property right or other reserved rights.

ARTICLE 2 OWNER

2.1 GENERAL

2.1.1 The Owner is the entity identified as such in the Agreement and is referred to throughout the Contract Documents. The Owner may designate in writing a representative who subject to the limitations provided by law, shall have express authority to bind the Owner with respect to all matters requiring the Owner's approval or authorization. Except as otherwise provided in Subparagraph 4.1, the Consultant does not have such authority. The term "Owner" means the Owner or the Owner's Authorized Representative.

2.2 INFORMATION AND SERVICES REQUIRED OF THE OWNER

2.2.1 Except for permits and fees, including those required under Subparagraph 3.7, which are the responsibility of the Contractor under the Contract Documents, the Owner shall secure and pay for necessary approvals, easements, assessments and charges required for construction, use or occupancy of permanent structures or for permanent changes in existing facilities.

2.3 OWNER'S RIGHT TO STOP THE WORK

2.3.1 If the Contractor fails to correct Work which is not in accordance with the requirements of the Contract Documents as required by Paragraph 1.1.3, or fails to carry out Work in accordance with the Contract Documents, the Owner may issue a written order to the Contractor to stop the Work, or any portion thereof, until the cause for such order has been eliminated; however, the right of the Owner to stop the Work shall not give rise to a duty on the part of the Owner to exercise this right for the benefit of the Contractor or any other person or entity, nor give rise to any claim for additions to the Contract Sum or Contract Time.

2.3.2 The Owner shall, in addition to the Right to Stop the Work, have the right to require that the Contractor replace or remove construction personnel assigned to the Work, if, in the Owner’s sole determination, specific construction personnel are impairing or impeding the prosecution of the Work.

2.4 OWNER'S RIGHT TO CARRY OUT THE WORK

2.4.1 If the Contractor defaults or neglects to carry out the Work in accordance with the Contract Documents and fails within a seven-day period after receipt of written notice from the Owner to commence and continue correction of such default or neglect with diligence and promptness, the Owner may, immediately without prejudice to other remedies the Owner may have, correct such deficiencies. In such case an appropriate

Change Order shall be issued deducting from payments then or thereafter due the Contractor the reasonable cost of correcting such deficiencies, including Owner's expenses and compensation for the Consultant's additional services made necessary by such default, neglect or failure. Such change order shall be deemed signed by the Contractor for the purposes of this Agreement even if the Contractor fails to physically sign such Change Order. If payments then or thereafter due the Contractor are not sufficient to cover such amounts, the Contractor shall promptly pay the difference to the Owner. The rights stated herein shall be in addition to and not in lieu of any rights afforded the Owner.

ARTICLE 3 CONTRACTOR

3.1 GENERAL

3.1.1 The Contractor is the person or entity identified as such in the Agreement and is referred to throughout the Contract Documents as if singular in number. The term "Contractor" means the Contractor or the Contractor's Authorized Representative.

3.1.2 The Contractor shall perform and complete the Work in accordance with the Contract Documents for the Contract Sum and within the Contract Time.

3.1.3 The Contractor shall not be relieved of obligations to perform the Work in accordance with the Contract Documents either by activities or duties of the Consultant in the Consultant's administration of the Contract, or in the performance of its obligations or by tests, inspections or approvals required or performed by persons other than the Contractor.

3.2 REVIEW OF CONTRACT DOCUMENTS AND FIELD CONDITIONS BY CONTRACTOR

3.2.1 Since the Contract Documents are complementary, before starting each portion of the Work, the Contractor shall carefully study and compare the various Drawings and other Contract Documents relative to that portion of the Work, as well as the information furnished by the Owner, shall take field measurements of any existing conditions, including all general reference points and interfering site conditions related to that portion of the Work and shall observe any conditions at the site affecting it and shall carefully compare such field measurements and conditions and other information known to the Contractor with the Contract Documents before commencing such activities. These obligations are for the purpose of facilitating construction by the Contractor and are not for the purpose of discovering errors, omissions, or inconsistencies in the Contract Documents; however, any errors, inconsistencies or omissions known, recognized or discovered by the Contractor shall be reported promptly to the Consultant in writing as a request for information in such form as the Consultant may require.

3.2.2 Any design errors or omissions noted by the Contractor during this review shall be reported promptly to the Consultant in writing, but it is recognized that the Contractor's review is made in the Contractor's capacity as a contractor and not as a licensed design professional unless otherwise specifically provided in the Contract Documents. The Contractor is not required to ascertain that the Contract Documents are in accordance with applicable laws, statutes, ordinances, building codes, and rules and regulations, but any nonconformity recognized discovered by or made known to the Contractor shall be reported promptly to the Consultant in writing. The accuracy of grades, elevations, dimensions, locations or otherwise of existing conditions are not warranted to be accurate. The Contractor is solely responsible for verifying the accuracy of grades, elevations, dimensions, locations or otherwise of existing conditions prior to entering into the Contract.

3.2.3 If the Contractor believes that additional cost or time is involved because of clarifications or instructions issued by the Consultant in response to the Contractor's notices or requests for information pursuant to Subparagraphs 3.2.1 and 3.2.2, the Contractor shall make Claims as provided in Subparagraphs 15.1.6 and 15.1.7. If the Contractor fails to perform the obligations of Subparagraphs 3.2.1 and 3.2.2, the Contractor shall pay such costs and damages to the Owner as would have been avoided if the Contractor had performed such obligations. Except as provided herein, the Contractor shall not be

liable to the Owner or Consultant for damages resulting from errors, inconsistencies or omissions in the Contract Documents or for differences between field measurements or conditions and the Contract Documents unless the Contractor discovered, had knowledge of, recognized or should have recognized such error, inconsistency, omission or difference and failed to report it to the Owner and to the Consultant or accepted the responsibility to verify the same. If the Contractor performs any construction activity it knows or reasonably should have known involves an error, inconsistency or omission in the Contract Documents or reports referenced therein without such notice to the Owner and the Consultant, the Contractor shall assume responsibility for such performance and shall bear the costs attributed to the correction.

3.2.4. In addition to and not in derogation of the Contractor's duties the Contractor shall take all field measurements and verify all field conditions and shall carefully compare such field measurements and conditions with all other information known to the Contractor or included in any of the Contract Documents before commencing any construction activity for the Work. The Owner shall not be liable for any errors, inconsistencies or omissions which should have been reasonably discovered and the Contractor shall report in writing to the Consultant and Owner any errors, inconsistencies or omissions.

3.2.5. Any investigations of subsurface conditions have been made for design purposes only. The results of these investigations may be available for the convenience of the Bidders and the Sub-bidders but are not a part of the Contract Documents. While the Contractor may rely on such investigation results there is no representations or warranties, express or implied that the conditions indicated are representative of those existing at the site or that unforeseen developments may not occur. The Contractor is solely responsible for reasonably interpreting the information and extrapolating beyond the location of each individual boring, test pit, or other testing location.

3.2.6. The Contractor shall do no work without applicable Drawings, Specifications, or written modifications or, where required, Shop Drawings, Product Data, or Samples, unless instructed to do so in writing by the Consultant and Owner.

3.3 SUPERVISION AND CONSTRUCTION PROCEDURES

3.3.1 The Contractor shall supervise and direct the Work, using the Contractor's best skill and attention. The Contractor shall be solely responsible for and have control over construction means, methods, techniques, sequences and procedures and for coordinating all portions of the Work under the Contract. Contractor shall review any specified construction or installation procedure and shall advise the Owner and the Consultant in writing if the specified procedure deviates from acceptable construction practices will impact any warranty or if the Contractor has any objection thereto.

3.3.2 The Contractor shall be responsible to the Owner for acts and omissions of the Contractor's employees, Subcontractors, of any tier, and their agents and employees, and any other persons or entities performing portions of the Work for or on behalf of the Contractor or any Subcontractors of any tier and for any damages, losses, costs and expenses resulting from such acts or omissions.

3.3.3 The Contractor shall be responsible for inspection of portions of Work already performed to determine that such portions are in proper condition to receive subsequent Work.

3.3.4. The Contractor shall inspect, prior to installation, all materials and equipment delivered to, installed at, or fabricated at the site and shall reject that which will not conform to the Contract Documents when fully and properly installed.

3.4 LABOR AND MATERIALS

3.4.1 Unless otherwise provided in the Contract Documents, the Contractor shall provide and pay for labor, materials, equipment, tools, telephone, data transmission, construction equipment and machinery, water,

heat, utilities, transportation, and other facilities and services necessary for proper execution and completion of the Work, whether temporary or permanent and whether or not incorporated or to be incorporated in the Work.

3.4.2 The Contractor may make substitutions only with the written consent of the Owner, after evaluation by the Consultant and in accordance with a Change Order.

3.4.3 The Contractor shall enforce strict discipline and good order among the Contractor's employees and other persons carrying out the Contract. The Contractor shall not permit employment of unfit persons or persons not skilled in tasks assigned to them.

3.5 WARRANTY

3.5.1 The Contractor warrants to the Owner and Consultant that the Work, including, but not limited to, any and all materials and equipment furnished under the Contract will be of good quality and new unless otherwise required or permitted by the Contract Documents, that the Work will be performed in a workmanlike manner and will be free from defects not inherent in the quality required or permitted, and that the Work will conform to the requirements of the Contract Documents. Work not conforming to these requirements, including substitutions not properly approved and authorized, may be considered defective. The Contractor's warranty excludes remedy for damage or defect caused by abuse, modifications not executed by the Contractor, improper or insufficient maintenance, improper operation, or normal wear and tear and normal usage. If required by the Consultant, the Contractor shall furnish satisfactory evidence as to the kind and quality of materials and equipment. In addition, the Contractor assigns to the Owner any and all warranties. The Contractor further warrants that all construction activity of the Work shall be performed on the Work so as to preserve all such warranties. To the extent that any warranty is non-assignable, Contractor warrants that it will pursue such warranty claim for the use and benefit of the Owner without cost or expense to the owner. The Contractor shall require this provision to be included in all subcontracts of any tier.

3.6 TAXES

3.6.1 The Contractor shall pay as and when due_sales, consumer, property, occupational, Social Security benefits, unemployment compensation, use and similar taxes, excises, duties and assessments for the Work provided by the Contractor.

3.7 PERMITS, FEES AND NOTICES

3.7.1 Unless otherwise provided in the Contract Documents, the Contractor shall secure and pay for the building permit and other permits and governmental fees, licenses and inspections necessary for proper execution and completion of the Work which are customarily secured after execution of the Contract and which are legally required when bids are received, negotiations concluded or the Contract is executed. To the extent that there is any difference in these requirements the most stringent requirements on the Contractor shall apply.

3.7.2 The Contractor shall comply with and give notices required by laws, ordinances, rules, regulations and lawful orders of public authorities applicable to performance of the Work. If the Contractor fails to comply or give such notices it will be liable for and shall to the fullest extent permitted by law defend indemnify and hold the Owner and Consultant and their respective employees, officers and agents harmless from any costs, loss, penalty or damage.

3.7.3 Except as otherwise provided herein, and except for bidder-design work if any, it is not the Contractor's responsibility to ascertain that the Contract Documents are in accordance with applicable laws, statutes, ordinances, building codes, and rules and regulations. However, if the Contractor becomes aware, gains knowledge, recognizes or observes that portions of the Contract Documents are at variance therewith, the

Contractor shall promptly notify the Consultant and Owner in writing, and necessary changes shall be accomplished by appropriate Modification.

3.7.4 If the Contractor performs Work knowing the construction activity to be contrary to laws, statutes, ordinances, building codes, and rules and regulations without such notice to the Consultant and Owner, the Contractor shall assume appropriate responsibility for such Work and shall bear the costs, loss, damages and penalties attributable to correction.

3.8 ALLOWANCES

3.8.1 The Contractor shall include in the Contract Sum any and all allowances stated in the Contract Documents. Items covered by allowances shall be supplied for such amounts and by such persons or entities as the Owner may direct, but the Contractor shall not be required to employ persons or entities to whom the Contractor has reasonable objection.

3.8.2 Unless otherwise provided in the Contract Documents:

.1 allowances shall cover the cost to the Contractor of materials and equipment delivered at-the site and all required taxes, less applicable trade discounts;

.2 Contractor's costs for unloading and handling at the site, labor, installation costs, overhead, profit and other expenses contemplated for stated allowance amounts shall be included in the Contract Sum but not in the allowances;

.3 whenever costs are more than or less than allowances, the Contract Sum shall be adjusted accordingly by Change Order. The amount of the Change Order shall reflect (I) the difference between actual costs and the allowances under Clause 3.8.2.1 and (2) changes in Contractor's costs under Clause 3.8.2.2.

3.8.3 Materials and equipment under an allowance shall be selected by the Owner in sufficient time to avoid delay in the Work.

3.9 SUPERINTENDENT

3.9.1 The Contractor shall employ an experienced and competent superintendent and necessary assistants who shall be in attendance at the Project site at all times during performance of the Work including completion of the punch list. The Contractor shall notify the Consultant and the Owners Representative as to the identity of the superintendent who shall not be changed during the course of the Work without prior written notification to the Consultant and Owner Representative. The superintendent shall represent the Contractor, and communications given to the superintendent shall be as binding as if given to the Contractor. Important communications shall be confirmed in writing. Other communications shall be similarly confirmed on written request in each case.

3.10 CONTRACTOR'S CONSTRUCTION SCHEDULES

3.10.1 The Contractor, promptly and within ten (10) days after being awarded the Contract, shall prepare and submit for the Owner's and Consultant's information a preliminary Contractor's construction schedule for the Work consistent with the with the requirements of the Contract Documents. Prior to submitting its first Application for Payment, the Contractor, after consultation with its subcontractors, shall submit six (6) hard copies and one electronic copy of the Contractor’s construction schedule consistent with the requirements of the Contract Documents. The schedule shall not exceed time limits current under the Contract Documents, shall be revised at appropriate intervals as required by the conditions of the Work and Project, shall be related to the entire Project to the extent required by the Contract Documents, and shall provide for expeditious and practicable execution of the Work. The construction schedule shall not be changed without the prior written consent of the Owners Representative.

3.10.2 The Contractor shall prepare and keep current, for the Consultant's review, a schedule of submittals which is coordinated with the Contractor's construction schedule and allows the Owner and the Consultant reasonable time to review in accordance with the Specifications and submittal procedures. The Contractor should expect a response time of approximately ten (10) days from the Consultant and Consultant's consultants. Neither the Consultant nor Owner can represent or guarantee response times from governmental authorities, such as permitting agencies. Neither the Contractor's preparation, nor the Consultant's receipt or review shall modify the Contractor's responsibility to make required submittals or to do so in a timely manner.

3.10.3 The Contractor shall perform the Work in accordance with the most recent schedules submitted to the Owner and accepted by the Owner and shall promptly notify the Owner of any deviations from the schedule. Should the Contractor fail to comply with the schedule, or in the Owner's opinion fail, refuse, or neglect to supply a sufficient amount of labor, materials, equipment or services in the prosecution of the Work, the Owner shall have the right to direct the Contractor to furnish such additional labor, materials, equipment or services to comply with the schedule and all costs thereof shall be borne by the Contractor and shall not increase the Contract Sum. All schedules submitted shall be in the form acceptable to the Owner using critical path methodology (CPM) clearly showing overall Project and specific items and tasks of construction activities, dependencies and durations as well as overall and specific commencement and completions dates. The critical path activities shall be highlighted, float and non-critical activities shall be shown and the start and stop times for each activity shall be listed. Float belongs to the benefit of the Project for the Owner's use and no float shall be used without the Owner's written approval. The Contractor shall at all times monitor the progress of the Work for conformance with the CPM schedule accepted by the Owner and shall promptly advise the Owner and Consultant of any impacts or delays or potential impacts or delays. The Contractor shall also update the construction schedule to reflect actual conditions and shall propose plans in order to avoid or correct any impact or delays.

3.11 DOCUMENTS AND SAMPLES AT THE SITE

3.11.1 The Contractor shall maintain at the site for the Owner one (1) record copy of the Drawings, Specifications, Addenda, Change Orders and other Modifications, in good order and marked currently to record field changes and selections made during construction, and one (1) record copy of approved Shop Drawings, Product Data, Samples and similar required submittals. These shall be accessible to inspectors and available to the Consultant and Owner and shall be delivered to the Consultant for submittal to the Owner upon completion of the Work and before Contractor's request for final payment.

3.12 SHOP DRAWINGS, PRODUCT DATA AND SAMPLES

3.12.1 Shop Drawings are drawings, diagrams, schedules and other data specially prepared for the Work by the Contractor or a Subcontractor, Sub-subcontractor, manufacturer, supplier or distributor to illustrate some portion of the Work.

3.12.2 Product Data are illustrations, standard schedules, performance charts, instructions, brochures, diagrams and other information furnished by the Contractor to illustrate materials or equipment for some portion of the Work.

3.12.3 Samples are physical examples which illustrate materials, equipment or workmanship and establish standards by which the Work will be judged.

3.12.4 Shop Drawings, Product Data, Samples and similar submittals are not Contract Documents. The purpose of their submittal is to demonstrate for those portions of the Work for which submittals are required by the Contract Documents the way by which the Contractor proposes to conform to the information given and the design concept expressed in the Contract Documents. Review by the Consultant or any other person is subject to the limitations of Subparagraph 4.2.7. Information submittals upon which the Consultant is not expected to take responsive action may be so identified in the Contract Documents.

Submittals which are not required by the Contract Documents may be returned by the Consultant without action.

3.12.5 The Contractor shall review for compliance with the Contract Documents, approve and submit to the Consultant, Shop Drawings, Product Data, Samples and similar submittals required by the Contract Documents with reasonable promptness and in such sequence as to cause no delay in the Work or in the activities of the Owner or of separate contractors. Submittals which are not marked as reviewed for compliance with the Contract Documents and approved by the Contractor may be returned by the Consultant without action.

3.12.6 By approving and submitting Shop Drawings, Product Data, Samples and similar submittals, the Contractor represents that the Contractor has determined and verified materials, field measurements and field construction criteria related thereto, or will do so, and has checked and coordinated the information contained within such submittals with the requirements of the Work and of the Contract Documents.

3.12.7 The Contractor shall perform no portion of the Work for which the Contract Documents require submittal and review of Shop Drawings, Product Data, Samples or similar submittals until the respective submittal has been approved by the Consultant.

3.12.8 The Work shall be in accordance with approved submittals except that the Contractor shall not be relieved of responsibility for deviations from requirements of the Contract Documents by any approval of Shop Drawings, Product Data, Samples or similar submittals unless the Contractor has specifically informed the Consultant and Owner in writing of such deviation at the time of submittal and (1) the Consultant has given specific written approval to the specific deviation as a minor change in the Work, or (2) a Change Order or Construction Change Directive has been issued authorizing the deviation. The Contractor shall not be relieved of responsibility for errors or omissions in Shop Drawings, Product Data, Samples or similar submittals by the, any person's approval thereof. The Contractor shall be solely responsible for errors or omissions in all submittals and Shop Drawings, whether or not the submittals and Shop Drawings have been reviewed or approved by the Consultant or the Owner.

3.12.9 The Contractor shall direct specific attention, in writing or on resubmitted Shop Drawings, Product Data, Samples or similar submittals, to revisions other than those requested by the Consultant on previous submittals. In the absence of such written notice, any person's approval of a resubmission shall not apply to such revisions. Contractor shall submit Shop Drawings, Product Data, Samples and similar submittals in forms and in a manner reasonably acceptable to the Consultant. Contractor shall submit no less than two (2) copies or examples for review of any Shop Drawings, Product Data, Samples or similar submittals at Contractor's sole cost and expense.

3.12.10 The Contractor shall not be required to provide professional services which constitute the practice of Architecture or engineering unless such services are specifically required by the Contract Documents for a portion of the Work or unless the Contractor needs to provide such services in order to carry out the Contractor's responsibilities for construction means, methods, techniques, sequences and procedures. The Contractor shall not be required to provide professional services in violation of applicable law. If professional design services or certifications by a design professional related to systems, materials or equipment are specifically required of the Contractor by the Contract Documents, the Owner and the Consultant will specify all performance and design criteria that such services must satisfy. The Contractor shall cause such services or certifications to be provided by a properly licensed design professional, whose signature and seal shall appear on all drawings, calculations, specifications, certifications, Shop Drawings and other submittals prepared by such professional. Any of Contractor's (or any subcontractor's) design or engineering professionals shall carry errors and omissions coverage of at least $1,000,000 for the design and engineering of such Work. The premium for errors and omissions coverage is included in the Contract Sum. Shop Drawings and other submittals related to the Work designed or certified by such professional, if prepared by others, shall bear such professional's written approval when submitted to the Consultant. The Owner and the Consultant shall be entitled to rely upon the adequacy, accuracy and completeness of the services, certifications or approvals performed by such design professionals, provided the Owner and

Consultant have specified to the Contractor all performance and design criteria that such services must satisfy. Pursuant to this Subparagraph 3.12.10, the Consultant will review, approve or take other appropriate action on submittals only for the limited purpose of checking for conformance with information given and the design concept expressed in the Contract Documents. The Contractor shall not be responsible for the adequacy of the performance or design criteria required by the Contract Documents.

3.13 USE OF SITE

3.13.1 The Contractor shall confine operations at the site to areas permitted by law, ordinances, permits and the Contract Documents and shall not unreasonably encumber the site with materials or equipment. Notwithstanding anything contained in the Contract Documents to the contrary, the Contractor shall, as part of the Work, not disrupt or interfere in any manner with any of the Owner's or Owner's authorized provider's operations at the Project site or any other locations, including, without limitation any and all educational, social, athletic or recreational programs, activities, classes or events. Contractor shall not park or otherwise utilize any other area designated by the Owner or typically used by Owner's employees, staff, students, parents or visitors or local residents or businesses.

3.14 CUTTING AND PATCHING

3.14.1 The Contractor shall be responsible for cutting, fitting or patching required to complete the Work or to make its parts fit together properly.

3.14.2 The Contractor shall not damage or endanger a portion of the Work or fully or partially completed construction of the Owner or separate contractors by cutting, patching or otherwise altering such construction, or by excavation. The Contractor shall not cut or otherwise alter such construction by the Owner or a separate contractor except with written consent of the Owner and of such separate contractor; such consent shall not be unreasonably withheld. The Contractor shall not unreasonably withhold from the Owner or a separate contractor the Contractor's consent to cutting or otherwise altering the Work. To the extent that the Work involves renovation, alteration or repair of existing improvements, cutting and patching essential for the Project shall be successfully completed and Contractor shall perform the Work so that it is fully integrated into the existing improvements operationally and aesthetically.

3.15 CLEANING UP

3.15.1 The Contractor shall at all times keep the premises and surrounding area free from accumulation of waste materials or rubbish caused by operations under the Contract. At completion of the Work, the Contractor shall remove from and about the Project waste materials, rubbish, the Contractor's tools, construction equipment, machinery and surplus materials.

3.15.2 If the Contractor fails to clean up as provided in the Contract Documents, the Owner may do so and the cost thereof shall be charged to the Contractor.

3.16 ACCESS TO WORK

3.16.1 The Contractor shall provide the Owner and Consultant and their employees. agents and officers access to the Work in preparation and progress wherever located.

3.17 ROYALTIES, PATENTS AND COPYRIGHTS

3.17.1 The Contractor shall pay all royalties and license fees. The Contractor shall defend suits or claims for infringement of copyrights and patent rights and shall hold the Owner and Consultant harmless from loss on account thereof, but shall not be responsible for such defense or loss when a particular design, process or product of a particular manufacturer or manufacturers is required by the Contract Documents or where the copyright violations are contained in Drawings, Specifications or other documents prepared by

the Owner or Consultant. However, if the Contractor has reason to believe that the required design, process or product is an infringement of a copyright or a patent, the Contractor shall be responsible for such loss unless such information is promptly furnished to the Consultant in writing.

3.18 INDEMNIFICATION

3.18.1 To the fullest extent permitted by law, the Contractor shall indemnify and hold harmless the Owner, Consultant, Consultant's consultants, and agents and employees of any of them from and against claims, damages, losses and expenses, including, but not limited to, attorneys' fees, arising out of or resulting from performance of the Work, provided that such claim, damage, loss or expense is attributable to bodily injury, sickness, disease or death, or to injury to or destruction of tangible property (other than the Work itself), the extent caused by the negligent acts or omissions of the Contractor, any Subcontractor, anyone directly or indirectly employed by them or anyone for whose acts they may be liable, regardless of whether or not such claim, damage, loss or expense is caused in part by a party indemnified hereunder. Such obligation shall not be construed to negate, abridge, or reduce other rights or obligations of indemnity which would otherwise exist as to a party or person described in this Paragraph 3.18. To the extent claims, damages, losses or expenses are covered by Project Management Protective Liability insurance purchased by the Contractor in accordance with Paragraph 11.2, the parties shall look first to such coverage for indemnified claims.

3.18.2 In claims against any person or entity indemnified under this Paragraph 3.18 by an employee of the Contractor, Subcontractor, anyone directly or indirectly employed by them or anyone for whose acts they may be liable, the indemnification obligation under Subparagraph 3.18.1 shall not be limited by a limitation on amount or type of damages, compensation or benefits payable by or for the Contractor or a Subcontractor under workers' compensation acts, disability benefit acts or other employee benefit acts.

3.18.3 If any provision of this Contract is determined to require either party to indemnify, defend, reimburse, hold harmless or provide insurance to the other party (or that party's insurers or sureties) in a manner that would violate applicable law (including but not limited to ORS 30.140 or ORS 30.145), then the offending provision shall be construed such that it is given the broadest meaning and effect allowed by law.

3.18.4 The indemnities and other covenants of this Section 3.18 shall survive the termination of the Contract.

ARTICLE 4 ADMINISTRATION OF THE CONTRACT

4.1 CONSULTANT OR OWNER'S REPRESENTATIVE

4.1.1 The term "Consultant" as used in the Contract Documents, shall mean ZCS Inc. and "Owner's Representative", as used in the Contract Documents, shall mean HMK Company (HMKCO), and its respective personnel.

4.1.1.1 If a licensed Consultant is engaged by Owner who is not designated as the "Owner's Representative", the Owner shall make written directive and notification to Contractor, and the Owner's Representative shall perform any contract administration duties of Consultant that the Owner may designate. For ease of reference and consistency, the term "Consultant" shall be used in the Contract Documents to refer to the contract administrator.

4.1.2 Duties, responsibilities and limitations of authority of the Consultant as set forth in the Contract Documents shall not be restricted, modified or extended without written consent of the Owner, and Consultant.

4.1.3 If the employment of the Consultant is terminated, the Owner shall employ a new Consultant under such terms and conditions as are agreeable between the Owner and the new Consultant.

4.2 CONSULTANT'S ADMINISTRATION OF THE CONTRACT

4.2.1 The Consultant may provide administration of the Contract as described in the Contract Documents, and may be an Owner's representative (1) during construction, (2) until final payment is due and (3) with the Owner's concurrence, from time to time during the one-year period for correction of Work described in Paragraph 12.2. The Consultant will have authority to act on behalf of the Owner only to the extent provided in the Contract Documents, unless otherwise modified in writing in accordance with other provisions of the Contract.

4.2.2 The Consultant, as a representative of the Owner, will visit the site at intervals appropriate to the stage of the Contractor's operations (1) to become generally familiar with and to keep the Owner informed about the progress and quality of the portion of the Work completed, and (2) to determine in general if the Work is being performed in a manner indicating that the Work, when fully completed, will be in accordance with the Contract Documents. However, the Consultant will not be required to make exhaustive or continuous on-site inspections to check the quality or quantity of the Work. The Consultant will neither have control over or charge of, nor be responsible for the construction means, methods, techniques, sequences or procedures, or for the safety precautions and programs in connection with the Work, since these are solely the Contractor's rights and responsibilities under the Contract Documents, except as provided in Subparagraph 3.3.1.

4.2.3 The Consultant will not be responsible for the Contractor's failure to perform the Work in accordance with the requirements of the Contract Documents. The Consultant will not have control over or charge of and will not be responsible for acts or omissions of the Contractor, any Subcontractors, or their agents or employees, or any other persons or entities performing portions of the Work.

4.2.4 Communications Facilitating Contract Administration. The Owner, Owners Representative and Contractor may communicate with each other through the Consultant about matters arising out of or relating to the Contract. The Contractor shall also PROVIDE THE OWNER AND OWNERS REPRESENTATIVE WITH A DIRECT COPY OF ALL WRITTEN COMMUNICATIONS TO THE CONSULTANT, including all notices, requests, Claims and potential changes in the Contract Sum or Time, but not including Shop Drawings, Product Data or Samples. Communications by and with the Consultant's consultants shall be through the Consultant. Communications by and with Subcontractors and material suppliers shall be through the Contractor. Communications by and with separate contractors shall be through the Owner.

4.2.5 Based on the Consultant's evaluations of the Contractor's Applications for Payment, the Consultant may review and certify the amounts due the Contractor and will issue Certificates for Payment in such amounts.

4.2.6 The Consultant may have authority to reject Work that does not conform to the Contract Documents. Whenever the Consultant considers it necessary or advisable, the Consultant may have authority to require inspection or testing of the Work in accordance with Subparagraphs 13.5.2 and 13.5.3, whether or not such Work is fabricated, installed or completed. However, neither this authority of the Consultant nor a decision made in good faith either to exercise or not to exercise such authority shall give rise to a duty or responsibility of the Consultant to the Contractor, Subcontractors, material and equipment suppliers, their agents or employees, or other persons or entities performing portions of the Work.

4.2.7 The Consultant will review and approve or take other appropriate action upon the Contractor's submittals such as Shop Drawings, Product Data and Samples, but only for the limited purpose of checking for conformance with information given and the design concept expressed in the Contract Documents. The Consultant's action will be taken with such reasonable promptness as to cause no delay in the Work or in the activities of the Owner, Contractor or separate contractors, while allowing sufficient time in the Consultant's professional judgment to permit adequate review. Review of such submittals is not conducted for the purpose of determining the accuracy and completeness of other details such as dimensions and quantities, or for substantiating instructions for installation or performance of equipment or systems, all of which remain the responsibility of the Contractor as required by the Contract Documents. The Consultant's

review of the Contractor's submittals shall not relieve the Contractor of the obligations under Paragraphs 3.3, 3.5 and 3.12. The Consultant's review shall not constitute approval of safety precautions or, unless otherwise specifically stated by the Consultant, of any construction means, methods, techniques, sequences or procedures. The Consultant's approval of a specific item shall not indicate approval of an assembly of which the item is a component.

4.2.8 The Consultant may prepare Change Orders and Construction Change Directives, and may authorize minor changes in the Work as provided in Paragraph 7.4.

4.2.9 The Consultant may conduct inspections to determine the date or dates of Substantial Completion and the date of final completion, may receive and forward to the Owner, for the Owner's review and records, written warranties and related documents required by the Contract and assembled by the Contractor, and may issue a final Certificate for Payment upon compliance with the requirements of the Contract Documents.

4.2.10 If the Owner and Consultant designate, the Consultant will provide one or more project representatives to assist in carrying out the Consultant's responsibilities at the site.

4.2.11 The Consultant may interpret and decide matters concerning performance under and requirements of, the Contract Documents on written request of either the Owner or Contractor. The Consultant's response to such requests will be made in writing within any time limits agreed upon or otherwise with reasonable promptness. If no agreement is made concerning the time within which interpretations required of the Consultant shall be furnished in compliance with this Paragraph 4.2, then delay shall not be recognized on account of failure by the Consultant to furnish such interpretations until 5 days after written request is made for them.

4.2.12 Interpretations and decisions of the Consultant, if any, will be consistent with the intent of and reasonably inferable from the Contract Documents and will be in writing or in the form of drawings. When making such interpretations and initial decisions, the Consultant will endeavor to secure faithful performance by both Owner and Contractor, will not show partiality to either and will not be liable for results of interpretations or decisions so rendered in good faith.

4.2.13 The Consultant's decisions on matters relating to aesthetic effect may be final if consistent with the intent expressed in the Contract Documents. The terms and conditions of the Owner's agreement with the Consultant shall govern the Consultant's responsibilities.

ARTICLE 5 SUBCONTRACTORS

5.1 DEFINITIONS

5.1.1 The term "Subcontractor" is referred to throughout the Contract Documents as if singular in number and means a Subcontractor or an authorized representative of the Subcontractor. The term "Subcontractor" does not include a separate contractor or subcontractors of a separate contractor.

5.2 AWARD OF SUBCONTRACTS AND OTHER CONTRACTS FOR PORTIONS OF THE WORK

5.2.1 The Contractor shall not change a Subcontractor, person or entity previously selected if the Owner or Consultant makes reasonable objection to such substitute. The Contractor shall require bids and contracts from Subcontractors to be submitted in a format which specifically sets for the amount of any credit that the Owner will ultimately be the benefit of, if all or any portion of any Subcontractor’s Work is deleted. In no instance shall the Owner be obligated to pay any fee, profit or overheard for Work which is deleted from any Subcontractor's scope or from that of the Contractor.

5.3 SUBCONTRACTUAL RELATIONS

5.3.1 By appropriate agreement, written where legally required for validity, the Contractor shall require each Subcontractor, to the extent of the Work to be performed by the Subcontractor, to be bound to the Contractor by terms of the Contract Documents, and to assume toward the Contractor all the obligations and responsibilities, including the responsibility for safety of the Subcontractor's Work, which the Contractor, by these Documents, assumes toward the Owner or Consultant. Each subcontract agreement shall preserve and protect the rights of the Owner and Consultant under the Contract Documents with respect to the Work to be performed by the Subcontractor so that subcontracting thereof will not prejudice such rights. Where appropriate, the Contractor shall require each Subcontractor to enter into similar agreements with other Subcontractors. The Contractor shall make available to each proposed Subcontractor, prior to the execution of the subcontract agreement, copies of the Contract Documents to which the Subcontractor will be bound, and, upon written request of the Subcontractor, identify to the Subcontractor terms and conditions of the proposed subcontract agreement which may be at variance with the Contract Documents. Subcontractors will similarly make copies of applicable portions of such documents available to their respective proposed Sub-subcontractors.

5.4 CONTINGENT ASSIGNMENT OF SUBCONTRACTS

5.4.1 Each subcontract agreement for a portion of the Work is assigned by the Contractor to the Owner or to another contractor should Owner so elect and consent, provided that:

.1 assignment is effective only after termination of the Contract by the Owner and only for those subcontract agreements which the Owner accepts by notifying the Subcontractor and Contractor in writing; and

.2 assignment is subject to the prior rights of the surety, if any, obligated under bond relating to the Contract.

5.4.2 Each subcontract shall specifically provide that the Owner (or other contractor) shall only be responsible to the subcontractor for those obligations that accrue after the Owner’s or other contractor’s exercise of rights under the conditional assignment required hereby.

ARTICLE 6 CONSTRUCTION BY OWNER OR BY SEPARATE CONTRACTORS

6.1 OWNER'S RIGHT TO PERFORM CONSTRUCTION AND TO AWARD SEPARATE CONTRACTS

6.1.1 The Owner reserves the right to perform construction or operations related to the Project with the Owner's own forces, and to award separate contracts in connection with other portions of the Project or other construction or operations on the site under Conditions of the Contract identical or substantially similar to these including those portions related to insurance and waiver of subrogation. If the Contractor claims that delay or additional cost is involved because of such action by the Owner, the Contractor shall make such Claim as provided in Paragraph 15.1.

6.1.2 When separate contracts are awarded for different portions of the Project or other construction or operations on the site, the term "Contractor" in the Contract Documents in each case shall mean the Contractor who executes each separate Owner-Contractor Agreement.

6.1.3 The Contractor shall provide for coordination of the activities of the Owner's own forces and of each separate contractor with the Work of the Contractor, who shall cooperate with them. The Contractor shall participate with other separate contractors and the Owner in reviewing their construction schedules when directed to do so. The Contractor shall make without an increase in the Contract Time or Sum any revisions to the construction schedule deemed necessary after a joint review and mutual agreement. The construction schedules shall then constitute the schedules to be used by the Contractor, separate contractors and the Owner until subsequently revised.

6.1.4 Unless otherwise provided in the Contract Documents, when the Owner performs construction or operations related to the Project with the Owner's own forces, the Owner shall be deemed to be subject to the same obligations and to have the same rights which apply to the Contractor under the Conditions of the Contract, including, without excluding others, those stated in Article 3, this Article 6 and Articles 10, 11 and 12.

6.2 MUTUAL RESPONSIBILITY

6.2.1 The Contractor shall afford the Owner and separate contractors reasonable opportunity for introduction and storage of their materials and equipment and performance of their activities, and shall connect and coordinate the Contractor's construction and operations with theirs as required by the Contract Documents.

6.2.2 If part of the Contractor's Work depends for proper execution or results upon construction or operations by the Owner or a separate contractor, the Contractor shall, prior to proceeding with that portion of the Work, promptly report to the Consultant apparent discrepancies or defects in such other construction that would render it unsuitable for such proper execution and results. Failure of the Contractor so to report shall constitute an acknowledgment that the Owner's or separate contractor's completed or partially completed construction is fit and proper to receive the Contractor's Work, except as to defects not then reasonably discoverable.

6.2.3 The Owner shall be reimbursed by the Contractor for costs incurred by the Owner which are payable to a separate contractor because of delays, improperly timed activities or defective construction of the Contractor or any Subcontractors. The Owner shall be responsible to the Contractor for costs incurred by the Contractor because of delays, improperly timed activities, and damage to the Work or defective construction of a separate contractor.

6.2.4 The Contractor shall promptly remedy damage wrongfully caused by the Contractor or Subcontractors to completed or partially completed construction or to property of the Owner or separate contractors as provided in Subparagraph 10.2.5.

6.3 OWNER'S RIGHT TO CLEAN UP

6.3.1 If a dispute arises among the Contractor, separate contractors and the Owner as to the responsibility under their respective contracts for maintaining the premises and surrounding area free from waste materials and rubbish, the Owner may clean up and the Consultant may allocate the cost among those responsible.

ARTICLE 7 CHANGES IN THE WORK

7.1 GENERAL

7.1.1 Changes in the Work may be accomplished after execution of the Contract, and without invalidating the Contract, solely by Change Order, Construction Change Directive or order for a minor change in the Work, subject to the limitations stated in this Article 7 and elsewhere in the Contract Documents.

7.1.2 A Change Order shall be based upon agreement among the Owner, Contractor and Consultant; a Construction Change Directive requires agreement by the Owner and Consultant and may or may not be agreed to by the Contractor; an order for a minor change in the Work may be issued by the Consultant alone.

7.1.3 Changes in the Work shall be performed under applicable provisions of the Contract Documents, and the Contractor shall proceed promptly, unless otherwise provided in the Change Order, Construction Change Directive or order for a minor change in the Work.

7.1.4 Before effectuating a change in the Work, the Owner may request the Contractor to propose the amount of change in the Contract Sum, if any, and the extent of change in the Contract Time, if any, arising from the proposed change in the Work. The Contractor shall submit its responsive proposal as soon as possible and within 14 days and shall in good faith specify the components and amounts by which the Contract Sum and/or Contract Time would change. Labor, materials and equipment shall be limited to and itemized in the manner described in Paragraph 7.5 for the Contractor and major Subcontractors. If the Contractor fails to respond within this time, the Owner may withhold some or all of a progress payment otherwise due until the tardy proposal is received. If the Owner accepts the proposal in writing, the Owner will be immediately bound, the change will be included in a future Change Order, and the change in the Work shall commence expeditiously. The Owner may reject the proposal, in which case the Owner may either not effectuate the change in the Work or may order the change through a Construction Change Directive or an order for a minor change in the Work. The Consultant may confer directly with Subcontractors of any tier concerning any item proposed to the Owner under this Article.

7.2 CHANGE ORDERS

7.2.1 A Change Order is a written instrument which may be prepared by the Consultant and signed by the Owner, Contractor and which may be signed by the Consultant, stating their agreement upon all of the following:

.1 change in the Work;

.2 the amount of the adjustment, if any, in the Contract Sum; and

.3 the extent of the adjustment, if any, in the Contract Time.

7.2.2 Methods used in determining adjustments to the Contract Sum may include those listed in Subparagraph 7.3.3. Agreement on a Change Order shall constitute full and final settlement of all issues and matters related to the change in Work which is subject to the Change Order including, without limitation, any and all direct and indirect costs and all adjustments in the Contract Time and Sum. There shall be no fee due or to become due to the Contractor related to deductive Change Orders.

7.3 CONSTRUCTION CHANGE DIRECTIVES

7.3.1 A Construction Change Directive is a written order which may be prepared by the Consultant and signed by the Owner, and which may be signed by the Consultant, directing a change in the Work prior to agreement on adjustment, if any, in the Contract Sum or Contract Time, or both. The Owner may by Construction Change Directive, without invalidating the Contract, order changes in the Work within the general scope of the Contract consisting of additions, deletions or other revisions, the Contract Sum and Contract Time being adjusted accordingly.

7.3.2 A Construction Change Directive shall be used in the absence of total agreement on the terms of a Change Order.

7.3.3 If the Construction Change Directive provides for an adjustment to the Contract Sum, the adjustment shall be based on one of the following methods:

.1 mutual acceptance of a lump sum properly itemized and supported by sufficient substantiating data to permit evaluation;

.2 unit prices stated in the Contract Documents or subsequently agreed upon;

.3 cost to be determined in a manner agreed upon by the parties (accompanied by an itemized estimate of probable cost) and a mutually acceptable fixed or percentage fee; or

.4 as provided in Subparagraph 7.3.6.

7.3.4 Upon receipt of a Construction Change Directive, the Contractor shall promptly proceed with the change in the Work involved. As soon as possible and within seven (7) days of receipt the Contractor shall advise the Consultant in writing of the Contractor's agreement or disagreement with the proposed adjustment or the method, if any, provided in the Construction Change Directive for determining the proposed adjustment in the Contract Sum or Contract Time. The Contractor's response shall reasonably specify the reasons for its disagreement and the adjustment or other terms that it proposes. Without such timely written response, the Contractor shall conclusively be deemed to have accepted the Owner's adjustment. The Contractor's disagreement shall not relieve the Contractor of its obligations to comply promptly with any written notice issued by the Owner or the Consultant. The adjustment shall then be determined by the Consultant in accordance with the provisions of the Contract Documents.

7.3.5 A Construction Change Directive signed by the Contractor indicates the agreement of the Contractor therewith, including adjustment in Contract Sum and Contract Time or the method for determining them. Such agreement shall be effective immediately and shall be incorporated into and be construed and interpreted as a Change Order.

7.3.6 If the Contractor does not respond promptly or disagrees with the method for adjustment in the Contract Sum, or if cost is to be determined under Clause 7.3.3.3, the Contractor shall keep and present itemized in the categories of Paragraph 7.5 and in such form as the Consultant may prescribe, an itemized accounting together with appropriate supporting data. In order to facilitate checking of such quotations, all proposals, except those so minor that their propriety can be seen be inspection, shall be accompanied by complete itemization of costs, including labor, equipment, material and subcontract costs. Labor, equipment and materials shall be itemized in the manner described in Paragraph 7.5. When major cost items arise from Subcontractors of any tier, these items shall also be similarly itemized. Approval may not be given without such itemization. Failure to provide data within 21 days of the Owner's request shall constitute waiver of any Claim for changes in the Contract Time or Contract Sum. The total cost of any change, including a Claim under Paragraph 15.1 or Paragraph 15.2, shall be limited to the reasonable value, as determined by the Consultant (subject to appeal through the dispute resolution procedure of Paragraph 15.2), of the items in Paragraph 7.5. Unless otherwise agreed in writing by the Owner, the cost shall not exceed the lower of the prevailing cost for the work in the locality of the Project or the cost of the work in the current edition of R.S. Means Company, Inc., Building Construction Cost Data as adjusted to local costs and conditions. The Consultant and the Owner may communicate directly with Subcontractors concerning costs of any Work included in a Construction Change Directive. If the Contractor disagrees with the method for the adjustment in the Contract Time, the adjustment and method shall be referred to the Consultant for determination, and any adjustment shall be limited to the change in the actual critical path of the Contractor's Construction Schedule directly caused thereby.

7.3.7 The amount of credit to be allowed by the Contractor to the Owner for a deletion or change which results in a net decrease in the Contract Sum shall be the largest of (1) the reasonable and prevailing value of the deletion or change; (2) the line item value in the Schedule of Values: or (3) the actual net cost as confirmed by the Consultant. When both additions and credits covering related Work or substitutions are involved in a change, the allowance for overhead and profit shall be figured on the basis of net increase, if any, with respect to that change.

7.3.8 Pending final determination of the total cost of a Construction Change Directive to the Owner and provided that any amounts not in dispute for such changes in the Work shall be included in Applications for Payment accompanied by a Change Order indicating the parties' agreement with part or all of such costs. If the Contractor adds a reservation of rights that has not been initialed b the Owner, all the amounts for the Construction Change Directive shall be considered disputed unless costs are renegotiated or the reservation is withdrawn or changed in a manner satisfactory to the Owner.

7.3.9 When the Owner and Contractor agree with the determination made by the Consultant concerning the adjustments in the Contract Sum and Contract Time, or otherwise reach agreement upon the

adjustments, such agreement shall be effective immediately and shall be recorded by preparation and execution of an appropriate Change Order.

7.4 MINOR CHANGES IN THE WORK

7.4.1 The Consultant and the Owner will have authority to order minor changes in the Work not involving adjustment in the Contract Sum or extension of the Contract Time and not inconsistent with the intent of the Contract Documents. Such changes shall be effected by written order and shall be binding on the Owner and Contractor. The Contractor shall carry out any and all such written orders promptly. If at the option of the Owner, the Consultant exercises any authority, right(s) or duty(ies) stated anywhere in this Agreement or any other Contract Document as an authority, right or duty the Consultant may perform, the Contractor shall comply with, be bound by and respond therewith and thereto, including, but not limited to, the exercise of any authority, right(s) or duty(ies) related to minor work.

7.5 PRICING COMPONENTS

7.5.1 Direct Labor Costs. The total labor cost of any changed Work or of any other increase or decrease in the Contract Sum, including a Claim, shall be limited to the following components:

.1 **Basic wages**: The hourly wage (without markup, fringe benefits or labor burden) not to exceed that specified in the applicable "Intent to Pay Prevailing Wage" for the laborers, apprentices, journeymen, and foremen performing and/or directly supervising the changed Work on the site. The premium portion of overtime wages is not included unless pre-approved by the Owner.

.2 **Fringe benefits**: Fringe benefits paid by the Contractor as established by the Oregon Bureau of Labor and Industries or contributed to labor trust funds as itemized fringe benefits, whichever is applicable. Costs paid or incurred by the Contractor for vacations, per diem, bonuses, stock options, or discretionary payments to employees are not reimbursable.

.3 **Workers' insurances**: Direct contributions to the State of Oregon as industrial insurance; medical aid; and supplemental pension by class and rates established by the Oregon Bureau of Labor and Industries.

.4 **Federal insurances**: Direct contributions required by the Federal Insurance Compensation Act (FICA); Federal Unemployment Tax Act (FUTA); and State Unemployment Compensation Act (SUCA).

7.5.2 Direct Material Costs. This is an itemization, including material invoice, of the quantity and cost of additional materials reasonable and necessary to perform the change in the Work. The unit cost shall be based upon the net cost after all discounts or rebates, freight costs, express charges, or special delivery costs, when applicable. No lump sum costs will be allowed except when approved in advance by the Consultant. Discounts and rebates based on prompt payment may be included, however, if the Contractor offers but the Owner declines the opportunity.

7.5.3 Construction Equipment Usage Costs. This is an itemization of the actual length of time that construction equipment appropriate for the Work will be used solely on the change in the Work at the site times the applicable rental cost as established by the lower of the local prevailing rate published in The Rental Rate Blue Book by Data Quest, San Jose, California, or the actual rate paid to an unrelated third party as evidenced by rental receipts. Actual, reasonable mobilization costs are permitted if the equipment is brought to the Site solely for the change in the Work. If equipment is required for which a rental rate is not established by The Rental Rate Blue Book, an agreed rental rate shall be established for the equipment, which rate and use must be approved by the Consultant prior to performing the work. If more than one rate is applicable, the lowest rate will be utilized. The rates in effect at the time of the performance of the

changed Work are the maximum rates allowable for equipment of modern design and in good working condition and include full compensation for furnishing all fuel, oil, lubrication, repairs, maintenance, and insurance. Equipment not of modern design and/or not in good working condition will have lower rates. Hourly, weekly, and/or monthly rates, as appropriate, will be applied to yield the lowest total cost. The rate for equipment necessarily standing by for future use on the changed Work shall be 50% of the rate established above. The total cost of rental allowed shall not exceed the cost of purchasing the equipment outright.

7.5.4 Cost of Change in Insurance or Bond Premium. This is defined as:

.1 **Contractors' Liability Insurance**: The cost (expressed as a percentage) of any changes in the Contractor's liability insurance arising directly from the changed Work; and

.2 **Bond**: The cost (expressed as a percentage) of the change in the Contractor's premium for the Contractor's bonds arising directly from the changed Work.

Upon request, the Contractor shall provide the Owner with supporting documentation from its insurer or surety of any associated cost incurred.

7.5.5 Subcontractor Costs. These are payments the Contractor makes to Subcontractors for changed Work performed by Subcontractors. The Subcontractors' cost of changed Work shall be determined in the same manner as prescribed in this Paragraph 7.5.

7.5.6 Fee. This is the allowance for all combined overhead, profit and other costs, including all office, home office and site overhead (including project manager, project engineers, project foreman, estimator, superintendent and their vehicles), taxes (except for sales tax), warranty, safety costs, quality control/assurance, purchasing, small or hand tool or expendable charges, preparation of as-built drawings, impact on unchanged Work, Claim preparation, and delay and impact costs of any kind, added to the total cost to the Owner of any Change Order, Construction Change Directive, Claim or any other claim of any kind on this Project. It shall be limited in all cases to the following schedule:

.1 The Contractor shall receive 15% of the cost of any materials supplied or work properly performed by the Contractor's own forces.

.2 The Contractor shall receive 8% of the amount owed directly to a Subcontractor or Supplier for materials supplied or work properly performed by that Subcontractor or Supplier.

.3 Each Subcontractor of any tier shall receive 12% of the cost of any materials properly supplied or work properly performed by its own forces.

.4 Each Subcontractor of any tier shall receive 8% of the amount it properly incurs for materials supplied or work properly performed by its suppliers or subcontractors of any lower tier.

.5 The cost to which this Fee is to be applied shall be determined in accordance with Paragraph 7.5.1-7.5.4.

.6 The total summed Fee of the Contractor and all Subcontractors of any tier shall not exceed 25%. None of the fee percentages authorized in this Paragraph 7.5.6 may be compounded with any other fee percentage or percentages authorized in this paragraph.

If a change in the Work involves both additive and deductive items, the appropriate Fee allowed will be added to the net difference of the items. If the net difference is negative, no Fee will be added to the negative figure as a further deduction.

7.6 Change Proposals. Within the time limits set out in this Section 7.6, after receipt of a Request For Change Order Proposal or a Construction Change Directive, the Contractor shall submit to the Owner and the Architect a written Change Order Proposal setting out any proposed adjustment in the Contract Sum or Contract Time, or both, to which the Contractor believes it (1) would be entitled as a result of the change in the Work proposed in the Request For Change Order Proposal or (2) is entitled as a result of the change in the Work directed by the Construction Change Directive. Such Change Order Proposal may be in the form of a lump sum proposal (with adequate cost substantiation as required by the Owner and calculations showing the amount of markups on costs), or a unit price proposal, or a combination thereof, for a proposed increase in the Contract Sum, and in similar form for a proposed extension of the Contract Time, and otherwise shall be in such form and in such detail as the Owner or the Architect may require. Such Change Order Proposal shall be submitted as soon as practicable after the Contractor's receipt of the Request For Change Order Proposal or the Construction Change Directive, but in no event later that thirty (30) days after the Contractor's receipt of the Request For Change Order Proposal or the Construction Change Directive.

7.7 Writing Required. Contractor shall not be entitled to a Change Order for any change in the Work unless a Change Order has been signed by the Owner or the Owner's Project Manager, a Construction Change Directive issued, a Change Proposal approved by the Owner or the Owner's Project Manager in writing, or a similar written Authorization has been issued by the Owner or the Owner's Project Manager, prior to initiation of such Work.

ARTICLE 8 TIME

8.1 DEFINITIONS

8.1.1 Unless otherwise provided, Contract Time is the period of time, including authorized adjustments, allotted in the Contract Documents for Substantial Completion of the Work.

8.1.2 The date of commencement of the Work is the date established in the Agreement.

8.1.3 The date of Substantial Completion is the date certified by the Consultant in accordance with Paragraph 9.8 and the other requirements and conditions to Substantial Completion in the Contract Documents have been satisfied.

8.1.4 The term "day" as used in the Contract Documents shall mean calendar day unless otherwise specifically defined. Time is expressly declared of the essence as it relates to the performance of the Contractor's Work. Without limiting the foregoing, Contractor must complete the Project in the manner required hereby on the date required hereby. The failure to so complete the Project shall cause the Owner to incur substantial costs and expenses, including, but not limited to, those related to staffing, teachers, management, transportation, publication, communication, signage, and rental, all of which costs and expenses the Contractor shall be liable for.

8.2 PROGRESS AND COMPLETION

8.2.1 Time limits stated in the Contract Documents are of the essence of the Contract. By executing the Agreement the Contractor confirms that the Contract Time is a reasonable period for performing the Work.

8.2.2 The Contractor shall not knowingly, except by agreement or instruction of the Owner in writing, prematurely commence operations on the site or elsewhere prior to the effective date of insurance required by Article 11 to be furnished by the Contractor and Owner. The date of commencement of the Work shall not be changed by the effective date of such insurance. The Contractor shall notify the Owner in writing not less than five days or other agreed period before commencing the Work.

8.2.3 The Contractor shall proceed expeditiously with adequate forces and shall achieve Substantial Completion and Final Completion within the Contract Time.

8.3 DELAYS AND EXTENSIONS OF TIME

8.3.1 If the Contractor is unreasonably delayed at any time .in the commencement or progress of the Work (1) by an act or neglect of the Owner or Consultant, or of an employee of either, or of a separate contractor employed by the Owner, or (2) by changes ordered in the Work only to the extent reflected in approved Change Orders providing for specific extensions of the Contract Time, or (3) b unanticipated, abnormal weather (see Paragraph 15.1.7), or (4) by unexpected industry-wide labor disputes, fire, unusual delay in deliveries, governmental delays (including permit delays not caused by the Owner), unavoidable casualties or other causes beyond the Contractor's control, or (5) by delay authorized by the Owner pending mediation and litigation, or (6) by other causes which the Consultant determines may justify delay, then the Contract Time shall be extended by Change Order for such reasonable time, limited to the change in the actual critical path of the Contractor's Construction Schedule directly caused thereby, as the Consultant may determine consistent with the provisions of the Contract Documents. In no event, however, shall the Contractor be entitled to any extension of time absent proof of (1) delay to an activity on the critical path of the Contract Schedule, also as to actually delay the Project completion beyond the date of Substantial Completion, or (2) delay transforming an activity into the critical path of the Contract Schedule, so as to actually delay the Project completion beyond the date of Substantial Completion.

8.3.2 Claims relating to time shall be made in accordance with applicable provisions of Paragraphs 15.1 and 15.2. That the Owner or Consultant may be aware of the occurrence or existence of a delay through means other than the Contractor’s written notification shall not constitute a waiver of a timely or written notice or Claim.

8.3.3 Contract Sum Change.

.1 If the delay was not caused by the Owner, the Contractor, a Subcontractor of any tier, or the Consultant, or anyone acting on behalf of any of them, the Contractor is entitled only to an increase in the Contract Time in accordance with the Contract Documents, but not a change in the Contract Sum. If the delay was caused by the Contractor, a Subcontractor of any tier, or anyone acting on behalf of any of them, the Contractor is not entitled to an increase in the Contract Time or in the Contract Sum. The Contractor shall not recover damages, an equitable adjustment or an increase in the Contract Sum or Contract Time from the Owner where the Contractor could have reasonably avoided the delay by the exercise of due diligence. The Contractor shall be able to recover an increase in the Contract Sum, consistent with the terms of the Contract Documents, only if a delay in the critical path was unreasonable and caused by the Owner. A Subcontractor is not entitled to damages, an equitable adjustment or an increase in the Contract Sum for any delay that does not increase the Contract Time.

.2 In the event the Contractor (including any Subcontractors of any tier) is held to be entitled to damages from the Owner for delay beyond the payment permitted in Subparagraph 7.5.6, it is agreed that the total combined damages to the Contractor and any Subcontractors of any tier for each day of delay shall be limited to the same daily liquidated damage rate specified in the Contract Documents due the Owner for the Contractor’s delay in achieving Substantial Completion. No damages will be allowed for any time prior to 14 days before receipt of written notice of the Claim of the delay pursuant to Subparagraph 15.2.2.

.3 The Contractor shall not in any event be entitled to damages arising out of actual or alleged loss of efficiency; morale, fatigue, attitude, or labor rhythm; constructive acceleration; home office overhead; expectant under run; trade stacking; reassignment of workers; rescheduling of work, concurrent operations; dilution of supervision; learning curve; beneficial or joint occupancy; logistics; ripple; season change; extended overhead; profit upon damages for delay; impact damages; or similar damages.

.4 The Contractor shall not be entitled to any adjustment in the Contract Time or in the Contract Sum, or to any additional payment of any sort, by reason of the loss or the use of any float time, including time between the Contractor's anticipated completion date and the end of the Contract Time, whether or not the float time is described as such on the Contractor's Construction Schedule.

ARTICLE 9 PAYMENTS AND COMPLETION

9.1 CONTRACT SUM

9.1.1 The Contract Sum is stated in the Agreement and, including authorized adjustments, is the total amount payable by the Owner to the Contractor for performance of the Work under the Contract Documents.

9.2 SCHEDULE OF VALUES

9.2.1 Within seven (7) calendar days of the execution of this the Agreement and with each Application for Payment, the Contractor shall submit to the Consultant a schedule of values in a form satisfactory to the Consultant and Owner allocated to various portions of the Work, prepared in such form and supported by such data to substantiate its accuracy as the Consultant may require. This schedule, unless objected to by the Consultant or Owner, shall be used as a basis for reviewing the Contractor's Applications for Payment.

9.3 APPLICATIONS FOR PAYMENT

9.3.1 At least ten days before the date established for each progress payment, the Contractor shall submit to the Consultant an itemized Application for Payment for operations completed in accordance with the schedule of values. Such application shall be notarized and supported by such data substantiating the Contractor's right to payment as the Owner or Consultant may require, such as copies of requisitions from Subcontractors and material suppliers and reflecting Retainage if provided for in the Contract Documents.

9.3.1.1 As provided in Subparagraph 7.3.8, such applications may include requests for payment on account of changes in the Work which have been properly authorized by Construction Change Directives, or by interim determinations of the Consultant, but not yet included in Change Orders.

9.3.1.2 Such applications may not include requests for payment for portions of the Work for which the Contractor does not intend to pay to any Subcontractor including any material supplier.

9.3.2 Unless otherwise provided in the Contract Documents, payments shall be made on account of materials and equipment delivered and suitably stored at the site for subsequent incorporation in the Work. If approved in advance by the Owner, payment may similarly be made for materials and equipment suitably stored off the site at a location agreed upon in writing. Payment for materials and equipment stored on or off the site shall be conditioned upon compliance by the Contractor with procedures satisfactory to the Owner to establish the Owner's free and clear title to such materials and equipment or otherwise protect the Owner's interest, and shall include the costs of applicable insurance, storage and transportation to the site for such materials and equipment stored off the site.

9.3.3 The Contractor warrants that title to all Work covered by an Application for Payment will pass to the Owner no later than the time of payment. The Contractor further warrants that upon submittal of an Application for Payment all Work for which Certificates for Payment have been previously issued and payments received from the Owner shall, be free and clear of any and all liens, claims, security interests or encumbrances in favor of the Contractor, and any all Subcontractors, including any material suppliers, or

other persons or entities making a claim by reason of having provided labor, materials and equipment relating to the Work.

9.4 CERTIFICATES FOR PAYMENT

9.4.1 The Consultant may, within seven (7) days after receipt of the Contractor's Application for Payment, either issue to the Owner a Certificate for Payment, with a copy to the Contractor, for such amount as the Consultant determines is properly due, or notify the Contractor and Owner in writing of the Consultant's reasons for withholding certification in whole or in part as provided in Subparagraph 9.5.1.

9.4.2 The issuance of a Certificate for Payment will constitute a representation by the Consultant to the Owner, based on the Consultant's evaluation of the Work and the data comprising the Application for Payment, that the Work has progressed to the point indicated and that, to the best of the Consultant's knowledge, information and belief, the quality of the Work is in accordance with the Contract Documents. The foregoing representations are subject to an evaluation of the Work for conformance with the Contract Documents upon Substantial Completion, to results of subsequent tests and inspections, to correction of minor deviations from the Contract Documents prior to completion and to specific qualifications expressed by the Consultant. However, the issuance of a Certificate for Payment will not be a representation that the Consultant has (I) made exhaustive or continuous on-site inspections to check the quality or quantity of the Work, (2) reviewed construction means, methods, techniques, sequences or procedures, (3) reviewed copies of requisitions received from Subcontractors and material suppliers and other data requested by the Owner to substantiate the Contractor's right to payment, or (4) made examination to ascertain how or for what purpose the Contractor has used money previously paid on account of the Contract Sum.

9.5 DECISIONS TO WITHHOLD CERTIFICATION

9.5.1 The Owner or the Consultant may withhold a Certificate for Payment in whole or in part, to the extent reasonably necessary to protect the Owner, if, in the Owner's or Consultant's opinion the representations to the Owner required by Subparagraph 9.4.2 cannot be made. If the Consultant is unable to certify payment in the amount of the Application, the Consultant may notify the Contractor and Owner as provided in Subparagraph 9.4. I. If the Contractor and Consultant cannot agree on a revised amount, the Consultant may promptly issue a Certificate for Payment for the amount for which the Consultant is able to make such representations to the Owner. The Owner or Consultant may also withhold a Certificate for Payment or, because of subsequently discovered evidence, may nullify the whole or a part of a Certificate for Payment previously issued, to such extent as may be necessary in the Owner's or Consultant's opinion to protect the Owner from loss for which the Contractor is responsible, including loss resulting from acts and omissions described in Subparagraph 3.3.2, because of:

.1 defective Work not remedied;

.2 third party claims filed or reasonable evidence indicating probable filing of such claims unless security is acceptable to the Owner is provided by the Contractor;

.3 failure of the Contractor to make payments properly to Subcontractors or for labor, materials or equipment;

.4 reasonable evidence that the Work cannot be completed for the unpaid balance of the Contract Sum;

.5 damage to the Owner or another contractor;

.6 reasonable evidence that the Work will not be completed within the Contract Time, and that the unpaid balance would not be adequate to cover actual or liquidated damages for the anticipated delay; or

.7 Any other failure to comply with the Contract Documents or Contractor's failure to carry out the Work in accordance with the Contract Documents.

9.5.2 When the above reasons for withholding certification are removed, certification will be made for amounts previously withheld.

9.6 PROGRESS PAYMENTS

9.6.1 After the Consultant has received all the necessary documents and properly issued a Certificate for Payment, the Owner shall make payment in the manner and within the time provided in the Contract Documents and may so notify the Consultant.

9.6.2 If not done previously, The Contractor shall promptly pay each Subcontractor, upon receipt of payment from the Owner, out of the amount paid to the Contractor on account of such Subcontractor's portion of the Work, the amount to which said Subcontractor is entitled, reflecting percentages actually retained from payments to the Contractor on account of such Subcontractor's portion of the Work. The Contractor shall, by appropriate agreement with each Subcontractor, require each Subcontractor to make payments to Sub-subcontractors in a similar manner.

9.6.3 The Consultant or Owner may on request, furnish to any Subcontractors or any other person or entity, if practicable, information regarding percentages of completion or amounts applied for by the Contractor and action taken thereon by the Consultant and Owner on account of portions of the Work done by such Subcontractor.

9.6.4 Neither the Owner nor Consultant shall have an obligation to pay nor to see to the payment of money to a Subcontractor except as may otherwise be required by law.

9.6.5 Payment to material suppliers shall be treated in a manner similar to that provided for Subcontractors because by the definitions of this Agreement they are a Subcontractor.

9.6.6 A Certificate for Payment, a progress payment, or partial or entire use or occupancy of the Project by the Owner shall not constitute acceptance of Work not in accordance with the Contract Documents.

9.6.7 Payments received by the Contractor for Work properly performed by Subcontractors and suppliers shall be held by the Contractor for those Subcontractors or suppliers who performed Work or furnished materials, or both, under contract with the Contractor for which payment was made by the Owner. Nothing contained herein shall require money to be placed in a separate account and not commingled with money of the Contractor, shall create any fiduciary liability or tort liability on the part of the Contractor for breach of trust or shall entitle any person or entity to an award of punitive damages against the Contractor for breach of the requirements of this provision.

9.7 FAILURE OF PAYMENT

9.7.1 If the Consultant does not issue a Certificate for Payment, through no fault of the Contractor, within seven days after receipt of the Contractor's Application for Payment, or if the Owner does not pay the Contractor within seven days after the date established in the Contract Documents the amount certified by

the Consultant or awarded by arbitration, then the Contractor may, upon seven additional days' written notice to the Owner and Consultant, stop the Work until payment of the amount owing has been received. The Contract Time shall be extended appropriately, and the Contract Sum shall be increased by the amount of the Contractor's reasonable costs of shut-down, delay and start-up, plus interest as provided for in the Contract Documents.

9.8 SUBSTANTIAL COMPLETION

9.8.1 Substantial Completion is the stage in the progress of the Work, or portion thereof designated and approved by the Consultant and Owner, when (i) the Work or designated portion thereof is sufficiently complete in accordance with the Contract Documents so that the Owner can fully occupy and utilize the Work, or designated portion thereof, for its intended use and (ii) all other stated requirements or conditions to Substantial Completion in the Contract Documents have been satisfied. Substantial Completion shall also require, that all Work other than incidental corrective or punch list work and final cleaning shall have been completed, including but not limited to the following:

.1 Obtain temporary occupancy permits, pressure vessel permits, elevator permits, and similar approvals or certificates by governing authorities and franchised services, assuring the Owner's full access and use of completed Work.

.2 Submit the Contractor's punch list of items to be completed or corrected and written request for inspection.

.3 Complete final start-up, testing, and commence instruction and training sessions on all major building systems, including HVAC and controls, intercom, data communications, fire alarm, telephone, fire sprinkler, security and clocks.

.4 Make final changeover of locks and transmit new keys to the Owner, and advise the Owner of the changeover in security provisions.

.5 Discontinue or change over and remove temporary facilities and services from the project site.

.6 Advise the Owner on coordination of shifting insurance coverages, including proof of extended coverages as required.

Further, the Work is not Substantially Complete unless the Consultant reasonably judges that the Work can achieve Final completion within [30] days, appropriate cleaning has occurred, all systems and parts are commissioned and usable, including balancing of the HVAC system, utilities are connected and operating normally, all required temporary occupancy permits have been issued and the work is accessible by normal vehicular and pedestrian traffic routes. The fact that the owner may occupy the Work or a designated portion thereof does not indicate that the work is Substantially Complete or is acceptable in whole or in part, nor does such occupation toll or change any liquidated damages due the Owner.

9.8.2 Date of Commissioning of Critical Systems. Substantial Completion also shall require commissioning of Critical Systems. The following systems of the Work, and any other systems designated in the Contract Documents, are considered "Critical Systems": the HVAC system, the data communication system(s), the intercom system, the life safety system(s) and the security system. When the Contractor considers that the Critical Systems are up and running and ready for normal operation as specified for each phase, the Contractor shall so notify the Consultant in writing a minimum of 14 days prior to the Date of

Substantial Completion for that portion or phase as fixed in the contract Documents. The Consultant will then schedule a pre-commissioning inspection of these systems to determine whether the Critical Systems are complete and ready for normal operation. If the Consultant's inspection discloses that the Critical Systems are not Substantially Complete or that any item which is not in accordance with the requirements of the Contract Documents, the Contractor shall expeditiously, and before the Date of Commissioning, complete or correct such item upon notification by the Consultant. The Contractor shall then submit a request for another inspection by the Consultant to determine completion of the Critical Systems and pay the costs associated with the re-inspection, including fees of the Consultant and its consultants. When the Critical Systems are complete, the Consultant will notify the Owner in writing, which shall establish the Date of Commissioning. Warranties on the Critical Systems required by the Contract Documents shall commence on the Date of Commissioning, unless otherwise provided. Other than being a condition to Substantial Completion, the Date of Commissioning shall not have an effect on the duties of the parties at Substantial Completion.

9.8.3 Indemnification. The Contractor shall defend, indemnify, and hold harmless the Owner and the Consultant and their agents, employees, and consultants, successors and assigns from and against all claims, damages, losses and expenses of third parties, direct and indirect, or consequential, including costs, design professional fees, and attorneys' fees incurred by the owner related to such claims and in proving the right to indemnification, arising out of or resulting from the failure of the Contractor to attain the Date of Commissioning less than 30 days prior to the Date of Substantial Completion fixed by the Contract Documents. In particular, the Contractor acknowledges that a 30-day period after the Date of Commissioning and prior to occupancy is specified during which the HVAC system is scheduled to operate under a procedure intended to dissipate out-gassing that may occur from interior and other materials.

9.8.4 When the Contractor considers that the Work, or a portion thereof which the Owner agrees to accept separately, is substantially complete, the Contractor shall prepare and submit to the Consultant and Owner a comprehensive list of items to be completed or corrected prior to final payment. The Contractor shall proceed promptly to complete and correct all items on the list. Failure to include an item on such list does not alter the responsibility of the Contractor to complete all Work in accordance with the Contract Documents.

9.8.5 Upon receipt of the Contractor's list, the Consultant and the Owner will make an inspection to determine whether the Work or designated portion thereof is substantially complete. If the Consultant's inspection discloses any item, whether or not included on the Contractor's list, which is not sufficiently complete in accordance with the Contract Documents so that the Owner can occupy and utilize the Work or designated portion thereof for its intended use, the Contractor shall, before issuance of the Certificate of Substantial Completion, complete or correct such item upon notification by the Consultant or Owner. In such case, the Contractor shall then submit a request for another inspection by the Consultant to determine Substantial Completion. If the Owner or Consultant determines that the Work or designated portion is not substantially complete, then the contractor shall expeditiously complete the Work or designated portion, request another inspection and pay all costs associated with any re-inspection.

9.8.6 When the Work or designated portion thereof is substantially complete, the Consultant may prepare a Certificate of Substantial Completion which, upon approval of the Owner, may establish the date of Substantial Completion, shall establish responsibilities of the Owner and Contractor for security, maintenance, heat, utilities, damage to the Work and insurance, and shall fix the time within which the Contractor shall finish all items on the list accompanying the Certificate. Warranties required by the Contract Documents shall commence on the date of Substantial Completion of the Work or designated portion thereof unless otherwise provided in the Certificate of Substantial Completion. The Contractor shall attach and submit with the executed Certificate or Substantial Completion a written list of each outstanding and

unresolved Claim; any Claim not so submitted and identified, other than Retainage and the undisputed balance of the Contract Sum, shall be deemed waived and abandoned. If the Owner or Consultant determines that the Work or designated portion is not substantially complete, the Contractor shall expeditiously complete the Work or designated portion, again request an inspection, and pay the costs associated with the re-inspection, including Consultant and consultant fees.

9.8.7 The Certificate of Substantial Completion shall be submitted to the Owner and Contractor for their written acceptance of responsibilities assigned to them in such Certificate. Any items not included by the Consultant but required or necessary for Final Completion of the Contract shall be supplies and installed by the Contractor as a part of the Contract Sum, notwithstanding their not being recorded by the Consultant. Upon written acceptance of the Certificate of Substantial Completion and upon the Contractor's application, the Owner shall make payment as provided in the Contract Documents. Such payment shall be adjusted for Work that is incomplete or not in accordance with the requirements of the Contract Documents. No further payment will be due or owing until the payment at Final Completion.

9.8.8 The Contractor shall prepare, continue to monitor with the Consultant, and cause to be completed, all punch lists with respect to the activity of each Subcontractor and report weekly to the Owner on outstanding punch list items. Beginning 90 days before the scheduled date of Substantial Completion, the Contractor shall prepare reports weekly, identifying items to be competed in order to obtain temporary and permanent certificates of occupancy and make recommendations to the Owner with respect to effectuating the earliest possible completion.

9.9 PARTIAL OCCUPANCY OR USE

9.9.1 The Owner may occupy or use any completed or partially completed portion of the Work at any stage when such portion is designated by separate agreement with the Contractor, provided such occupancy or use is consented to by the insurer as required under Clause 11.3.1.5 and authorized by public authorities having jurisdiction over the Work. Such partial occupancy or use may commence whether or not the portion is substantially complete. The Owner and Contractor may agree in writing the responsibilities assigned to each of them for payments, Retainage, if any, security, maintenance, heat, utilities, damage to the Work and insurance, and may agree in writing concerning the period for correction of the Work and commencement of warranties required by the Contract Documents. When the Contractor considers a portion substantially complete, the Contractor shall prepare and submit a list to the Consultant and Owner as provided under Subparagraph 9.8.2. Contractor shall not unreasonably object to any partial occupancy or use. The stage of the progress of the Work shall be determined by written agreement between the Owner and Contractor or, if no agreement is reached, by decision of the Consultant.

9.9.2 Immediately prior to such partial occupancy or use, the Owner and Contractor shall, and Consultant may, jointly inspect the area to be occupied or portion of the Work to be used in order to determine and record the condition of the Work.

9.9.3 Unless otherwise agreed upon, partial occupancy or use of a portion or portions of the Work shall not constitute acceptance of Work not complying with the requirements of the Contract Documents or evidence Substantial Completion.

9.10 FINAL COMPLETION AND FINAL PAYMENT

9.10.1 FINAL COMPLETION

9.10.1.1 If, at thirty (30) days after the Date of Substantial Completion, the Owner considers that the punch

list items are unlikely to be completed within sixty (60) days of Substantial Completion, the Owner may, upon seven (7) days' written notice to the contractor, take over and perform some or all of the punch list items. If the Contractor fails to correct the deficiencies within the period required, the Owner may deduct the actual cost of performing this punch list work, including costs, plus 10% to account for the Owner's transaction costs from the Contract Sum.

9.10.1.2 Upon receipt of written notice from the Contractor that the Work is ready for final inspection and acceptance, the Consultant may promptly make such inspection accompanied by the Contractor and, when the Consultant finds all punch list items fully completed and the Work acceptable under the Contract Documents and the Contract fully performed, the Consultant may promptly notify the Contractor and the Owner in writing that to the best of the Consultant's knowledge, information and belief, and on the basis of the Consultant's on-site visits and inspections, the Work has been completed in accordance with terms and conditions of the Contract Documents. If the Consultant determines that some or all of the punch list items are not fully completed, then the Contractor shall be responsible to the Owner for all costs, including re-inspection fees, associated with any subsequent Consultant's inspection. The Consultant's final Certificate for Payment will constitute a further representation that conditions listed in Subparagraph 9.10.2 as precedent to the Contractor's being entitled to final payment have been fulfilled.

9.10.1.3 The Contractor is liable for, and the Owner may deduct from any amounts due the Contractor, all Consultant, architect, engineer or other design consultant fees incurred by the Owner for services performed more than 60 days after Substantial Completion of all the Work, whether or not those services would have been performed prior to that date had Final Completion been achieved in a timely manner.

9.10.1.4 When the Consultant finds that the Work has been concluded, a final occupancy permit has been issued, and the Contractor has submitted all the items in Subparagraph 9.10.2.1 to the Consultant, the Contractor may submit a final Application for Payment. The Consultant will then promptly issue a final Certificate for Payment stating that the entire balance found to be due the Contractor and noted in said final Certificate is due and payable. The Consultant's final Certificate for Payment shall establish the date of Final Completion upon its execution by the Owner.

9.10.1.5 "Final Completion" will be attained when the Contractor has accomplished the following:

.1 Complete all requirements listed in Paragraph 9.8 for Substantial Completion.

.2 Complete all remaining punch list items, notify Consultant and Owner that all work is complete.

.3 Obtain permanent occupancy permits.

.4 Submit final change order and final Application for Payment.

.5 Submit recorded documents, final property survey, and operation and maintenance manuals.

.6 Deliver tools, spare parts, extra stock of material and similar physical items to the Owner.

.7 Complete final cleaning.

.8 Complete instruction and train in sessions on all major building systems including HVAC, intercom data communications, fire alarm, telephone, fire sprinkler, security and clocks.

9.10.2 FINAL ACCEPTANCE AND PAYMENT

9.10.2.1 Final payment shall not become due until after the Owner's Board of Directors has formally accepted the Project "Final Acceptance". To achieve Final Acceptance, the Consultant must have issued a final Certificate of Payment under Subparagraph 9.10.1, Final Completion must have occurred, and the Contractor must have submitted to the Consultant the following:

.1 an affidavit that any and all payrolls, bills for materials and equipment, and other indebtedness connected with the Work for which the Owner or the Owner's property might be responsible or encumbered (less amounts withheld by Owner) have been paid or otherwise satisfied together with full and final unconditional waivers by the Contractor and all Subcontractors in a form and with content acceptable to the Owner, except for any Subcontractor claims that are specifically identified on the affidavit,

.2 a certificate evidencing that insurance required by the Contract Documents to remain in force after final payment is currently in effect and will not be canceled or allowed to expire until at least 30 days' prior written notice has been given to the Owner,

.3 a written statement that the Contractor knows of no substantial reason that the insurance will not be renewable to cover the period required by the Contract Documents,

.4 consent of surety, if any, to final payment,

.5 other data establishing payment or satisfaction of or protection against obligations, such as receipts, releases and waivers of liens, claims, security interests or encumbrances arising out of the Contract, to the extent and in such form as may be designated by the Owner. If a Subcontractor refuses to furnish a release or waiver required by the Owner, the Contractor shall furnish a bond satisfactory to the Owner to indemnify the Owner against such lien or cash deposit off such lien or claim whichever the Owner may request. Such cash deposit shall be paid with the Contractor's own funds. If such lien remains unsatisfied after payments are made, the Contractor shall refund to the Owner all money that the Owner may be compelled to pay in discharging such lien, including all costs and reasonable attorneys' fees,

.6 an “Affidavit of Wages” from the Contractor and each Subcontractor of every tier certified by all required governmental authorities.

.7 a letter from the Consultant indicating that the Work is complete and recommending Final Acceptance of the Project by the Owner.

.8 certification that all materials in the Work are "lead-free" and "asbestos-free," and

.9 all warranties, guarantees, training manuals, operation instructions, certificates, spare parts, maintenance stock, specified excess material, as-built drawings and other documents or items required by the Contract Documents or local governmental entities.

9.10.3 If, after Substantial Completion of the Work, final completion thereof is materially delayed through no fault of the Contractor, and the Consultant so confirms, the Owner shall, upon application by the Contractor and certification by the Consultant, and without terminating the Contract, make payment of the balance due for that portion of the Work fully completed and accepted to the extent permitted by statute. If the remaining balance for Work not fully completed or corrected is less than Retainage stipulated in the Contract Documents, and if bonds have been furnished, the written consent of surety to payment of the

balance due for that portion of the Work fully completed and accepted shall be submitted by the Contractor to the Consultant prior to certification of such payment. Such payment shall be made under terms and conditions governing final payment, except that it shall not constitute a waiver of claims.

9.10.4 If a Subcontractor of any tier or supplier refuses to furnish a release or waiver required by the Owner the Owner may (a) retain in the fund, account, or escrow funds in such amount as to defray the cost of foreclosing the liens of such claims and to pay attorneys' fees, the total of which shall be no less than 150% of the claimed amount, or (b) accept a bond from the Contractor, satisfactory to the owner, to indemnify the Owner against such lien. If any such lien remains unsatisfied after all payments from the Retainage are made, the Contractor shall refund to the Owner all moneys that the Owner may be compelled to pay in discharging such lien, including all costs and reasonable attorneys' fees.

9.10.5 Release of Retainage. Retainage will be held and applied by the Owner as required by law. Release of Retainage will be processed in the ordinary course of business upon expiration of sixty (60) days following Final Acceptance of the Work by the Owner provided that no notice of lien shall have been given as provided by law, and that no claims have been brought to the attention of the Owner and that the Owner has no claims under this Contract.

9.10.6 WAIVER OF CLAIMS

9.10.6.1 Final Payment by Owner. The making of final payment shall not constitute a waiver of any Claims by the Owner.

9.10.6.2 Final Payment to Contractor. Acceptance of final payment by the Contractor, or any Subcontractors including but not limited to any material supplier shall constitute a waiver of claims by that payee except those previously timely made in writing delivered to the Owner, Consultant and identified by that payee as unsettled and attached to Contractor's final Application for Payment.

9.10.6.3 Change Orders. The execution of a Change Order shall constitute a waiver of Claims by the Contractor arising out of the Work to be performed or deleted pursuant to the Change Order, except as specifically described in the Change Order. Reservations of rights will be deemed waived and are void unless the reserved rights are specifically described in detail to the satisfaction of the Owner and are initialed by the Owner.

9.10.7 The Contractor shall maintain books, ledgers, records, documents, estimates, correspondence, logs, electronic data and other evidence pertaining to the costs incurred by the Contractor in connection with or related to the Contract ("records") to such extent and in such detail as will property reflect and fully support compliance with requirements of the Contract Documents and with all costs, charges and other amounts of whatever nature under the contract. The Contractor shall preserve such records for a period of three (3) years following the date of Final Acceptance under the contract and for such longer period as may be required by any other provision of the contract. Within seven (7) days of the Owner's requires, the Contractor agrees to make available at the office of the Contractor during normal business hours all records for inspection, audit and reproduction by the Owner or its representatives. These requirements shall be applicable to each Subcontractor of any tier and included in each Subcontract and purchase order issued with respect to the Work, except fixed-price Subcontracts where the price is $25,000 or less.

ARTICLE 10 PROTECTION OF PERSONS AND PROPERTY

10.1 SAFETY PRECAUTIONS AND PROGRAMS

10.1.1 The Contractor shall use best efforts and shall be responsible for initiating, maintaining and supervising all safety precautions and programs in connection with the performance of the Contract.

10.2 SAFETY OF PERSONS AND PROPERTY

10.2.1 The Contractor shall use best efforts to take precautions for safety of, and provide protection to prevent damage, injury or loss to:

.1 employees on the Work and other persons who may be affected thereby;

.2 the Work and materials and equipment to be incorporated therein, whether in storage on or off the site, under care, custody or control of the Contractor or the Contractor's Subcontractors or Sub-subcontractors; and

.3 other property at the site or adjacent thereto, such as trees, shrubs, lawns, walks, pavements, roadways, structures and utilities not designated for removal, relocation or replacement in the course of construction.

10.2.2 The Contractor shall give notices and comply with applicable laws, ordinances, rules, regulations and lawful orders of public authorities bearing on safety of persons or property or their protection from damage, injury or loss.

10.2.3 The Contractor shall use best efforts to erect and maintain, as required by existing conditions and performance of the Contract, safeguards for safety and protection, including posting danger signs and other warnings against hazards, promulgating safety regulations and notifying owners and users of adjacent sites and utilities and to protect adjacent property and improvements from any damage. Any damage to such property or improvements shall be promptly remedied at Contractor’s sole cost and expense.

10.2.4 When use or storage of explosives or other hazardous materials or equipment or unusual methods are necessary for execution of the Work, the Contractor shall exercise utmost care and carry on such activities under supervision of properly qualified personnel and notify the Owner and Consultant in advance to such storage. To the extent that Owner's Operations limit the use or storage of explosives or other hazardous materials or equipment they shall not be used or stored at the Project.

10.2.5 The Contractor shall promptly remedy damage and loss (other than damage or loss insured under property insurance required by the Contract Documents) to property referred to in Clauses 10.2.1.2 and 10.2.1.3 caused in whole or in part by the Contractor, any Subcontractors, a Sub-subcontractor, or anyone directly or indirectly employed by any of them, or by anyone for whose acts they may be liable and for which the Contractor is responsible under Clauses 10.2.1.2 and 10.2.1.3, except damage or loss attributable to acts or omissions of the Owner or Consultant or anyone directly or indirectly employed by either of them, or by anyone for whose acts either of them may be liable, and not attributable to the fault or negligence of the Contractor. The foregoing obligations of the Contractor are in addition to the Contractor's obligations under Paragraph 3.18.

10.2.6 The Contractor shall designate a responsible member of the Contractor's organization at the site whose duty shall be the prevention of accidents. This person shall be the Contractor's superintendent unless otherwise designated by the Contractor in writing to the Owner and Consultant.

10.2.7 The Contractor shall not load or permit any part of the construction or site to be loaded so as to endanger its safety.

10.2.8 Contractor shall specifically comply with any and all laws, rules and regulations related to hazardous materials (including without limitation asbestos) and hazardous material abatement including by not limited to those relating to contracting and the performance of such work.

10.3 HAZARDOUS MATERIALS

10.3.1 If reasonable precautions will be inadequate to prevent foreseeable bodily injury or death to persons resulting from a material or substance, including but not limited to asbestos, encountered on the site by the Contractor, the Contractor shall, upon recognizing the condition, immediately stop Work in the affected area and promptly report the condition to the Owner and Consultant in writing. By executing this Contract, Contractor represents and warrants that it has no knowledge of any material or substance which would give rise to any obligation of the Owner under any provision of 10.3.

10.3.2 The Owner shall obtain the services of a licensed laboratory to verify the presence or absence of the material or substance reported by the Contractor and, in the event such material or substance is found to be present, to verify that it has been rendered harmless. Unless otherwise required by the Contract Documents, the Owner shall furnish in writing to the Contractor and Consultant the names and qualifications of persons or entities who are to perform tests verifying the presence or absence of such material or substance or who are to perform the task of removal or safe containment of such material or substance. The Contractor and the Consultant will promptly reply to the Owner in writing stating whether or not either has reasonable objection to the persons or entities proposed by the Owner. If either the Contractor or Consultant has an objection to a person or entity proposed by the Owner, the Owner shall propose another to whom the Contractor and the Consultant have no reasonable objection. When the material or substance has been rendered harmless, Work in the affected area shall resume upon written agreement of the Owner and Contractor. The Contract Time shall be extended appropriately, and the Contract Sum shall be increased in the amount of the Contractor's reasonable additional costs of shut-down, delay and start-up, which adjustments shall be accomplished as provided in Article 7.

10.4 The Owner shall not be responsible under Paragraph 10.3 for materials and substances brought to the site by the Contractor.

10.5 EMERGENCIES

10.5.1 In an emergency affecting safety of persons or property, the Contractor shall act, at the Contractors discretion, to prevent threatened damage, injury or loss. Additional compensation or extension of time claimed by the Contractor on account of an emergency shall be determined as provided in Paragraph 15.1.

ARTICLE 11 INSURANCE AND BONDS

11.1 CONTRACTOR'S LIABILITY INSURANCE

11.1.1 The Contractor shall purchase from and maintain in a company or companies lawfully authorized to do business in the jurisdiction in which the Project is located such insurance as will protect the Contractor from claims set forth below which may arise out of or result from the Contractor's operations under the Contract and for which the Contractor may be legally liable, whether such operations be by the Contractor or by any Subcontractors, or by anyone directly or indirectly employed by any of them, or by anyone for whose acts any of them may be liable:

.1 claims under workers' compensation, disability benefit and other similar employee benefit acts which are applicable to the Work to be performed;

.2 claims for damages because of bodily injury, occupational sickness or disease, or death of the Contractor's employees;

.3 claims for damages because of bodily injury, sickness or disease, or death of any person other than the Contractor's employees;

.4 claims for damages insured by usual personal injury liability coverage;

.5 claims for damages, other than to the Work itself, because of injury to or destruction of tangible property, including loss of use resulting therefrom;

.6 claims for damages because of bodily injury, death of a person or property damage arising out of ownership, maintenance or use of a motor vehicle;

.7 claims for bodily injury or property damage arising out of completed operations; and

.8 claims involving contractual liability insurance applicable to the Contractor's obligations under Paragraph 3.18.

11.1.2 The insurance required by Subparagraph 11.1.1 shall be written for not less than limits of liability specified in the Contract Documents or required by law, whichever coverage is greater. Coverage's, whether written on an occurrence or claims-made basis, shall be maintained without interruption from date of commencement of the Work until date of final payment and termination of any coverage required to be maintained after final payment.

11.1.3 Certificates of insurance acceptable to the Owner shall be filed with the Owner prior to commencement of the Work. These certificates and the insurance policies required by this Paragraph 11.1 shall contain a provision that coverages afforded under the policies will not be canceled or allowed to expire until at least 30 days' prior written notice has been given to the Owner. If any of the foregoing insurance coverages are required to remain in force after final payment and are reasonably available, an additional certificate evidencing continuation of such coverage shall be submitted with the final Application for Payment as required by Subparagraph 9.10.2. Information concerning reduction of coverage on account of revised limits or claims paid under the General Aggregate, or both, shall be furnished by the Contractor with reasonable promptness in accordance with the Contractor's information and belief.

11.2 PROJECT MANAGEMENT PROTECTIVE LIABILITY INSURANCE

11.2.1 The Owner may also in addition to or in the alternative require the Contractor to purchase and maintain Project Management Protective Liability insurance from the Contractor's usual sources as primary coverage for the Owner's, Contractor's and Consultant's vicarious liability for construction operations under the Contract. Unless otherwise required by the Contract Documents, the Owner shall reimburse the Contractor by increasing the Contract Sum to pay the cost of purchasing and maintaining such optional insurance coverage and the Contractor shall not be responsible for purchasing any other liability insurance on behalf of the Owner. The minimum limits of liability purchased with such coverage shall be equal to the aggregate of the limits required for Contractor's Liability Insurance under Clauses 11.1.1.2 through 11.1.1.5.

11.2.2 To the extent damages are covered by Project Management Protective Liability insurance, the Owner, Contractor and Consultant waive all rights against each other for damages, except such rights as they may have to the proceeds of such insurance. The policy shall provide for such waivers of subrogation by endorsement or otherwise.

11.2.3 The Owner may require the Contractor to include the Owner, Owners Representative, Consultant or any other persons or entities as additional insureds on the Contractor's Liability Insurance coverage under Paragraph 11.1 or as set out elsewhere in the Contract Documents.

11.3 PROPERTY INSURANCE

11.3.1 Unless otherwise provided, the Owner shall purchase and maintain, in a company or companies lawfully authorized to do business in the jurisdiction in which the Project is located, property insurance written on a builder's risk "all-risk" or equivalent policy form in the amount of the initial Contract Sum, plus value of subsequent Contract modifications and cost of materials supplied or installed by others, comprising total value for the entire Project at the site on a replacement cost basis without optional deductibles. Such property insurance shall be maintained, until final payment has been made as provided in Paragraph 9.10 or until no person or entity other than the Owner has an insurable interest in the property required by this Paragraph 11.3 to be covered, whichever is later. This insurance shall include interests of the Owner, the Contractor, Subcontractors and Sub-subcontractors in the Project.

11.3.1.1 Property insurance shall include, to the extent the Owner so elects, insurance against the perils of fire (with extended coverage) and physical loss or damage including, without duplication of coverage, theft, vandalism, malicious mischief, collapse, earthquake, flood, windstorm, false work, testing and startup, temporary buildings and debris removal including demolition occasioned by enforcement of any applicable legal requirements, and may cover reasonable compensation for Consultant's and Contractor's services and expenses required as a result of such insured loss.

11.3.1.2 If the Owner does not intend to purchase such insurance the Owner shall so inform the Contractor. The Contractor may, then following 14 days prior written notice to the Owner by the Contractor effect such insurance which will protect the interests of the Owner, Contractor, Subcontractors and Sub-subcontractors in the Work, and if approved by the Owner in its discretion and in writing before the purchase thereof the costs thereof may be charged to the Owner.

11.3.1.3 If the property insurance requires deductibles, the Owner need not pay costs not covered because of such deductibles and they shall be paid by Contractor.

11.3.1.4 This property insurance, if any may at the Owner's option cover portions of the Work stored off the site, and also portions of the Work in transit.

11.3.1.5 Partial occupancy or use in accordance with Paragraph 9.9 may commence absent the insurance company or companies providing property insurance having consented to such partial occupancy or use by endorsement or otherwise.

11.3.2 Loss of Use Insurance. The Owner, at the Owner's option, may purchase and maintain such insurance as will insure the Owner against loss of use of the Owner's property due to fire or other hazards, however caused.

11.3.3 If during the Project construction period the Owner insures properties, real or personal or both, at or adjacent to the site by property insurance under policies separate from those insuring the Project, or if after final payment property insurance is to be provided on the completed Project through a policy or policies other than those insuring the Project during the construction period, the Owner shall waive all rights in accordance with the terms of Subparagraph 11.3.5 for damages caused by fire or other causes of loss covered by this separate property insurance, to the extent of actual recovery from such policies. All separate policies shall provide this waiver of subrogation by endorsement or otherwise.

11.3.4 Before an exposure to loss may occur, the Owner shall file with the Contractor a copy of each policy that includes insurance coverage's required by this Paragraph 11.3. Each policy shall contain all generally applicable conditions, definitions, exclusions and endorsements related to this Project.

11.3.5 Waivers of Subrogation. The Owner and Contractor waive all rights against (1) each other and any of their subcontractors, sub-subcontractors, agents and employees, each of the other, and (2) the Consultant, Consultant's consultants, separate contractors described in Article 6, if any, and any of their subcontractors, sub-subcontractors, agents and employees, for damages caused by fire or other causes of loss to the extent covered by property insurance obtained pursuant to this Paragraph 11.3 or other property insurance applicable to the Work, except such rights as they have to proceeds of such insurance held by the Owner as fiduciary. The Owner or Contractor, as appropriate, shall require of the Consultant, Consultant's consultants, separate contractors described in Article 6, if any, and the subcontractors, sub-subcontractors, agents and employees of any of them, by appropriate agreements, written where legally required for validity, similar waivers each in favor of other parties enumerated herein. The policies shall provide such waivers of subrogation by endorsement or otherwise. A waiver of subrogation shall be effective as to a person or entity even though that person or entity would otherwise have a duty of indemnification, contractual or otherwise, did not pay the insurance premium directly or indirectly, and whether or not the person or entity had an insurable interest in the property damaged.

11.3.6 A loss insured under Owner's property insurance shall be adjusted by the Owner and made payable to the Owner for the insureds, as their interests may appear, subject to requirements of any applicable mortgagee clause and of Subparagraph 11.3.7. The Contractor shall pay Subcontractors their just shares of insurance proceeds received by the Contractor, and by appropriate agreements, written where legally required for validity, shall require Subcontractors to make payments to their Sub-subcontractors in similar manner.

11.3.7 The Owner shall have power to adjust and settle a loss with insurers unless one of the parties in interest shall object in writing within five days after occurrence of loss to the Owner's exercise of this power; if such objection is made, the dispute shall be resolved as provided in Paragraphs 15.3, 15.4, and 15.5. The Owner shall, in the case of arbitration, make settlement with insurers in accordance with directions of the arbitrators. If distribution of insurance proceeds by arbitration is required, the arbitrators will direct such distribution.

11.4 PERFORMANCE BOND AND PAYMENT BOND

11.4.1 Unless exempted, the Contractor shall furnish bonds covering faithful performance of the Contract and payment of obligations arising thereunder as stipulated in bidding requirements or specifically required in any of the Contract Documents.

11.4.2 Upon the request of any person or entity appearing to be a potential beneficiary of bonds covering payment of obligations arising under the Contract, the Contractor shall promptly furnish a copy of the bonds or shall permit a copy to be made.

ARTICLE 12 UNCOVERING AND CORRECTION OF WORK

12.1 UNCOVERING OF WORK

12.1.1 If a portion of the Work is covered contrary to the Consultant's or Owner's request or to requirements specifically expressed in the Contract Documents, it must, if required in writing by the Consultant or Owner, be uncovered for the Consultant's or Owner's observation or examination and be replaced at the

Contractor's expense without change in the Contract Time.

12.1.2 If a portion of the Work has been covered which the Consultant or Owner has not specifically requested to examine prior to its being covered, the Consultant or Owner may request to see such Work and it shall be uncovered by the Contractor. If such Work is in full and strict accordance with the Contract Documents, costs of uncovering and replacement shall, by appropriate Change Order, be at the Owner's expense. If such Work is not in full and strict accordance with the Contract Documents, correction shall be at the Contractor's sole expense unless the condition was caused by the Owner or a separate contractor in which event the Owner shall be responsible for payment of such costs.

12.2 CORRECTION OF WORK

12.2.1 BEFORE OR AFTER SUBSTANTIAL COMPLETION

12.2.1.1 The Contractor shall promptly correct Work rejected by the Consultant or failing to conform to the requirements of the Contract Documents, whether discovered before or after Substantial Completion and whether or not fabricated, installed or completed. Costs of correcting such rejected Work, including additional testing and inspections and compensation for the Consultant's services and expenses made necessary thereby, shall be at the Contractor's expense. If prior to Substantial Completion the contractor or any Subcontractors or anyone they are responsible for uses or damages any portion of the Work, they shall return it to “like new” condition without any increase in the Contract Time or Sum.

12.2.2 AFTER SUBSTANTIAL COMPLETION

12.2.2.1 In addition to the Contractor's obligations under Paragraph 3.5, if, within one year after the date of Substantial Completion of the Work or designated portion thereof or after the date for commencement of warranties established under Subparagraph 9.9.1, or by terms of an applicable special warranty required by the Contract Documents, any of the Work is found to be not in accordance with the requirements of the Contract Documents, the Contractor shall correct it promptly (but in no event later than seven days) after receipt of written notice from the Owner to do so unless the Owner has previously given the Contractor a full and final written acceptance of such condition. The Owner shall give such notice promptly after discovery of the condition. During the one-year period for correction of Work, if the Owner fails to notify the Contractor and give the Contractor an opportunity to make the correction, the Owner waives the rights to require correction by the Contractor and to make a claim for breach of warranty. If the Contractor fails to correct nonconforming Work promptly during that period after receipt of notice from the Owner or Consultant, the Owner may correct it in accordance with Paragraph 2.4.

12.2.2.2 The one-year period for correction of Work shall be extended with respect to portions of Work first performed after Substantial Completion by the period of time between Substantial Completion and the actual performance of the Work.

12.2.2.3 The one-year period for correction of Work shall be extended by corrective Work performed by the Contractor pursuant to this Paragraph 12.2.

12.2.3 The Contractor shall remove from the site portions of the Work which are not in accordance with the requirements of the Contract Documents and are neither corrected by the Contractor nor accepted by the Owner.

12.2.4 The Contractor shall bear the sole cost of correcting destroyed or damaged construction, whether completed or partially completed, of the Owner or separate contractors caused by the Contractor's

correction or removal of Work which is not in accordance with the requirements of the Contract Documents.

12.2.5 Nothing contained in this Paragraph 12.2 shall be construed to establish a period of limitation with respect to other obligations which the Contractor might have under the Contract Documents. Establishment of the one-year period for correction of Work as described in Subparagraph 12.2.2 relates only to the specific obligation of the Contractor to correct the Work, and has no relationship to the time within which the obligation to comply with the Contract Documents may be sought to be enforced, nor to the time within which proceedings may be commenced to establish the Contractor's liability with respect to the Contractor's obligations other than specifically to correct the Work.

12.3 ACCEPTANCE OF NONCONFORMING WORK

12.3.1 If the Owner prefers to accept Work which is not in accordance with the requirements of the Contract Documents, the Owner may do so instead of requiring its removal and correction, in which case the Contract Sum will be reduced as appropriate and equitable. Such adjustment shall be effected whether or not final payment has been made.

ARTICLE 13 MISCELLANEOUS PROVISIONS

13.1 GOVERNING LAW

13.1.1 The Contract shall be governed by the law of the State of Oregon.

13.2 SUCCESSORS AND ASSIGNS

13.2.1 The Owner and Contractor respectively bind themselves, their partners, successors, assigns and legal representatives to the other party hereto and to partners, successors, assigns and legal representatives of such other party in respect to covenants, agreements and obligations contained in the Contract Documents.

13.2.2 The Owner may, without consent of the Contractor, assign the Contract to any person or entity. In such event, they shall assume the Owner's rights and obligations under the Contract Documents. The Contractor shall execute all consents reasonably required to facilitate such assignment.

13.3 WRITTEN NOTICE

13.3.1 Written notice shall be deemed to have been duly served if delivered in person to the individual or a member of the firm or entity or to an officer of the corporation for which it was intended, or if delivered at or sent by registered or certified mail to the last business address known to the party giving notice. Notice by e-mail or facsimile shall not constitute written notice unless the Owner shall otherwise agree.

13.4 RIGHTS AND REMEDIES

13.4.1 Duties and obligations imposed by the Contract Documents and rights and remedies available thereunder shall be in addition to and not a limitation of duties, obligations, rights and remedies otherwise imposed or available by law.

13.4.2 No action or failure to act by the Owner, Consultant or Contractor shall constitute a waiver of a right or duty afforded them under the Contract, nor shall such action or failure to act constitute approval of or acquiescence in a breach thereunder, except as may be specifically agreed in writing.

13.5 TESTS AND INSPECTIONS

13.5.1 Tests, inspections and approvals of portions of the Work required by the Contract Documents or by laws, ordinances, rules, regulations or orders of public authorities having jurisdiction shall be made at an appropriate time. Unless otherwise provided, the Contractor shall timely make all arrangements for such tests, inspections and approvals with an independent testing laboratory or entity acceptable to the Owner, or with the appropriate public authority, and shall bear all related costs of tests, inspections and approvals. Except as otherwise provided herein, the cost of private-independent tests by third-parties to this Agreement shall be at Owner's expense. The Contractor shall give the Consultant and Owner timely notice of when and where tests and inspections are to be made so that the Consultant and Owner may be present for such procedures. The Owner shall bear costs of tests, inspections or approvals which do not become requirements until after bids are received or negotiations concluded.

13.5.2 If the Consultant, Owner or public authorities having jurisdiction determine that portions of the Work require additional testing, inspection or approval not included under Subparagraph 13.5.1, the Consultant may, upon written authorization from the Owner, instruct the Contractor to make arrangements for such additional testing, inspection or approval by an entity acceptable to the Owner, and the Contractor shall give timely notice to the Consultant and Owner of when and where tests and inspections are to be made so that the Consultant and Owner may be present for such procedures. Such costs, except as provided in Subparagraph 13.5.3, or otherwise in the Contract Documents shall be at the Owner's expense.

13.5.3 If such procedures for testing, inspection or approval under Subparagraphs 13.5.1 and 13.5.2 reveal failure of the portions of the Work to comply with requirements established by the Contract Documents, all costs made necessary by such failure including those of repeated procedures and compensation for the Consultant's and Owner's services and expenses shall be at the Contractor's sole cost and expense.

13.5.4 Required certificates of testing, inspection or approval shall, unless otherwise required by the Contract Documents, be secured by the Contractor and promptly delivered to the Consultant.

13.5.5 If the Consultant is to observe tests, inspections or approvals required by the Contract Documents, the Consultant will do so reasonably and, where practicable, at the normal place of testing.

13.5.6 Tests or inspections conducted pursuant to the Contract Documents shall be made promptly to avoid unreasonable delay in the Work.

13.6 INTEREST

13.6.1 Payments due and unpaid under the Contract Documents shall bear interest to the extent provided in the Oregon Prompt Payment Act.

13.7 COMMENCEMENT OF STATUTORY LIMITATION PERIOD

13.7.1 As between the Owner and Contractor any applicable statute of limitations shall accrue as provided by law.

ARTICLE 14 TERMINATION OR SUSPENSION OF THE CONTRACT

14.1 TERMINATION BY THE CONTRACTOR

14.1.1 The Contractor may terminate the Contract if the Work is stopped for a period of 30 consecutive

days through no act or fault of the Contractor or any Subcontractors, Sub-subcontractor or their agents or employees or any other persons or entities performing portions of the Work under direct or indirect contract with the Contractor, for any of the following reasons:

.1 issuance of an order of a court or other public authority having jurisdiction which requires all Work to be stopped:

.2 an act of government, such as a declaration of national emergency which requires all Work to be stopped; or

.3 because the Consultant has not issued a Certificate for Payment and has not notified the Contractor of the reason for withholding certification as provided in Subparagraph 9.4.1, or because the Owner has not made payment on a Certificate for Payment within the time stated in the Contract Documents following 30 prior written notice to the Owner.

14.1.2 If one of the reasons described in Subparagraph 14.1.1 exists, the Contractor may, upon seven days' written notice to the Owner and Consultant, terminate the Contract and recover from the Owner payment for Work executed and for proven loss with respect to materials, equipment, tools, and construction equipment and machinery, including agreed reasonable overhead and profit. Contractor shall not slow or stop the Work, or terminate the Contract, in the event of withholding of payment, so long as undisputed payments are made when due.

14.2 TERMINATION BY THE OWNER FOR CAUSE

14.2.1 The Owner may terminate the Contract if the Contractor:

.1 refuses or fails to supply enough properly skilled workers or proper materials;

.2 fails to make payment to Subcontractors for materials or labor in accordance with the respective agreements between the Contractor and the Subcontractors;

.3 disregards laws, ordinances, or rules, regulations or orders of a public authority having jurisdiction; or

.4 otherwise is guilty of substantial breach of a provision of the Contract Documents.

14.2.2 When any of the above reasons exist, the Owner may without prejudice to any other rights or remedies of the Owner and after giving the Contractor and the Contractor's surety, if any, seven days' written notice, terminate employment of the Contractor and may, subject to any prior rights of the surety:

.1 take possession of the site and of all materials, equipment, tools, and construction equipment and machinery thereon owned by the Contractor (but not the construction equipment owned, operated and used by Subcontractors in the performance of their Work);

.2 accept assignment of subcontracts pursuant to Paragraph 5.4; and

.3 finish the Work by whatever reasonable method the Owner may deem expedient. Upon request of the Contractor, the Owner shall furnish to the Contractor a detailed accounting of the costs incurred by the Owner in finishing the Work.

14.2.3 When the Owner terminates the Contract for one of the reasons stated in Subparagraph 14.2.1, the Contractor shall not be entitled to receive further payment until the Work is finished.

14.2.4 If the unpaid balance of the Contract Sum exceeds costs of finishing the Work, including compensation for the Consultant's services and expenses made necessary thereby, and other damages incurred by the Owner and not expressly waived, such excess shall not be paid to the Contractor. If such costs and damages exceed the unpaid balance, the Contractor shall pay the difference to the Owner. The amount to be paid shall be certified by the Consultant, upon application, and this obligation for payment shall survive termination of the Contract. Contractor hereby fully, finally and unconditionally waives any and all other claims, including but not limited to those for lost or anticipated profits or overhead.

14.3 SUSPENSION BY THE OWNER FOR CONVENIENCE

14.3.1 The Owner may, without cause, order the Contractor in writing to suspend, delay or interrupt the Work in whole or in part for such period of time as the Owner may determine.

14.3.2 The Contract Sum and Contract Time shall be adjusted for increases in the cost and time caused by suspension, delay or interruption as described in Subparagraph 14.3.1. Adjustment of the Contract Sum shall include profit. No adjustment shall be made to the extent:

.1 that performance is, was or would have been so suspended, delayed or interrupted by another cause for which the Contractor is responsible; or

.2 that an equitable adjustment is made or denied under another provision of the Contract.

14.4 TERMINATION BY THE OWNER FOR CONVENIENCE

14.4.1 The Owner may, at any time, terminate the Contract for the Owner's convenience and without cause. In the event the Owner terminates for cause, the Owner may, at any time by notice to the Contractor, convert such termination to termination for convenience.

14.4.2 Upon receipt of written notice from the Owner of such termination for the Owner's convenience, the Contractor shall:

.1 cease operations as directed by the Owner in the notice;

.2 take actions necessary, or that the Owner may direct, for the protection and preservation of the Work; and

.3 except for Work directed to be performed prior to the effective date of termination stated in the notice, terminate all existing subcontracts and purchase orders and enter into no further subcontracts and purchase orders.

14.4.3 In case of such termination for the Owner's convenience, the Contractor shall be entitled to receive payment for Work executed, and costs incurred by reason of such termination as provided in 14.4.4.

14.4.4. Upon on such termination Contractor shall recover as its sole remedy payment for Work properly and timely performed and installed prior to the effective date of the termination and for items properly and timely fabricated off the site and delivered and stored in accordance with the Owner’s instructions prior to the effective date of termination. Contractor hereby fully, finally and unconditionally waives any and all

other claims, including but not limited to those for lost or anticipated profits, or overhead. Owner shall be credited for payments previously made and claims the Owner has.

ARTICLE 15 CLAIMS AND DISPUTES

15.1 Claims

15.1.1 Definition. A Claim is a demand or assertion by one of the parties seeking, as a matter of right, adjustment or interpretation of Contract terms, payment of money, and extension of time or other relief with respect to the terms of the Contract. The term "Claim" also includes other disputes and matters in question between the Owner and Contractor arising out of or relating to the Contract. Claims must be initiated by written notice. The responsibility to substantiate Claims shall rest with the party making the Claim.

15.1.2 Time Limits on Claims. Claims by Contractor must be initiated within 21 days after occurrence of the event giving rise to such Claim or within 21 days after the claimant first recognizes the condition giving rise to the Claim, whichever is later. Contractor Claims not timely submitted shall be barred and considered waived. Claims must be initiated by written notice to the Consultant and the other party.

15.1.3 Continuing Contract Performance. Pending final resolution of a Claim except as otherwise agreed in writing or as provided in Subparagraph 9.7.1 and Article 14, the Contractor shall proceed diligently with performance of the Contract and the Owner shall continue to make payments in accordance with the Contract Documents.

15.1.4 Claims for Concealed or Unknown Conditions. Except as otherwise provided herein, if conditions are encountered at the site which are (1) subsurface or otherwise concealed physical conditions which differ materially from those indicated in the Contract Documents or (2) unknown physical conditions of an unusual nature, which differ materially from those ordinarily found to exist and generally recognized as inherent in construction activities of the character provided for in the Contract Documents, the Contractor shall give written notice to the Owner and the Consultant promptly before conditions are disturbed and in no event later than seven (7) days after first observance of the conditions. The Consultant may promptly investigate such conditions and, if they differ materially and cause an increase or decrease in the Contractor's cost of, or time required for, performance of any part of the Work, will recommend an equitable adjustment in the Contract Sum or Contract Time, or both, consistent with the requirements of the Contract Documents. If the Consultant determines that the conditions at the site are not materially different from those indicated in the Contract Documents and that no change in the terms of the Contract is justified, the Consultant may so notify the Owner and Contractor in writing, stating the reasons. Any claim of the Contractor arising from the Consultant’s determination shall be made in accordance with the dispute resolution procedures set forth herein. No adjustment in the Contract Time or Sum shall be permitted, however, if connection with any concealed or unknown condition which does not materially differ from those disclosed or which should have reasonably been discovered by the Contractor’s prior visits, observations, tests or for which the Contractor assumed any responsibility to verify.

15.1.5 Claims for Additional Cost. If the Contractor wishes to make Claim for an increase in the Contract Sum, written notice as provided herein shall be given before proceeding to execute the Work, and a Contractor Claim must be made in accordance with this Section 15, or it will be deemed waived. Prior notice is not required for Claims relating to an emergency endangering life or property arising under Paragraph 10.6.

15.1.6 If the Contractor believes additional cost is involved for reasons, including, but not limited to:

.1 a written interpretation from the Consultant

.2 an order by the Owner to stop the Work where the Contractor was not at fault

.3 a written order for a minor change in the Work issued by the Consultant

.4 failure of payment by the Owner

.5 termination of the Contract by the Owner

.6 Owner's suspension or

.7 other reasonable grounds, Claim shall be filed in accordance with this Paragraph 15.1.

All Claims for additional costs shall include any and all costs, including, but not limited to, any and all direct and indirect costs thereof.

15.1.7 Claims for Additional Time

15.1.7.1 If the Contractor wishes to make Claim for an increase in the Contract Time, written notice as provided herein shall be given and a Claim shall be made as provided herein. The Contractor's Claim shall include an estimate of any cost and of probable effect of delay on progress of the Work. In the case of a continuing delay, only one Claim is necessary. If the delay was not caused by the Owner, the Contractor, a Subcontractor of any tier, or the Consultant, or anyone acting on behalf of any of them, the Contractor shall be entitled only to an increase in the Contract Time, in accordance with the Contract documents, but not a change in the Contract Sum. If the delay was caused by the Contractor, a Subcontractor of any tier, or anyone acting on behalf of any of them, the Contractor is not entitled to an increase in the Contract Time or in the Contract Sum.

15.1.7.2 If adverse weather conditions are the basis for a Claim for additional time, such Claim shall be documented by data substantiating that weather conditions were abnormal for the period of time, could not have been reasonably anticipated and had an adverse effect on the scheduled construction, and that the Work was on schedule (or was not behind schedule through the fault of the Contractor) at the time the adverse weather conditions occurred. Neither the Contract Time nor the Contract Sum will be adjusted for normal inclement weather. The Contractor shall be entitled to a change in the Contract Time only if the Contractor can substantiate to the reasonable satisfaction of the Owner and Consultant that there was materially greater than normal inclement weather considering the full term of the Contract Time and using a ten-year average of accumulated record mean values from climatological data compiled by the U.S. Department of Commerce National Oceanic and Atmospheric Administration for the locale of the Project, and that the alleged abnormal inclement weather actually extended the critical path of the Work. IF the total net accumulated number of calendar days lost due to inclement weather from commencement of the Work until Final Completion exceeds the total net accumulated to be expected for the same period from the aforesaid data, and the Owner grants the critical path.

15.1.8 Injury or Damage to Person or Property. If either party to the Contract suffers injury or damage to person or property because of an act or omission of the other party, or of others for whose acts such party is legally responsible, written notice of such injury or damage, whether or not insured, shall be given to the other party within a reasonable time not exceeding 21 days after discovery. The notice shall provide sufficient detail to enable the other party to investigate the matter.

15.1.9 If unit prices are stated in the Contract Documents or subsequently agreed upon, and if quantities originally contemplated are materially changed in a proposed Change Order or Construction Change Directive so that application of such unit prices to quantities of Work proposed will cause substantial inequity to the Owner or Contractor, the applicable unit prices shall be equitably adjusted.

15.1.10 Time is of the Essence. The parties agree that the Owner shall be entitled to recover liquidated damages at the rate stated in the Agreement, which shall commence on the first day following the expiration of the Contract Time and continuing until the date of Substantial completion.

15.2 RESOLUTION OF CLAIMS AND DISPUTES

15.2.1 In an effort to reduce the incidence and costs to all parties of extended disputes, all Claims, direct or indirect, arising out of, or relating to, the Contract Documents or the breach thereof, except claims which have been waived under the terms of the Contract Documents, shall be decided exclusively by the following alternative dispute resolution procedure unless the parties mutually agree in writing otherwise.

15.2.2 The Contractor shall submit a written notice of any Claim to the Owner and the Consultant within 14 days of the occurrence of the event giving rise to such Claim and shall include a clear description of the event leading to or causing the Claim. The Contractor shall submit a written Claim as providing herein within 30 days of the notice. Claims shall include a clear description of the Claim and any proposed change in the Contract Sum (showing all components and calculations) and/or Contract Time (showing cause of and analysis of the resultant delay in the critical path) of the Claim and shall provide data fully supporting the Claim. Failure to properly submit the notice of Claim shall constitute waiver of the Claim. The Claim shall be deemed to include all changes, direct and indirect, in cost and in time to which the Contractor (and Subcontractors of any tier) is entitled. Any claim of a Subcontractor of any tier may be brought only through, and after review by, the Contractor.

15.2.3 Upon receipt of a Claim against the Contractor or at any time thereafter, the Consultant or the Owner may, but is not obligated to, notify the surety, if any, of the nature and amount of the Claim. If the Claim relates to a possibility of a Contractor's default, the Consultant or the Owner may, but is not obligated to, notify the surety and request the surety's assistance in resolving the controversy.

15.2.4 If a claim relates to or is the subject of a mechanic's lien or construction lien, the party asserting such Claim may proceed in accordance with applicable law to comply with the lien notice or filing deadlines prior to resolution of the Claim by the Consultant, by mediation or by litigation.

15.2.5 Within 30 days of the Owner's receipt of the written Claim, the Contractor may require that an officer of the Contractor, a principal of the Consultant, and the Owner's Superintendent or designee (all with authority to settle) meet, confer, and attempt to resolve the Claim during the following 21 days. The Owner may continue the meeting to a time after it has assembled and reviewed data. If the Claim is not resolved, the Contractor may bring no claim against the Owner unless the Claim is first subject to nonbinding mediation as described in Paragraph 15.3. This requirement cannot be waived except by an explicit written waiver.

15.2.6 The Contractor agrees that the Owner may join the Contractor as a party to any litigation/arbitration involving the alleged fault of the Contractor or Subcontractor of any tier.

15.3 MEDIATION

15.3.1 Any Claim arising out of or relating to the Contract, except Claims relating to aesthetic effect and except those waived shall, at the sole election of the Owner, be subject to mediation as a condition precedent to the institution of legal or equitable proceedings by either party. This requirement cannot be waived except by an express written waiver.

15.3.2 If the Owner so elects, the parties shall endeavor to resolve their claims by mediation, which unless the parties mutually agree otherwise, shall be in accordance with the Mediation Rules of the American Arbitration Association or Arbitration Service of Portland (as selected by the Owner) currently in effect ("Arbitration Service"). Request for mediation shall be filed in writing with the other party to the Contract and with the American Service. Mediation shall proceed in advance of legal or equitable proceedings, which shall be stayed pending mediation unless stayed for a longer period by agreement of the parties or court order.

15.3.3 The parties to the mediation shall share the mediator's fee and any filing fees equally. The medication shall be held in the place where the Project is located, unless another location is mutually agreed upon. Agreements reached in mediation shall be enforceable as settlement agreements in any court having jurisdiction thereof.

15.3.4 An officer of the Contract and the Owner's Superintendent or designee must attend the mediation session with authority to settle the Claim. To the extent there are other parties in interest, such as the Consultant or Subcontractors, their representatives, also with the authority to settle the Claim, shall also attend the mediation session. Unless the Owner and the Contractor mutually agree in writing otherwise, all unresolved Claims shall be considered at a single mediation session which shall occur prior to Final Acceptance by the Owner.

15.4 Arbitration

15.4.1 The Contractor may bring no litigation on Claims unless such Claims have been properly raised and (at the Owner's election) considered in the procedures of Subparagraphs 15.2 and 15.3 above. All unresolved Claims of the Contractor that are timely submitted shall be waived and released unless the Contractor has complied with the time limits of the Contract Documents, and a demand for arbitration is served within the earlier of (a) 120 days after the Date of Substantial Completion approved in writing by the Owner or (b) 60 days after Final Acceptance. This requirement cannot be waived except by an explicit written waiver signed by the Owner and the Contractor. The pendency of mediation shall toll these deadlines until the later of the mediator providing written notice to the parties of impasse or 30 days after the date of the last mediation session.

15.4.2 If the parties have selected arbitration as the method for binding dispute resolution in the Agreement, any Claim, if not resolved by mediation (if Owner elected to mediate), shall be subject to arbitration. The arbitration, unless the parties mutually agree otherwise, shall be administered by the Arbitration Service in accordance with the applicable Arbitration Rules of the Arbitration Service in effect on the date of the Agreement, except there shall be a single arbitrator. The Arbitration shall be conducted in the place where the Project is located, unless another location is mutually agreed upon. A demand for arbitration shall be made in writing, delivered to the other party to the Contract, and filed with the person or entity administering the arbitration. The party filing a notice of demand for arbitration must assert in the demand all Claims then known to that party on which arbitration is permitted to be demanded.

15.4.2.1 A demand for arbitration shall be made no earlier than concurrently with the filing of a request for mediation, but in no event shall it be made after the date when the institution of legal or equitable proceedings based on the Claim would be barred by the applicable statute of limitations. For statute of limitations purposes, receipt of a written demand for arbitration by the person or entity administering the arbitration shall constitute the institution of legal or equitable proceedings based on the Claim.

15.4.3 The award rendered by the arbitrator shall be final, and judgment may be entered upon it in accordance with applicable law in any court having jurisdiction thereof.

15.4.4 The foregoing agreement to arbitrate and other agreements to arbitrate with an additional person or entity duly consented to by parties to the Agreement, shall be specifically enforceable under applicable law in any court having jurisdiction thereof.

15.4.5 Consolidation or Joinder

15.4.5.1 Subject to the rules of the Arbitration Service or other applicable arbitration rules, the Owner, or with Owner approval the Contractor, may consolidate an arbitration conducted under this Agreement with any other arbitration to which it is a party provided that (1) the arbitration agreement governing the other arbitration permits consolidation, (2) the arbitrations to be consolidated substantially involve common

questions of law or fact, and (3) the arbitrations employ materially similar procedural rules and methods for selecting arbitrator(s).

15.4.5.2 Subject to the rules of the Arbitration Service or other applicable arbitration rules, the Owner, or with Owner approval the Contractor, may include by joinder persons or entities substantially involved in a common question of law or fact whose presence is required if complete relief is to be accorded in arbitration, provided that the party sought to be joined consents in writing to such joinder. Consent to arbitration involving an additional person or entity shall not constitute consent to arbitration of any claim, dispute or other matter in question not described in the written consent.

15.4.5.3 Contractor's agreements with its Subcontractors of any tier and material suppliers shall require such Subcontractors and material suppliers, upon demand by Owner, to participate in the mediation and (if applicable) arbitration herein, in accordance with the procedures set forth in this Agreement, and to be bound thereby.

15.4.5.4 With respect to any claim for allegedly defective work or warranty item asserted by or against Owner, or its assignee, successor or subrogee, through court action or arbitration ("Defect Claims"), Owner shall have the right to join Contractor in the proceeding. In the event a proceeding under this Agreement is pending relating to a matter of common fact in the Defect Claim proceeding, the Owner may stay such proceeding under this Agreement pending resolution of the Defect Claim proceeding to the extent allowed by law.

15.4.5.6 If a Claim is litigated at the election of the Owner, the Claim shall be tried in state courts of competent jurisdiction in the county where the Project is located.

15.5 Attorneys' Fees. In the event a suit, action, arbitration, or other proceeding of any nature whatsoever, including without limitation any proceeding under the U.S. Bankruptcy Code, is instituted, or the services of an attorney are retained, to interpret or enforce any provision of this Agreement or with respect to any dispute relating to this Agreement, the prevailing party shall be entitled to recover from the losing party its attorneys', paralegals', accountants', and other experts' fees and all other fees, costs, and expenses actually incurred and reasonably necessary in connection therewith. In the event of suit, action, arbitration, or other proceeding, the amount thereof shall be determined by the judge or arbitrator, shall include fees and expenses incurred on any appeal or review, and shall be in addition to all other amounts provided by law. The prevailing party shall be the party receiving the net award/determined as to each separate claim.

END SECTION

PAYMENT BOND

Bond No. _____

The undersigned, _____ as Principal and _____ as Surety, a corporation organized and existing under the laws of the state of _____, are held and bound unto JUNCTION CITY SCHOOL DISTRICT and its heirs, executers, administrators, and assigns as Obligee, for the use and benefit of all persons or entities that provide labor, materials, equipment or supplies for use under the Contract described below, in the penal sum of_____ _____ Dollars ($_____), lawful money of the United States of America, for the payment of which Principal and Surety bind themselves and their heirs, executors, administrators, successors and assigns, jointly and severally.

WHEREAS Principal has entered into a Construction Contract ("Contract") dated _____, 2026 with Obligee for the LAUREL ELEMENTARY SCHOOL SEISMIC UPGRADE ("Project"), which Contract is made a part hereof as if fully incorporated herein.

NOW, THEREFORE, THE CONDITIONS OF THIS OBLIGATION are such that if Principal shall promptly make payment to all persons or entities that provide labor, material, equipment or supplies for use under said Contract, then this obligation shall be null and void; otherwise, it shall remain in full force and effect. In the event that Principal shall be, and declared by Obligee to be in default under the Contract, the Surety, at the request of the Obligee, shall promptly remedy the default in a manner acceptable to the Owner.

In any event, this obligation shall remain in full force and effect for the applicable period of limitations or repose, whichever is longer.

Surety acknowledges that Obligee does not owe any duty to Surety to advise, notify or consult with Surety on any matters relating to the Principal or the Project, including, but not limited to, Principal's payments to Architect, Subcontractors or Principal's use of Project funds.

Principal and Surety hereby jointly and severally agree that any person or entity that provides labor, material, equipment or supplies for use under said Contract and has not been paid in full, and any other party entitled to make claim on the bond under ORS 279C, if notice is given within the applicable time period set forth in ORS 279C.605 may sue on this bond for the use of such person or entity, prosecute the suit to final judgment for such sums as may be justly due and owing claimant and have execution thereon. Obligee shall not be liable for the payment of any damages, costs or expenses (including attorney fees) awarded in any such suit.

No prepayment or delay in payment and no change, extension, assignment, addition or alteration of any provision of said Contract and no forbearance on the part of Obligee shall operate to relieve Surety from liability on this bond, and Surety hereby consents to any such changes, extensions, additions and alterations without further notice to or consent by Surety.

In the event arbitration, litigation or any other proceeding is brought upon this bond by Obligee and judgment or award is entered in Obligee's favor, Surety shall pay all of Obligee's costs incurred in such arbitration, litigation or other proceeding, including any attorney and expert witness fees.

Nonpayment of the bond premium will not invalidate this bond, nor shall any Obligee be obligated for the payment of any premiums.

This bond is given and received under authority of ORS Chapter 279C, the provisions of which hereby are incorporated into this bond and made a part hereof.

Executed this _____ day of _____, 2026.

_____
PRINCIPAL

_____
Title

_____
Address

_____
SURETY

_____
Title

_____
Address

COUNTERSIGNED:

_____
Resident Agent

_____
Address

PERFORMANCE BOND

Bond No. _____

The undersigned, _____ as Principal and _____ as Surety, a corporation organized and existing under the laws of the state of _____, are held and bound unto JUNCTION CTIY SCHOOL DISTRICT and its heirs, executers, administrators, and assigns as Obligee, in the penal sum of _____ Dollars ($_____), lawful money of the United States of America, for the payment of which Principal and Surety bind themselves and their heirs, executors, administrators, successors and assigns, jointly and severally.

WHEREAS Principal has entered into a Construction Contract ("Contract") dated _____, 2026 with Obligee for LAUREL ELEMENTARY SCHOOL SEISMIC UPGRADE ("Project"), which Contract is made a part hereof as if fully incorporated herein.

NOW, THEREFORE, THE CONDITIONS OF THIS OBLIGATION are such that if Principal shall faithfully, punctually and completely perform and abide with the covenants, terms, conditions and provisions of said Contract and any extensions thereof in all respects and within the time prescribed therein, including, but not limited to, the terms of any warranty and guarantee required under the said Contract; shall pay all laborers, mechanics, subcontractors, material and equipment suppliers and all persons supplying to Principal or its subcontractors and suppliers at any tier labor, materials, supplies or equipment for the prosecution of the work or any part thereof; shall fully defend, indemnify and hold Obligee harmless from all cost and damage that Obligee may suffer by reason of Principal's failure to do so; and shall in all respects perform said Contract according to applicable law, then this obligation shall be null and void; otherwise, it shall remain in full force and effect. In the event that Principal shall be, and declared by Obligee to be in default under the Contract, the Surety, at the request of the Obligee, shall promptly remedy the default in a manner acceptable to the Owner.

In any event, this obligation shall remain in full force and effect for the applicable period of limitations or repose, whichever is longer.

Surety acknowledges that Obligee does not owe any duty to Surety to advise, notify or consult with Surety on any matters relating to the Principal or the Project, including, but not limited to, Principal's payments to Subcontractors or Contractor's use of Project funds.

No prepayment or delay in payment and no change, extension, assignment, addition or alteration of any provision of said Contract and no forbearance on the part of Obligee shall operate to relieve Surety from liability on this bond, and Surety hereby consents to any such changes, extensions, additions and alterations without further notice to or consent by Surety.

In the event arbitration, litigation or any other proceeding is brought upon this bond by Obligee and judgment or award is entered in Obligee's favor, Surety shall pay all of Obligee's costs incurred in such arbitration, litigation, or other proceeding, including any attorney and expert witness fees.

In the event there is an arbitration clause in said Contract, Surety agrees to participate in and to be bound by any such arbitration to the same extent Principal is bound.

Nonpayment of the bond premium will not invalidate this bond, nor shall any Obligee be obligated for the payment of any premiums.

This bond is given and received under authority of ORS Chapter 279C, the provisions of which hereby are incorporated into this bond and made a part hereof.

Executed this _____ day of _____, 2026.

_____
PRINCIPAL

_____
Title

_____
Address

_____
SURETY

_____
Title

_____
Address

COUNTERSIGNED:

_____
Resident Agent

_____
Address

PART 1 GENERAL

1.01 MINIMUM WAGE RATES

A. The minimum wage rates to be paid all crafts and labor on this contract shall be the prevailing wage for the individual crafts involved in the Lane County area during the life of the contract and as determined by the Commissioner of the Oregon Bureau of Labor and Industries, or in the case of a Federal-Aid project, the wage determination decision of the Federal Secretary of Labor, along with conformance to ORS 279C, as may be applicable to the supplying of the services and/or materials called for in the bid.

B. Every contractor and subcontractor shall pay workers not less than the specified minimum hourly rate of wage for each trade or occupation in each locality. When a public works project is subject to Davis-Bacon Act (40 U.S.C. 3141 et seq) that would otherwise be subject to state prevailing wages, if the state prevailing rate of wage is higher than the federal prevailing rate of wage, the contractor and every subcontractor on the project shall pay at least the state prevailing rate of wage.

C. Each worker in each trade or occupation employed in the performance of the contract either by the contractor, subcontractor or other person doing or contracting to do or contracting for the whole or any part of the work on the contract, must be paid not less than the applicable state prevailing rate of wage in accordance with ORS 279C.383 and 279C.840, or the applicable federal prevailing rate of wage, whichever is higher.

1.02 GENERAL REQUIREMENTS

A. If a dispute arises as to what the prevailing wage rate for any class of worker is, and if the dispute cannot be settled by the parties involved, it may be referred to the Commission of the Bureau of Labor and Industries, State of Oregon, for final determination. The Wage Rates are minimum rates only and the Owner will not consider any claims or additional compensation because of payment made by Contractor or a Sub-Contractor of any wage rate in excess of the prevailing rate.

B. Prevailing Wage Rates:

1. Pursuant to ORS Ch. 279C.800 - 279C.870, "Prevailing Wage Rates for Public Works Contracts in Oregon," effective July 5, 2025 with October 5, 2025 amendments, if any, are bound hereinafter and are included as a part of this Specification.

C. Other requirements related to Prevailing Wage are listed in ***00 6000 General Conditions.***

PART 2 PRODUCTS - NOT USED

PART 3 EXECUTION - NOT USED

END OF SECTION

ARTICLE 11 - INSURANCE AND BONDS

Revise 11.1.2: Add the following:

The insurance required by 11.1.1 shall be written for not less than the following limits, or greater if required by law and underwritten by an insurance company rated A or A+ by A.M. Best & Co.

1. **Workers' Compensation:** Statutory

2. **Comprehensive General Liability** (**including Premises-Operations:** Independent Contractor's Protective; Products and Completed Operations; Explosion, Underground & Collapse; Broad-Form Property Damage, Blanket Contractual Liability, Personal Injury with Employment Exclusion Deleted):

   (a) Bodily Injury
   $2,000,000 Each Occurrence
   $4,000,000 Annual Aggregate

   (b) Property Damage
   $2,000,000 Each Occurrence
   $4,000,000 Annual Aggregate

   (c) Products and Completed Operations to be maintained for two (2) years after final payment.

   (d) Property Damage Liability Insurance shall provide X, C and U coverages.

3. **Comprehensive Automobile Liability:**

   (a) Bodily Injury
   $1,000,000 Each Person
   $1,000,000 Each Occurrence

   (b) Property Damage
   $1,000,000 Each Occurrence

4. The Owner shall be named as the Certificate Holder.

5. In addition, furnish true umbrella coverage, which provides excess limits over the primary layer and broader scope, in an amount not less than $2,000,000.

6. Insurance shall be written by a firm licensed to do business in the State of Oregon and as approved by the Owner. The Owner's specification or approval of this insurance or of its amount shall not relieve or decrease the liability of the Contractor under the Contract Documents or otherwise.

11.1.3: Add the following:

The Contractor shall furnish one copy of the General Liability and Automobile Liability policy. The policies shall name the Junction City School District and its members, partners, officers, directors, agents, and employees, and the successors in interest of the foregoing, as Certificate Holder, and them and HMK Company as additional insureds using ISO additional insureds endorsement CG 20 10 11 85 or a substitute providing equivalent coverages within ten (10) days after the Owner issues a "Notice of Intent to Award Contract". The Contractor shall furnish to the Owner copies

of any subsequently issued endorsements amending, modifying, altering or restricting coverage or limits.

11.2 **Subcontractor Insurance.** All Subcontractors' insurance will meet all insurance requirements of Contractor as provided in this Exhibit, including, but not limited to, the types of insurance, extent and durations of coverages, and notice requirements, except that the limits of insurance for Subcontractors will be no less than the following:

Design Professional:

(i) Workers' Compensation and Employer's Liability: same as above except for the following limits for Employer's Liability:

$500,000	Each Accident
$500,000	Disease, Policy Limit
$500,000	Disease, Each Employee

(ii) Commercial General Liability (Occurrence Form): Combined Bodily Injury and Property Damage:

$1,000,000	Each Occurrence
$1,000,000	Personal and Advertising Injury
$2,000,000	General Aggregate
$2,000,000	Products/Completed Operations Aggregate

(iii) Business Auto: same as above.

(iv) Excess/Umbrella Liability Coverage: none required.

(v) Professional Liability ($1,000,000) per claim and ($2,000,000) in the aggregate.

Sub Contractor:

(i) Workers' Compensation and Employer's Liability: same as Contractor

(ii) Commercial General Liability (Occurrence Form): Combined Bodily Injury and Property Damage:

$1,000,000	Each Occurrence
$1,000,000	Personal and Advertising Injury
$2,000,000	General Aggregate
$2,000,000	Products/Completed Operations Aggregate

(iii) Business Auto: same as above.

(iv) Excess/Umbrella Liability Coverage: $1,000,000.

(v) Pollution Liability and Hazardous Materials Liability

$1,000,000	Each Occurrence
$1,000,000	General Aggregate

END OF SECTION

PART 1 GENERAL

1.01 PROJECT

A. Project Name: Laurel Elementary School Seismic Upgrade.

B. Owner's Name: Junction City School District; Troy Stoops, Superintendent.

C. Architect/Consultant's Name: ZCS Inc; Zachary Stokes, PE Principal.

D. The project involves seismic upgrades to multiple areas of the existing Laurel Elementary School building. Work includes structural improvements to enhance the building's overall seismic performance, along with associated construction activities necessary to complete the retrofit.

1.02 CONTRACT DESCRIPTION

1.03 WORK BY OWNER

A. Items noted OFOI (Owner-Furnished, Owner-Installed) will be supplied and installed by Owner before Substantial Completion. Some items include:

B. Items noted OFCI (Owner-Furnished, Contractor-Installed) will be supplied by the Owner for installation by Contractor before Substantial Completion. Some items include:

C. Items noted OFOICC (Owner Furnished, Owner Install, Contractor Coordinated) will be supplied by the Owner, installed by the Owner's contractor, but it is the responsibility of the Contractor to incorporate into the CPM schedule, include in the 3 week look ahead schedule and coordinate installation including blocking and other trade work before Substantial Completion.

1.04 OWNER OCCUPANCY

A. Owner intends to occupy the Project upon Substantial Completion

B. Cooperate with Owner to minimize conflict and to facilitate Owner's operations.

C. Schedule the Work to accommodate Owner occupancy.

1.05 CONTRACTOR USE OF SITE AND PREMISES

A. Except as otherwise stipulated herein, Contractors will have complete use of the Premises within the boundaries of the project as shown on the Drawings for the execution of the Work.

B. The possession, use, or distribution of illicit drugs and alcohol on the Owner's premises is prohibited. Prescription medications brought to the project site shall be in the original container bearing the name of the drug, the name of the physician and the prescribed dosage.

C. TOBACCO FREE INSTITUTION: All bidders shall comply with OAR 581.021.0110 and ORS 326.051 regarding Tobacco Use on Public Grounds. For the purpose of this

document “tobacco” is defined to include any lighted or unlighted cigarette, cigar, pipe, clove cigarette, and any other smoking product, spit tobacco, also known as smokeless, dip, chew, snuff, in any form, nicotine or nicotine delivering devices, chemicals or devices that produce the physical effect of nicotine substances or any other tobacco substitute (e.g., e-cigarettes). This does not include FDA approved nicotine replacement therapy products used for the purpose of cessation. No employee, sub-contractor, material supplier, or project visitor is permitted to smoke, inhale, dip, or chew or sell tobacco at any time, including non-education hours.

1. In any building, facility; or
2. On education facility grounds, athletic grounds, or parking lots.

D. Tools and building materials shall never be left out when an unsecured work area is vacated.

E. Ladders and scaffolding will be taken down when an unsecured work area is vacated.

F. Open holes and other tripping hazards shall be fenced or barricaded when an unsecured work area is vacated.

G. "Secured Work Area" is defined as an area having a perimeter cyclone fence at least 6 feet in height, with gates which close and lock so that no casual entrance is possible by unauthorized personnel.

H. Operations resulting in vapors, emissions or flying objects shall be conducted in such a way as to prevent exposure to any unprotected parties or property.

1.06 WORK SEQUENCE

1.07 DUST PROTECTION AND SAFETY BARRIERS

A. The Contractor shall erect temporary Dust and Safety Barriers around all of the Construction Operations to keep dust and debris within the localized work area, and to protect the owner, staff, and the public from construction activities. Additional requirements may be required if airborne dust is judged by the Owner to be a problem.

B. The Contractor shall take precautions to protect existing smoke detectors from damage or deterioration from dust caused by work of this contract.

1.08 OVERTIME WORK

A. The Contractor shall notify the Owner in writing, at least 48 hours in advance of any overtime work, including nights, weekends, and holidays. Do no overtime work without Owner's prior approval.

B. The Contractor shall reimburse the Architect and Owner for any expenses incurred by them because of Contractor's overtime work.

1.09 WORK IN PUBLIC RIGHT-OF-WAY

A. The Contractor shall obtain any required Permits, pay Permit Fees, arrange for inspections by Regulatory Agencies, and comply with governing Regulatory Agency requirements.

1.10 PROTECTING EXISTING UTILITIES

A. Original Building Drawings and Site Survey Drawings indicate approximate location of any known, concealed Utility Lines. Before starting work, Contractor shall determine exact location of any of these Lines that could be damaged by Contract Work.

B. Contractor shall assume that other unknown Utility Lines do exist, and Contractor shall proceed with caution when working in areas that could conceal unknown Utilities.

C. If such Utility Lines are encountered, immediately request disposition instructions from Architect.

D. If Utility Lines are damaged; remove, repair, or replace Lines as directed. Additional compensation and/or extension of time, if any, caused by removing, repairing, or replacing Lines will be determined in accordance with General Conditions.

1.11 PROTECTING EXISTING LANDSCAPING & TREES

A. Protect existing Trees, not designated for removal, against damage caused by work of this contract.

B. Provide necessary Fencing and Barricades. Erect prior to Work, and unless otherwise instructed, remove after Work completion.

C. Prohibit Earth stockpiling, Material storage, and Vehicle Parking and Traffic within Drip-line of Trees.

D. Prohibit dumping of Refuse, Chemicals, and other Materials and puddling or running Water which may injure Plant growth including Root systems.

E. Prohibit Foot and Vehicle Traffic which may compact Soil over Root Systems.

F. Prohibit any unnecessary cutting, breaking and skinning of Branches and Roots, and prohibit skinning and bruising of Bark. All tree pruning activities shall be conducted by a certified arborist.

G. Prohibit all cutting, breaking, and skinning of branches and roots, and skinning or bruising of bark of any trees within the street Right of Way. Consult with a certified arborist and the Authority havign jurisdiction prior to starting and construction activities that may threaten to damage street trees.

H. Prohibit Fires, High-heat and Smoke adjacent to Trees.

I. Repair or replace with plants of equal size, any material damaged by Construction Operations.

J. Where damaged Trees cannot realistically be repaired or replaced, pay Owner, as Liquidated Damage, value of Trees as determined by Council of Tree & Landscape Appraisers and as distributed by International Society of Arborculture. Copies can be obtained from Society at Box 71, Urbana, IL 61801.

1.12 PROTECTING EXISTING SUBGRADE

A. Contractor shall protect against damage, existing Subgrade and Earthwork provided under this Contract.

B. Where necessary to accomplish required protection, provide additional Temporary Fill or other approved Cover over Work to be protected.

1.13 PROTECT EXISTING STRUCTURES

A. Contractor shall protect against damage, existing building parts not scheduled for repair or remodel under this contract.

B. Where necessary to accomplish required protection, provide additional Temporary barricades, cushioning, or other approved Cover over material to be protected.

1.14 HAZARDOUS MATERIALS

A. Building Materials Containing Asbestos and Lead have been found in this building in the past. The Owner has previously removed or encapsulated most of the asbestos. Asbestos abatement scope that is anticipated to be needed by this Project has been identified and included as part of this Project.

B. However by this notice, the Contractor and the Sub-contractors, and their workers, are asked to be aware of the possible presence of additional Asbestos Bearing Materials, lead and other hazardous materials and if found, or even suspected, to immediately stop work in the area, and notify the Architect and the Owners Project Manager of the location and condition. A separate independent contract may be issued by the Owner to have the suspected material tested and if needed removed or encapsulated.

C. The Contractor and Sub-contractors, and their workers shall be extremely careful when working around any asbestos or encapsulated asbestos materials, and take any necessary precautions to avoid disturbing the asbestos or the encapsulation materials. If the asbestos or the encapsulation is disturbed beyond the Contractor's abatement plan, immediately stop work in the area, and notify the Engineer and the Owners Facility Manager of the location and condition.

1.15 CRIMINAL HISTORY CHECK / PHOTO ID

A. The names of all Contractor and all Subcontractor employees who will be on the job site for more than one day must be submitted to the District. These employees shall fill out a criminal history form provided by the District. Criminal history checks will be run through the Oregon State Police as provided for in ORS 326.603. The District shall bear the cost of processing such Criminal history checks.

1. Through the signature on the criminal history form, authorization is also given to HMKCO and its representative to investigate this information. Further, with this signature, consent is given to all governmental agencies, public or private companies and individuals to release information regarding the individual to the HMKCO and to their representative. The District shall bear the cost of processing such Criminal history checks.

B. In accordance with ORS 326.603(8) the District is required to terminate the employment or contract status of any individual who refuses to consent to a criminal history check of to be

fingerprinted or falsely swears to the non-conviction of any crime.

C. In accordance with ORS 326.603(7)(a) no individual found to have been convicted of any crime listed in ORS 342.143 or of an attempt to commit one of the listed crimes shall be allowed to work on any District site.

1. It is vital that employees are instructed to accurately complete criminal history forms. Crimes listed in ORS 342.143 which automatically bar an individual from employment with or contracting with the District are primarily crimes of violence, crimes against children, and sex related crimes. However, falsely swearing that you have not been convicted of a crime obligates the District to terminate employment or contract status even if the crime is not listed in ORS 342.143.

D. No Employee shall have direct contact with students.

E. All employees working on site for more than one day shall wear a Name and Photo Identification Badge. Any employee on site for less than one day shall wear a visitor badge. Badges shall be the responsibility of the Contractor to provide. Badge shall state the Junction City School District , Laurel Elementary School Seismic Upgrade, employee name, and company they represent.

.

PART 2 PRODUCTS - NOT USED

PART 3 EXECUTION - NOT USED

END OF SECTION

PART 1 GENERAL

1.01 SECTION INCLUDES

A. Procedures for preparation and submittal of applications for progress payments.

B. Documentation of changes in Contract Sum and Contract Time.

C. Change procedures.

D. Correlation of Contractor submittals based on changes.

E. Procedures for preparation and submittal of application for final payment.

F. Schedule of Values.

G. Payments for products stored off site.

1.02 RELATED REQUIREMENTS

A. Section 00 5000 - Agreement Form for additonal requirements. Contract Sum, retainages, payment period, monetary values of unit prices.

B. Section 00 6000 - General Conditions and Section 00 8000 - Supplementary Conditions for additonal requirements for progress payments, final payment, changes in the Work..

C. Section 00 7343 - Prevailing Wage Rates.

1.03 SUBMITTALS

A. Submit a preliminary draft to the Architect 3 weeks prior to the submittal for the first Application. The purpose preliminary draft is to confirm the level of detail required by the Design Team. The Contractor is to make adjusted requested by the Architect. The level of detail may include values as separate lines (entities) for each Specification Section. The Architect will not review any Application submitted until changes requested by the Architect to the preliminary draft have been incorporated.

1.04 SCHEDULE OF VALUES

A. Form to be used: AIA G703 or equivalent.

B. Electronic media printout including equivalent information will be considered in lieu of standard form specified; submit draft to Architect for approval.

C. Forms filled out by hand will not be accepted.

D. Submit Schedule of Values in duplicate within 15 days after date of Owner-Contractor Agreement.

1. The purpose of the preliminary draft is to confirm the level of detail required by the Design Team, and the Contractor is to make adjustments as requested. The Architect will not review any Application submitted until changes requested by the Architect to the preliminary draft have been incorporated.

E. Format: Utilize the Table of Contents of this Project Manual. Identify each line item with number and title of the specification Section. Identify the following.

1. Each major Work Item.

2. Each subcontracted Work Item. For each major Subcontract (i.e. mechanical, electrical and plumbing), list products and operations of that Subcontract as separate line items. List labor and materials seperately for each major subcontractor.

3. Any Products to be stored, for which separate payments will be requested.

F. Include separately from each line item, a direct proportional amount of Contractor's overhead and profit.

G. Revise schedule to list approved Change Orders, with each Application For Payment.

H. Round off values to nearest dollar.

I. Sum of values listed shall equal total Contract Sum.

J. Substantiating Data: When requested by Architect, submit justifying Substantiating Data and Line Item Amounts in question.

1.05 APPLICATIONS FOR PROGRESS PAYMENTS

A. Payment Period: Monthly.
Submit draft payment application to Architect one week prior to end of month. Line items shall include percentage billed of total value of item.

B. Form to be used: AIA G702 and G703.

C. Electronic media printout including equivalent information will be considered in lieu of standard form specified; submit sample to Architect for approval.

D. Forms filled out by hand will not be accepted.

E. Execute certification by signature of authorized officer.

F. Use data from approved Schedule of Values. Provide dollar value in each column for each line item for portion of work performed and for stored products.

G. List each authorized Change Order as a separate line item, listing Change Order number and dollar amount as for an original item of Work. Include individual line items for change orders involving multiple items.

H. Submit one digital copy in PDF format of each Application for Payment.

I. Include the following with the application:

1. Construction progress schedule, revised and current as specified in Section 01 3000.

2. Payment for materials and equipment stored off the site shall be conditioned upon compliance by the Contractor with procedures satisfactory to the Owner.

J. When Architect requires substantiating information, submit data justifying dollar amounts in question. Provide one copy of data with cover letter for each copy of submittal. Show application number and date, and line item by number and description.

K. Submit Applications for Payment to Architect at times stipulated below.

L. When Architect finds Application properly completed and correct, Architect will transmit 3 copies of Certificate for Payment to Owner for approval of payment, with one copy to Contractor, and one retained for files.

1.06 ALTERNATE CONSTRUCTION PAYMENT MANAGEMENT SYSTEMS:

A. Nothing contained herein would prohibit the Contractor from proposing the use of a Construction Payment Management System that substantially complies with the requirements of this section. The contractor shall pay all additional fees associated with the Owner and Architect's use of this system.

1.07 PAYMENT FOR PRODUCTS STORED OFF THE PROJECT SITE

A. When delay or added cost to Owner can be avoided by storing Products off Site, Owner will make payment to Contractor for said Products provided that

B. Contractor shall:

1. Locate Storage Facilities within 20 miles of the Architect's Office or the Project Site.

2. Make Storage Facilities available for Architect's visual inspection.

3. Segregate and label Stored Products for specified Project.

4. Assume all risk for loss.

5. Assume responsibility for exceeding Product "Shelf-Life".

6. Protect Stored Products and provide applicable Insurance against their damage, discoloration, and theft, listing the Owner and any Mortgagee as Additional Named Insured.

7. Submit itemized Inventory and Schedule of Values for Stored Products together with Certificate of Insurance.

8. Submit payment requests to Owner as part of Contractor's regular Progress Payment Request. Payment requests can only be for the actual invoiced amount to the contractor or sub-contractor by their respective material supplier. Provide copies of invoice to justify amount requested.

9. Reimburse Owner for damages sustained if Stored Products are not delivered to Jobsite when needed.

10. Submit to Owner, with copy to Architect, a written Waiver of Lien insuring Owner against claims for unpaid Storage Costs.

11. Upon receipt of payment from Owner, prepare and issue to Owner, with a copy for Architect, and any Mortgagee, a Bill of Sale for Stored Products.

1.08 PREVAILING WAGE PAYMENT CERTIFICATION

A. Submit Prevailing Wage Payment Certification Forms as required by Section 00 7343.

1.09 APPLICATION PAYMENT SCHEDULE

A. Within 15 Days, following Owner's approval of payment of in-order Application for Payment, the Owner will:

1. Until Substantial Completion, pay Ninety-Five Percent (95%) as defined in General Conditions during the previous month, as estimated by Architect.

B. After execution of Certificate of Substantial Completion, and within 15 days, following Owner's approval of payment of the next in-order Application for Payment, the Owner will pay:

1. Balance due under Contract, excluding a Retainage Amount of at least $1,000, or double the estimated value of uncompleted and/or unacceptable portions of Work, whichever is the greater amount.

C. Thirty (30) days after final inspection and acceptance by Owner, and within 15 days following Owner's approval of payment of final in-order Application for Payment, the Owner will pay:

1. Balance due under Contract, provided Work be then fully completed and Contract be then fully performed.

1.10 MODIFICATION PROCEDURES

A. Submit name of the individual authorized to receive change documents and who will be responsible for informing others in Contractor's employ or subcontractors of changes to the Contract Documents.

B. For minor changes not involving an adjustment to the Contract Sum or Contract Time, Architect will issue instructions directly to Contractor.

C. For other required changes, Architect will issue a Construction Change Directive document signed by Owner instructing Contractor to proceed with the change, for subsequent inclusion in a Change Order.

1. The document will describe the required changes and will designate method of determining any change in Contract Sum or Contract Time.

2. Promptly execute the change.

D. For changes for which advance pricing is desired, Architect will issue a Proposal Request document that includes a detailed description of a proposed change with supplementary

or revised drawings and specifications, a change in Contract Time for executing the change with a stipulation of any overtime work required and the period of time during which the requested price will be considered valid. Contractor shall prepare and submit a fixed price quotation within 7 calendar days.

E. Contractor may propose a change by submitting a request for change to Architect, describing the proposed change and its full effect on the Work, with a statement describing the reason for the change, and the effect on the Contract Sum and Contract Time with full documentation and a statement describing the effect on Work by separate or other contractors. Document any requested substitutions in accordance with Section 01 6000.

F. Computation of Change in Contract Amount: As specified in the Agreement and Conditions of the Contract.

1. For change requested by Architect for work falling under a fixed price contract, the amount will be based on Contractor's price quotation.

2. For change requested by Contractor, the amount will be based on the Contractor's request for a Change Order as approved by Architect.

3. For pre-determined unit prices and quantities, the amount will based on the fixed unit prices.

4. For change ordered by Architect without a quotation from Contractor, the amount will be determined by Architect based on the Contractor's substantiation of costs as specified for Time and Material work.

G. Substantiation of Costs: Provide full information required for evaluation.

1. On request, provide the following data:

a. Quantities of products, labor, and equipment.

b. Taxes, insurance, and bonds.

c. Overhead and profit.

d. Justification for any change in Contract Time.

e. Credit for deletions from Contract, similarly documented.

2. Support each claim for additional costs with additional information:

a. Origin and date of claim.

b. Dates and times work was performed, and by whom.

c. Time records and wage rates paid.

d. Invoices and receipts for products, equipment, and subcontracts, similarly documented.

3. For Time and Material work, submit itemized account and supporting data after completion of change, within time limits indicated in the Conditions of the Contract.

H. Execution of Change Orders: Architect will issue Change Orders for signatures of parties as provided in the Conditions of the Contract.

I. After execution of Change Order, promptly revise Schedule of Values and Application for Payment forms to record each authorized Change Order as a separate line item and adjust the Contract Sum.

J. Promptly revise progress schedules to reflect any change in Contract Time, revise sub-schedules to adjust times for other items of work affected by the change, and resubmit.

K. Promptly enter changes in Project Record Documents.

1.11 APPLICATION FOR FINAL PAYMENT

A. Prepare Application for Final Payment as specified for progress payments, identifying total adjusted Contract Sum, previous payments, and sum remaining due.

B. Application for Final Payment will not be considered until the following have been accomplished:

1. All closeout procedures specified in Section 01 7000.

2. Submit final Application for Payment with unconditional lien releases and supporting documentation not previously submitted and accepted in accordance with requirements of General Conditions.

PART 2 PRODUCTS - NOT USED

PART 3 EXECUTION - NOT USED

END OF SECTION

PART 1 GENERAL

1.01 SECTION INCLUDES

A. Description of Alternates.

B. Procedures for pricing Alternates.

1.02 RELATED REQUIREMENTS

A. Document 00 2113 - Instructions to Bidders: Instructions for preparation of pricing for Alternates.

B. Document 00 4100 - Bid Form: List of Alternates.

1.03 SUBMISSION REQUIREMENTS

A. Indicate variation of Bid Price for Alternates described below. The Bid Form requests a "difference" in Bid Price by adding to or deducting from the Base Bid Price.

1.04 ACCEPTANCE OF ALTERNATES

A. Alternates quoted on Bid Forms will be reviewed and accepted or rejected at Owner's option. Accepted Alternates will be identified in the Owner-Contractor Agreement.

B. Coordinate related work and modify surrounding work to integrate the Work of each Alternate.

C. Bids will be evaluated on the Base Bid price plus any or all of the Alternates intended to be exercised by the Owner. The order of the Alternates listed here does not represent the order in which any of these Alternates will be exercised.

1.05 PROCEDURES

A. Coordination: Modify or adjust affected adjacent work as necessary to completely integrate work of the alternate into Project.

1. Include as part of each alternate, miscellaneous devices, accessory objects, and similar items incidental to or required for a complete installation whether or not indicated as part of alternate.

1.06 SCHEDULE OF ALTERNATES

A. Alternate No. 1 – Installation of seismic joint along Grid (9) and all associated demolition and construction. Refer to drawings for full scope.

PART 2 PRODUCTS - NOT USED

PART 3 EXECUTION - NOT USED

END OF SECTION

PART 1 GENERAL

1.01 SECTION INCLUDES

A. Preconstruction meeting.

B. Progress meetings.

C. Submittals for review, information, and project closeout.

D. Number of copies of submittals.

E. Submittal procedures.

1.02 RELATED REQUIREMENTS

A. Section 00 6000 - General Conditions.

B. Section 01 3216 - Construction Progress Schedule: Form, content, and administration of schedules.

C. Section 01 7000 - Execution and Closeout Requirements: Additional coordination requirements.

D. Section 01 7800 - Closeout Submittals: Project record documents.

1. Where submittals are indicated for review by both Architect and the Commissioning Authority, submit one extra and route to Architect first, before forwarding to the Commissioning Authority.

2. Where submittals are not indicated to be reviewed by Architect, submit directly to the Commissioning Authority; otherwise, the procedures specified in this section apply to commissioning submittals.

1.03 CONSTRUCTION ORGANIZATION & START-UP

A. Responsible Parties:

1. Immediately following Contract execution, Owner will and Contractor shall identify who, within their respective organizations, will be responsible for Project Coordination.

B. The Contractor shall establish on-site Lines of Authority and Communications including the following:

1. Schedule attendance at Preconstruction Meeting and schedule and conduct Progress Meetings as specified in Section 01 3000. Owner's Project Manager will chair meeting and record and distribute meeting minutes.

2. Establish procedures for Intra-project Communications including:

a. Submittals.

b. Reports & Records.

c. Recommendations.

d. Coordination Drawings.

e. Schedules.

f. Resolution of Conflicts.

3. Technical Documents Interpretation:

a. Consult with Architect to obtain interpretation.

b. Assist in resolution of questions or conflicts which may arise.

c. Transmit written interpretations to Subcontractors and to other concerned parties.

4. Permits & Approvals:

a. Verify that Subcontractors have obtained required Permits and Inspections for Work and for Temporary Facilities.

5. Control use of Site:

a. Supervise Field Engineering and Project Layout.

b. Allocate Field Office Space and Work and Storage Areas for use of each Subcontractor.

1.04 COORDINATING SUBCONTRACTORS' WORK

A. Coordinate the Work of all Subcontractors and make certain that, where the Work of one Trade is dependent upon the Work of another Trade, the Work first installed is properly placed, installed, aligned, and finished as specified or required to properly receive subsequent Materials applied or attached thereto.

B. Direct Subcontractors to correct defects in Substrates they install when Subcontractors of subsequent Materials have a reasonable and justifiable objection to such surfaces.

C. Do not force Subcontractors to apply or install Products to improperly placed or improperly finished Substrates that would result in an unsatisfactory or unacceptable finished Product.

1.05 COORDINATING WORK WITH WORK OF OWNER OR OTHER CONTRACTS

A. Coordinate, and make certain that, where Work of either party is dependent upon the other party, the Work first performed is properly placed, installed, aligned, and finished as required to permit the proper installation of the Work following.

B. If the Owner's Work in any way interferes with the Contractor's Work, so notify the Owner sufficiently in advance so that the Owner has reasonable time to make necessary adjustments.

C. If the Contractor's Work in any way interferes with Owner's Work, so notify the Owner as soon as possible. If the Contractor's Work must be modified to accommodate the Owner's Work, except as described elsewhere in this Specification, the Contract Sum and/or the Contract Time will, when necessary be adjusted by a Change Order.

D. Mechanical & Electrical Equipment start-up:

1. Coordinate check-out of Utilities, Operational Systems, and Equipment.

2. Assist in initial start-up and testing.

3. Record starting dates of Systems and Equipment operation.

E. At completion of Work of each Subcontract, conduct inspection to assure that:

1. Work is acceptable.

2. Specified cleaning has been accomplished, and Temporary Facilities and Debris has been removed from Site.

F. Substantial Completion: See Section 00 2113 1.13.

G. Final Completion: See Section 00 2113 1.13.

PART 2 PRODUCTS - NOT USED

PART 3 EXECUTION

3.01 PRECONSTRUCTION MEETING

A. Owner will schedule a meeting after Notice of Award.

B. Attendance Required:

1. Owner.

2. Architect.

3. Contractor.

4. Contractor's Superintendent.

5. Major Subcontractors.

6. Building Commissioning Agent.

C. Agenda:

1. Introductions.

2. Execution of Owner- Contractor Agreement.

3. Submission of executed bonds, insurance certificates and background checks.

4. Description of Project

5. Distribution of Contract Documents.

6. Submission of list of Subcontractors, list of Products, schedule of values, and progress schedule.

7. Designation of personnel representing the parties to Contract, Owner and Architect.

8. Procedures and processing of field decisions, submittals, substitutions, applications for payments, proposal request, Change Orders, and Contract closeout procedures.

    a. Written Change Order requests required.

    b. Supporting back-up will be required for all Change Orders.

    c. Describe Contractor's procedure for review and oversight in the preparation of Change Orders.

    d. Mark-up limitations on Change Orders (See General Conditions Article 7.1.4).

    e. Processing time required.

    f. Applications for Payment

        1) Use AIA documents G702 and G703 latest edition

        2) Provide 4 signed and notarized copies

        3) Wage certifications to be attached

9. Scheduling, start date and date of substantial completion.

10. Building permit status.

11. Prevailing wage requirements.

12. Public Agency submittal of RESPONSIBILITY DETERMINATION FORM to Construction Contractor's Board.

13. Communications.

14. Role of Owner's Project Manager.

15. Employee Security Screening and Identification Badging.

16. Submittals required per Contract Documents. Contractor to provide a comprehensive submittal log listing all required submitals, shop drawings, O&M's, warranties, training, commissioning submitals, closeout documents.

17. MSDS Information.

18. Erosion control procedures.

19. Waste management procedures.

20. Environmental quality requirements.

21. Hazardous materials.

22. Construction activities, working hours, use of site and building.

23. Staging and parking areas.

24. Temporary facilities and utilities.

25. Request for information and clarification of design

26. Correction of Defects.

27. Weekly on-site progress meetings.

28. Safety and Emergency Procedures.

29. Verify that Contractor's Mandatory Drug Testing Program is in place.

30. Daily Clean-up

31. Project Closeout, substantial completion, final completion.

32. Record drawings and Operations and Maintenance Manuals

33. Tour of Project by Owner's staff and guests (if applicable)

34. Additional Comments

D. Owner Representative will record minutes and distribute copies within two days after meeting to participants, with digital copies to Owner, participants, and those affected by decisions made. These meeting minutes are the official record of the meeting. Notify HMK Company immediately of any errors and / or ommissions in the meeting minutes. In absence of corrections, these meeting minutes will be considered correct and complete as written.

3.02 PROGRESS MEETINGS

A. Schedule and administer meetings throughout progress of the Work at weekly intervals. Owner’s Representative will conduct these meetings.

B. The Owner’s Representative will make arrangements for meetings, prepare agenda with copies for participants, and preside at meetings. The Contractor shall provide copies of schedule and all logs prior to meeting.

C. Attendance Required:

1. Contractor.
2. Owner.
3. Architect.
4. Contractor's Superintendent.
5. Major Subcontractors on as-needed basis.

D. Agenda:

1. Review minutes of previous meetings.
2. Review of Work progress.
3. Field observations, problems, decisions and safety violations or injuries.
4. Identification of problems that impede, or will impede, planned progress.
5. Review of submittals schedule and status of submittals.
6. Review of off-site fabrication and delivery schedules.
7. Maintenance of progress schedule.
8. Corrective measures to regain projected schedules.
9. Planned progress during succeeding work period.
10. Coordination of projected progress.
11. Maintenance of quality and work standards.
12. Effect of proposed changes on progress schedule and coordination.
13. Other business relating to Work.

E. The Owner's Project Manager will record minutes and distribute copies within two days after meeting to participants, with digital copies to Contractor, Owner, participants, and those affected by decisions made. These meeting minutes are the official record of the meeting. Notify HMK Company immediately of any errors and / or ommissions in the meeting minutes. In absence of corrections, these meeting minutes will be considered correct and complete as written.

3.03 PRE-INSTALLATION CONFERENCES

A. When required in individual specification sections, the Contractor shall convene a pre-installation meeting prior to commencing work of that section.

B. Require attendance of parties directly affecting, or affected by, work of the specific section.

C. Notify Architect, Owner Representative, Owner, and any owner retained third party consultant minimum four days in advance of meeting date.

D. The Contractor shall be responsible to prepare agenda and preside at meeting:

1. Provide copies for the participants of all pertinent specification sections, submittals, and drawings with details.

2. Review conditions of installation, preparation and installation procedures.

3. Review coordination with related work.

E. The Contractor shall be responsible to record minutes and distribute copies within two days after meeting to participants, with copies to Architect, Owner's Project Manager, participants, and those affected by decisions made.

3.04 CONSTRUCTION PROGRESS SCHEDULE - SEE SECTION 01 3216

3.05 SUBMITTALS FOR REVIEW

A. When the following are specified in individual sections, submit them for review:

1. Product data.

2. Shop drawings.

3. Samples for selection.

4. Samples for verification.

5. Other information required in individual specification sections.

B. Submit to Architect for review for the limited purpose of checking for conformance with information given and the design concept expressed in the contract documents.

C. Product Data:

1. Clearly mark each copy to identify pertinent Products.

2. Show performance characteristics and capacities.

3. Show dimensions, field dimensions, and required clearances.

4. Show wiring and piping diagrams, and controls.

5. Show standard schematic drawings and diagrams:

a. Modify to delete information not applicable to Work.

b. Supplement standard information to provide information specifically applicable to Work.

c. Assure that any photo copied material is clearly legible or provide all original material.

D. Samples will be reviewed only for aesthetic, color, or finish selection.

E. After review, provide copies and distribute in accordance with SUBMITTAL PROCEDURES article below and for record documents purposes described in Section 01 7800 - Closeout Submittals.

3.06 SUBMITTALS FOR INFORMATION

A. When the following are specified in individual sections, submit them for information:

1. Design data.

2. Certificates.

3. Test reports.

4. Inspection reports.

5. Manufacturer's instructions.

6. Manufacturer's field reports.

7. Other information required in individual specification sections.

8. Other types indicated.

B. Submit for Architect's knowledge as contract administrator or for Owner. No action will be taken.

3.07 SUBMITTALS FOR PROJECT CLOSEOUT

A. Submit Correction Punch List for Substantial Completion.

B. Submit Final Correction Punch List for Substantial Completion.

C. When the following are specified in individual sections, submit them at project closeout:

1. Project record documents.

2. Operation and maintenance data.

3. Warranties.

4. Bonds.

5. Other information required in individual specification sections.

6. Other types as indicated.

D. Submit for Owner's benefit during and after project completion.

3.08 NUMBER OF COPIES OF SUBMITTALS

A. Electronic Documents: Submit one electronic copy in PDF format; an electronically-marked up file will be returned. Create PDFs at native size and right-side up; illegible files will be rejected.

B. Samples: Submit the number specified in individual specification sections; two of which will be retained by Architect.

1. After review, produce duplicates.

2. Retained samples will not be returned to Contractor unless specifically so stated.

3. Show full range of color, texture & pattern.

3.09 SUBMITTAL PROCEDURES

A. Shop Drawing Procedures:

1. Prepare accurate, drawn-to-scale, original shop drawing documentation by interpreting the Contract Documents and coordinating related Work.

2. Generic, non-project specific information submitted as shop drawings do not meet the requirements for shop drawings.

B. Transmit each submittal with a copy of approved submittal form.

C. Transmit each submittal with a transmittal form that clearly describes submittal contents and the quantity of items delivered.

D. Sequentially number the transmittal form. Revise submittals with original number and a sequential alphabetic suffix.

E. Identify Project, Contractor, Subcontractor or supplier; pertinent drawing and detail number, and specification section number, as appropriate on each copy.

F. Apply Contractor's stamp, signed or initialed certifying that review, approval, verification of Products required, field dimensions, adjacent construction Work, and coordination of information is in accordance with the requirements of the Work and Contract Documents.

G. Deliver submittals to Architect at business address.

H. Schedule submittals to expedite the Project, and coordinate submission of related items.

I. For each submittal for review, allow 15 days excluding delivery time to and from the Contractor.

J. Identify variations from Contract Documents and Product or system limitations that may be detrimental to successful performance of the completed Work.

K. Notify Architect in writing, at submission time, of any deviations in Submittals from Contract Document requirements.

L. Provide space for Contractor and Architect review stamps.

M. When revised for resubmission, identify all changes made since previous submission.

N. Distribute reviewed submittals as appropriate. Instruct parties to promptly report any inability to comply with requirements.

O. Submittals not requested will not be recognized or processed.

P. Submit Shop Drawings, Product Data, and Samples only for those Items specifically required. The Architect will not be obligated to review Shop Drawings, Product Data, or Samples other than those required by the Contract Documents.

Q. Perform no Work or Fabrication requiring Submittal until Architect approves Submittal.

END OF SECTION

PART 1 GENERAL

1.01 SECTION INCLUDES

A. Preliminary schedule.

B. Construction progress schedule, bar chart type.

C. Construction progress schedule, three week look ahead.

1.02 RELATED SECTIONS

A. Section 01 1000 - Summary: Work sequence.

B. Section 00 6000 - General Conditions.

1.03 SUBMITTALS

A. Within 10 days after date of Agreement, submit preliminary schedule defining planned operations for the first 60 days of Work, with a general outline for remainder of Work.

B. If preliminary schedule requires revision after review, submit revised schedule within 10 days.

C. Within 20 days after review of preliminary schedule, submit draft of proposed complete schedule for review.

D. Within 10 days after joint review, submit complete schedule.

E. Submit updated schedule with each Application for Payment.

F. Submit schedules as a PDF file to the Architect and Owner.

1.04 SCHEDULE FORMAT

A. Primevera P6

B. Listings: In chronological order according to the start date for each activity. Identify each activity with the applicable specification section number.

C. Sheet Size: 11 x 17 inches or 22 x 34 inches.

1.05 PROJECT SCHEDULER QUALIFICATIONS

A. Designate an authorized representative to be responsible for the preparation of the schedule and all required updating and production of reports.

B. The authorized representative must have a minimum of two (2) years of experience scheduling construction projects similar in size, nature, and complexity to this project with scheduling software that meets the requirements of this specification.

C. Representative must have a comprehensive knowledge of CPM scheduling principles and application, and use of computer facilities capable of delivering detailed graphic printouts within 48 hours of request.

PART 2 PRODUCTS

2.1 SOFTWARE

The scheduling software utilized to produce and update the schedules required herein must be capable of meeting all requirements of this specification.

A. Owner requires the CM/GC to use Primavera P6 by Oracle. Provide the "xer" export file in a version of P6 importable by the Owners system.

B. Provide for Owner one (1) license, and a minimum of eight (8) hours of training for Owner in the use of the software. Licenses will be returned at project completion.

C. Importing data into P6 using data conversion techniques or third-party software is not allowed and shall be cause for rejection of the submitted schedule.

D. A list of scheduling software settings and parameters which must be used in preparing the Schedules have been provided and are contained later in this specification section. Deviation from these settings and parameters, without prior consent of the CM, is cause for rejection of schedule submission.

E. Provide the “xer” export file in a version of Primavera P6 by oracle importable by the CM.

PART 3 EXECUTION

3.01 PRELIMINARY SCHEDULE

A. Prepare preliminary schedule in the form of a horizontal bar chart.

3.02 CONTENT

A. Level of Detail Required

Develop the Project Schedule to the appropriate level of detail to address major milestones and to allow for satisfactory project planning and execution. Failure to develop the Project Schedule to an appropriate level of detail will result in its disapproval. The CM will consider, but is not limited to, the following characteristics and requirements to determine appropriate level of detail.

B. Activity Durations

Reasonable activity durations are those that allow the progress of ongoing activities to be accurately determined between update periods. Non-procurement activities shall not have Original Durations (OD) greater than 20 workdays or 30 calendar days.

C. Permit Activities

Include permit activities with the necessary conferences and follow-up actions and submission dates. Include the permit schedule in the project schedule, showing the sequence of events involved in carrying out the permitting procurement tasks within the specific contract period. Provide at a detailed level of scheduling sufficient to identify all major permitting tasks, including those that control the flow of work. Also, include review and correction periods associated with each item.

D. Preconstruction Submittals

Include preconstruction submittals that are required prior to start of construction (work), issuance of contract notice-to-proceed, commencing work on site, or the start of the next major phase of the construction on a multi-phase contract. Include the preconstruction submittal schedule in the project schedule. Provide at a detailed level of scheduling sufficient to identify all major submittal or review tasks, including those that control the flow of work. Also, include review and correction periods associated with each item.

E. Procurement Activities

Include activities associated with the critical submittals and their approvals, procurement, fabrication, and delivery of long lead materials, equipment, fabricated assemblies, and supplies. Long lead procurement activities are those with an anticipated procurement sequence of over 90 calendar days.

F. Mandatory Tasks

Include the following activities/tasks in the initial project schedule and all updates.

1. Submission, review, and acceptance of Preconstruction Submittals (individual activity for each).

2. Submission, review, and acceptance of features require design coordination or completion submission, review, and acceptance.

3. Submission of mechanical/electrical/information systems layout drawings.

4. Long lead procurement activities

5. Submission and approval of O & M manuals.

6. Submission and approval of as-built drawings.

7. Submission and approval of testing and air balance (TAB).

8. Submission of TAB specialist design review report.

9. Submission and approval of fire protection specialist.

10. Submission and approval of Building Commissioning Plan, test data, and reports:

    Develop the schedule logic associated with testing and commissioning of mechanical systems to a level of detail consistent with the contract commissioning requirements. All tasks associated with all building testing and commissioning will be completed prior to submission of building commissioning report and subsequent contract completion.

11. Air and water balancing.

12. Building commissioning - Functional Performance Testing.

13. Controls testing plan submission.

14. Controls testing.

15. Performance Verification testing.

16. Other systems testing, if required.

17. Contractor's pre-final inspection.

18. Correction of punch list from Contractor's pre-final inspection.

19. GWA pre-final inspection.

20. Correction of punch list from pre-final inspection.

21. Final inspection.

G. Owner Activities

1. Show Owner and other agency activities that could impact progress. These activities include, but are not limited to: approvals, acceptance, design reviews, environmental permit approvals by local regulators, inspections, utility tie-in, Owner Furnished Equipment (OFE), Notice-to-Proceed (NTP) for phasing requirements

2. Contract Milestones and Constraints: Milestone activities are to be used for significant project events including, but not limited to, project phasing, project start and end activities, or interim completion dates. The use of artificial float constraints such as "zero free float" or "zero total float" are prohibited. Mandatory constraints that ignore or effect network logic are prohibited. No constrained dates are allowed in the schedule other than those specified herein. Submit additional constraints to the for approval on a case by case basis.

   a. Project Start Date Milestone and Constraint

      1) The first activity in the project schedule must be a start milestone titled "NTP Acknowledged," which must have a "Start On" constraint date equal to the date that the NTP is acknowledged.

   b. End Project Finish Milestone and Constraint

      1) The last activity in the schedule must be a finish milestone titled "End Project." Constrain the project schedule to the Contract Completion Date in such a way that if the schedule calculates an early finish, then the float calculation for "End Project" milestone reflects positive float on the longest path. If the project schedule calculates a late finish, then the "End Project" milestone float calculation reflects negative float on the longest path. The Owner

is under no obligation to accelerate Owner activities to support a Contractor's early completion.

c. Interim Completion Dates and Constraints

1) Constrain contractually specified interim completion dates to show negative float when the calculated late finish date of the last activity in that phase is later than the specified interim completion date.

i. Start Phase: Use a start milestone as the first activity for a project phase. Call the start milestone "Start Phase X" where "X" refers to the phase of work.

ii. End Phase: Use a finish milestone as the last activity for a project phase. Call the finish milestone "End Phase X" where "X" refers to the phase of work.

J. Calendars

1. Schedule activities on a Calendar to which the activity logically belongs. Develop calendars to accommodate any contract defined work period such as a 7-day calendar for GWA Acceptance activities, concrete cure times, etc. Develop the default Calendar to match the physical work plan with non-work periods identified including weekends and holidays. Develop Seasonal Calendar(s) and assign to seasonally affected activities as applicable.

2. Open Ended Logic. Only two open ended activities are allowed: the first activity "NTP Acknowledged" may have no predecessor logic, and the last activity -"End Project" may have no successor logic. Predecessor open ended logic may be allowed in a time impact analyses upon the CM's approval.

L. Default Progress Data Disallowed

1. Actual Start and Finish dates must not automatically update with default mechanisms included in the scheduling software. Updating of the percent complete and the remaining duration of any activity must be independent functions. **Disable program features that calculate one of these parameters from the other.** Activity Actual Start (AS) and Actual Finish (AF) dates assigned during the updating process must match those dates provided in the Contractor Quality Control Reports. Failure to document the AS and AF dates in the Daily Quality Control report will result in disapproval of the Contractor's schedule.

M. Out-of-Sequence Progress

1. Activities that have progressed before all preceding logic has been satisfied (Out-of-Sequence Progress) will be allowed only on a case-by-case basis subject to approval by the CM. Propose logic corrections to eliminate out of sequence progress or justify not changing the sequencing for approval prior to submitting an updated project schedule. Address out of sequence progress or logic changes in the Narrative Report and in the periodic schedule update meetings.

N. Added and Deleted Activities

1. Do not delete activities from the project schedule or add new activities to the schedule without approval from the CM. Activity ID and description changes are considered new activities and cannot be changed without CM approval.

O. Original Durations

1. Activity Original Durations (OD) must be reasonable to perform the work item. OD changes are prohibited unless justification is provided and approved by the CM.

P. Leads, Lags, and Start to Finish Relationships

1. Lags must be reasonable as determined by the CM and not used in place of realistic original durations and must not be in place to artificially absorb float, or to replace proper schedule logic.

a. Leads (negative lags) are prohibited.

b. Starts to Finish (SF) relationships are prohibited.

Q. Retained Logic

1. Schedule calculations must retain the logic between predecessors and successors ("retained logic" mode) even when the successor activity(s) starts, and the predecessor activity(s) has not finished (out-of-sequence progress). Software features that in effect sever the tie between predecessor and successor activities when the successor has started, and the predecessor logic is not satisfied ("progress override") are not allowed.

R. Percent Complete

1. Update the percent complete for each activity started, based on the realistic assessment of earned value. Activities which are complete but for remaining minor punch list work and which do not restrain the initiation of successor activities may be declared 100 percent complete to allow for proper schedule management.

S. Remaining Duration

1. Update the remaining duration for each activity based on the number of estimated workdays it will take to complete the activity. Remaining duration may not mathematically correlate with percentage found under paragraph entitled Percent Complete.

3.03 BAR CHARTS

A. Include a separate bar for each major portion of Work or operation.

B. Identify the first work day of each week.

3.04 THREE WEEK LOOK AHEAD SCHEDULE

A. Each week during construction, provide schedule to look ahead three weeks and record actual progress of the preceding week. Schedule can’t be derived from the Project

Scheduling Software. Provide increased detail as requested by the Owner or Architect to clearly show the work planned for the upcoming weeks.

B. Distribute 24 hours prior to the beginning of each weekly project meeting.

3.05 REVIEW AND EVALUATION OF SCHEDULE

A. Participate in joint review and evaluation of schedule with Architect at each submittal.

B. Evaluate project status to determine work behind schedule and work ahead of schedule.

C. After review, revise as necessary as result of review, and resubmit within 10 days.

3.06 UPDATING SCHEDULE

A. Maintain schedules to record actual start and finish dates of completed activities.

B. Indicate progress of each activity to date of revision, with projected completion date of each activity.

C. Annotate diagrams to graphically depict current status of Work.

D. Identify activities modified since previous submittal, major changes in Work, and other identifiable changes.

E. Indicate changes required to maintain Date of Substantial Completion.

F. Submit reports required to support recommended changes.

G. Contractor is required to submit an as-constructed schedule update, with changes noted above with each pay application.

H. Float: The critical path activities shall be highlighted, float and non-critical activities shall be shown and the start and stop times for each activity shall be listed. Float belongs to the benefit of the Project for the Owner’s use and no float shall be used without the Owner’s written approval.

3.07 DISTRIBUTION OF SCHEDULE

A. Distribute copies of updated schedules to Contractor's project site file, to Subcontractors, suppliers, Architect, Owner, and other concerned parties.

B. Instruct recipients to promptly report, in writing, problems anticipated by projections shown in schedules.

3.08 RECOVERY SCHEDULE

A. Should any conditions exist, such that certain activities shown on the Contractor's Detailed Construction Schedule fall behind schedule to the extent that any of the mandatory specific or Milestone States or Completion Dates are in jeopardy, the Contractor shall be required to, at no cost to the Owner, prepare and submit within three working days to the Project Manager a supplementary Recovery Schedule, in a form and detail appropriate to the need, to explain and display how he

intends to reschedule those activities to regain compliance with the Detailed Construction Schedule during the immediate subsequent pay period.

END OF SECTION

PART 1 GENERAL

1.01 SECTION INCLUDES

A. Submittals.

B. References and standards.

C. Testing and inspection agencies and services.

D. Control of installation.

E. Mock-ups.

F. Tolerances.

G. Manufacturers' field services.

H. Defect Assessment.

1.02 RELATED REQUIREMENTS

A. Available Project Information: Geotechnical investigation data.

B. Section 00 6000 - General Conditions: Inspections and approvals required by public authorities.

C. Section 01 3000 - Administrative Requirements: Submittal procedures.

D. Section 01 6000 - Product Requirements: Requirements for material and product quality.

1.03 REFERENCE STANDARDS

A. ASTM C1021 - Standard Practice for Laboratories Engaged in Testing of Building Sealants; 2008 (Reapproved 2014).

B. ASTM C1077 - Standard Practice for Laboratories Testing Concrete and Concrete Aggregates for Use in Construction and Criteria for Laboratory Evaluation; 2014.

C. ASTM C1093 - Standard Practice for Accreditation of Testing Agencies for Masonry; 2013.

D. ASTM D3740 - Standard Practice for Minimum Requirements for Agencies Engaged in the Testing and/or Inspection of Soil and Rock as Used in Engineering Design and Construction; 2012a.

E. ASTM E329 - Standard Specification for Agencies Engaged in Construction Inspection, Testing, or Special Inspection; 2014a.

F. ASTM E543 - Standard Specification for Agencies Performing Nondestructive Testing; 2013.

G. OSSC - Oregon Structural Specialty Code, latest edition.

1.04 SUBMITTALS

A. See Section 01 3000 - Administrative Requirements, for submittal procedures.

B. Design Data: Submit for Architect's knowledge as contract administrator for the limited purpose of assessing conformance with information given and the design concept expressed in the contract documents, or for Owner's information.

C. Test Reports: After each test/inspection, promptly submit copies of report to Architect, Owners Representative, and to Contractor.

1. Include:

a. Date issued.

b. Project title and number.

c. Name of inspector.

d. Date and time of sampling or inspection.

e. Identification of product and specifications section.

f. Location in the Project.

g. Type of test/inspection.

h. Date of test/inspection.

i. Results of test/inspection.

j. Conformance with Contract Documents.

k. When requested by Architect, provide interpretation of results.

2. Test report submittals are for Architect's knowledge as contract administrator for the limited purpose of assessing conformance with information given and the design concept expressed in the contract documents, or for Owner's information.

D. Certificates: When specified in individual specification sections, submit certification by the manufacturer and Contractor or installation/application subcontractor to Architect, in quantities specified for Product Data.

1. Indicate material or product conforms to or exceeds specified requirements. Submit supporting reference data, affidavits, and certifications as appropriate.

2. Certificates may be recent or previous test results on material or product, but must be acceptable to Architect.

E. Manufacturer's Instructions: When specified in individual specification sections, submit printed instructions for delivery, storage, assembly, installation, start-up, adjusting, and finishing, for the Owner's information. Indicate special procedures, perimeter conditions

requiring special attention, and special environmental criteria required for application or installation.

F. Manufacturer's Field Reports: Submit reports for Architect's benefit as contract administrator or for Owner.

1. Submit for information for the limited purpose of assessing conformance with information given and the design concept expressed in the contract documents.

G. Erection Drawings: Submit drawings for Architect's benefit as contract administrator or for Owner.

1. Submit for information for the limited purpose of assessing conformance with information given and the design concept expressed in the contract documents.

2. Data indicating inappropriate or unacceptable Work may be subject to action by Architect or Owner.

1.05 REFERENCES AND STANDARDS

A. For products and workmanship specified by reference to a document or documents not included in the Project Manual, also referred to as reference standards, comply with requirements of the standard, except when more rigid requirements are specified or are required by applicable codes.

B. Conform to reference standard of date of issue current on date of Contract Documents, except where a specific date is established by applicable code.

C. Obtain copies of standards where required by product specification sections.

D. Maintain copy at project site during submittals, planning, and progress of the specific work, until Substantial Completion.

E. Should specified reference standards conflict with Contract Documents, request clarification from Architect before proceeding.

F. Neither the contractual relationships, duties, or responsibilities of the parties in Contract nor those of Architect shall be altered from the Contract Documents by mention or inference otherwise in any reference document.

1.06 TESTING AND INSPECTION AGENCIES AND SERVICES

A. Owner will employ and pay for services of an independent testing agency to perform other specified testing.

B. Employment of agency in no way relieves Contractor of obligation to perform Work in accordance with requirements of Contract Documents.

PART 2 PRODUCTS - NOT USED

PART 3 EXECUTION

3.01 CONTROL OF INSTALLATION

A. Monitor quality control over suppliers, manufacturers, products, services, site conditions, and workmanship, to produce Work of specified quality.

B. Comply with manufacturers' instructions, including each step in sequence.

C. Should manufacturers' instructions conflict with Contract Documents, request clarification from Architect before proceeding.

D. Comply with specified standards as minimum quality for the Work except where more stringent tolerances, codes, or specified requirements indicate higher standards or more precise workmanship.

E. Have Work performed by persons qualified to produce required and specified quality.

F. Verify that field measurements are as indicated on shop drawings or as instructed by the manufacturer.

G. Secure products in place with positive anchorage devices designed and sized to withstand stresses, vibration, physical distortion, and disfigurement.

3.02 MOCK-UPS

A. Before installing portions of the Work where mock-ups are required, construct mock-ups in location and size indicated for each form of construction and finish required to comply with the following requirements, using materials indicated for the completed Work. The purpose of mock-up is to demonstrate the proposed range of aesthetic effects and workmanship.

B. Accepted mock-ups establish the standard of quality the Architect will use to judge the Work.

C. Integrated Exterior Mock-ups: construct integrated exterior mock-up as indicated on Drawings. Coordinate installation of exterior envelope materials and products as required in individual Specification Sections. Provide adequate supporting structure for mock-up materials as necessary.

D. Notify Architect, Owner Representative, and any pertitent owner third party consultants fifteen (15) working days in advance of dates and times when mockups will be constructed.

E. Provide supervisory personnel who will oversee mock-up construction. Provide workers that will be employed during the construction at Project.

F. Tests shall be performed under provisions identified in this section and identified in the respective product specification sections.

G. Assemble and erect specified items with specified attachment and anchorage devices, flashings, seals, and finishes.

H. Obtain Architect's approval of mock-ups before starting work, fabrication, or construction.

I. Once mock up is accepted it is the contractors responsibility to create a step photo representative of the steps and process in assembling the mock up. It will be the responsibility of the contractor to make sure that all personnel folllow the prescribed installation.

J. Accepted mock-ups shall be a comparison standard for the remaining Work.

K. Where mock-up has been accepted by Architect and is specified in product specification sections to be removed, protect mock-up throughout construction, remove mock-up and clear area when directed to do so by Architect.

L. Where possible salvage and recycle the demolished mock-up materials.

3.03 TOLERANCES

A. Monitor fabrication and installation tolerance control of products to produce acceptable Work. Do not permit tolerances to accumulate.

B. Comply with manufacturers' tolerances. Should manufacturers' tolerances conflict with Contract Documents, request clarification from Architect before proceeding.

C. Adjust products to appropriate dimensions; position before securing products in place.

3.04 TESTING AND INSPECTION

A. See individual specification sections and the current building code for testing and inspection required.

B. Testing Agency Duties:

1. Provide qualified personnel at site. Cooperate with Architect and Contractor in performance of services.

2. Perform specified sampling and testing of products in accordance with specified standards.

3. Ascertain compliance of materials and mixes with requirements of Contract Documents.

4. Promptly notify Architect and Contractor of observed irregularities or non-conformance of Work or products.

5. Perform additional tests and inspections required by Architect.

6. Submit reports of all tests/inspections specified.

C. Limits on Testing/Inspection Agency Authority:

1. Agency may not release, revoke, alter, or enlarge on requirements of Contract Documents.

2. Agency may not approve or accept any portion of the Work.

3. Agency may not assume any duties of Contractor.

4. Agency has no authority to stop the Work.

D. Contractor Responsibilities:

1. Deliver to agency at designated location, adequate samples of materials proposed to be used that require testing, along with proposed mix designs.

2. Cooperate with laboratory personnel, and provide access to the Work and to manufacturers' facilities.

3. Provide incidental labor and facilities:

a. To provide access to Work to be tested/inspected.

b. To obtain and handle samples at the site or at source of Products to be tested/inspected.

c. To facilitate tests/inspections.

d. To provide storage and curing of test samples.

4. Notify Architect and laboratory 24 hours prior to expected time for operations requiring testing/inspection services.

5. Employ services of an independent qualified testing laboratory and pay for additional samples, tests, and inspections required by Contractor beyond specified requirements.

6. Arrange with Owner's agency and pay for additional samples, tests, and inspections required by Contractor beyond specified requirements.

E. Re-testing required because of non-conformance to specified requirements shall be performed by the same agency on instructions by Architect.

F. Re-testing required because of non-conformance to specified requirements shall be paid for by Contractor. Payment for re testing will be charged to the Contractor by deducting testing charges from the Contract Price.

3.05 MANUFACTURERS' FIELD SERVICES

A. When specified in individual specification sections, require material or product suppliers or manufacturers to provide qualified staff personnel to observe site conditions, conditions of surfaces and installation, quality of workmanship, start-up of equipment, test, adjust and balance of equipment as applicable, and to initiate instructions when necessary.

B. Submit qualifications of observer to Architect 30 days in advance of required observations.

1. Observer subject to approval of Architect.

2. Observer subject to approval of Owner.

C. Report observations and site decisions or instructions given to applicators or installers that are supplemental or contrary to manufacturers' written instructions.

3.06 DEFECT ASSESSMENT

A. Replace Work or portions of the Work not conforming to specified requirements.

END OF SECTION

PART 1 GENERAL

1.01 SECTION INCLUDES

A. Temporary telecommunications services.

B. Temporary sanitary facilities.

C. Temporary Controls: Barriers, enclosures, and fencing.

D. Security requirements.

E. Vehicular access and parking.

F. Waste removal facilities and services.

G. Project identification sign.

H. Field offices.

1.02 RELATED REQUIREMENTS

A. Section 01 5100 - Temporary Utilities.

1.03 REFERENCE STANDARDS

A. ASTM E84 - Standard Test Method for Surface Burning Characteristics of Building Materials; 2015a.

1.04 TELECOMMUNICATIONS SERVICES

A. Provide, maintain, and pay for telecommunications services to field office at time of project mobilization.

B. Telecommunications services shall include:

1. Windows-based personal computer dedicated to project telecommunications, with necessary software and laser printer.

2. ~~Telephone Land Lines: One line, minimum; one handset per line.~~

   a. Cell phone service with voice mail for the project superintendent is an acceptable alternative to a fixed telephone device for this project.

3. Internet Connections: Minimum of one; DSL modem or faster. Wireless connection in trailer for the Architect, Owners Representative, and other owner consultants.

4. Email: Account/address reserved for project use.

5. ~~Facsimile Service: Minimum of one dedicated fax machine/printer, with dedicated phone line.~~

a. ~~This service may reside at the Contractor's office for this project if someone in the office can regularly check the device for messages.~~

C. Provide a digital camera at the site capable of taking pictures of job conditions and sending.jpg images via e-mail to Owner and Architect.

1.05 TEMPORARY SANITARY FACILITIES

A. Provide and maintain required facilities and enclosures. Provide at time of project mobilization.

B. Maintain daily in clean and sanitary condition.

1.06 BARRIERS

A. Provide barriers to protect workers on the site and the public against injury.

B. Provide barriers to prevent unauthorized entry to construction areas, to prevent access to areas that could be hazardous to workers or the public, to allow for owner's use of site and to protect existing facilities and adjacent properties from damage from construction operations and demolition.

C. Provide barricades and covered walkways required by governing authorities for public rights-of-way and for public access to existing building.

D. Provide protection for plants designated to remain. Replace damaged plants.

E. Protect non-owned vehicular traffic, stored materials, site, and structures from damage.

F. Traffic Controls: Provide as required to maintain safe working environment for Owner and Contractor personnel using the site.

1.07 TEMPORARY FIRE PROTECTION

A. Provide and maintain necessary facilities and equipment to safeguard Project against Fire Damage.

1.08 FENCING

A. Provide 6 foot high fence around construction site; equip with vehicular and pedestrian gates with locks.

1.09 EXTERIOR ENCLOSURES

A. Provide temporary insulated weather tight closure of exterior openings to accommodate acceptable working conditions and protection for Products, to allow for temporary heating and maintenance of required ambient temperatures identified in individual specification sections, and to prevent entry of unauthorized persons. Provide access doors with self-closing hardware and locks.

1.10 INTERIOR ENCLOSURES

A. Provide temporary partitions and ceilings as indicated to separate work areas from Owner-occupied areas, to prevent penetration of dust and moisture into Owner-occupied areas, and to prevent damage to existing materials and equipment.

B. Construction: Framing and reinforced polyethylene sheet materials with closed joints and sealed edges at intersections with existing surfaces:

1. Maximum flame spread rating of 75 in accordance with ASTM E84.

1.11 SECURITY

A. Provide security and facilities to protect Work, existing facilities, and Owner's operations from unauthorized entry, vandalism, or theft.

B. Coordinate with Owner's security program.

1.12 VEHICULAR ACCESS AND PARKING

A. Comply with regulations relating to use of streets and sidewalks, access to emergency facilities, and access for emergency vehicles.

B. Coordinate access and haul routes with governing authorities and Owner.

C. Provide and maintain access to fire hydrants, free of obstructions.

D. Provide means of removing mud from vehicle wheels before entering streets.

E. Designated existing on-site roads may be used for construction traffic.

F. Provide temporary parking areas to accommodate construction personnel. When site space is not adequate, provide additional off-site parking.

G. Existing parking areas may be used for construction parking.

H. Do not allow vehicle parking on existing pavement.

I. Use designated drop off and delivery areas for short term parking only.

J. Do not use Owner's Parking Lots for overnight vehicle storage.

K. Designate one parking space for Owner and Architect use.

L. Repair existing facilities damaged by use, to original condition.

M. Provide trained and equipped flag persons to regulate traffic when construction operations or traffic encroach on public traffic lanes.

1.13 MATERIAL STORAGE SPACE

A. Maintain within Project Limits in accordance with Architect's and Owner's instructions. Do not block exitways or overload structure.

1.14 WASTE REMOVAL

A. See Section 01 7419 - Construction Waste Management and Disposal, for additional requirements.

B. Encourage the separation of waste materials and sorting and disposal at a local recycling center.

C. Provide waste removal facilities and services as required to maintain the site in clean and orderly condition.

D. Provide containers with lids. Remove trash from site periodically.

E. If materials to be recycled or re-used on the project must be stored on-site, provide suitable non-combustible containers; locate containers holding flammable material outside the structure unless otherwise approved by the authorities having jurisdiction.

F. Open free-fall chutes are not permitted. Terminate closed chutes into appropriate containers with lids.

1.15 PROJECT IDENTIFICATION

A. A project sign is not required for this project.

B. No other signs are allowed without Owner permission except those required by law.

1.16 ~~FIELD OFFICES~~

~~A. Office: Weathertight, with lighting, electrical outlets, heating, cooling equipment, and equipped with sturdy furniture and storage space for drawings and all project documents.~~

~~B. Provide space for Project meetings, with table and chairs to accommodate 8 persons.~~

~~C. Provide office within 15 days from Notice to Proceed, maintain, and remove prior to Substantial Completion or as agreed by Owner.~~

~~D. Contractor shall provide a field office, minimum 8'x20' for Owners Rep: Weathertight, with lighting, electrical outlets, internet, heating, cooling equipment, and equipped with sturdy furniture and storage space for drawings and all project documents. Provide separate keyed lock.~~

~~1. Provide space for Project meetings, with table and chairs to accommodate 8 persons.~~

~~2. Provide office within 15 days from Notice to Proceed, maintain, and remove prior to Substantial Completion or as agreed by Owner.~~

~~3. Provide Utilities: power and internet.~~

1.17 VISITOR PERSONAL PROTECTION EQUIPMENT

A. Provide six sets of Personal Protection Equipment (PPE) for use by official visitors to the project site during construction. Visitor PPE shall include as a minimum, hard hat and

protective eye goggles. Provide high visibility garments when moving vehicles are in use on the construction site. Store in Field Office and reserve for use by visitors to the project site.

B. Maintain in good condition through the course of the project and replace equipment that does not meet personal safety requirements.

1.18 REMOVAL OF UTILITIES, FACILITIES, AND CONTROLS

A. Remove temporary utilities, equipment, facilities, materials, prior to Date of Substantial Completion inspection.

B. Remove underground installations to a minimum depth of 2 feet. Grade site as indicated.

C. Clean and repair damage caused by installation or use of temporary work.

D. Restore existing facilities used during construction to original condition.

E. Restore new permanent facilities used during construction to specified condition.

PART 2 PRODUCTS - NOT USED

PART 3 EXECUTION - NOT USED

END OF SECTION

PART 1 GENERAL

1.01 SECTION INCLUDES

A. Temporary Utilities: Electricity, lighting, heat, ventilation, and water.

1.02 RELATED REQUIREMENTS

A. Section 01 5000 - Temporary Facilities and Controls:

1. Temporary telecommunications services for administrative purposes.

2. Temporary sanitary facilities required by law.

1.03 CONSERVATION

A. It is the Owner's practice to utilize natural resources responsibly. Exercise appropriate energy and water conservation measures at all times.

1.04 TEMPORARY ELECTRICITY

A. Cost of Labor, Material and Energy: By Contractor.

B. Provide power service required from utility source.

C. Provide power outlets for construction operations, with branch wiring and distribution boxes located at each floor. Provide flexible power cords as required.

D. Provide main service disconnect and over-current protection at convenient location and meter.

E. Permanent convenience receptacles may be utilized during construction.

F. Provide adequate distribution equipment, wiring, and outlets to provide single phase branch circuits for power and lighting.

1.05 TEMPORARY LIGHTING FOR CONSTRUCTION PURPOSES

A. Provide and maintain incandescent lighting for construction operations to achieve a minimum lighting level of 2 watt/sq ft.

B. Provide and maintain 1 watt/sq ft lighting to exterior staging and storage areas after dark for security purposes.

C. Provide and maintain 0.25 watt/sq ft H.I.D. lighting to interior work areas after dark for security purposes.

D. Provide branch wiring from power source to distribution boxes with lighting conductors, pigtails, and lamps as required.

E. Maintain lighting and provide routine repairs.

F. Permanent building lighting may be utilized during construction.

1.06 TEMPORARY HEATING

A. Cost of of Labor, Material and Energy: By Contractor.

B. Provide heating devices and heat as needed to maintain specified conditions for construction operations.

C. Maintain minimum ambient temperature of 50 degrees F in areas where construction is in progress, unless indicated otherwise in specifications.

1.07 TEMPORARY COOLING

A. Provide cooling devices and cooling as needed to maintain specified conditions for construction operations.

B. Maintain maximum ambient temperature of 80 degrees F in areas where construction is in progress, unless indicated otherwise in specifications.

1.08 TEMPORARY VENTILATION

A. Existing ventilation equipment may not be used.

1.09 TEMPORARY WATER SERVICE

A. Cost of Labor, Materials, and Water Used: By Contractor.

B. Provide and maintain suitable quality water service for construction operations at time of project mobilization.

C. Connect to existing water source.

1. Exercise measures to conserve water.

D. Extend branch piping with outlets located so water is available by hoses with threaded connections. Provide temporary pipe insulation to prevent freezing.

PART 2 PRODUCTS - NOT USED

PART 3 EXECUTION – NOT USED

END OF SECTION

PART 1 GENERAL

1.01 SECTION INCLUDES

A. Prevention of erosion due to construction activities.

B. Prevention of sedimentation of waterways, open drainage ways, and storm and sanitary sewers due to construction activities.

C. Restoration of areas eroded due to insufficient preventive measures.

D. Compensation of Owner for fines levied by authorities having jurisdiction due to non-compliance by Contractor.

1.02 REFERENCE STANDARDS

A. ASTM D4355 - Standard Test Method for Deterioration of Geotextiles by Exposure to Light, Moisture, and Heat in a Xenon Arc Type Apparatus; 2007.

B. ASTM D4491 - Standard Test Methods for Water Permeability of Geotextiles by Permittivity; 1999a (Reapproved 2014).

C. ASTM D4533 - Standard Test Method for Trapezoid Tearing Strength of Geotextiles; 2011.

D. ASTM D4632/D4632M - Standard Test Method for Grab Breaking Load and Elongation of Geotextiles; 2015a.

E. ASTM D4751 - Standard Test Method for Determining Apparent Opening Size of a Geotextile; 2012.

F. ASTM D4873 - Standard Guide for Identification, Storage, and Handling of Geosynthetic Rolls and Samples; 2002 (Reapproved 2009).

1.03 PERFORMANCE REQUIREMENTS

A. Comply with all requirements of state and local jurisdictions for erosion and sedimentation control.

B. Develop and follow an Erosion and Sedimentation Prevention Plan and submit periodic inspection reports.

C. Do not begin clearing, grading, or other work involving disturbance of ground surface cover until applicable permits have been obtained; furnish all documentation required to obtain applicable permits.

1. An erosion control permit is required. The Owner shall apply, pay for, and secure the permit. The contractor shall comply with the construction erosion control permit.

2. Owner will withhold payment to Contractor equivalent to all fines resulting from non-compliance with applicable regulations.

D. Timing: Put preventive measures in place as soon as possible after disturbance of surface cover and before precipitation occurs.

E. Storm Water Runoff: Control increased storm water runoff due to disturbance of surface cover due to construction activities for this project.

1. Prevent runoff into storm and sanitary sewer systems, including open drainage channels, in excess of actual capacity or amount allowed by authorities having jurisdiction, whichever is less.

2. Anticipate runoff volume due to the most extreme short term and 24-hour rainfall events that might occur in 25 years.

F. Erosion On Site: Minimize wind, water, and vehicular erosion of soil on project site due to construction activities for this project.

1. Control movement of sediment and soil from temporary stockpiles of soil.

2. Prevent development of ruts due to equipment and vehicular traffic.

3. If erosion occurs due to non-compliance with these requirements, restore eroded areas at no cost to Owner.

G. Erosion Off Site: Prevent erosion of soil and deposition of sediment on other properties caused by water leaving the project site due to construction activities for this project.

1. Prevent windblown soil from leaving the project site.

2. Prevent tracking of mud onto public roads outside site.

3. Prevent mud and sediment from flowing onto sidewalks and pavements.

4. If erosion occurs due to non-compliance with these requirements, restore eroded areas at no cost to Owner.

H. Sedimentation of Waterways On Site: Prevent sedimentation of waterways on the project site, including rivers, streams, lakes, ponds, open drainage ways, storm sewers, and sanitary sewers.

1. If sedimentation occurs, install or correct preventive measures immediately at no cost to Owner; remove deposited sediments; comply with requirements of authorities having jurisdiction.

2. If sediment basins are used as temporary preventive measures, pump dry and remove deposited sediment after each storm.

I. Sedimentation of Waterways Off Site: Prevent sedimentation of waterways off the project site, including rivers, streams, lakes, ponds, open drainage ways, storm sewers, and sanitary sewers.

1. If sedimentation occurs, install or correct preventive measures immediately at no cost to Owner; remove deposited sediments; comply with requirements of authorities having jurisdiction.

J. Open Water: Prevent standing water that could become stagnant.

K. Maintenance: Maintain temporary preventive measures until permanent measures have been established.

1.04 WORK INCLUDED BUT SPECIFIED ELSEWHERE

A. Erosion control products and construction work within any jurisdictional right-of-way shall conform to the requirments of that jurisdiction, in addition to the requirements herein and those shown on the private improvement drawings.

B. Erosion control products and construction work within the any jurisdictional right-of-way shall conform to the requirments of that jurisdiction, 1990 Standard Specifications for Public Works Construction published by the Oregon Chapter of APWA (Amended in 1996) and to the requirements herein and those shown on the private improvement drawings.

1.05 SUBMITTALS

A. See Section 01 3000 - Administrative Requirements, for submittal procedures.

B. Erosion and Sedimentation Control Plan:

1. Submit within 2 weeks after Notice to Proceed.

2. Include:

a. Site plan identifying soils and vegetation, existing erosion problems, and areas vulnerable to erosion due to topography, soils, vegetation, or drainage.

b. Site plan showing grading; new improvements; temporary roads, traffic accesses, and other temporary construction; and proposed preventive measures.

c. Where extensive areas of soil will be disturbed, include storm water flow and volume calculations, soil loss predictions, and proposed preventive measures.

d. Schedule of temporary preventive measures, in relation to ground disturbing activities.

e. Other information required by law.

f. Format required by law is acceptable, provided any additional information specified is also included.

3. Obtain the approval of the Plan by authorities having jurisdiction.

4. Obtain the approval of the Plan by Owner.

C. Certificate: Mill certificate for silt fence fabric attesting that fabric and factory seams comply with specified requirements, signed by legally authorized official of manufacturer; indicate actual minimum average roll values; identify fabric by roll identification numbers.

D. Inspection Reports: Submit report of each inspection; identify each preventive measure, indicate condition, and specify maintenance or repair required and accomplished.

PART 2 PRODUCTS

2.01 MATERIALS

A. Mulch: Use one of the following:

1. Straw or hay.
2. Wood waste, chips, or bark.
3. Erosion control matting or netting.
4. Polyethylene film, where specifically indicated only.

B. Grass Seed For Temporary Cover: Select a species appropriate to climate, planting season, and intended purpose. If same area will later be planted with permanent vegetation, do not use species known to be excessively competitive or prone to volunteer in subsequent seasons.

C. Bales: Air dry, rectangular straw bales.

1. Cross Section: 14 by 18 inches, minimum.
2. Bindings: Wire or string, around long dimension.

D. Bale Stakes: One of the following, minimum 3 feet long:

1. Steel U- or T-section, with minimum mass of 1.33 lb per linear foot.
2. Wood, 2 by 2 inches in cross section.

E. Silt Fence Fabric: Polypropylene geotextile resistant to common soil chemicals, mildew, and insects; non-biodegradable; in longest lengths possible; fabric including seams with the following minimum average roll lengths:

1. Average Opening Size: 30 U.S. Std. Sieve, maximum, when tested in accordance with ASTM D4751.
2. Permittivity: 0.05 sec^-1, minimum, when tested in accordance with ASTM D4491.
3. Ultraviolet Resistance: Retaining at least 70 percent of tensile strength, when tested in accordance with ASTM D4355 after 500 hours exposure.
4. Tensile Strength: 100 lb-f, minimum, in cross-machine direction; 124 lb-f, minimum, in machine direction; when tested in accordance with ASTM D4632/D4632M.
5. Elongation: 15 to 30 percent, when tested in accordance with ASTM D4632/D4632M.
6. Tear Strength: 55 lb-f, minimum, when tested in accordance with ASTM D4533.

7. Color: Manufacturer's standard, with embedment and fastener lines preprinted.

F. Silt Fence Posts: One of the following, minimum 5 feet long:

1. Softwood, 4 by 4 inches in cross section.

G. Gravel: See Section 32 1123 for aggregate.

PART 3 EXECUTION

3.01 EXAMINATION

A. Examine site and identify existing features that contribute to erosion resistance; maintain such existing features to greatest extent possible.

3.02 PREPARATION

A. Schedule work so that soil surfaces are left exposed for the minimum amount of time.

3.03 SCOPE OF PREVENTIVE MEASURES

A. In all cases, if permanent erosion resistant measures have been installed temporary preventive measures are not required.

B. Construction Entrances: Traffic-bearing aggregate surface.

1. Width: As required; 20 feet, minimum.

2. Length: 50 feet, minimum.

3. Provide at each construction entrance from public right-of-way and where noted on drawings.

4. Where necessary to prevent tracking of mud onto right-of-way, provide wheel washing area out of direct traffic lane, with drain into sediment trap or basin.

C. Linear Sediment Barriers: Made of silt fences.

1. Provide linear sediment barriers:

a. Along downhill perimeter edge of disturbed areas, including soil stockpiles.

2. Space sediment barriers with the following maximum slope length upslope from barrier:

a. Slope of Less Than 2 Percent: 100 feet..

b. Slope Between 2 and 5 Percent: 75 feet.

c. Slope Between 5 and 10 Percent: 50 feet.

d. Slope Between 10 and 20 Percent: 25 feet.

e. Slope Over 20 Percent: 15 feet.

D. Storm Drain Curb Inlet Sediment Trap: Protect each curb inlet using one of the following measures:

1. Filter fabric wrapped around hollow concrete blocks blocking entire inlet face area; use one piece of fabric wrapped at least 1-1/2 times around concrete blocks and secured to prevent dislodging; orient cores of blocks so runoff passes into inlet.

2. Straw bale row blocking entire inlet face area; anchor into pavement.

E. Storm Drain Drop Inlet Sediment Traps: As detailed on drawings.

F. Temporary Splash Pads: Stone aggregate over filter fabric; size to suit application; provide at downspout outlets and storm water outlets.

G. Soil Stockpiles: Protect using one of the following measures:

1. Cover with polyethylene film, secured by placing soil on outer edges.

2. Cover with mulch at least 4 inches thickness of pine needles, sawdust, bark, wood chips, or shredded leaves, or 6 inches of straw or hay.

H. Mulching: Use only for areas that may be subjected to erosion for less than 6 months.

1. Wood Waste: Use only on slopes 3:1 or flatter; no anchoring required.

I. Temporary Seeding: Use where temporary vegetated cover is required.

3.04 INSTALLATION

A. Traffic-Bearing Aggregate Surface:

1. Excavate minimum of 6 inches.

2. Place geotextile fabric full width and length, with minimum 12 inch overlap at joints.

3. Place and compact at least 6 inches of 1.5 to 3.5 inch diameter stone.

B. Silt Fences:

1. Store and handle fabric in accordance with ASTM D4873.

2. Where slope gradient is less than 3:1 or barriers will be in place less than 6 months, use nominal 16 inch high barriers with minimum 36 inch long posts spaced at 6 feet maximum, with fabric embedded at least 4 inches in ground.

3. Where slope gradient is steeper than 3:1 or barriers will be in place over 6 months, use nominal 28 inch high barriers, minimum 48 inch long posts spaced at 6 feet maximum, with fabric embedded at least 6 inches in ground.

4. Where slope gradient is steeper than 3:1 and vertical height of slope between barriers is more than 20 feet, use nominal 32 inch high barriers with woven wire reinforcement and steel posts spaced at 4 feet maximum, with fabric embedded at least 6 inches in ground.

5. Install with top of fabric at nominal height and embedment as specified.

6. Do not splice fabric width; minimize splices in fabric length; splice at post only, overlapping at least 18 inches, with extra post.

7. Fasten fabric to wood posts using one of the following:

   a. Four nails per post with 3/4 inch diameter flat or button head, 1 inch long, and 14 gage, 0.083 inch shank diameter.

   b. Five staples per post with at least 17 gage, 0.0453 inch wire, 3/4 inch crown width and 1/2 inch long legs.

8. Wherever runoff will flow around end of barrier or over the top, provide temporary splash pad or other outlet protection; at such outlets in the run of the barrier, make barrier not more than 12 inches high with post spacing not more than 4 feet.

C. Straw Bale Rows:

1. Install bales in continuous rows with ends butting tightly, with one bale at each end of row turned uphill.

2. Install bales so that bindings are not in contact with the ground.

3. Embed bales at least 4 inches in the ground.

4. Anchor bales with at least two stakes per bale, driven at least 18 inches into the ground; drive first stake in each bale toward the previously placed bale to force bales together.

5. Fill gaps between ends of bales with loose straw wedged tightly.

6. Place soil excavated for trench against bales on the upslope side of the row, compacted.

D. Mulching Over Large Areas:

1. Dry Straw and Hay: Apply 2-1/2 tons per acre; anchor using dull disc harrow or emulsified asphalt applied using same spraying machine at 100 gallons of water per ton of mulch.

2. Wood Waste: Apply 6 to 9 tons per acre.

3. Erosion Control Matting: Comply with manufacturer's instructions.

E. Mulching Over Small and Medium Areas:

1. Dry Straw and Hay: Apply 4 to 6 inches depth.

2. Wood Waste: Apply 2 to 3inches depth.

3. Erosion Control Matting: Comply with manufacturer's instructions.

F. Temporary Seeding:

1. When hydraulic seeder is used, seedbed preparation is not required.

2. When surface soil has been sealed by rainfall or consists of smooth undisturbed cut slopes, and conventional or manual seeding is to be used, prepare seedbed by scarifying sufficiently to allow seed to lodge and germinate.

3. If temporary mulching was used on planting area but not removed, apply nitrogen fertilizer at 1 pound per 1000 sq ft.

4. On soils of very low fertility, apply 10-10-10 fertilizer at rate of 12 to 16 pounds per 1000 sq ft.

5. Incorporate fertilizer into soil before seeding.

6. Apply seed uniformly; if using drill or cultipacker seeders place seed 1/2 to 1 inch deep.

7. Irrigate as required to thoroughly wet soil to depth that will ensure germination, without causing runoff or erosion.

8. Repeat irrigation as required until grass is established.

3.05 MAINTENANCE

A. Inspect preventive measures weekly, within 24 hours after the end of any storm that produces 0.5 inches or more rainfall at the project site, and daily during prolonged rainfall.

B. Repair deficiencies immediately.

C. Silt Fences:

1. Promptly replace fabric that deteriorates unless need for fence has passed.

2. Remove silt deposits that exceed one-third of the height of the fence.

3. Repair fences that are undercut by runoff or otherwise damaged, whether by runoff or other causes.

D. Straw Bale Rows:

1. Promptly replace bales that fall apart or otherwise deteriorate unless need has passed.

2. Remove silt deposits that exceed one-half of the height of the bales.

3. Repair bale rows that are undercut by runoff or otherwise damaged, whether by runoff or other causes.

E. Clean out temporary sediment control structures weekly and relocate soil on site.

F. Place sediment in appropriate locations on site; do not remove from site.

3.06 CLEAN UP

A. Remove temporary measures after permanent measures have been installed, unless permitted to remain by Architect.

B. Clean out temporary sediment control structures that are to remain as permanent measures.

C. Where removal of temporary measures would leave exposed soil, shape surface to an acceptable grade and finish to match adjacent ground surfaces.

END OF SECTION

PART 1 GENERAL

1.01 SECTION INCLUDES

A. Construction procedures to promote adequate indoor air quality after construction.

B. Building flush-out after construction and before occupancy.

C. Testing indoor air quality after completion of construction.

1.02 PROJECT GOALS

A. Dust and Airborne Particulates: Prevent deposition of dust and other particulates in HVAC ducts and equipment.

1. Cleaning of ductwork is not contemplated under this Contract.

2. Contractor shall bear the cost of cleaning required due to failure to protect ducts and equipment from construction dust.

B. Airborne Contaminants: Procedures and products have been specified to minimize indoor air pollutants.

1. Furnish products meeting the specifications.

2. Avoid construction practices that could result in contamination of installed products leading to indoor air pollution.

1.03 RELATED REQUIREMENTS

A. Section 01 4000 - Quality Requirements: Testing and inspection services.

B. Section 01 6116 - Volatile Organic Compound (VOC) Content Restrictions.

1.04 REFERENCE STANDARDS

A. ASTM D5197 - Standard Test Method for Determination of Formaldehyde and Other Carbonyl Compounds in Air (Active Sampler Methodology); 2009.

B. CAL (CDPH SM) - Standard Method for the Testing and Evaluation of Volatile Organic Chemical Emissions From Indoor Sources Using Environmental Chambers; California Department of Public Health; v1.1, 2010.

C. EPA 600/4-90/010 - Compendium of Methods for the Determination of Air Pollutants in Indoor Air; April 1990.

D. EPA 625/R-96/010b - Compendium of Methods for the Determination of Toxic Organic Compounds in Ambient Air; January 1999.

E. SMACNA (OCC) - IAQ Guidelines for Occupied Buildings Under Construction; 2007.

1.05 DEFINITIONS

A. Adsorptive Materials: Gypsum board, acoustical ceiling tile and panels, carpet and carpet tile, fabrics, fibrous insulation, and other similar products.

B. Contaminants: Gases, vapors, regulated pollutants, airborne mold and mildew, and the like, as specified.

C. Particulates: Dust, dirt, and other airborne solid matter.

D. Wet Work: Concrete, plaster, coatings, and other products that emit water vapor or volatile organic compounds during installation, drying, or curing.

1.06 SUBMITTALS

A. See Section 01 3000 - Administrative Requirements, for submittal procedures.

B. Indoor Air Quality Management Plan: Describe in detail measures to be taken to promote adequate indoor air quality upon completion; use SMACNA (OCC) as a guide.

1. Submit not less than 60 days before enclosure of building.
2. Identify potential sources of odor and dust.
3. Identify construction activities likely to produce odor or dust.
4. Identify areas of project potentially affected, especially occupied areas.
5. Evaluate potential problems by severity and describe methods of control.
6. Describe construction ventilation to be provided, including type and duration of ventilation, use of permanent HVAC systems, types of filters and schedule for replacement of filters.
7. Describe cleaning and dust control procedures.

C. Air Contaminant Test Plan: Identify:

1. Testing agency qualifications.
2. Locations and scheduling of air sampling.
3. Test procedures, in detail.
4. Test instruments and apparatus.
5. Sampling methods.

D. Air Contaminant Test Reports: Show:

1. Location where each sample was taken, and time.
2. Test values for each air sample; average the values of each set of 3.
3. HVAC operating conditions.
4. Certification of test equipment calibration.
5. Other conditions or discrepancies that might have influenced results.

PART 2 PRODUCTS

2.01 MATERIALS

A. Low VOC Materials: See Section 01 6116.

B. Low VOC Materials: See individual sections for specific requirements for materials with low VOC content.

PART 3 EXECUTION

3.01 CONSTRUCTION PROCEDURES

A. Prevent the absorption of moisture and humidity by adsorptive materials by:

1. Sequencing the delivery of such materials so that they are not present in the building until wet work is completed and dry.

2. Delivery and storage of such materials in fully sealed moisture-impermeable packaging.

3. Provide sufficient ventilation for drying within reasonable time frame.

B. Begin construction ventilation when building is substantially enclosed.

C. If extremely dusty or dirty work must be conducted inside the building, shut down HVAC systems for the duration; remove dust and dirt completely before restarting systems.

D. HVAC equipment and ductwork may **NOT** be used for ventilation during construction:

1. Provide temporary ventilation equivalent to 1.5 air changes per hour, minimum.

2. Exhaust directly to outside.

3. Seal HVAC air inlets and outlets immediately after duct installation.

E. Do not store construction materials or waste in mechanical or electrical rooms.

F. Prior to use of return air ductwork without intake filters clean up and remove dust and debris generated by construction activities.

1. Inspect duct intakes, return air grilles, and terminal units for dust.

2. Clean plenum spaces, including top sides of lay-in ceilings, outsides of ducts, tops of pipes and conduit.

3. Clean tops of doors and frames.

4. Clean mechanical and electrical rooms, including tops of pipes, ducts, and conduit, equipment, and supports.

5. Clean return plenums of air handling units.

6. Remove intake filters last, after cleaning is complete.

G. Do not perform dusty or dirty work after starting use of return air ducts without intake filters.

H. Use other relevant recommendations of SMACNA (OCC) for avoiding unnecessary contamination due to construction procedures.

3.02 BUILDING FLUSH-OUT

A. Contractor's Option: Either full continuous flush-out OR satisfactory air contaminant testing is required, not both.

B. Perform building flush-out before occupancy.

C. Do not start flush-out until:

1. All construction is complete.

2. HVAC systems have been tested, adjusted, and balanced for proper operation.

3. Inspection of inside of return air ducts and terminal units confirms that cleaning is not necessary.

4. New HVAC filtration media have been installed.

D. Building Flush-Out: Operate all ventilation systems at normal flow rates with 100 percent outside air until a total air volume of 14,000 cubic feet per square foot of floor area has been supplied.

1. Obtain Owner's concurrence that construction is complete enough before beginning flush-out.

2. Maintain interior temperature of at least 60 degrees F and interior relative humidity no higher than 60 percent.

3. If additional construction involving materials that produce particulates or any of the specified contaminants is conducted during flush-out, start flush-out over.

4. If interior spaces must be occupied prior to completion of the flush-out, supply a minimum of 25 percent of the total air volume prior to occupancy, and:

a. Begin ventilation at least three hours prior to daily occupancy.

b. Continue ventilation during all occupied periods.

c. Provide minimum outside air volume of 0.30 cfm per square foot or design minimum outside air rate, whichever is greater.

E. Install new HVAC filtration media after completion of flush-out and before occupancy or further testing.

3.03 AIR CONTAMINANT TESTING

A. Contractor's Option: Either full continuous flush-out OR satisfactory air contaminant testing is required, not both.

B. Perform air contaminant testing before occupancy.

C. Do not start air contaminant testing until:

1. All construction is complete, including interior finishes.

2. HVAC systems have been tested, adjusted, and balanced for proper operation.

3. New HVAC filtration media have been installed.

D. Indoor Air Samples: Collect from spaces representative of occupied areas:

1. Collect samples while operable windows and exterior doors are closed, HVAC system is running normally as if occupied, with design minimum outdoor air, but with the building unoccupied.

2. Collect samples from spaces in each contiguous floor area in each air handler zone, but not less than one sample per 25,000 square feet; take samples from areas having the least ventilation and those having the greatest presumed source strength.

3. Collect samples from height from 36 inches to 72 inches above floor.

4. Collect samples from same locations on 3 consecutive days during normal business hours; average the results of each set of 3 samples.

5. Exception: Areas with normal very high outside air ventilation rates, such as laboratories, do not need to be tested.

6. When retesting the same building areas, take samples from at least the same locations as in first test.

E. Outdoor Air Samples: Collect samples at outside air intake of each air handler at the same time as indoor samples are taken.

F. Analyze air samples and submit report.

G. Air Contaminant Concentration Limits:

1. Formaldehyde: Not more than 27 parts per billion.

2. PM10 Particulates: Not more than 50 micrograms per cubic meter.

3. Total Volatile Organic Compounds (TVOCs): Not more than 500 micrograms per cubic meter.

4. Chemicals Listed in CAL (CDPH SM) Table 4-1, except Formaldehyde: Allowable concentrations listed in Table 4-1.

5. Carbon Monoxide: Not more than 9 parts per million and not more than 2 parts per million higher than outdoor air.

H. Air Contaminant Concentration Test Methods:

1. Formaldehyde: ASTM D5197, EPA 625 Method TO-11A, or EPA 600 Method IP-6.

2. Particulates: EPA 600 Method IP-10.

3. Total Volatile Organic Compounds (TVOC): EPA 625 Method TO-1, TO-15, or TO-17; or EPA 600 Method IP-1.

4. Chemicals Listed in CAL (CDPH SM) Table 4-1, except Formaldehyde: ASTM D5197, or EPA 625 Method TO-1, TO-15, or TO-17.

5. Carbon Monoxide: EPA 600 Method IP-3, plus measure outdoor air; measure in ppm; report both indoor and outdoor measurements.

I. Air Contaminant Concentration Determination and Limits:

1. Carbon Monoxide: Not more than 9 parts per million and not more than 2 parts per million higher than outdoor air.

2. Airborne Mold and Mildew: Measure in relation to outside air; not higher than outside air.

3. Formaldehyde: Not more than 50 parts per billion.

4. Formaldehyde: Measure in micrograms per cubic meter, in relation to outside air; not more than 20 micrograms per cubic meter higher than outside air.

5. Total Volatile Organic Compounds (TVOC): Not more than 500 micrograms per cubic meter.

6. Total Volatile Organic Compounds (TVOC): Measure in micrograms per cubic meter, in relation to outside air; not more than 200 micrograms per cubic meter higher than outside air.

7. Particulates (PM10): Not more than 50 micrograms per cubic meter.

8. Total Particulates (PM): Measure in micrograms per cubic meter, in relation to outside air; not more than 20 micrograms per cubic meter higher than outside air.

END OF SECTION

PART 1 GENERAL

1.01 SECTION INCLUDES

A. General product requirements.

B. Re-use of existing products.

C. Transportation, handling, storage and protection.

D. Product option requirements.

E. Substitution limitations and procedures.

F. Procedures for Owner-supplied products.

G. Maintenance materials, including extra materials, spare parts, tools, and software.

1.02 RELATED REQUIREMENTS

A. Document 00 2113 - Instructions to Bidders: Product options and substitution procedures prior to bid date.

B. Section 01 4000 - Quality Requirements: Product quality monitoring.

C. Section 01 6023 - Substitution Request Form

D. Section 01 6116 - Volatile Organic Compound (VOC) Content Restrictions: Requirements for VOC-restricted product categories.

E. Section 01 7419 - Construction Waste Management and Disposal: Waste disposal requirements potentially affecting packaging and substitutions.

1.03 REFERENCE STANDARDS

A. GEI (SCH) - GREENGUARD "Children and Schools" Certified Products; GREENGUARD Environmental Institute; current listings at www.greenguard.org.

B. GreenSeal GS-36 - Commercial Adhesives; Green Seal, Inc.; 2000.

C. SCAQMD 1168 - South Coast Air Quality Management District Rule No.1168; current edition; www.aqmd.gov.

1.04 SUBMITTALS

A. Proposed Products List: Submit list of major products that comply with the specifications and are proposed for use, with name of manufacturer, trade name, and model number of each product.

1. Submit within 15 days after date of Subcontract Award Notice.

2. For products specified only by reference standards, list applicable reference standards.

B. Product Data Submittals: Submit manufacturer's standard published data. Mark each copy to identify applicable products, models, options, and other data. Supplement manufacturers' standard data to provide information specific to this Project.

C. Shop Drawing Submittals: Prepared specifically for this Project; indicate utility and electrical characteristics, utility connection requirements, and location of utility outlets for service for functional equipment and appliances.

D. Sample Submittals: Illustrate functional and aesthetic characteristics of the product, with integral parts and attachment devices. Coordinate sample submittals for interfacing work.

1. For selection from standard finishes, submit samples of the full range of the manufacturer's standard colors, textures, and patterns.

PART 2 PRODUCTS

2.01 EXISTING PRODUCTS

A. Do not use materials and equipment removed from existing premises unless specifically required or permitted by the Contract Documents.

B. Unforeseen historic items encountered remain the property of the Owner; notify Owner promptly upon discovery; protect, remove, handle, and store as directed by Owner.

C. Existing materials and equipment indicated to be removed, but not to be re-used, relocated, reinstalled, delivered to the Owner, or otherwise indicated as to remain the property of the Owner, become the property of the Contractor; remove from site.

D. Reused Products: Reused products include materials and equipment previously used in this or other construction, salvaged and refurbished as specified.

2.02 NEW PRODUCTS

A. Provide new products unless specifically required or permitted by the Contract Documents.

2.03 PRODUCT OPTIONS

A. Products Specified by Reference Standards or by Description Only: Use any product meeting those standards or description.

B. Products Specified by Naming One or More Manufacturers: Use a product of one of the manufacturers named and meeting specifications, no options or substitutions allowed.

C. Products Specified by Naming One or More Manufacturers with a Provision for Substitutions: Submit a request for substitution for any manufacturer not named.

2.04 MAINTENANCE MATERIALS

A. Furnish extra materials, spare parts, tools, and software of types and in quantities specified in individual specification sections.

PART 3 EXECUTION

3.01 SUBSTITUTION PROCEDURES

A. Instructions to Bidders specifies process and time restrictions for submitting requests for substitutions during the bidding period. Comply with requirements specified in that section.

B. Substitutions may be considered when a product becomes unavailable through no fault of the Contractor.

C. Document each request on Form 01-6023 with complete data substantiating compliance of proposed substitution with Contract Documents. Include a point-by-point comparative analysis in matrix form.

D. Substitutions

1. Notify Architect when Contractor is aware of materials, equipment, or products that meet the aesthetic and programmatic intent of Contract Documents, but which are more environmentally responsible than materials, equipment, or products specified or indicated in the Contract Documents.

E. A request for substitution constitutes a representation that the submitter:

1. Has investigated proposed product and determined that it meets or exceeds the quality level of the specified product.

2. Agrees to provide the same warranty for the substitution as for the specified product.

3. Agrees to coordinate installation and make changes to other Work that may be required for the Work to be complete with no additional cost to Owner.

4. Waives claims for additional costs or time extension that may subsequently become apparent.

F. Substitutions **will not** be allowed post bid.

G. Each request for substitution approval shall include:

1. Identity of Product for which substitution is requested; include Specification Section.

2. Identity of substitution; include complete Product description, drawings, photographs, performance and test data, and any other information necessary for evaluation. Substitution information shall be displayed in matrix format aligning similar component parts or catagories for evaluation.

3. Quality comparison of proposed substitution with specified product. It is the responsibility of the firm proposing a substitution request to provide a comprehensive comparison of the product. Substitution requests that do not provide the comparrison will be rejected.

4. Changes in other Work required because of substitution.

5. Effect on construction progress schedule.

6. Cost of proposed substitution compared with specified product.

7. Any required license fees or royalties.

8. Availability of maintenance service.

9. Source of replacement materials.

H. Architect and Owner will judge acceptability of any proposed substitution.

3.02 SUBSTITUTIONS AFTER CONTRACT AWARD

A. Approval will be granted only when:

1. Specified Product cannot be delivered without Project delay, or

2. Specified Product has been discontinued, or

3. Specified Product has been replaced by superior Product, or

4. Specified Product cannot be guaranteed as specified, or

5. Specified Product will not perform properly, or

6. Specified Product will not fit within designated space, or

7. Specified Product does not comply with governing codes, or

8. Substitution will be clearly in Owner's interest.

B. Architect will issue Change Order authorizing approved substitutions and revising Contract Sum where appropriate.

3.03 CONTRACT COMPLIANCE

A. Substitution approval does not relieve Contractor from responsibility for proper execution of the Work and for compliance with other Contract requirements.

3.04 OWNER-SUPPLIED PRODUCTS

A. See Section 01 1000 for identification of Owner-supplied products.

B. Owner's Responsibilities:

1. Arrange for and deliver Owner reviewed shop drawings, product data, and samples, to Contractor.

2. Arrange and pay for product delivery to site.

3. On delivery, inspect products jointly with Contractor.

4. Submit claims for transportation damage and replace damaged, defective, or deficient items.

5. Arrange for manufacturers' warranties, inspections, and service.

C. Contractor's Responsibilities:

1. Review Owner reviewed shop drawings, product data, and samples.

2. Receive and unload products at site; inspect for completeness or damage jointly with Owner.

3. Handle, store, install and finish products.

4. Repair or replace items damaged after receipt.

5. Incorprate into CPM schedule and 3 week schedule the installation of the product.

6. Schedule coordination with the installing contractor the installation.

7. Review of installation requirements incorporating into the construction.

3.05 TRANSPORTATION AND HANDLING

A. Package products for shipment in manner to prevent damage; for equipment, package to avoid loss of factory calibration.

B. If special precautions are required, attach instructions prominently and legibly on outside of packaging.

C. Coordinate schedule of product delivery to designated prepared areas in order to minimize site storage time and potential damage to stored materials.

D. Transport and handle products in accordance with manufacturer's instructions.

E. Transport materials in covered trucks to prevent contamination of product and littering of surrounding areas.

F. Promptly inspect shipments to ensure that products comply with requirements, quantities are correct, and products are undamaged.

G. Provide equipment and personnel to handle products by methods to prevent soiling, disfigurement, or damage, and to minimize handling.

H. Arrange for the return of packing materials, such as wood pallets, where economically feasible.

3.06 STORAGE AND PROTECTION

A. Designate receiving/storage areas for incoming products so that they are delivered according to installation schedule and placed convenient to work area in order to minimize waste due to excessive materials handling and misapplication.

B. Store and protect products in accordance with manufacturers' instructions.

C. Store with seals and labels intact and legible.

D. Store sensitive products in weather tight, climate controlled, enclosures in an environment favorable to product.

E. For exterior storage of fabricated products, place on sloped supports above ground.

F. Protect products from damage or deterioration due to construction operations, weather, precipitation, humidity, temperature, sunlight and ultraviolet light, dirt, dust, and other contaminants.

G. Comply with manufacturer's warranty conditions, if any.

H. Cover products subject to deterioration with impervious sheet covering. Provide ventilation to prevent condensation and degradation of products.

I. Prevent contact with material that may cause corrosion, discoloration, or staining.

J. Provide equipment and personnel to store products by methods to prevent soiling, disfigurement, or damage.

K. Arrange storage of products to permit access for inspection. Periodically inspect to verify products are undamaged and are maintained in acceptable condition.

END OF SECTION

SUBSTITUTION REQUEST: DATE SUBMITTED _____

1.01 SUBMIT TO: Paul Chamberlin, Regional Director at paul.chamberlin@hmkco.org

1.02 PROJECT: Seismic Upgrade Project – Laurel Elementary School

1.03 SPECIFIED ITEM:

A. SECTION NAME AND NUMBER: _____

B. PRODUCT TYPE AND NAME AND MODEL: _____

C. PARAGRAPH AND PRODUCT DESCRIPTION: _____

1.04 PROPOSED SUBSTITUTION:

A. MANUFACTURER AND MODEL NUMBER(S): _____

B. PRODUCT DESCRIPTION: _____

C. Attached data includes product description, specifications, drawings, photographs, performance and test data **and point by point comparative matrix** adequate for evaluation of request including identification of applicable data portions. Attached data also includes description of changes to Contract Documents the proposed substitution requires for proper installation.

D. It is the responsibility of the requestee to assemble a comparative matrix outlining key elements of proposed substitution. Substitution requests without the comparative matrix will be rejected.

1.05 UNDERSIGNED CERTIFIES FOLLOWING ITEMS, UNLESS MODIFIED BY ATTACHMENTS, ARE CORRECT:

A. Proposed substitution does not affect dimensions shown on the drawings.

B. Undersigned pays for changes to building design, including engineering design, detailing, and construction costs caused by proposed substitution.

C. Proposed substitution has no adverse effect on other trades, construction schedule, or specified warranty requirements.

D. Maintenance and service parts are available locally or readily obtainable for proposed substitution.

1.06 UNDERSIGNED FURTHER CERTIFIES FUNCTION, APPEARANCE, AND QUALITY OF PROPOSED SUBSTITUTION ARE EQUIVALENT OR SUPERIOR TO SPECIFIED ITEM.

1.07 UNDERSIGNED FURTHER CERTIFIES THAT THE MANUFACTURER OF THE PROPOSED SUBSTITUTION IS AWARE OF THIS SUBSTITUTION REQUEST AND AGREES TO THE STATEMENTS NOTED ABOVE.

1.08 UNDERSIGNED AGREES THAT THE TERMS AND CONDITIONS FOR SUBSTITUTIONS FOUND IN BIDDING DOCUMENTS APPLY TO THIS PROPOSED SUBSTITUTION.

1.09 SUBMITTED BY:

A. NAME: _____ SIGNATURE:_____

B. FIRM NAME: _____

C. FULL MAILING ADDRESS: _____

D. PHONE: _____ E-MAIL: _____

1.10 FOR USE BY ARCHITECT OR ENGINEER

A. APPROVED OR APPROVED AS NOTED BY: _____

B. NOT APPROVED BY: _____

C. RECEIVED TOO LATE: _____

D. REMARKS: _____

E. DATE OF RESPONSE: _____

END OF SECTION

PART 1 GENERAL

1.01 SECTION INCLUDES

A. Requirement for installer certification that they did not use any non-compliant products.

B. VOC restrictions for product categories listed below under "DEFINITIONS."

C. All products of each category that are installed in the project must comply; Owner's project goals do not allow for partial compliance.

1.02 RELATED REQUIREMENTS

A. Section 01 3000 - Administrative Requirements: Submittal procedures.

C. Section 01 4000 - Quality Requirements: Procedures for testing and certifications.

D. Section 01 5721 - Indoor Air Quality Controls: Procedures and testing.

E. Section 01 6000 - Product Requirements: Fundamental product requirements, substitutions and product options, delivery, storage, and handling.

1.03 DEFINITIONS

A. VOC-Restricted Products: All products of each of the following categories when installed or applied on-site in the building interior:

1. Adhesives, sealants, and sealer coatings.
2. Carpet.
3. Carpet tile.
4. Resilient floor coverings.
5. Paints and coatings.
6. Insulation.
7. Gypsum board.
8. Acoustical ceilings and panels.
9. Cabinet work.
10. Wall coverings.
11. Composite wood and agrifiber products used either alone or as part of another product.
12. Other products when specifically stated in the specifications.

B. Interior of Building: Anywhere inside the exterior weather barrier.

C. Adhesives: All gunnable, trowelable, liquid-applied, and aerosol adhesives, whether specified or not; including flooring adhesives, resilient base adhesives, and pipe jointing adhesives.

D. Sealants: All gunnable, trowelable, and liquid-applied joint sealants and sealant primers, whether specified or not; including firestopping sealants and duct joint sealers.

1.04 REFERENCE STANDARDS

A. CRI (GLP) - Green Label Plus Testing Program - Certified Products; Carpet and Rug Institute; Current Edition.

B. GreenSeal GC-03 - Anti-Corrosive Paints; Green Seal, Inc.; 2007

C. GreenSeal GS-11 - Paints; Green Seal, Inc.; 1993.

D. GreenSeal GS-36 - Commercial Adhesives; Green Seal, Inc.; 2011.

E. SCAQMD 1113 - South Coast Air Quality Management District Rule No.1113; current edition; http://www.aqmd.gov/.

F. SCAQMD 1168 - South Coast Air Quality Management District Rule No.1168; current edition; www.aqmd.gov.

G. SCS (CPD) - SCS Certified Products; Scientific Certification Systems; current listings at www.scscertified.com.

1.05 SUBMITTALS

A. See Section 01 3000 - Administrative Requirements, for submittal procedures.

B. Evidence of Compliance: Submit for each different product in each applicable category.

C. Product Data: For each VOC-restricted product used in the project, submit evidence of compliance.

D. Installer Certifications Regarding Prohibited Content: Require each installer of any type of product (not just the products for which VOC restrictions are specified) to certify that either 1) no adhesives, joint sealants, paints, coatings, or composite wood or agrifiber products have been used in the installation of his products, or 2) that such products used comply with these requirements.

PART 2 PRODUCTS

2.01 MATERIALS

A. All Products: Comply with the most stringent of federal, State, and local requirements, or these specifications.

B. Adhesives and Joint Sealants: Provide only products having volatile organic compound (VOC) content not greater than required by South Coast Air Quality Management District Rule No.1168.

1. Definition: This provision applies to gunnable, trowelable, and liquid-applied adhesives, sealants, and sealant primers used anywhere on the interior of the building inside the weather barrier, including duct sealers and fire stopping.

2. ~~LEED:~~ Not Used

3. Certification: Require each installer to certify compliance and submit product data showing product content.

    a. Evidence of Compliance: Acceptable types of evidence are:

        1) Report of laboratory testing performed in accordance with requirements.

        2) Published product data showing compliance with requirements.

        3) Certification by manufacturer that product complies with requirements.

        4) SCAQMD limits for specific product categories:

            a) Architectural ApplicationsVOC Limit g/L less water

                1. Indoor Carpet Adhesives 50

                2. Carpet Pad Adhesives 50

                3. Outdoor Carpet Adhesives 150

                4. Wood Flooring Adhesive 100

                5. Rubber Floor Adhesives 60

                6. Subfloor Adhesives 50

                7. Ceramic Tile Adhesives 65

                8. VCT and Asphalt Tile Adhesives 50

                9. Dry Wall and Panel Adhesives 50

                10. Cove Base Adhesives 50

                11. Multipurpose Construction Adhesives 70

                12. Structural Glazing Adhesives 100

                13. Single Ply Roof Membrane Adhesives 250

            b) Specialty Applications VOC Limits g/L less water

                1. PVC Welding 510

                2. CPVC Welding 490

                3. ABS Welding 325

                4. Plastic Cement Welding 250

5. Adhesive Primer for Plastic 550
6. Computer Diskette Manufacturing 350
7. Contact Adhesive 80
8. Special Purpose Contact Adhesive 250
9. Tire Retread 100
10. Adhesive Primer for Traffic Marking Tape 150
11. Structural Wood Member Adhesive 140
12. Sheet Applied Rubber Lining Operations 850
13. Top and Trim Adhesive 250

c) Substrate Specific ApplicationsVOC Limit g/L less water

1. Metal to Metal 30
2. Plastic Foams 50
3. Porous Material (except wood) 50
4. Wood 30
5. Fiberglass 80

d) Sealants VOC Limit g/L less water

1. Architectural 250
2. Marine Deck 760
3. Nonmembrane Roof 300
4. Roadway 250
5. Single-Ply Roof Membrane 450
6. Other 420

e) Sealant Primers VOC Limit g/L less water

1. Architectural Non Porous 250
2. Architectural Porous 775
3. Modified Bituminous 500
4. Marine Deck 760
5. Other 750

C. Aerosol Adhesives: Provide only products having volatile organic compound (VOC) content not greater than required by GreenSeal GS-36.

1. ~~LEED:~~ Not Used

2. Certification: Require each installer to certify compliance and submit product data showing product content.

a. Evidence of Compliance: Acceptable types of evidence are:

1) Current GreenSeal Certification.

2) Report of laboratory testing performed in accordance with GreenSeal GS-36 requirements.

3) Published product data showing compliance with requirements.

3. GreenSeal limits for specific product categories:

a. Aerosol AdhesivesVOC Weight g/L minus water

1) General purpose mist spray65% VOCs by weight

2) General purpose web spray55% VOCs by weight

3) Special purpose aerosol adhesives (all types)70% VOCs by weight

D. Paints and Coatings:

1. Definition: This provision applies to paints and coatings used anywhere on the interior of the building inside the weather barrier, including all primers and sealers.

2. Provide coatings that comply with the most stringent requirements specified in the following:

a. Architectural Paints and Coatings: Do not exceed VOC content limits established in GreenSeal GS-11.

b. Anti-Corrosive and Anti-Rust Paints: Do not exceed VOC content limits established in GreenSeal GS-03.

c. Clear Wood Finishes, Floor Coatings, Stains, Primers and Shellacs: Do not exceed the VOC content limits established in SCAQMD Rule No. 1113.

3. Determination of VOC Content: Testing and calculation in accordance with 40 CFR 59, Subpart D (EPA Method 24), exclusive of colorants added to a tint base and water added at project site; or other method acceptable to authorities having jurisdiction.

4. This provision is applicable to LEED Credit EQ 4.1; submit LEED Prohibited Content Installer Certification Forms and all support material per section 01 35 16.07.

5. Certification: Require each installer to certify compliance and submit product data showing product content.

   a. Evidence of Compliance: Acceptable types of evidence are:

      1) Report of laboratory testing performed in accordance with requirements.

      2) Published product data showing compliance with requirements.

6. Limits for specific product categories:

   a. Architectural paints, coatings and primers applied to interior walls and ceilings per GreenSeal GS-11

      1) Flats: 50 g/L

      2) Non-Flats: 150 g/L

      3) Primers 50 g/L

   b. Interior Anti-Corrosive and Anti-rust paints, coatings and primers per GreenSeal GS-03, Anti-Corrosive Paints

      1) 250 g/L

   c. All other coatings, paints and sealers per SCAQMD Rule #1113, Architectural Coatings

      1) Coating CategoryVOC Limit g/L

         (a) Bond Breakers 350

         (b) Clear Wood Finishes 275

         (c) Varnish 275

         (d) Sanding Sealers 275

         (e) Lacquer 275

         (f) Clear Brushing Lacquer 275

         (g) Concrete-Curing Compounds 100

         (h) Concrete-Curing Compounds For Roadways and Bridges 350

         (i) Dry-Fog Coatings 150

         (j) Fire-Proofing Exterior Coatings 350

         (k) Fire-Retardant Coatings Clear 650

         (l) Fire-Retardant Coatings Pigmented 350

(m) Flats 50

(n) Floor Coatings 50

(o) Graphic Arts (Sign) Coatings 500

(p) Industrial Maintenance (IM) Coatings 100

(q) High Temperature IM Coatings 420

(r) Zinc-Rich IM Primers 100

(s) Japans/Faux Finishing Coatings 350

(t) Magnesite Cement Coatings 450

(u) Mastic Coatings 300

(v) Metallic Pigmented Coatings 500

(w) Multi-Color Coatings 250

(x) Nonflat Coatings 50

(y) Nonflat High Gloss 50

(z) Pigmented Lacquer 275

(aa) Pre-Treatment Wash Primers 420

(ab) Primers, Sealers, and Undercoaters 100

(ac) Quick-Dry Enamels 50

(ad) Quick-Dry Primers, Sealers, and Undercoaters 100

(ae) Recycled Coatings 250

(af) Roof Coatings 50

(ag) Roof Coatings, Aluminum 100

(ah) Roof Primers, Bituminous 350

(ai) Rust Preventative Coatings 100

(aj) Shellac Clear 730

(ak) Shellac Pigmented 550

(al) Specialty Primers 100

(am) Stains 100

(an) Stains, Interior 250

(ao) Swimming Pool Coatings Repair 340

(ap) Swimming Pool Coatings Other 340

(aq) Traffic Coatings 100

(ar) Waterproofing Sealers 100

(as) Waterproofing Concrete/Masonry Sealers 100

(at) Wood Preservatives Below-Ground 350

(au) Wood Preservatives- Other 350

(av) Low-Solids Coating 120

E. Carpet and Adhesive: Provide products having VOC content not greater than that required for CRI Green Label Plus certification.

1. Evidence of Compliance: Acceptable types of evidence are:

a. Current Green Label Plus Certification.

b. Report of laboratory testing performed in accordance with requirements.

F. Carpet Tile and Adhesive: Provide products having VOC content not greater than that required for CRI Green Label Plus certification.

1. Evidence of Compliance: Acceptable types of evidence are:

a. Current Green Label Plus Certification.

b. Report of laboratory testing performed in accordance with requirements.

G. Composite Wood and Agrifiber Products and Adhesives Used for Laminating Them: Provide products having no added urea-formaldehyde resins.

1. Evidence of Compliance: Acceptable types of evidence are:

a. Current SCS "No Added Urea Formaldehyde" certification; www.scscertified.com.

b. Published product data showing compliance with requirements.

H. Other Product Categories: Comply with limitations specified elsewhere.

PART 3 EXECUTION

3.01 FIELD QUALITY CONTROL

A. Owner reserves the right to reject non-compliant products, whether installed or not, and require their removal and replacement with compliant products at no extra cost to Owner.

B. Additional costs to restore indoor air quality due to installation of non-compliant products will be borne by Contractor.

END OF SECTION

PART 1 GENERAL

1.01 SECTION INCLUDES

A. Examination, preparation, and general installation procedures.

B. Requirements for alterations work, including selective demolition, except removal, disposal, and/or remediation of hazardous materials and toxic substances.

C. Requirements for forming openings in existing construction for all work including mechanical and electrical work.

D. Pre-installation meetings.

E. Cutting and patching.

F. Surveying for laying out the work.

G. Cleaning and protection.

H. Starting of systems and equipment.

I. Demonstration and instruction of Owner personnel.

J. Closeout procedures, including Contractor's Correction Punch List, except payment procedures.

K. General requirements for maintenance service.

L. Substantial completion

M. Final Completion

N. Additional fees for delays in completing work

1.02 RELATED REQUIREMENTS

A. Section 01 1000 - Summary: Limitations on working in existing building; continued occupancy; work sequence; identification of salvaged and relocated materials.

B. Section 01 3000 - Administrative Requirements: Submittals procedures, Electronic document submittal service.

C. Section 01 4000 - Quality Requirements: Testing and inspection procedures.

D. Section 01 5000 - Temporary Facilities and Controls: Temporary exterior enclosures.

E. Section 01 5000 - Temporary Facilities and Controls: Temporary interior partitions.

F. Section 01 5100 - Temporary Utilities: Temporary heating, cooling, and ventilating facilities.

G. Section 01 7419 - Construction Waste Management and Disposal: Additional procedures for trash/waste removal, recycling, salvage, and reuse.

H. Section 01 7800 - Closeout Submittals: Project record documents, operation and maintenance data, warranties and bonds.

I. Section 01 7900 - Demonstration and Training: Demonstration of products and systems to be commissioned and where indicated in specific specification sections,

1.03 REFERENCE STANDARDS

A. NFPA 241 - Standard for Safeguarding Construction, Alteration, and Demolition Operations; 2013.

1.04 SUBMITTALS

A. See Section 01 3000 - Administrative Requirements, for submittal procedures.

B. Survey work: Submit name, address, and telephone number of Surveyor before starting survey work.

1. On request, submit documentation verifying accuracy of survey work.

2. Submit a copy of site drawing signed by the Land Surveyor, that the elevations and locations of the work are in conformance with Contract Documents.

3. Submit surveys and survey logs for the project record.

C. Cutting and Patching: Submit written request in advance of cutting or alteration that affects:

1. Structural integrity of any element of Project.

2. Integrity of weather exposed or moisture resistant element.

3. Efficiency, maintenance, or safety of any operational element.

4. Visual qualities of sight exposed elements.

5. Work of Owner or separate Contractor.

6. Include in request:

a. Identification of Project.

b. Location and description of affected work.

c. Necessity for cutting or alteration.

d. Description of proposed work and products to be used.

e. Effect on work of Owner or separate Contractor.

f. Written permission of affected separate Contractor.

g. Date and time work will be executed.

D. Project Record Documents: Accurately record actual locations of capped and active utilities.

1.05 QUALIFICATIONS

A. For survey work, employ a land surveyor registered in the State in which the Project is located and acceptable to Architect. Submit evidence of Surveyor's Errors and Omissions insurance coverage in the form of an Insurance Certificate.

1.06 PROJECT CONDITIONS

A. Use of explosives is not permitted.

B. Grade site to drain. Maintain excavations free of water. Provide, operate, and maintain pumping equipment.

C. Protect site from puddling or running water. Provide water barriers as required to protect site from soil erosion.

D. Ventilate enclosed areas to assist cure of materials, to dissipate humidity, and to prevent accumulation of dust, fumes, vapors, or gases.

E. Dust Control: Execute work by methods to minimize raising dust from construction operations. Provide positive means to prevent air-borne dust from dispersing into atmosphere and over adjacent property.

1. Provide dust-proof enclosures to prevent entry of dust generated outdoors.

F. Erosion and Sediment Control: Plan and execute work by methods to control surface drainage from cuts and fills, from borrow and waste disposal areas. Prevent erosion and sedimentation.

1. Minimize amount of bare soil exposed at one time.

2. Provide temporary measures such as berms, dikes, and drains, to prevent water flow.

3. Construct fill and waste areas by selective placement to avoid erosive surface silts or clays.

4. Periodically inspect earthwork to detect evidence of erosion and sedimentation; promptly apply corrective measures.

G. Noise Control: Provide methods, means, and facilities to minimize noise produced by construction operations.

1. At All Times: Excessively noisy tools and operations will not be tolerated inside the building at any time of day; excessively noisy includes jackhammers.

2. Outdoors: Limit conduct of especially noisy exterior work to the hours of 8 am to 5 pm.

3. Indoors: Limit conduct of especially noisy interior work to the hours of 6 pm to 7 am.

H. Pest and Rodent Control: Provide methods, means, and facilities to prevent pests and insects from damaging the work.

I. Pollution Control: Provide methods, means, and facilities to prevent contamination of soil, water, and atmosphere from discharge of noxious, toxic substances, and pollutants produced by construction operations. Comply with federal, state, and local regulations.

1.07 COORDINATION

A. Coordinate work of alterations and renovations to expedite completion sequentially and to accommodate occupancy requirements.

B. Coordinate scheduling, submittals, and work of the various sections of the Project Manual to ensure efficient and orderly sequence of installation of interdependent construction elements, with provisions for accommodating items installed later.

C. Notify affected utility companies and comply with their requirements.

D. Verify that utility requirements and characteristics of new operating equipment are compatible with building utilities. Coordinate work of various sections having interdependent responsibilities for installing, connecting to, and placing in service, such equipment.

E. Coordinate space requirements, supports, and installation of mechanical and electrical work that are indicated diagrammatically on Drawings. Follow routing shown for pipes, ducts, and conduit, as closely as practicable; place runs parallel with lines of building. Utilize spaces efficiently to maximize accessibility for other installations, for maintenance, and for repairs.

F. In finished areas except as otherwise indicated, conceal pipes, ducts, and wiring within the construction. Coordinate locations of fixtures and outlets with finish elements.

G. Coordinate completion and clean-up of work of separate sections.

H. After Owner occupancy of premises, coordinate access to site for correction of defective work and work not in accordance with Contract Documents, to minimize disruption of Owner's activities.

1.08 CONTRACTOR'S FULL TIME SUPERVISION OF THE WORK

A. Contractor shall provide an on-site project superintendent to be present full time whenever work is occurring on site.

B. Contractor's Superintendent shall maintain a Daily Log of work activities at the site during construction.

1. Submit copies of the Daliy Logs to the Owner on a weekly basis.

PART 2 PRODUCTS

2.01 PATCHING MATERIALS

A. New Materials: As specified in product sections; match existing products and work for patching and extending work.

B. Type and Quality of Existing Products: Determine by inspecting and testing products where necessary, referring to existing work as a standard.

C. Product Substitution: For any proposed change in materials, submit request for substitution described in Section 01 6000 - Product Requirements.

PART 3 EXECUTION

3.01 EXAMINATION

A. Verify that existing site conditions and substrate surfaces are acceptable for subsequent work. Start of work means acceptance of existing conditions.

B. Verify that existing substrate is capable of structural support or attachment of new work being applied or attached.

C. Examine and verify specific conditions described in individual specification sections.

D. Take field measurements before confirming product orders or beginning fabrication, to minimize waste due to over-ordering or misfabrication.

E. Verify that utility services are available, of the correct characteristics, and in the correct locations.

F. Prior to Cutting: Examine existing conditions prior to commencing work, including elements subject to damage or movement during cutting and patching. After uncovering existing work, assess conditions affecting performance of work. Beginning of cutting or patching means acceptance of existing conditions.

3.02 PREPARATION

A. Clean substrate surfaces prior to applying next material or substance.

B. Seal cracks or openings of substrate prior to applying next material or substance.

C. Apply manufacturer required or recommended substrate primer, sealer, or conditioner prior to applying any new material or substance in contact or bond.

3.03 PREINSTALLATION MEETINGS

A. When required in individual specification sections, convene a preinstallation meeting at the site prior to commencing work of the section.

B. Require attendance of parties directly affecting, or affected by, work of the specific section.

C. Notify Architect seven days in advance of meeting date.

D. Prepare agenda and preside at meeting:

1. Review conditions of examination, preparation and installation procedures.

2. Review coordination with related work.

E. Record minutes and distribute copies within two days after meeting to participants, Architect, Owner’s Representative, and those affected by decisions made.

3.04 LAYING OUT THE WORK

A. Verify locations of survey control points prior to starting work.

B. Promptly notify Architect of any discrepancies discovered.

C. Protect survey control points prior to starting site work; preserve permanent reference points during construction.

D. Promptly report to Architect the loss or destruction of any reference point or relocation required because of changes in grades or other reasons.

E. Replace dislocated survey control points based on original survey control. Make no changes without prior written notice to Architect.

F. Utilize recognized engineering survey practices.

G. Establish elevations, lines and levels. Locate and lay out by instrumentation and similar appropriate means:

1. Site improvements including pavements; stakes for grading, fill and topsoil placement; utility locations, slopes, and invert elevations.

2. Grid or axis for structures.

3. Building foundation, column locations, ground floor elevations.

H. Periodically verify layouts by same means.

I. Maintain a complete and accurate log of control and survey work as it progresses.

3.05 GENERAL INSTALLATION REQUIREMENTS

A. Install products as specified in individual sections, in accordance with manufacturer's instructions and recommendations, and so as to avoid waste due to necessity for replacement.

B. Make vertical elements plumb and horizontal elements level, unless otherwise indicated.

C. Install equipment and fittings plumb and level, neatly aligned with adjacent vertical and horizontal lines, unless otherwise indicated.

D. Make consistent texture on surfaces, with seamless transitions, unless otherwise indicated.

E. Make neat transitions between different surfaces, maintaining texture and appearance.

3.06 ALTERATIONS

A. The stability and integrity of the existing structure during demolition and selective demolition shall be maintained at levels generally acceptable within the construction industry by the use of temporary bracing, shoring, and underpinning until the proposed structure modifications are completed. In no case shall the existing structure be allowed to become unsafe during construction.

B. The design, installation, and removal of shoring and bracing systems required to provide temporary support of the existing structure during construction shall be the responsibility of the Contractor and shall be designed to support the dead, live, soil, earthquake, and wind loads that may be imposed on the structure during construction in accordance with industry standards and generally accepted engineering principals. Provide the services of a registered professional engineer to design these systems when required by Oregon State Statute and the building code.

C. Drawings showing existing construction and utilities are based on casual field observation and existing record documents only.

1. Verify that construction and utility arrangements are as shown.

2. Report discrepancies to Architect before disturbing existing installation.

3. Beginning of alterations work constitutes acceptance of existing conditions.

D. Keep areas in which alterations are being conducted separated from other areas that are still occupied.

1. Provide, erect, and maintain temporary dustproof partitions of construction specified in Section 01 5000 in locations indicated on drawings.

2. Provide appropriate temporary signage including signage for exit or building egress.

E. Maintain weatherproof exterior building enclosure except for interruptions required for replacement or modifications; take care to prevent water and humidity damage.

1. Where openings in exterior enclosure exist, provide construction to make exterior enclosure weatherproof.

2. Insulate existing ducts or pipes that are exposed to outdoor ambient temperatures by alterations work.

F. Comply with regulatory requirements for Alteration Work:

1. Conform to applicable code for demolition work, dust control, products requiring electrical disconnection and re-connection.

2. Obtain required permits from authorities.

3. Do not close or obstruct egress from any building exit or site exit.

4. Do not disable or disrupt building fire or life safety systems without 3 days' prior written notice to Owner.

5. Conform to applicable regulatory procedures when hazardous or contaminated materials are discovered. Stop all work in the area and notify the Owner's representative.

a. Owner will provide verification, abatement, and removal as required to complete the Work.

G. Remove existing work as indicated and as required to accomplish new work.

1. Remove items indicated on drawings.

2. Relocate items indicated on drawings.

3. Where new surface finishes are to be applied to existing work, perform removals, patch, and prepare existing surfaces as required to receive new finish; remove existing finish if necessary for successful application of new finish.

4. Where new surface finishes are not specified or indicated, patch holes and damaged surfaces to match adjacent finished surfaces as closely as possible.

H. Services (Including but not limited to HVAC, Plumbing, Fire Protection, Electrical, and Telecommunications): Remove, relocate, and extend existing systems to accommodate new construction.

1. Notify affected utility companies before starting work and comply with their requirements.

2. Mark location and termination of utilities.

3. Maintain existing active systems that are to remain in operation; maintain access to equipment and operational components; if necessary, modify installation to allow access or provide access panel.

4. Do not interrupt existing utilities serving occupied or used facilities, except when authorized in writing by the Owner. Provide temporary services during interruption of existing utilities, as acceptable to the Owner

5. Where existing systems or equipment are not active and Contract Documents require reactivation, put back into operational condition; repair supply, distribution, and equipment as required.

6. Where existing active systems serve occupied facilities but are to be replaced with new services, maintain existing systems in service until new systems are complete and ready for service.

a. Disable existing systems only to make switchovers and connections; minimize duration of outages.

b. Provide temporary connections as required to maintain existing systems in service.

7. Verify that abandoned services serve only abandoned facilities.

8. Remove abandoned pipe, ducts, conduits, and equipment, including those above accessible ceilings; remove back to source of supply where possible, otherwise cap stub and tag with identification; patch holes left by removal using materials specified for new construction.

I. Protect existing work to remain.

1. Prevent movement of structure; provide shoring and bracing if necessary.

2. Perform cutting to accomplish removals neatly and as specified for cutting new work.

3. Repair adjacent construction and finishes damaged during removal work.

4. Cover finish floors to remain.

5. Use only rubber tired vehicles for conveying materials in building.

J. Adapt existing work to fit new work: Make as neat and smooth transition as possible.

1. When existing finished surfaces are cut so that a smooth transition with new work is not possible, terminate existing surface along a straight line at a natural line of division and make recommendation to Architect.

2. Where removal of partitions or walls results in adjacent spaces becoming one, rework floors, walls, and ceilings to a smooth plane without breaks, steps, or bulkheads.

3. Where a change of plane of 1/4 inch or more occurs in existing work, submit recommendation for providing a smooth transition for Architect review and request instructions.

4. Trim existing wood doors as necessary to clear new floor finish. Refinish trim as required.

K. Patching: Where the existing surface is not indicated to be refinished, patch to match the surface finish that existed prior to cutting. Where the surface is indicated to be refinished, patch so that the substrate is ready for the new finish.

L. Refinish existing surfaces as indicated:

1. Where rooms or spaces are indicated to be refinished, refinish all visible existing surfaces to remain to the specified condition for each material, with a neat transition to adjacent finishes.

2. If mechanical or electrical work is exposed accidentally during the work, re-cover and refinish to match.

M. Clean existing systems and equipment.

N. Remove demolition debris and abandoned items from alterations areas and dispose of off-site; do not burn or bury.

O. Clean remaining structure, equipment and facilities of all dirt, dust, and debris caused by demolition work. Return areas to conditions existing prior to the start of the work.

P. Do not begin new construction in alterations areas before demolition is complete.

Q. Comply with all other applicable requirements of this section.

3.07 CUTTING AND PATCHING

A. Whenever possible, execute the work by methods that avoid cutting or patching.

B. See Alterations article above for additional requirements.

C. Perform whatever cutting and patching is necessary to:

1. Complete the work.

2. Fit products together to integrate with other work.

3. Provide openings for penetration of mechanical, electrical, and other services.

4. Match work that has been cut to adjacent work.

5. Repair areas adjacent to cuts to required condition.

6. Repair new work damaged by subsequent work.

7. Remove samples of installed work for testing when requested.

8. Remove and replace defective and non-conforming work.

D. Execute work by methods that avoid damage to other work and that will provide appropriate surfaces to receive patching and finishing. In existing work, minimize damage and restore to original condition.

E. Employ original installer to perform cutting for weather exposed and moisture resistant elements, and sight exposed surfaces.

F. Cut rigid materials using masonry saw or core drill. Pneumatic tools not allowed without prior approval.

G. Restore work with new products in accordance with requirements of Contract Documents.

H. Fit work air tight to pipes, sleeves, ducts, conduit, and other penetrations through surfaces.

I. At penetrations of fire rated walls, partitions, ceiling, or floor construction, completely seal voids with fire rated material in accordance with Section 07 8400, to full thickness of the penetrated element.

J. Sawcutting:

1. Employ experienced sawcutting contractor to make all holes, or slab and pavement cutting shown in drawings for architectural, structural, mechanical and electrical work.

2. Do not use water saws in occupied areas, unless otherwise approved.

3. Cut openings square and plumb with sharp edges. Minimize overcutting at corners.

4. Verify location of existing utilities in work area and make proper precautions to protect, disconnect and relocate, or terminate services as directed.

K. Patching:

1. Finish patched surfaces to match finish that existed prior to patching. On continuous surfaces, refinish to nearest intersection or natural break. For an assembly, refinish entire unit.

2. Match color, texture, and appearance.

3. Repair patched surfaces that are damaged, lifted, discolored, or showing other imperfections due to patching work. If defects are due to condition of substrate, repair substrate prior to repairing finish.

L. Maintain adequate Temporary Support necessary to assure structural integrity of affected Work.

M. Protect other portions of Project Work against damage and discoloration.

N. Protect Work exposed by cutting against damage and discoloration.

O. Refinish surfaces to match adjacent finish. For continuous surfaces, refinish to nearest intersection or natural break. For an assembly, refinish entire unit.

P. Make neat transitions. Patch work to match adjacent work in texture and appearance. Where new work abuts or aligns with existing, perform a smooth and even transition.

Q. Patch or replace surfaces that are damaged, lifted, discolored, or showing other imperfections due to patching work. Repair substrate prior to patching finish. Finish patches to produce uniform finish and texture over entire area. When finish cannot be matched, refinish entire surface to nearest intersections.

3.08 PROGRESS CLEANING

A. Maintain areas free of waste materials, debris, and rubbish. Maintain site in a clean and orderly condition.

B. Remove debris and rubbish from pipe chases, plenums, attics, crawl spaces, and other closed or remote spaces, prior to enclosing the space.

C. Broom and vacuum clean interior areas prior to start of surface finishing, and continue cleaning to eliminate dust.

D. Collect and remove waste materials, debris, and trash/rubbish from site periodically and dispose off-site; do not burn or bury.

3.09 PROTECTION OF INSTALLED WORK

A. Protect installed work from damage by construction operations.

B. Provide special protection where specified in individual specification sections.

C. Provide temporary and removable protection for installed products. Control activity in immediate work area to prevent damage.

D. Provide protective coverings at walls, projections, jambs, sills, and soffits of openings.

E. Protect finished floors, stairs, and other surfaces from traffic, dirt, wear, damage, or movement of heavy objects, by protecting with durable sheet materials.

F. Prohibit traffic or storage upon waterproofed or roofed surfaces. If traffic or activity is necessary, obtain recommendations for protection from waterproofing or roofing material manufacturer.

G. Prohibit traffic from landscaped areas.

H. Remove protective coverings when no longer needed; reuse or recycle plastic coverings if possible.

3.10 SYSTEM STARTUP

A. Coordinate schedule for start-up of various equipment and systems.

B. Notify Architect and owner seven days prior to start-up of each item.

C. Verify that each piece of equipment or system has been checked for proper lubrication, drive rotation, belt tension, control sequence, and for conditions that may cause damage.

D. Verify tests, meter readings, and specified electrical characteristics agree with those required by the equipment or system manufacturer.

E. Verify that wiring and support components for equipment are complete and tested.

F. Execute start-up under supervision of applicable Contractor personnel and manufacturer's representative in accordance with manufacturers' instructions.

G. When specified in individual specification Sections, require manufacturer to provide authorized representative to be present at site to inspect, check, and approve equipment or system installation prior to start-up, and to supervise placing equipment or system in operation.

H. Submit a written report that equipment or system has been properly installed and is functioning correctly.

3.11 DEMONSTRATION AND INSTRUCTION

See Section 017900 for requirements

3.12 ADJUSTING

A. Adjust operating products and equipment to ensure smooth and unhindered operation.

B. Testing, Adjusting, and Balancing HVAC Systems: See Section 23 0593 Testing, Adjusting, and Balancing for HVAC.

3.13 FINAL CLEANING

A. Use cleaning materials that are nonhazardous.

B. Clean interior and exterior glass, surfaces exposed to view; remove temporary labels, stains and foreign substances, polish transparent and glossy surfaces, vacuum carpeted and soft surfaces.

C. Remove all labels that are not permanent. Do not paint or otherwise cover fire test labels or nameplates on mechanical and electrical equipment.

D. Clean equipment and fixtures to a sanitary condition with cleaning materials appropriate to the surface and material being cleaned.

E. Clean interior floors in accordance with flooring manufacturer instructions.

F. Clean filters of operating equipment.

G. Clean debris from roofs, gutters, downspouts, scuppers, overflow drains, area drains, and drainage systems.

H. Clean site; sweep paved areas, rake clean landscaped surfaces.

I. Remove waste, surplus materials, trash/rubbish, and construction facilities from the site; dispose of in legal manner; do not burn or bury.

3.14 CLOSEOUT PROCEDURES

A. Make submittals that are required by governing or other authorities.

B. Accompany Architect and Owner’s Representitive on preliminary inspection to determine items to be listed for completion or correction in the Contractor's Correction Punch List for Contractor's Notice of Substantial Completion.

C. Notify Architect when work is considered ready for Architect's Substantial Completion inspection.

D. Conduct Substantial Completion inspection and create Final Correction Punch List containing Architect's and Contractor's comprehensive list of items identified to be completed or corrected and submit to Architect.

3.15 SUBSTANTIAL COMPLETION

A. Submit written certification that Contract Documents have been reviewed, work has been inspected, and that work is complete in accordance with Contract Documents and ready for Architect's review.

B. Complete all required maintenance work prior to the date of substantial completion.

C. When Contractor considers Work substantially complete, as defined in General Conditions, submit to the Architect:

1. Written notice that Work, or designated portion thereof, is substantially complete.

2. Written certification containing Contractor's Correction Punch List, that Contract Documents have been reviewed, work has been inspected, and that work is complete in accordance with Contract Documents and ready for Architect's Substantial Completion inspection.

3. Copy of Final or Temporary Occupancy Permit.

D. Architect will, as soon as possible thereafter, make an observation visit to the site to determine completion status.

E. Should Architect determine that Work is not substantially complete:

1. Architect will promptly notify Contractor in writing, giving reasons therefore.

2. Contractor shall remedy Work deficiencies, and send second notice of substantial completion to Architect.

3. Architect will review the corrected work.

F. When Architect concurs that Work is substantially complete, Architect will:

1. Prepare Certificate of Substantial Completion, accompanied by Contractor's list of items to be completed or corrected, as verified and amended by Architect.

2. Submit Certificate to Owner and Contractor for their written acceptance of the responsibilities assigned to them in the Certificate.

G. Correct items of work listed in executed Certificates of Substantial Completion and comply with requirements for access to Owner-occupied areas.

H. Notify Architect when work is considered finally complete.

I. Complete items of work determined by Architect's final inspection.

J. See Section 00 6000 General Conditions for additonal requirements.

3.16 FINAL ACCEPTANCE

A. When Contractor considers Work complete, submit written certification that:

1. Contract Documents have been reviewed.

2. Contractor has inspected Work for compliance with Contract Documents.

3. Work has been completed in accordance with Contract Documents.

4. Equipment and Systems have been tested in presence of Owner's Representative and are operational.

5. Work is complete and ready for final inspection.

B. Architect will, as soon as possible thereafter, make an observation visit to the site to determine completion status.

C. Should Architect consider Work incomplete or defective:

1. Architect will promptly notify Contractor in writing, listing incomplete or defective Work.

2. Contractor shall immediately remedy deficiencies, and send second written certification to Architect that Work is complete.

3. Architect will review the corrected Work.

D. When Architect finds Work acceptable under Contract Documents, Architect will request Contractor to make closeout submittals.

E. See Section 00 6000 General Conditions for additonal requirements.

3.17 ADDITIONAL FEES FOR DELAYS IN COMPLETING THE WORK

A. Architect will make 2 visits to the project site, one at Substantial Completion and one at Final Completion.

B. Should Architect be required to make more than the stated 2 final site visits due to Contractor's failure to correct specified deficiencies:

1. Owner will compensate Architect for additional services.

2. Owner will deduct Architect's compensation amount from Contractor's final payment as follows:

a. Principal's time at their contracted hourly rate.

b. Employees' time at their contracted hourly rate.

c. Consultant employees and Others at 1.1 times the direct cost incurred.

d. Charges will be made for necessary travel time, commercial air fare, auto expense computed at current allowable IRS mileage rate, room and board, and all other expenses incurred in making inspections.

END OF SECTION

PART 1 GENERAL

1.01 WASTE MANAGEMENT REQUIREMENTS

A. Owner requires that this project generate the least amount of trash and waste possible.

B. Employ processes that ensure the generation of as little waste as possible due to error, poor planning, breakage, mishandling, contamination, or other factors.

C. Minimize trash/waste disposal in landfills; reuse, salvage, or recycle as much waste as economically feasible.

D. Required Recycling, Salvage, and Reuse: The following may not be disposed of in landfills or by incineration:

1. Aluminum and plastic beverage containers.

2. Corrugated cardboard.

3. Wood pallets.

4. Clean dimensional wood: May be used as blocking or furring.

5. Land clearing debris, including brush, branches, logs, and stumps; see Section 31 1000 - Site Clearing for use options.

6. Metals, including packaging banding, metal studs, sheet metal, structural steel, piping, reinforcing bars, door frames, and other items made of steel, iron, galvanized steel, stainless steel, aluminum, copper, zinc, lead, brass, and bronze.

7. Fluorescent lamps (light bulbs).

E. Contractor shall submit periodic Waste Disposal Reports; all landfill disposal, recycling, salvage, and reuse must be reported regardless of to whom the cost or savings accrues; use the same units of measure on all reports.

F. Contractor shall develop and follow a Waste Management Plan designed to implement these requirements.

G. Methods of trash/waste disposal that are not acceptable are:

1. Burning on the project site.

2. Burying on the project site.

3. Dumping or burying on other property, public or private.

4. Other illegal dumping or burying.

5. Incineration, either on- or off-site.

6. Use of Owner's trash receptacles.

H. Regulatory Requirements: Contractor is responsible for knowing and complying with regulatory requirements, including but not limited to Federal, state and local

requirements, pertaining to legal disposal of all construction and demolition waste materials.

1.02 RELATED REQUIREMENTS

A. Section 01 3000 - Administrative Requirements: Additional requirements for project meetings, reports, submittal procedures, and project documentation.

B. Section 01 5000 - Temporary Facilities and Controls: Additional requirements related to trash/waste collection and removal facilities and services.

C. Section 01 6000 - Product Requirements: Waste prevention requirements related to delivery, storage, and handling.

D. Section 01 7000 - Execution and Closeout Requirements: Trash/waste prevention procedures related to demolition, cutting and patching, installation, protection, and cleaning.

1.03 DEFINITIONS

A. Clean: Untreated and unpainted; not contaminated with oils, solvents, caulk, or the like.

B. Construction and Demolition Waste: Solid wastes typically including building materials, packaging, trash, debris, and rubble resulting from construction, remodeling, repair and demolition operations.

C. Hazardous: Exhibiting the characteristics of hazardous substances, i.e., ignitibility, corrosivity, toxicity or reactivity.

D. Nonhazardous: Exhibiting none of the characteristics of hazardous substances, i.e., ignitibility, corrosivity, toxicity, or reactivity.

E. Nontoxic: Neither immediately poisonous to humans nor poisonous after a long period of exposure.

F. Recyclable: The ability of a product or material to be recovered at the end of its life cycle and remanufactured into a new product for reuse by others.

G. Recycle: To remove a waste material from the project site to another site for remanufacture into a new product for reuse by others.

H. Recycling: The process of sorting, cleansing, treating and reconstituting solid waste and other discarded materials for the purpose of using the altered form. Recycling does not include burning, incinerating, or thermally destroying waste.

I. Return: To give back reusable items or unused products to vendors for credit.

J. Reuse: To reuse a construction waste material in some manner on the project site.

K. Salvage: To remove a waste material from the project site to another site for resale or reuse by others.

L. Sediment: Soil and other debris that has been eroded and transported by storm or well production run-off water.

M. Source Separation: The act of keeping different types of waste materials separate beginning from the first time they become waste.

N. Toxic: Poisonous to humans either immediately or after a long period of exposure.

O. Trash: Any product or material unable to be reused, returned, recycled, or salvaged.

P. Waste: Extra material or material that has reached the end of its useful life in its intended use. Waste includes salvageable, returnable, recyclable, and reusable material.

1.04 SUBMITTALS

A. See Section 01 3000 - Administrative Requirements, for submittal procedures.

B. Submit Waste Management Plan within 10 calendar days after receipt of Notice of Award of Bid, or prior to any trash or waste removal, whichever occurs sooner; submit projection of all trash and waste that will require disposal and alternatives to landfilling.

C. Waste Management Plan: Include the following information:

1. Analysis of the trash and waste projected to be generated during the entire project construction cycle, including types and quantities.

2. Landfill Options: The name, address, and telephone number of the landfill(s) where trash/waste will be disposed of, the applicable landfill tipping fee(s), and the projected cost of disposing of all project trash/waste in the landfill(s).

3. Landfill Alternatives: List all waste materials that will be diverted from landfills by reuse, salvage, or recycling.

D. Waste Disposal Reports: Submit at specified intervals, with details of quantities of trash and waste, means of disposal or reuse, and costs; show both totals to date and since last report.

1. Submit updated Report with each Application for Progress Payment; failure to submit Report will delay payment.

2. Submit Report on a form acceptable to Owner.

3. Landfill Disposal: Include the following information:

a. Identification of material.

b. Amount, in tons or cubic yards, of trash/waste material from the project disposed of in landfills.

c. State the identity of landfills, total amount of tipping fees paid to landfill, and total disposal cost.

d. Include manifests, weight tickets, receipts, and invoices as evidence of quantity and cost.

4. Recycled and Salvaged Materials: Include the following information for each:

a. Identification of material, including those retrieved by installer for use on other projects.

b. Amount, in tons or cubic yards, date removed from the project site, and receiving party.

c. Transportation cost, amount paid or received for the material, and the net total cost or savings of salvage or recycling each material.

d. Include manifests, weight tickets, receipts, and invoices as evidence of quantity and cost.

e. Certification by receiving party that materials will not be disposed of in landfills or by incineration.

5. Material Reused on Project: Include the following information for each:

a. Identification of material and how it was used in the project.

b. Amount, in tons or cubic yards.

c. Include weight tickets as evidence of quantity.

6. Other Disposal Methods: Include information similar to that described above, as appropriate to disposal method.

PART 2 PRODUCTS - NOT USED

PART 3 EXECUTION

3.01 WASTE MANAGEMENT PLAN IMPLEMENTATION

A. Manager: Designate an on-site person or persons responsible for instructing workers and overseeing and documenting results of the Waste Management Plan.

B. Spill Response Planning - Establish spill prevention and cleanup procedures. Identify all potential spill areas and develop procedures for avoiding and responding to spills should they occur.

C. Communication: Distribute copies of the Waste Management Plan to job site foreman, each subcontractor, Owner, and Architect.

D. Instruction: Provide on-site instruction of appropriate separation, handling, and recycling, salvage, reuse, and return methods to be used by all parties at the appropriate stages of the project.

E. Meetings: Discuss trash/waste management goals and issues at project meetings.

1. Pre-bid meeting.

2. Pre-construction meeting.

3. Regular job-site meetings.

F. Facilities: Provide specific facilities for separation and storage of materials for recycling, salvage, reuse, return, and trash disposal, for use by all contractors and installers.

1. Provide containers as required.

2. Provide adequate space for pick-up and delivery and convenience to subcontractors.

3. If an enclosed area is not provided, clearly lay out and label a specific area on-site.

4. Keep recycling and trash/waste bin areas neat and clean and clearly marked in order to avoid contamination of materials.

G. Hazardous Wastes: Separate, store, and dispose of hazardous wastes according to applicable regulations.

H. Recycling: Separate, store, protect, and handle at the site identified recyclable waste products in order to prevent contamination of materials and to maximize recyclability of identified materials. Arrange for timely pickups from the site or deliveries to recycling facility in order to prevent contamination of recyclable materials.

I. Reuse of Materials On-Site: Set aside, sort, and protect separated products in preparation for reuse.

J. Salvage: Set aside, sort, and protect products to be salvaged for reuse off-site.

END OF SECTION

PART 1 GENERAL

1.01 SECTION INCLUDES

A. Project Record Documents.

B. Operation and Maintenance Data.

C. Warranties and bonds.

D. Maintenace Agreements.

1.02 RELATED REQUIREMENTS

A. Section 00 6000 - General Conditions for additonal requirements.

B. Section 01 3000 - Administrative Requirements: Submittals procedures, shop drawings, product data, and samples.

C. Section 01 7000 - Execution and Closeout Requirements: Contract closeout procedures.

D. Individual Product Sections: Specific requirements for operation and maintenance data.

E. Individual Product Sections: Warranties required for specific products or Work.

F. Individual Product Sections: Maintenance Agreements for specific products or Work.

1.03 SUBMITTALS

A. Substantial Completion will not commence before the Operations and Maintenance Manuals, Warranties, and the Record Drawings are submitted in accordance with Section 01 7000.

B. Project Record Documents: Submit documents to Architect Prior to Substantial Completion.

C. Operation and Maintenance Data:

1. Submit one paper copy of preliminary draft or proposed formats and outlines of contents before start of Work. Architect will review draft and return the one copy with comments.

2. For equipment, or component parts of equipment put into service during construction and operated by Owner, submit completed documents within ten days after acceptance.

3. Submit one copy of completed documents 30 days prior to scheduled date of substantial completion.. This copy will be reviewed and returned, with Architect comments. Revise content of all document sets as required prior to final submission.

4. Submit one digital copy in PDF file format on flash drive, and two paper sets of revised final documents in final form prior to date of Substantial Completion.

5. Either the draft copy or the final copy of the O&M manuals must be on the project site during any of the operator training scheduled for the project.

D. Warranties and Bonds:

1. For equipment or component parts of equipment put into service during construction with Owner's permission, submit documents within 10 days after acceptance.

2. Make other submittals within 10 days after Date of Substantial Completion, prior to final Application for Payment.

3. For items of Work for which acceptance is delayed beyond Date of Substantial Completion, submit within 10 days after acceptance, listing the date of acceptance as the beginning of the warranty period.

4. Submit three digital copies in PDF file format on flash drive, and 1 paper set of final documents prior to date of Substantial Completion.

PART 2 PRODUCTS - NOT USED

PART 3 EXECUTION

3.01 PROJECT RECORD DOCUMENTS

A. Maintain on site one set of the following record documents; record actual revisions to the Work:

1. Drawings.

2. Specifications.

3. Addenda.

4. Change Orders and other modifications to the Contract.

5. Requests for Information, Submittals, Architect’s Field Instructions and associated logs.

B. Maintenance of documents and samples.

1. Store in Contractor's Field Office apart from Documents used for Construction.

2. Provide Files, Shelving and Cabinets necessary to safely and securely store Documents and Samples.

3. Maintain Documents in a clean, dry, legible, and good order.

4. Do not use Record Documents for Construction Purposes.

5. Make Documents available at all time for Architect's inspection

C. Ensure entries are complete and accurate, enabling future reference by Owner.

D. Store record documents separate from documents used for construction.

E. Record information concurrent with construction progress.

F. Specifications: Legibly mark and record at each product section description of actual products installed, including the following:

1. Manufacturer's name and product model and number.

2. Product substitutions or alternates utilized.

3. Changes made by Addenda and modifications.

G. Record Drawings: Legibly mark each item to record actual construction including:

1. Measured depths of foundations in relation to finish first floor datum.

2. Measured horizontal and vertical locations of underground utilities and appurtenances, referenced to permanent surface improvements.

3. Measured locations of internal utilities and appurtenances concealed in construction, referenced to visible and accessible features of the Work.

4. Field changes of dimension and detail.

5. Details not on original Contract drawings.

6. Provide in both Auto-Cad and PDF formats

3.02 OPERATION AND MAINTENANCE DATA

A. Source Data: For each product or system, list names, addresses and telephone numbers of Subcontractors and suppliers, including local source of supplies and replacement parts.

B. Product Data: Mark each sheet to clearly identify specific products and component parts, and data applicable to installation. Delete inapplicable information.

C. Drawings: Supplement product data to illustrate relations of component parts of equipment and systems, to show control and flow diagrams. Do not use Project Record Documents as maintenance drawings.

D. Typed Text: As required to supplement product data. Provide logical sequence of instructions for each procedure, incorporating manufacturer's instructions.

3.03 OPERATION AND MAINTENANCE DATA FOR MATERIALS AND FINISHES

A. For Each Product, Applied Material, and Finish:

1. Product data, with catalog number, size, composition, and color and texture designations.

2. Information for re-ordering custom manufactured products.

B. Instructions for Care and Maintenance: Manufacturer's recommendations for cleaning agents and methods, precautions against detrimental cleaning agents and methods, and recommended schedule for cleaning and maintenance.

C. Moisture protection and weather-exposed products: Include product data listing applicable reference standards, chemical composition, and details of installation. Provide recommendations for inspections, maintenance, and repair.

D. Additional information as specified in individual product specification sections.

E. Where additional instructions are required, beyond the manufacturer's standard printed instructions, have instructions prepared by personnel experienced in the operation and maintenance of the specific products.

F. Provide a listing in Table of Contents for design data, with tabbed fly sheet and space for insertion of data.

3.04 OPERATION AND MAINTENANCE DATA FOR EQUIPMENT AND SYSTEMS

A. In addition to requirements called for in other sections of this manual, provide the following:

B. For Each Item of Equipment and Each System:

1. Description of unit or system, and component parts.

2. Identify function, normal operating characteristics, and limiting conditions.

3. Include performance curves, with engineering data and tests.

4. Complete nomenclature and model number of replaceable parts.s.

C. Where additional instructions are required, beyond the manufacturer's standard printed instructions, have instructions prepared by personnel experienced in the operation and maintenance of the specific products.

D. Panelboard Circuit Directories: Provide electrical service characteristics, controls, and communications; typed.

E. Include color coded wiring diagrams as installed.

F. Operating Procedures: Include start-up, break-in, and routine normal operating instructions and sequences. Include regulation, control, stopping, shut-down, and emergency instructions. Include summer, winter, and any special operating instructions.

G. Maintenance Requirements: Include routine procedures and guide for preventative maintenance and trouble shooting; disassembly, repair, and reassembly instructions; and alignment, adjusting, balancing, and checking instructions.

H. Provide servicing and lubrication schedule, and list of lubricants required.

I. Include manufacturer's printed operation and maintenance instructions.

J. Include sequence of operation by controls manufacturer.

K. Provide original manufacturer's parts list, illustrations, assembly drawings, and diagrams required for maintenance.

L. Provide control diagrams by controls manufacturer as installed.

M. Provide Contractor's coordination drawings, with color coded piping diagrams as installed.

N. Provide charts of valve tag numbers, with location and function of each valve, keyed to flow and control diagrams.

O. Provide list of original manufacturer's spare parts, current prices, and recommended quantities to be maintained in storage.

P. Include test and balancing reports.

3.05 ASSEMBLY OF OPERATION AND MAINTENANCE MANUALS

A. Assemble operation and maintenance data into durable manuals for Owner's personnel use, with data arranged in the same sequence as, and identified by, the specification sections.

B. Where systems involve more than one specification section, provide separate tabbed divider for each system.

C. Prepare instructions and data by personnel experienced in maintenance and operation of described products.

D. Prepare data in the form of an instructional manual.

E. Digital O&M Manuals: In addition to binders described below, prepare manuals as PDF documents organized similar to the printed manuals. Copy to one or more properly labeled CD or DVD discs.

1. Searchable PDF files are preferred when possible. Table of Contents and any divider pages in these PDF files must be searchable.

2. Digital copies of O&M Manuals must be organized by section.

F. Paper & 3 Ring Binder O&M Manuals: Binders to be BINDERTEK Heavy-Duty Round 3-Ring Archival Binder, 3" Spine or equivalent, as approved by the Owner. Minimum ring size 1”. When multiple binders are used, correlate data into related consistent groupings. Do not overfill binders.

G. Cover: Identify each binder with typed or printed title OPERATION AND MAINTENANCE INSTRUCTIONS; identify title of Project; identify subject matter of contents.

H. Project Directory: Title and address of Project; names, addresses, and telephone numbers of Architect, Consultants, Contractor and subcontractors, with names of responsible parties.

I. Tables of Contents: List every item separated by a divider, using the same identification as on the divider tab; where multiple volumes are required, include all volumes Tables of Contents in each volume, with the current volume clearly identified.

J. Dividers: Provide tabbed dividers for each separate product and system; identify the contents on the divider tab; immediately following the divider tab include a description of product and major component parts of equipment.

K. Text: Manufacturer's printed data, or typewritten data on 24 pound paper.

L. Drawings: Provide with reinforced punched binder tab. Bind in with text; fold larger drawings to size of text pages.

M. Arrangement of Contents: Organize each volume in parts as follows:

1. Project Directory.

2. Table of Contents, of all volumes, and of this volume.

3. Operation and Maintenance Data: Arranged by system, then by product category.

a. Source data.

b. Operation and maintenance data.

c. Field quality control data.

d. Original warranties and bonds.

3.06 WARRANTIES AND BONDS

A. Obtain warranties and bonds, executed in duplicate by responsible Subcontractors, suppliers, and manufacturers, within 10 days after completion of the applicable item of work. Except for items put into use with Owner's permission, leave date of beginning of time of warranty until Date of Substantial completion is determined.

B. Verify that documents are in proper form, contain full information, and when required have been are notarized.

C. Co-execute submittals when required.

D. Retain warranties and bonds until time specified for submittal.

E. Manual: Binders to be BINDERTEK Heavy-Duty Round 3-Ring Archival Binder or equivalent, as approved by the Owner. Minimum ring size 1”. Do not overfill binders.

F. Cover: Identify each binder with typed or printed title WARRANTIES AND BONDS, with title of Project; name, address and telephone number of Contractor and equipment supplier; and name of responsible company principal.

G. Table of Contents: Neatly typed, in the sequence of the Table of Contents of the Project Manual, with each item identified with the number and title of the specification section in which specified, and the name of product or work item.

H. Separate each warranty or bond with index tab sheets keyed to the Table of Contents listing. Provide full information, using separate typed sheets as necessary. List Subcontractor, supplier, and manufacturer, with name, address, and telephone number of responsible principal.

3.07 EVIDENCE OF PAYMENTS & RELEASE OF LIENS

A. Contractor shall submit the following:

1. Contractor's Affidavit of Payment of Debts and Claims, AIA Document G-706. A copy of this Form is bound in the Appendix Section of this manual.

2. Contractor's Affidavit of Release of Liens, AIA Document G-706A, bound in the Appendix Section of this manual, including the following:

   a. Consent of Contractor's Surety to Final Payment, AIA Document G-707, bound in the Appendix Section of this manual.

   b. Contractor's Release or Waiver of Liens.

   c. Separate releases or waivers of lien for Subcontractors, Suppliers, and others with lien rights against Owner's Property, together with list of those parties.

3. Duly sign and execute all Submittals, before delivery to Architect.

3.08 CONTRACTOR'S CLOSEOUT SUBMITTALS TO ARCHITECT

A. Wage Certification: Section 00 7343 and 01 2000.

B. Certificate of Domestic Water Disinfection. See Division 33.

C. Building Official's Certificate of Mechanical & Electrical Inspections.

D. Building Official's Certificate of Occupancy.

3.09 SPARE PART & MAINTENANCE MATERIAL SUBMITTALS TO OWNER

A. All spare parts and extra material are to be delivered to the owner prior to the date of substantial completion. Provide written confirmation of delivery, noting quantity and description as well as storage location. Obtain written acceptance from Owner for receipt of stored items.

B. Specific Requirements: See Specifications Sections.

C. Products: Identical to those included in Project Work.

D. Storage Location: Where directed by Owner.

E. Required Submittals: See Specification Sections.

3.10 FINAL ADJUSTMENT OF ACCOUNTS

A. Submit final statement of accounting to Architect, including the following:

1. Original Contract Sum.

2. Additions and deductions resulting from:

   a. Previous Change Orders.

   b. Adjustments to Cash Allowances

   c. Other adjustments.

d. Deductions for uncompleted Work.

e. Deductions for Reinspection Payments.

3. Total Contract Sum, as adjusted.

4. Previous Payments.

5. Sum remaining due.

B. Architect will prepare and issue final Change Order, reflecting approved adjustments to Contract Sum not previously made by Change Orders.

3.11 FINAL APPLICATION FOR PAYMENT

A. Follow procedures specified in Section 01 2000.

END OF SECTION

PART 1 GENERAL

1.01 SUMMARY

A. Demonstration of products and systems to be commissioned and where indicated in specific specification sections.

B. Training of Owner personnel in operation and maintenance is required to be provided as needed.

1.02 RELATED REQUIREMENTS

A. Section 01 7800 - Closeout Submittals: Operation and maintenance manuals.

D. Other Specification Sections: Additional requirements for demonstration and training.

1.03 SUBMITTALS

A. See Section 01 3000 - Administrative Requirements, for submittal procedures; except:

1. Make all submittals specified in this section, and elsewhere where indicated for commissioning purposes, directly to the Commissioning Authority.

2. Submit one copy to the Commissioning Authority, not to be returned.

3. Make commissioning submittals on time schedule specified by Commissioning Authority.

4. Submittals indicated as "Draft" are intended for the use of the Commissioning Authority in preparation of overall Training Plan; submit in editable electronic format, Microsoft Word 2003 preferred.

B. Draft Training Plans: Owner will designate personnel to be trained; tailor training to needs and skill-level of attendees.

1. Submit to Commissioning Authority for review and inclusion in overall training plan.

2. Submit not less than four weeks prior to start of training.

3. Revise and resubmit until acceptable.

4. Provide an overall schedule showing all training sessions.

5. Include at least the following for each training session:

a. Identification, date, time, and duration.

b. Description of products and/or systems to be covered.

c. Name of firm and person conducting training; include qualifications.

d. Intended audience, such as job description.

e. Objectives of training and suggested methods of ensuring adequate training.

f. Methods to be used, such as classroom lecture, live demonstrations, hands-on, etc.

g. Media to be used, such a slides, hand-outs, etc.

h. Training equipment required, such as projector, projection screen, etc., to be provided by Contractor.

C. Training Manuals: Provide training manual for each attendee; allow for minimum of two attendees per training session.

1. Include applicable portion of O&M manuals.

2. Include copies of all hand-outs, slides, overheads, video presentations, etc., that are not included in O&M manuals.

3. Provide one extra copy of each training manual to be included with operation and maintenance data.

D. Training Reports:

1. Identification of each training session, date, time, and duration.

2. Sign-in sheet showing names and job titles of attendees.

3. List of attendee questions and written answers given, including copies of and references to supporting documentation required for clarification; include answers to questions that could not be answered in original training session.

4. Include Commissioning Authority's formal acceptance of training session.

E. Video Recordings: Submit digital video recording of each demonstration and training session for Owner's subsequent use.

1. Format: USB Flash Drive.

2. Label each with session identification and date.

1.04 QUALITY ASSURANCE

A. Instructor Qualifications: Familiar with design, operation, maintenance and troubleshooting of the relevant products and systems.

1. Provide as instructors the most qualified trainer of those contractors and/or installers who actually supplied and installed the systems and equipment.

2. Where a single person is not familiar with all aspects, provide specialists with necessary qualifications.

PART 2 PRODUCTS - NOT USED

PART 3 EXECUTION

3.01 DEMONSTRATION - GENERAL

A. Demonstrations conducted during system start-up do not qualify as demonstrations for the purposes of this section, unless approved in advance by Owner.

B. Demonstrations conducted during Functional Testing need not be repeated unless Owner personnel training is specified.

C. Demonstration may be combined with Owner personnel training if applicable.

D. Operating Equipment and Systems: Demonstrate operation in all modes, including start-up, shut-down, seasonal changeover, emergency conditions, and troubleshooting, and maintenance procedures, including scheduled and preventive maintenance.

1. Perform demonstrations not less than two weeks prior to Substantial Completion.

2. For equipment or systems requiring seasonal operation, perform demonstration for other season within six months.

E. Non-Operating Products: Demonstrate cleaning, scheduled and preventive maintenance, and repair procedures.

1. Perform demonstrations not less than two weeks prior to Substantial Completion.

3.02 TRAINING - GENERAL

A. Contractor will prepare the Training Plan based on draft plans submitted.

B. Conduct training on-site unless otherwise indicated.

C. Owner will provide classroom and seating at no cost to Contractor.

D. Do not start training until Functional Testing is complete, unless otherwise specified or approved by the Commissioning Authority.

E. Provide training in minimum two hour segments.

F. The Commissioning Authority is responsible for determining that the training was satisfactorily completed and will provide approval forms.

G. Training schedule will be subject to availability of Owner's personnel to be trained; re-schedule training sessions as required by Owner; once schedule has been approved by Owner, failure to conduct sessions according to schedule will be cause for Owner to charge Contractor for personnel "show-up" time.

H. Review of Facility Policy on Operation and Maintenance Data: During training discuss:

1. The location of the O&M manuals and procedures for use and preservation; backup copies.

2. Typical contents and organization of all manuals, including explanatory information, system narratives, and product specific information.

3. Typical uses of the O&M manuals.

I. Product- and System-Specific Training:

1. Review the applicable O&M manuals.

2. For systems, provide an overview of system operation, design parameters and constraints, and operational strategies.

3. Review instructions for proper operation in all modes, including start-up, shut-down, seasonal changeover and emergency procedures, and for maintenance, including preventative maintenance.

4. Provide hands-on training on all operational modes possible and preventive maintenance.

5. Emphasize safe and proper operating requirements; discuss relevant health and safety issues and emergency procedures.

6. Discuss common troubleshooting problems and solutions.

7. Discuss any peculiarities of equipment installation or operation.

8. Discuss warranties and guarantees, including procedures necessary to avoid voiding coverage.

9. Review recommended tools and spare parts inventory suggestions of manufacturers.

10. Review spare parts and tools required to be furnished by Contractor.

11. Review spare parts suppliers and sources and procurement procedures.

J. Be prepared to answer questions raised by training attendees; if unable to answer during training session, provide written response within three days.

END OF SECTION

Soderstrom Architects

Bid / Permit Set

PROJECT MANUAL

Junction City School District

Laurel Elementary School – Seismic Retrofit

1401 Laurel Street, Junction City, Oregon 97448

09/19/2025
SDRA Project No. 24059

1331 NW Lovejoy Street Suite Number 775 | Portland, OR 97209 | Main 503.228.5617 | Fax 503.273.8584 | **sdra.com**

SECTION 02 4100
DEMOLITION

PART 1 GENERAL

1.01 SECTION INCLUDES

A. Building demolition excluding removal of hazardous materials and toxic substances.

B. Selective demolition of built site elements.

C. Selective demolition of building elements for alteration purposes.

D. Abandonment and removal of existing utilities and utility structures.

1.02 RELATED REQUIREMENTS

A. Section 00 3100 - Available Project Information: Existing building survey conducted by Owner; information about known hazardous materials.

B. Section 01 1000 - Summary: Limitations on Contractor's use of site and premises.

C. Section 01 1000 - Summary: Sequencing and staging requirements.

D. Section 01 5000 - Temporary Facilities and Controls: Site fences, security, protective barriers, and waste removal.

E. Section 01 5713 - Temporary Erosion and Sediment Control.

F. Section 01 6000 - Product Requirements: Handling and storage of items removed for salvage and relocation.

G. Section 01 7000 - Execution and Closeout Requirements: Project conditions; protection of bench marks, survey control points, and existing construction to remain; reinstallation of removed products; temporary bracing and shoring.

H. Section 01 7419 - Construction Waste Management and Disposal: Limitations on disposal of removed materials; requirements for recycling.

I. Section 07 0150.19 - Preparation for Re-Roofing: Removal of existing roofing, roof insulation, flashing, trim, and accessories.

1.03 REFERENCE STANDARDS

A. 29 CFR 1926 - Safety and Health Regulations for Construction; Current Edition.

B. NFPA 241 - Standard for Safeguarding Construction, Alteration, and Demolition Operations; 2022, with Errata (2021).

1.04 SUBMITTALS

A. See Section 01 3000 - Administrative Requirements for submittal procedures.

B. Site Plan: Indicate:
   1. Vegetation to be protected.
   2. Areas for temporary construction and field offices.
   3. Areas for temporary and permanent placement of removed materials.

C. Demolition Plan: Submit demolition plan as required by OSHA and local AHJs.
   1. Indicate extent of demolition, removal sequencing, bracing and shoring, and location and construction of barricades and fences.
   2. Summary of safety procedures.
   3. Demolition firm qualifications.

D. Project Record Documents: Accurately record actual locations of capped and active utilities and subsurface construction.

PART 2 PRODUCTS -- NOT USED

PART 3 EXECUTION

3.01 GENERAL PROCEDURES AND PROJECT CONDITIONS

A. Comply with applicable codes and regulations for demolition operations and safety of adjacent structures and the public.
   1. Obtain required permits.
   2. Use of explosives is not permitted.
   3. Take precautions to prevent catastrophic or uncontrolled collapse of structures to be removed; do not allow worker or public access within range of potential collapse of unstable structures.
   4. Provide, erect, and maintain temporary barriers and security devices.
   5. Use physical barriers to prevent access to areas that could be hazardous to workers or the public.
   6. Conduct operations to minimize effects on and interference with adjacent structures and occupants.
   7. Do not close or obstruct roadways or sidewalks without permits from authority having jurisdiction.
   8. Conduct operations to minimize obstruction of public and private entrances and exits. Do not obstruct required exits at any time. Protect persons using entrances and exits from removal operations.
   9. Obtain written permission from owners of adjacent properties when demolition equipment will traverse, infringe upon, or limit access to their property.

B. Do not begin removal until receipt of notification to proceed from Owner.

C. Do not begin removal until built elements to be salvaged or relocated have been removed.

D. Do not begin removal until vegetation to be relocated has been removed and vegetation to remain has been protected from damage.

E. Protect existing structures and other elements to remain in place and not removed.
   1. Provide bracing and shoring.
   2. Prevent movement or settlement of adjacent structures.
   3. Stop work immediately if adjacent structures appear to be in danger.

F. Minimize production of dust due to demolition operations. Do not use water if that will result in ice, flooding, sedimentation of public waterways or storm sewers, or other pollution.

G. Hazardous Materials:
   1. If hazardous materials are discovered during removal operations, stop work and notify Architect and Owner; hazardous materials include regulated asbestos containing materials, lead, PCBs, and mercury.

H. Perform demolition in a manner that maximizes salvage and recycling of materials.
   1. Comply with requirements of Section 01 7419 - Construction Waste Management and Disposal.
   2. Dismantle existing construction and separate materials.
   3. Set aside reusable, recyclable, and salvageable materials; store and deliver to collection point or point of reuse.

I. Partial Removal of Paving and Curbs: Neatly saw cut at right angle to surface.

3.02 EXISTING UTILITIES

A. Coordinate work with utility companies. Notify utilities before starting work, comply with their requirements, and obtain required permits.

B. Protect existing utilities to remain from damage.

C. Do not disrupt public utilities without permit from authority having jurisdiction.

D. Do not close, shut off, or disrupt existing life safety systems that are in use without at least 7 days prior written notification to Owner.

E. Do not close, shut off, or disrupt existing utility branches or take-offs that are in use without at least 3 days prior written notification to Owner.

F. Locate and mark utilities to remain; mark using highly visible tags or flags, with identification of utility type; protect from damage due to subsequent construction, using substantial barricades if necessary.

G. Remove exposed piping, valves, meters, equipment, supports, and foundations of disconnected and abandoned utilities.

H. Prepare building demolition areas by disconnecting and capping utilities outside the demolition zone. Identify and mark, in same manner as other utilities to remain, utilities to be reconnected.

3.03 SELECTIVE DEMOLITION FOR ALTERATIONS

A. Existing construction and utilities indicated on drawings are based on casual field observation and existing record documents only.
   1. Verify construction and utility arrangements are as indicated.
   2. Report discrepancies to Architect before disturbing existing installation.
   3. Beginning of demolition work constitutes acceptance of existing conditions that would be apparent upon examination prior to starting demolition.

B. Separate areas in which demolition is being conducted from areas that remain occupied.
   1. Provide, erect, and maintain temporary dustproof partitions of construction specified in Section 01 5000 in locations indicated on drawings.

C. Maintain weatherproof exterior building enclosure, except for interruptions required for replacement or modifications; prevent water and humidity damage.

D. Remove existing work as indicated and required to accomplish new work.
   1. Remove rotted wood, corroded metals, and deteriorated masonry and concrete; replace with new construction indicated.
   2. Remove items indicated on drawings.

E. Services (Including but not limited to HVAC, Plumbing, Fire Protection, Electrical, and Telecommunications): Remove existing systems and equipment as indicated.
   1. Maintain existing active systems to remain in operation, and maintain access to equipment and operational components.
   2. Where existing active systems serve occupied facilities but are to be replaced with new services, maintain existing systems in service until new systems are complete and ready for service.
   3. See Section 01 1000 - Summary for limitations on outages and required notifications.
   4. Verify that abandoned services serve only abandoned facilities before removal.

F. Protect existing work to remain.
   1. Prevent movement of structure. Provide shoring and bracing as required.
   2. Perform cutting to accomplish removal work neatly and as specified for cutting new work.
   3. Repair adjacent construction and finishes damaged during removal work.
   4. Patch to match new work.

3.04 DEBRIS AND WASTE REMOVAL

A. Remove materials not to be reused on site; comply with requirements of Section 01 7419 - Waste Management.

B. Leave site in clean condition, ready for subsequent work.

C. Clean up spillage and wind-blown debris from public and private lands.

END OF SECTION

This page intentionally left blank

SECTION 03 3000
CAST-IN-PLACE CONCRETE

PART 1 GENERAL

1.01 SECTION INCLUDES

A. Concrete formwork.

B. Floors and slabs on grade.

C. Concrete foundation walls and footings.

D. Concrete foundations and anchor bolts for pre-engineered building.

E. Concrete reinforcement.

F. Joint devices associated with concrete work.

G. Concrete curing.

1.02 RELATED REQUIREMENTS

A. Section 01 3000 - Administrative Requirements

B. Section 07 9200 - Joint Sealants: Products and installation for sealants and joint fillers for saw cut joints and isolation joints in slabs.

1.03 REFERENCE STANDARDS

A. ACI CODE-318 - Building Code Requirements for Structural Concrete and Commentary; 2019 (Reapproved 2022).

B. ACI PRC-211.1 - Selecting Proportions for Normal-Density and High Density-Concrete - Guide; 2022.

C. ACI PRC-302.1 - Guide to Concrete Floor and Slab Construction; 2015.

D. ACI PRC-304 - Guide for Measuring, Mixing, Transporting, and Placing Concrete; 2000 (Reapproved 2009).

E. ACI PRC-305 - Guide to Hot Weather Concreting; 2020.

F. ACI PRC-306 - Guide to Cold Weather Concreting; 2016.

G. ACI PRC-308 - Guide to External Curing of Concrete; 2016.

H. ACI PRC-347 - Guide to Formwork for Concrete; 2014 (Reapproved 2021).

I. ACI SPEC-117 - Specification for Tolerances for Concrete Construction and Materials; 2010 (Reapproved 2015).

J. ACI SPEC-301 - Specifications for Concrete Construction; 2020.

K. ASTM A615/A615M - Standard Specification for Deformed and Plain Carbon-Steel Bars for Concrete Reinforcement; 2022.

L. ASTM C33/C33M - Standard Specification for Concrete Aggregates; 2023.

M. ASTM C39/C39M - Standard Test Method for Compressive Strength of Cylindrical Concrete Specimens; 2023.

N. ASTM C94/C94M - Standard Specification for Ready-Mixed Concrete; 2024.

O. ASTM C109/C109M - Standard Test Method for Compressive Strength of Hydraulic Cement Mortars (Using 50 mm [2 in.] Cube Specimens); 2023.

P. ASTM C143/C143M - Standard Test Method for Slump of Hydraulic-Cement Concrete; 2020.

Q. ASTM C150/C150M - Standard Specification for Portland Cement; 2022.

R. ASTM C157/C157M - Standard Test Method for Length Change of Hardened Hydraulic-Cement Mortar and Concrete; 2017.

S. ASTM C171 - Standard Specification for Sheet Materials for Curing Concrete; 2020.

T. ASTM C173/C173M - Standard Test Method for Air Content of Freshly Mixed Concrete by the Volumetric Method; 2023.

U. ASTM C260/C260M - Standard Specification for Air-Entraining Admixtures for Concrete; 2010a (Reapproved 2016).

V. ASTM C309 - Standard Specification for Liquid Membrane-Forming Compounds for Curing Concrete; 2019.

W. ASTM C494/C494M - Standard Specification for Chemical Admixtures for Concrete; 2019, with Editorial Revision (2022).

X. ASTM C618 - Standard Specification for Coal Ash and Raw or Calcined Natural Pozzolan for Use in Concrete; 2023, with Editorial Revision.

Y. ASTM C881/C881M - Standard Specification for Epoxy-Resin-Base Bonding Systems for Concrete; 2020a.

Z. ASTM C1059/C1059M - Standard Specification for Latex Agents for Bonding Fresh to Hardened Concrete; 2021.

AA. ASTM C1107/C1107M - Standard Specification for Packaged Dry, Hydraulic-Cement Grout (Nonshrink); 2020.

BB. ASTM C1116/C1116M - Standard Specification for Fiber-Reinforced Concrete; 2023.

CC. ASTM C1240 - Standard Specification for Silica Fume Used in Cementitious Mixtures; 2020.

DD. ASTM C1315 - Standard Specification for Liquid Membrane-Forming Compounds Having Special Properties for Curing and Sealing Concrete; 2019.

EE. ASTM C1602/C1602M - Standard Specification for Mixing Water Used in the Production of Hydraulic Cement Concrete; 2022.

FF. ASTM D2103 - Standard Specification for Polyethylene Film; 2023a.

GG. ASTM E1643 - Standard Practice for Selection, Design, Installation, and Inspection of Water Vapor Retarders Used in Contact with Earth or Granular Fill Under Concrete Slabs; 2018a.

HH. ASTM E1745 - Standard Specification for Plastic Water Vapor Retarders Used in Contact with Soil or Granular Fill under Concrete Slabs; 2017 (Reapproved 2023).

II. ICRI 310.2R - Selecting and Specifying Concrete Surface Preparation for Sealers, Coatings, Polymer Overlays, and Concrete Repair; 2013.

1.04 SUBMITTALS

A. See Section 01 3000 - Administrative Requirements for submittal procedures.

B. Product Data: Submit manufacturers' data on manufactured products showing compliance with specified requirements and installation instructions.
   1. For curing compounds, provide data on method of removal in the event of incompatibility with floor covering adhesives.

C. Mix Design: Submit proposed concrete mix design.
   1. Indicate proposed mix design complies with requirements of ACI SPEC-301, Section 4 - Concrete Mixtures.
   2. Indicate proposed mix design complies with requirements of ACI CODE-318, Chapter 5 - Concrete Quality, Mixing and Placing.
   3. Indicate proposed mix design complies with fiber reinforcing manufacturer's written recommendations.
   4. Indicate proposed mix design complies with admixture manufacturer's written recommendations.
   5. Document materials sources for principal constituents.
   6. Provide test data emonstrating compliance with shrinkage or initial crack requirements.

7. Propose alternate design mixtures when characteristics of materials, Project conditions, weather, test results, or other circumstances warrant adjustments as provided for substitutions in the Work.
8. Indicate amount of air entrainment.
9. Indicate hot and cold weather procedures.
10. Indicate location and intended use.

D. Steel Reinforcement Shop Drawings: Placing drawings that detail fabrication, bending, and placement. Include bar sizes, lengths, material, grade, bar schedules, stirrup spacing, bent bar diagrams, bar arrangement, splices and laps, mechanical connections, tie spacing, hoop spacing, and supports for concrete reinforcement. The steel reinforcement detailer shall generate all shop drawing bending and installation details from the structural and architectural drawings and specifications. The use f reproductions or photocopies of the contract drawings shall not be permitted.
   1. Provide details of fabrication, bending, and placement, prepared according to ACI 315, "Details and Detailing of Concrete Reinforcement." Include special reinforcement required for openings through concrete structures.
   2. Provide Steel Reinforcing Mill Certificates: For information and record, submit steel producer’s certificates of mill tests for reinforcing steel.
   3. Shop drawing re-submittals shall clearly identify all revisions to previous submittals.
      a. Heavy ink clouded outlines (revision clouds) shall be drawn around revised areas of individual sheets.
      b. Architect/Engineer will not review information outside of revision clouds on resubmitted drawings.

E. Construction Joint Layout: Indicate proposed construction joints required to construct the structure.
   1. Location of construction joints other than those specifically shown on the Drawings is subject to approval of the Architect.

F. Welding Certificates: If welding of reinforcing is used.

G. Location of construction joints other than those specifically shown on the Drawings is subject to approval of

H. Submit schedule of concrete placement operations before commencing Work, show on one or more plans or elevations, locations of construction, contraction and expansion joints.

I. Test Reports: Submit report for each test or series of tests specified.

J. Project Record Documents: Accurately record actual locations of embedded utilities and components that will be concealed from view upon completion of concrete work.

K. Warranty: Submit manufacturer warranty and ensure forms have been completed in Owner's name and registered with manufacturer.

1.05 QUALITY ASSURANCE

A. Perform work of this section in accordance with ACI SPEC-301 and ACI CODE-318.

B. Follow recommendations of ACI PRC-305 when concreting during hot weather.

C. Follow recommendations of ACI PRC-306 when concreting during cold weather.

D. For slabs required to include moisture vapor reducing admixture (MVRA), do not proceed with placement unless manufacturer's representative is present for every day of placement.

E. Concrete Producer Qualifications:
   1. Company specializing in manufacturing ready-mixed concrete products conforming to ASTM C94.
   2. Manufacturer certified according to NRMCA’s “Certification of Ready Mixed Concrete Production Facilities".

F. Installer Qualifications:

1. Company specializing in work of this Section.
2. Able to demonstrate minimum of 5 years documented experience in successful quality work of comparable scope and quality when requested by the Architect.

G. Preinstallation Conference: Conduct conference at Project site to comply with requirements in 01 3000 Administrative Requirements.
1. Before submitting design mixtures, review concrete design mixture and examine procedures for ensuring quality of concrete materials. Require representatives of each entity directly concerned with cast-in-place concrete to attend, including the following:
a. Owner's representative.
b. Architect and Structural Engineer
c. Contractor's superintendent.
d. Independent testing agency responsible for concrete design mixes and floor slab flatness and levelness measurement.
e. Ready-mix concrete manufacturer.
f. Concrete subcontractor, including supervisor.

1.06 WARRANTY

A. See Section 01 7800 - Closeout Submittals for additional warranty requirements.

B. Slabs with Porosity Inhibiting Admixture (PIA) or Moisture Vapor Reducing Admixture (MVRA): Provide warranty to cover cost of flooring failures due to moisture migration from slabs for life of the concrete.
1. Include cost of repair or removal of failed flooring, placement of topical moisture remediation system, and replacement of flooring with comparable flooring system.

C. Moisture Emission-Reducing Curing and Sealing Compound, Membrane-Forming: Provide warranty to cover cost of flooring delamination failures for 20 years.
1. Include cost of repair or removal of failed flooring, remediation with a moisture vapor impermeable surface coating, and replacement of flooring with comparable flooring system.

PART 2 PRODUCTS

2.01 FORMWORK

A. Formwork Design and Construction: Comply with guidelines of ACI PRC-347 to provide formwork that will produce concrete complying with tolerances of ACI SPEC-117.

B. Form Materials: Contractor's choice of standard products with sufficient strength to withstand hydrostatic head without distortion in excess of permitted tolerances.
1. Form Facing for Exposed Finish Concrete: Contractor's choice of materials that will provide smooth, stain-free final appearance.
2. Form Coating: Release agent that will not adversely affect concrete or interfere with application of coatings.
3. Form Ties: Cone snap type that will leave no metal within 1-1/2 inches of concrete surface.

2.02 REINFORCEMENT MATERIALS

A. Reinforcing Steel: ASTM A615/A615M, Grade 60 (60,000 psi).
1. Type: Deformed billet-steel bars.
2. Finish: Unfinished, unless otherwise indicated.

B. Reinforcement Accessories:
1. Tie Wire: Annealed, minimum 16 gauge, 0.0508 inch.
2. Chairs, Bolsters, Bar Supports, Spacers: Sized and shaped for adequate support of reinforcement during concrete placement.
3. Provide galvanized, plastic, or plastic coated steel components for placement within 1-1/2 inches of weathering surfaces.

C. Fabricaation:
1. Cut and bend bars at room temperature. Do not heat bars prior to cutting or bending.

2. Field fabrication will be allowed only if the Contractor has equipment to properly fabricate steel.

2.03 CONCRETE MATERIALS

A. Cement: ASTM C150/C150M, Type I - Normal Portland type.
   1. Acquire cement for entire project from same source.

B. Fine and Coarse Aggregates: ASTM C33/C33M.
   1. Acquire aggregates for entire project from same source.

C. Fly Ash: ASTM C618, Class C or F.

D. Calcined Pozzolan: ASTM C618, Class N.

E. Silica Fume: ASTM C1240, proportioned in accordance with ACI PRC-211.1.

F. Water: ASTM C1602/C1602M; clean, potable, and not detrimental to concrete.

G. Early Age Crack-Control Fiber Reinforcement: ASTM C1116/C1116M.
   1. Fiber Type: Alkali-resistant synthetic.
   2. Fiber Length: 0.75 inch, nominal.
   3. Products:
      a. Fibermesh; Fibermesh 150e3: www.fibermesh.com/#sle.
      b. GCP Applied Technologies; SINTA F19: www.gcpat.com/#sle.
      c. Substitutions: See Section 01 6000 - Product Requirements.

2.04 ADMIXTURES

A. Do not use chemicals that will result in soluble chloride ions in excess of 0.1 percent by weight of cement.

B. Air Entrainment Admixture: ASTM C260/C260M.

C. High Range Water Reducing and Retarding Admixture: ASTM C494/C494M Type G.

D. Water Reducing and Accelerating Admixture: ASTM C494/C494M Type E.

E. Retarding Admixture: ASTM C494/C494M Type B.

F. Water Reducing Admixture: ASTM C494/C494M Type A.

G. Moisture Vapor Reducing Admixture (MVRA): Liquid, inorganic admixture free of volatile organic compounds (VOCs). Closes capillary systems formed during concrete curing to reduce moisture vapor emission and transmission. Reduces concrete shrinkage with no adverse effect on concrete properties or applied flooring.
   1. Provide admixture in slabs to receive adhesively applied flooring.
   2. Concrete Shrinkage Reduction at 28 Days: 35 percent, minimum, when compared to mix design without MVRA and both tested according to ASTM C157/C157M.
   3. VOC Content: Zero.

H. Plasticizing and Retarding Admixture: ASTM C1017/C1017M, Type II.

I. Crack Reducing Admixture: ASTM C494/C494M, Type S.

2.05 ACCESSORY MATERIALS

A. Underslab Vapor Retarder:
   1. Sheet Material: ASTM E1745, Class A; stated by manufacturer as suitable for installation in contact with soil or granular fill under concrete slabs. Single-ply polyethylene is prohibited.
   2. Accessory Products: Vapor retarder manufacturer's recommended tape, adhesive, mastic, prefabricated boots, etc., for sealing seams and penetrations.
   3. Products:
      a. Henry Company; Moistop Ultra 10: www.henry.com/#sle.
      b. W. R. Meadows, Inc; PERMINATOR Class A - 15 mils (0.38 mm): www.wrmeadows.com/#sle.
      c. Stego Industries, LLC; Stego Wrap Class A: www.stegoindustries.com.

d. Substitutions: See Section 01 6000 - Product Requirements.

B. Non-Shrink Cementitious Grout: Premixed compound consisting of nonmetallic aggregate, cement, water reducing and plasticizing agents.
1. Grout: Comply with ASTM C1107/C1107M.
2. Minimum Compressive Strength at 48 Hours, ASTM C109/C109M: 2,000 pounds per square inch.

2.06 BONDING AND JOINTING PRODUCTS

A. Latex Bonding Agent: Non-redispersable acrylic latex, complying with ASTM C1059/C1059M, Type II.

B. Epoxy Bonding System:
1. Complying with ASTM C881/C881M and of Type required for specific application.

C. Slab Isolation Joint Filler: 1/2-inch thick, height equal to slab thickness, with removable top section forming 1/2-inch deep sealant pocket after removal.

2.07 CURING MATERIALS

A. Evaporation Reducer: Liquid thin-film-forming compound that reduces rapid moisture loss caused by high temperature, low humidity, and high winds; intended for application immediately after concrete placement.
1. Products:
a. Dayton Superior Corporation; Sure Film: www.daytonsuperior.com/#sle.
b. Euclid Chemical Company ; EUCOBAR: www.euclidchemical.com/#sle.
c. Kaufman Products Inc; VaporAid: www.kaufmanproducts.net/#sle.
d. Nox-Crete Inc; Monofilm: www.nox-crete.com/#sle.
e. W. R. Meadows, Inc ; Evapre or Evapre-RTU: www.wrmeadows.com/#sle.
f. Substitutions: See Section 01 6000 - Product Requirements.

B. Curing and Sealing Compound, Moisture Emission-Reducing, Membrane-Forming: Clear, liquid sealer for application to newly-placed concrete; capable of providing adequate bond for flooring adhesives, initially and over the long term; with sufficient moisture vapor impermeability to prevent deterioration of flooring adhesives due to moisture emission.
1. Use this product to cure and seal all slabs to receive adhesively applied flooring or roofing.
2. Comply with ASTM C309 and ASTM C1315 Type I Class A.
3. VOC Content: Less than 100 g/L.

C. Moisture-Retaining Sheet: ASTM C171.

D. Absorptive Cover: AASHTO M 182, Class 2, burlap cloth made from jute or kenaf, weighing approximately 9 oz./sq. yd. (305 g/sq. m) when dry.

E. Water: Potable, not detrimental to concrete.

2.08 CONCRETE MIX DESIGN

A. Proportioning Normal Weight Concrete: Comply with ACI PRC-211.1 recommendations.

B. Admixtures: Add acceptable admixtures as recommended in ACI PRC-211.1 and at rates recommended or required by manufacturer.

C. Fiber Reinforcement: Add to mix at rate of 1.5 pounds per cubic yard, or as recommended by manufacturer for specific project conditions.

D. Normal Weight Concrete:
1. Compressive Strength, when tested in accordance with ASTM C39/C39M at 28 days: As indicated on drawings.
2. Fly Ash Content: Maximum 15 percent of cementitious materials by weight.
3. Calcined Pozzolan Content: Maximum 10 percent of cementitious materials by weight.
4. Silica Fume Content: Maximum 5 percent of cementitious materials by weight.
5. Water-Cement Ratio: Maximum 40 percent by weight.

6. Total Air Content: at areas exposed to weather, 4 percent, determined in accordance with ASTM C173/C173M.
7. Maximum Slump: 3 inches.
8. Maximum Aggregate Size: 3/4 inch.

2.09 MIXING

A. Transit Mixers: Comply with ASTM C94/C94M.

B. Adding Water: If concrete arrives on-site with slump less than suitable for placement, do not add water that exceeds the maximum water-cement ratio or exceeds the maximum permissible slump.

C. Do not use shrinkage-reducing admixture (SRA) in same concrete batch with MVRA or PIA.

PART 3 EXECUTION

3.01 PREPARATION

A. Formwork: Comply with requirements of ACI SPEC-301. Design and fabricate forms to support all applied loads until concrete is cured and for easy removal without damage to concrete.

B. Verify that forms are clean and free of rust before applying release agent.

C. Coordinate placement of embedded items with erection of concrete formwork and placement of form accessories.

D. Prepare existing concrete surfaces to be repaired according to ICRI 310.2R, _____.

E. Where new concrete is to be bonded to previously placed concrete, prepare existing surface by cleaning and applying bonding agent in according to bonding agent manufacturer's instructions.
   1. Use epoxy bonding system for bonding to damp surfaces, for structural load-bearing applications, and where curing under humid conditions is required.
   2. Use latex bonding agent only for non-load-bearing applications.

F. In locations where new concrete is doweled to existing work, drill holes in existing concrete, insert steel dowels and pack solid with non-shrink grout.

G. Interior Slabs on Grade: Install vapor retarder under interior slabs on grade. Comply with ASTM E1643. Lap joints minimum 6 inches. Seal joints, seams and penetrations watertight with manufacturer's recommended products and follow manufacturer's written instructions. Repair damaged vapor retarder before covering.

3.02 INSTALLING REINFORCEMENT AND OTHER EMBEDDED ITEMS

A. Comply with requirements of ACI SPEC-301. Clean reinforcement of loose rust and mill scale, and accurately position, support, and secure in place to achieve not less than minimum concrete coverage required for protection.

B. Construct steel reinforcement in accordance with ACI 301. Comply with CRSI's recommended practice for "Placing Reinforcing Bars", for details and methods of reinforcement placement and supports, and as herein specified.

C. Accurately position, support, and secure reinforcement against displacement by formwork, construction, or concrete placement operations. Locate and support reinforcing with metal chairs, runners, bolsters,

D. Arrange, space, and securely tie bars and bar supports to hold reinforcement in position during concrete placement operations. Set wire ties so ends are directed into concrete, not toward exposed concrete surfaces.

E. Lap all reinforcing bars per the Typical Lap Splice Length Schedule in the General Structural Notes on the structural drawings, unless otherwise noted. Mechanical splices noted on the Drawings shall be Dayton Bar-Grip splices or approved with a current ICC Approval Report.

F. Refer to typical details for disposition of corner bars and bars in small wall sections.

G. Provide hooked dowels from footings to match vertical wall reinforcing, UNO.

H. Minimum Concrete Cover: As indicated on the Drawings and as indicated in the General Structural Notes on the Drawings.

I. Install welded wire reinforcement in maximum possible lengths, and offset end laps in both directions. Splice laps with tie wire.

J. Verify that anchors, seats, plates, reinforcement and other items to be cast into concrete are accurately placed, positioned securely, and will not interfere with concrete placement.

3.03 PLACING CONCRETE

A. Place concrete in accordance with ACI PRC-304.

B. Place concrete for floor slabs in accordance with ACI PRC-302.1.

C. Notify Structural Engineer not less than 24 hours prior to commencement of placement operations.

D. Ensure reinforcement, inserts, embedded parts, and formed construction joint devices will not be disturbed during concrete placement.

E. Finish floors level and flat, unless otherwise indicated, within the tolerances specified below.

F. Cold-Weather Placement: Comply with ACI 306.1 and as follows. Protect concrete work from physical damage or reduced strength that could be caused by frost, freezing actions, or low temperatures.

G. When average high and low temperature is expected to fall below 40 deg F (4.4 deg C) for three successive days, maintain delivered concrete mixture temperature within the temperature range required by ACI 301.
   1. Do not use frozen materials or materials containing ice or snow. Do not place concrete on frozen subgrade or on subgrade containing frozen materials.
   2. Do not use calcium chloride, salt, or other materials containing antifreeze agents or chemical accelerators, unless otherwise specified and approved in mixture designs.

H. Hot-Weather Placement: Comply with ACI 301 and as follows: Maintain concrete temperature below 90 deg F (32 deg C) at time of placement. Chilled mixing water or chopped ice may be used to control temperature, provided water equivalent of ice is calculated to total amount of mixing water. Using liquid nitrogen to cool concrete is Contractor's option.

I. Fog-spray forms, steel reinforcement, and subgrade just before placing concrete. Keep subgrade moisture uniform without standing water, soft spots, or dry areas.

3.04 COMPACTION

A. Vibrate all concrete or work by hand where vibration cannot be used to assure close contact with all surfaces of the forms and reinforcement. Vibrate for sufficient duration to accomplish thorough compaction and complete embedment of reinforcement but not long enough to cause separation of the mix.

B. Thorough and effective consolidation of the concrete is most important to produce the intended results. Surface discontinuities normally acceptable for structural concrete are not tolerable for architectural type of work. Small bug holes and other discontinuities must be minimized.

C. Provide either motor-in-head type vibrator with 180-cycle generators or 2-1/2 horsepower motor-on-shaft type vibrator of length required for the purpose. Motor-in-head units with 60-cycle power or similar sources will not be allowed. The vibrator shall be subject to the approval of the Architect. Minimum frequency shall be 10,000 impulses per minute. The Contractor shall thoroughly familiarize himself with all requirements and discussion of the vibrator selection included in ACI PRC-309. General use of vibrators for this construction shall have heads from 2-1/4" to 2-5/8" diameter and length of 16".

3.05 SLAB JOINTING

A. Locate joints as indicated on drawings.

B. Anchor joint fillers and devices to prevent movement during concrete placement.

C. Isolation Joints: Use preformed joint filler with removable top section for joint sealant, total height equal to thickness of slab, set flush with top of slab.

D. Construction Joints: Install so strength and appearance of concrete are not impaired, at locations indicated or as approved by Architect.
   1. Place joints perpendicular to main reinforcement. Continue reinforcement across construction joints, only as noted in the Structural Drawings. Do not continue reinforcement through sides of strip placements of floors and slabs.
   2. Form keyed joints as indicated. Embed keys at least 1-1/2 inches into concrete.
   3. Contraction Joints in Slabs-on-Grade: Tool or saw weakened-plane contraction joints, sectioning concrete into areas as indicated. Construct contraction joints to depth as shown on the Structural Drawings as follows: Sawed Joints: Create contraction joints with power saws as indicated below. Cut 1/8-inch- wide joints into concrete when cutting action will not tear, abrade, or otherwise damage surface and before concrete develops random contraction cracks.
      a. Equipment Control Joint Saw: "Soff-Cut System," early-entry dry-cut saw with Skid Plate, by Soff-Cut. 1112 Olympic Drive, Corona, CA 92881 909-272-2330.
      b. Comply with the Soff-Cut instructions for the SOFF-CUT System, except as noted below.
      c. Troweled Finish: Install cuts at each joint location no earlier than 4 hours and no later than 12 hours after concrete placement.
      d. Remove debris in path of cut and under Skid Plate before cutting. Skid Plate must remain flat on surface.
      e. Use Soff-Cut blades and Skid Plates, using a new Skid Plate with each new blade.
      f. Install Soff-Cut joint protector at saw-cut intersection prior to cross-cut.
      g. Remove dry powder without disturbing finish.
      h. Avoid traffic across saw cut until sufficient strength is gained to protect joint edges.
      i. Coordinate with Work of Division 03 Section “Polished Concrete Finishing” for placement of contraction joints within areas of special finish concrete work.

E. Isolation Joints in Slabs-on-Grade: After removing formwork, install joint-filler strips at slab junctions with vertical surfaces, such as column pedestals, foundation walls, grade beams, and other locations, as indicated.
   1. Extend joint-filler strips full width and depth of joint, terminating flush with finished concrete surface, unless otherwise indicated.
   2. Terminate full-width joint-filler strips not less than 1/2 inch or more than 1 inch below finished concrete surface where joint sealants, specified in Section 07 92 00 - Joint Sealants are indicated.
   3. Install joint-filler strips in lengths as long as practicable. Where more than one length is required, lace or clip sections together.

3.06 FLOOR FLATNESS AND LEVELNESS TOLERANCES

A. General: Levelness requirements do not apply where sloped surface is required.

B. Flat and Level: Comply with the following requirements, as evaluated by ASTM E1155.

C. Maximum Variation of Surface Flatness:
   1. Exposed Concrete Floors: 1/4 inch in 10 feet.
   2. Under Seamless Resilient Flooring: 1/4 inch in 10 feet.
   3. Under Carpeting: 1/4 inch in 10 feet.

D. Correct the slab surface if tolerances are less than specified.

E. Correct defects by grinding or by removal and replacement of the defective work. Areas requiring corrective work will be identified. Re-measure corrected areas by the same process.

3.07 CONCRETE FINISHING

A. Repair surface defects, including tie holes, immediately after removing formwork.

B. Unexposed Form Finish: Rub down or chip off fins or other raised areas 1/4 inch or more in height.

C. Concrete Slabs: Finish to requirements of ACI PRC-302.1 and as follows:
   1. Surfaces to Receive Thin Floor Coverings: "Steel trowel" as described in ACI PRC-302.1; thin floor coverings include carpeting, resilient flooring, seamless flooring, and thin set ceramic tile.
   2. Other Surfaces to Be Left Exposed: Trowel as described in ACI PRC-302.1, minimizing burnish marks and other appearance defects.

D. In areas with floor drains, maintain floor elevation at walls; pitch surfaces uniformly to drains at 1:100 nominal.

3.08 CURING AND PROTECTION

A. Comply with requirements of ACI PRC-308. Immediately after placement, protect concrete from premature drying, excessively hot or cold temperatures, and mechanical injury.

B. Maintain concrete with minimal moisture loss at relatively constant temperature for period necessary for hydration of cement and hardening of concrete.
   1. Normal concrete: Not less than seven days.

C. Cure concrete according to ACI 308.1 by one or a combination of the following methods, maintaining concrete with minimal moisture loss at relatively constant temperature for period necessary for hydration of cement and hardening of concrete.
   1. Normal concrete: Total curing period not less than seven days.
   2. High early strength concrete: Total curing period not less than 4 days.

D. Formed Surfaces: Cure formed concrete surfaces. If forms remain during curing period, moist cure after oosening forms. If removing forms before end of curing period, continue curing for the remainder of the curing period.

E. Unformed Surfaces: Begin curing immediately after finishing concrete. Cure unformed surfaces, including floors and slabs, concrete floor toppings, and other surfaces.

F. Surfaces Not in Contact with Forms:
   1. Initial Curing: Start as soon as free water has disappeared and before surface is dry. Keep continuously moist for not less than three days by water ponding, water-saturated sand, water-fog spray, or saturated burlap.
      a. Ponding: Maintain 100 percent coverage of water over floor slab areas, continuously for 4 days.
      b. Spraying: Spray water over floor slab areas and maintain wet.
      c. Saturated Burlap: Saturate burlap-polyethylene and place burlap-side down over floor slab areas, lapping ends and sides; maintain in place.
   2. Final Curing: Begin after initial curing but before surface is dry.
      a. Moisture-Retaining Sheet: Lap strips not less than 3 inches and seal with waterproof tape or adhesive; secure at edges.

3.09 FIELD QUALITY CONTROL

A. An independent testing agency will perform field quality control tests, as specified in Section 01 4000 - Quality Requirements.

B. Provide free access to concrete operations at project site and cooperate with appointed firm.

C. Submit proposed mix design of each class of concrete to inspection and testing firm for review prior to commencement of concrete operations.

D. Tests of concrete and concrete materials may be performed at any time to ensure compliance with specified requirements.

E. Take one additional test cylinder during cold weather concreting, cured on job site under same conditions as concrete it represents.

F. Slab Testing: Cooperate with manufacturer of specified moisture vapor reducing admixture (MVRA) to allow access for sampling and testing concrete for compliance with warranty requirements.

G. Test Results: The testing agency shall report test results in writing to Architect, Contractor, ready-mix producer, Structural Engineer, Owner, and other offices as directed by the Architect within 24 hours of test. Such reports shall be completely filled out before submittal.

3.10 DEFECTIVE CONCRETE

A. Test Results: The testing agency shall report test results in writing to Architect and Contractor within 24 hours of test.

B. Defective Concrete: Concrete not complying with required lines, details, dimensions, tolerances or specified requirements.

C. Repair or replacement of defective concrete will be determined by the Architect. The cost of additional testing shall be borne by Contractor when defective concrete is identified.

D. Do not patch, fill, touch-up, repair, or replace exposed concrete except upon express direction of Architect for each individual area.

3.11 PROTECTION

A. Do not permit traffic over unprotected concrete floor surface until fully cured.

B. Cover fresh concrete with plywood where exposed to public, pedestrian, or animal traffic.

END OF SECTION

This page intentionally left blank

SECTION 04 0100
MAINTENANCE OF MASONRY

PART 1 GENERAL

1.01 SECTION INCLUDES

A. Water cleaning of masonry surfaces.

B. Replacement of masonry units.

C. Repointing mortar joints.

D. Repair of damaged masonry.

E. Retrofitting masonry veneer construction with brick ties and weeps.

1.02 RELATED REQUIREMENTS

A. Section 04 2613 - Masonry Veneer: Brick masonry units. Mortar and grout.

1.03 REFERENCE STANDARDS

A. TMS 402/602 - Building Code Requirements and Specification for Masonry Structures; 2022, with Errata.

1.04 ADMINISTRATIVE REQUIREMENTS

A. Preinstallation Meeting: Convene one week prior to commencing work of this section.
   1. Require attendance of parties directly affecting work of this section.
   2. Review conditions of installation, installation procedures, and coordination with related work.

1.05 SUBMITTALS

A. See Section 01 3000 - Administrative Requirements, for submittal procedures.

B. Product Data: Provide data on cleaning compounds.

C. Samples: Submit four samples of decorative block, face brick, and stone units to illustrate matching color, texture and extremes of color range.

D. Manufacturer's Instructions: For cleaning materials, indicate special procedures, conditions requiring special attention.

1.06 QUALITY ASSURANCE - MASONRY WORK

A. Comply with provisions of TMS 402/602, except where exceeded by requirements of Contract Documents.

B. Restorer: Company specializing in masonry restoration with minimum three years of documented experience.

1.07 MOCK-UPS

A. See Section 01 4000 - Quality Requirements for additional requirements.

B. Restore and repoint an existing masonry wall area sized 8 feet long by 6 feet high; include in mock-up area instances of mortar, accessories, wall openings, and flashings.

C. Clean a 10 ft by 10 ft panel of wall to determine extent of cleaning.

D. Locate where directed.

E. Mock-up may remain as part of the Work.

1.08 FIELD CONDITIONS - MASONRY WORK

A. Cold and Hot Weather Requirements: Comply with requirements of TMS 402/602 or applicable building code, whichever is more stringent.

B. Do not blast clean or use process creating dust, dirt, when wind is over 10 mph.

1.09 WARRANTY

A. See Section 01 7800 - Closeout Submittals for additional warranty requirements.

B. Warranty: Provide 5-year warranty for CFRP system design, installation, bond to the substrate, and interlaminar bond, as well as mechanical property retention and fabric-resin compatibility, commencing on Date of Substantial Completion. Complete forms in Owner's name and register with warrantor.

PART 2 PRODUCTS

2.01 MANUFACTURERS

A. Restoration and Cleaning Chemicals:
   1. Diedrich Technologies, Inc; 202 New Masonry Detergent: www.diedrichtechnologies.com/#sle.
   2. PROSOCO; ReVive: www.prosoco.com/#sle.

2.02 CLEANING MATERIALS

A. Cleaning Agent: Detergent type.

2.03 RETROFIT ACCESSORIES

A. Description:
   1. Retrofit Wall Ties: Refer to structural drawings for type, size and placement requirements.

2.04 MORTAR MATERIALS

A. Comply with requirements of Section 04 2613 - Masonry Veneer.

2.05 MASONRY MATERIALS

A. Brick: Section 04 2613

PART 3 EXECUTION

3.01 EXAMINATION

A. Verify that surfaces to be cleaned are ready for work of this section.

3.02 PREPARATION

A. Protect surrounding elements from damage due to restoration procedures.

B. Carefully remove and store removable items located in areas to be restored, including fixtures, fittings, finish hardware, and accessories; reinstall upon completion.

C. Separate areas to be protected from restoration areas using means adequate to prevent damage.

D. Cover existing landscaping with tarpaulins or similar covers.

E. Mask immediately adjacent surfaces with material that will withstand cleaning and restoration procedures.

F. Close off adjacent occupied areas with dust proof and weatherproof partitions.

G. Protect roof membrane and flashings from damage with 1/2 inch plywood laid on roof surfaces over full extent of work area and traffic route.

H. When using cleaning methods that involve water or other liquids, install drainage devices to prevent runoff over adjacent surfaces unless those surfaces are impervious to damage from runoff.

I. Do not allow cleaning runoff to drain into sanitary or storm sewers.

3.03 PREPARATION - RETROFIT ACCESSORIES

A. Demolition:
   1. See Section 02 4100 - Demolition for additional requirements.
   2. Demolish all deteriorated material from area to be retrofitted.

B. Removal:
   1. See Section 02 4100 - Demolition for additional requirements.

C. Replacement:
   1. Replace structural components as needed.

3.04 INSTALLATION - RETROFIT ACCESSORIES

3.05 REBUILDING

A. Cut out damaged and deteriorated masonry with care in a manner to prevent damage to any adjacent remaining materials.

B. Support structure as necessary in advance of cutting out units.

C. Build in new units following procedures for new work specified in other section(s).

D. Mortar Mix: Colored and proportioned to match existing work.

E. Ensure that anchors are correctly located and built in.

F. Install built in masonry work to match and align with existing, with joints and coursing true and level, faces plumb and in line. Build in all openings, accessories and fittings.

3.06 REPOINTING

A. Perform repointing prior to cleaning masonry surfaces.

B. Cut out loose or disintegrated mortar in joints to minimum 1/2 inch depth or until sound mortar is reached.

C. Use power tools only after test cuts determine no damage to masonry units will result.

D. Do not damage masonry units.

E. When cutting is complete, remove dust and loose material by brushing.

F. Premoisten joint and apply mortar. Pack tightly in maximum 1/4 inch layers. Form a smooth, compact concave joint to match existing.

G. Moist cure for 72 hours.

3.07 CLEANING EXISTING MASONRY

A. Cleaning Detergent: Spray clean masonry surfaces at all locations with cleaning agent in accordance with the manufacturer's instructions. Saturate masonry with clean water and flush loose mortar and dirt.

3.08 CLEANING NEW MASONRY

A. Verify mortar is fully set and cured.

B. Clean surfaces and remove large particles with wood scrapers, brass or nylon wire brushes.

C. Scrub walls with cleaning agent solution using stiff brush. Thoroughly rinse and wash off cleaning solution, dirt and mortar crumbs using clean, pressurized water.

D. Protect area below cleaning operation and keep _____ type masonry soaked with water and flushed free of acid and dissolved mortar continuously for duration of cleaning.

3.09 CLEANING

A. Immediately remove stains, efflorescence, or other excess resulting from the work of this section.

B. Remove excess mortar, smears, and droppings as work proceeds and upon completion.

C. Clean surrounding surfaces.

END OF SECTION

This page intentionally left blank

SECTION 04 2613
MASONRY VENEER

PART 1 GENERAL

1.01 SECTION INCLUDES

A. Clay facing brick.

B. Mortar.

C. Reinforcement and anchorage.

D. Flashings.

E. Accessories.

1.02 RELATED REQUIREMENTS

A. Section 04 0100 - Maintenance of Masonry.

B. Section 06 1000 - Rough Carpentry: Wood stud backup for masonry veneer.

C. Section 07 6200 - Sheet Metal Flashing and Trim: Through-wall masonry flashings.

D. Section 07 9200 - Joint Sealants: Sealing control and expansion joints.

1.03 REFERENCE STANDARDS

A. ASTM A580/A580M - Standard Specification for Stainless Steel Wire; 2023.

B. ASTM A615/A615M - Standard Specification for Deformed and Plain Carbon-Steel Bars for Concrete Reinforcement; 2022.

C. ASTM A951/A951M - Standard Specification for Steel Wire for Masonry Joint Reinforcement; 2022.

D. ASTM C67/C67M - Standard Test Methods for Sampling and Testing Brick and Structural Clay Tile; 2023.

E. ASTM C150/C150M - Standard Specification for Portland Cement; 2022.

F. ASTM C216 - Standard Specification for Facing Brick (Solid Masonry Units Made from Clay or Shale); 2022.

G. ASTM C270 - Standard Specification for Mortar for Unit Masonry; 2019a, with Editorial Revision.

H. ASTM C979/C979M - Standard Specification for Pigments for Integrally Colored Concrete; 2016.

I. BIA Technical Notes No. 7 - Water Penetration Resistance – Design and Detailing; 2017.

J. BIA Technical Notes No. 28B - Brick Veneer/Steel Stud Walls; 2005.

K. BIA Technical Notes No. 46 - Maintenance of Brick Masonry; 2017.

L. TMS 402/602 - Building Code Requirements and Specification for Masonry Structures; 2022, with Errata.

1.04 ADMINISTRATIVE REQUIREMENTS

A. Preinstallation Meeting: Convene one week before starting work of this section.

1.05 SUBMITTALS

A. See Section 01 3000 - Administrative Requirements, for submittal procedures.

B. Product Data: Provide data for masonry units, fabricated wire reinforcement, mortar, and thru wall flashings.

C. Samples: Submit two samples of decorative block units to illustrate color, texture, and extremes of color range.

D. Manufacturer's Certificate: Certify that masonry units meet or exceed specified requirements.

1.06 QUALITY ASSURANCE

A. Comply with provisions of TMS 402/602, except where exceeded by requirements of Contract Documents.
   1. Maintain one copy of each document on project site.

B. Manufacturer Qualifications: Company specializing in manufacturing the type of products specified in this section with minimum five years of experience.

C. Installer Qualifications: Company specializing in performing work of the type specified and with at least five years of experience and approved by manufacturer.

1.07 DELIVERY, STORAGE, AND HANDLING

A. Deliver, handle, and masonry units by means that will prevent mechanical damage and contamination by other materials.

1.08 FIELD CONDITIONS

A. Cold and Hot Weather Requirements: Comply with requirements of TMS 402/602 or applicable building code, whichever is more stringent.

PART 2 PRODUCTS

2.01 BRICK UNITS

A. Manufacturers:
   1. Mutual Materials; www.mutualmaterials.com
   2. Willamette Graystone; www.willamettegraystone.com
   3. Substitutions: See Section 01 6000 - Product Requirements.

B. Facing Brick: ASTM C216, Type FBS Smooth, Grade SW.
   1. Color and Texture: Match color and texture of existing brick.
   2. Nominal Size: Match size and shape of existing brick.
   3. Special Shapes: Molded units as required by conditions indicated, unless standard units can be sawn to produce equivalent effect.
   4. Compressive Strength: As indicated on drawings, measured in accordance with ASTM C67/C67M.

2.02 MORTAR MATERIALS

A. Portland Cement: ASTM C150/C150M, Type I; color as required to produce approved color sample.

B. Pigments for Colored Mortar: Pure, concentrated mineral pigments specifically intended for mixing into mortar and complying with ASTM C979/C979M.
   1. Color(s): Match color of existing mortar.

C. Water: Clean and potable.

2.03 REINFORCEMENT AND ANCHORAGE

A. Reinforcing Steel: ASTM A615/A615M, Grade 40 (40,000 psi) yield strength, deformed billet bars; galvanized.

B. Joint Reinforcement Standard: ASTM A951/A951M.
   1. Type: Truss or ladder.
   2. Material: Stainless steel complying with ASTM A580/A580M Type 304.
   3. Size: 0.1483 inch side rods with 0.1483 inch cross rods; width as required to provide not less than 5/8 inch of mortar coverage on each exposure.

C. Masonry Veneer Anchors: 2-piece anchors that permit differential movement between masonry veneer and structural backup, Stainless steel complying with ASTM A580/A580M Type 304.
   1. Anchor plates: Not less than 0.075 inch thick, designed for fastening to structural backup through sheathing by two fasteners; provide design with legs that penetrate sheathing and insulation to provide positive anchorage.

2. Wire ties: Manufacturer's standard shape, 0.1875 inch thick.
3. Vertical adjustment: Not less than 3-1/2 inches.
4. Manufacturers:
   a. Hohmann & Barnard, Inc; 2-seal Thermal Wing Nut Anchor: www.h-b.com/#sle.
   b. Substitutions: See Section 01 6000 - Product Requirements.

2.04 FLASHINGS

A. Metal Flashing Materials: Stainless Steel, as specified in Section 07 6200.

2.05 ACCESSORIES

A. Weeps:
   1. Type: Polyester mesh.
   2. Color(s): As selected by Architect from manufacturer's full range.
   3. Manufacturers:
      a. Mortar Net Solutions; WeepVent: www.mortarnet.com/#sle.
      b. Substitutions: See Section 01 6000 - Product Requirements.

B. Cavity Mortar Control: Semi-rigid polyethylene or polyester mesh panels, sized to thickness of wall cavity, and designed to prevent mortar droppings from clogging weeps and cavity vents and allow proper cavity drainage.
   1. Mortar Diverter: Panels installed at flashing locations.
      a. Manufacturers:
         1) Mortar Net Solutions; MortarNet: www.mortarnet.com/#sle.
         2) Substitutions: See Section 01 6000 - Product Requirements.

C. Cleaning Solution: Non-acidic, not harmful to masonry work or adjacent materials.

2.06 MORTAR MIXING

A. Mortar for Unit Masonry: ASTM C270, Proportion Specification.

B. Colored Mortar: Proportion selected pigments and other ingredients to match Architect's sample, without exceeding manufacturer's recommended pigment-to-cement ratio.

PART 3 EXECUTION

3.01 EXAMINATION

A. Verify that field conditions are acceptable and are ready to receive masonry.

B. Verify that related items provided under other sections are properly sized and located.

C. Verify that built-in items are in proper location, and ready for roughing into masonry work.

3.02 COURSING

A. Establish lines, levels, and coursing indicated. Protect from displacement.

B. Maintain masonry courses to uniform dimension. Form vertical and horizontal joints of uniform thickness.

C. Brick Units: Match existing bond and coursing.
   1. Mortar Joints: Match existing..

3.03 PLACING AND BONDING

A. Lay solid masonry units in full bed of mortar, with full head joints, uniformly jointed with other work.

B. Buttering corners of joints or excessive furrowing of mortar joints is not permitted.

C. Remove excess mortar as work progresses.

D. Interlock intersections and external corners, except where indicated at fire walls..

E. Do not shift or tap masonry units after mortar has achieved initial set. Where adjustment must be made, remove mortar and replace.

F. Perform job site cutting of masonry units with proper tools to provide straight, clean, unchipped edges. Prevent broken masonry unit corners or edges.
   1. Do not expose cut unit ends.

G. Isolate top joint of masonry veneer from horizontal structural framing members or support angles with compressible joint filler.

3.04 WEEPS/CAVITY VENTS

A. Install weeps in veneer walls at 16 inches on center horizontally on top of through-wall flashing above shelf angles and lintels and at bottom of walls.

3.05 CAVITY MORTAR CONTROL

A. Do not permit mortar to drop or accumulate into cavity air space or to plug weep/cavity vents.

B. Install cavity mortar diverter at base of cavity and at other flashing locations as recommended by manufacturer to prevent mortar droppings from blocking weep/cavity vents.

3.06 REINFORCEMENT AND ANCHORAGE - MASONRY VENEER

A. Install horizontal joint reinforcement 16 inches on center.

B. Place masonry joint reinforcement in first and second horizontal joints above and below openings. Extend minimum 16 inches each side of opening.

C. Lap joint reinforcement ends minimum 6 inches.

D. Stud Back-Up: Secure veneer anchors to stud framed back-up and embed into masonry veneer at maximum 16 inches on center vertically and 24 inches on center horizontally. Place additional anchors at perimeter of openings and ends of panels, so maximum spacing of anchors is 8 inches on center.

E. Seismic Reinforcement: Connect veneer anchors with continuous horizontal wire reinforcement before embedding anchors in mortar.

3.07 MASONRY FLASHINGS

A. Whether or not specifically indicated, install masonry flashing to divert water to exterior at all locations where downward flow of water will be interrupted.
   1. Extend flashings full width at such interruptions and at least 6 inches, minimum, into adjacent masonry or turn up at least 1 inch, minimum, to form watertight pan at non-masonry construction.
   2. Remove or cover protrusions or sharp edges that could puncture flashings.

B. At building base course extend polymer coated stainless steel flashing and adhere over stainless steel drip flashing to extend through face of masonry.
   1. At all other locations, extend polymer coated stainless steel flashing to within 1/4 inch of exterior face of masonry.

C. Lap end joints of flashings at least 6 inches, minimum, and seal watertight with flashing sealant/adhesive.

3.08 CONTROL AND EXPANSION JOINTS

A. Do not continue horizontal joint reinforcement through control or expansion joints.

B. Form control joint with a sheet building paper bond breaker fitted to one side of the hollow contour end of the block unit. Fill the resultant core with grout fill. Rake joint at exposed unit faces for placement of backer rod and sealant.

C. Size control joints as indicated on drawings; if not indicated, 3/4 inch wide and deep.

D. Form expansion joint as detailed on drawings.

3.09 TOLERANCES

A. Install masonry within the site tolerances found in TMS 402/602.

B. Maximum Variation From Unit to Adjacent Unit: 1/16 inch.

C. Maximum Variation from Plane of Wall: 1/4 inch in 10 ft and 1/2 inch in 20 ft or more.

D. Maximum Variation from Level Coursing: 1/8 inch in 3 ft and 1/4 inch in 10 ft; 1/2 inch in 30 ft.

3.10 CUTTING AND FITTING

A. Cut and fit for pipes and conduit. Coordinate with other sections of work to provide correct size, shape, and location.

B. Obtain approval prior to cutting or fitting masonry work not indicated or where appearance or strength of masonry work may be impaired.

3.11 CLEANING

A. Remove excess mortar and mortar smears as work progresses.

B. Replace defective mortar. Match adjacent work.

C. Clean soiled surfaces with cleaning solution.

D. Use non-metallic tools in cleaning operations.

3.12 PROTECTION

A. Without damaging completed work, provide protective boards at exposed external corners that are subject to damage by construction activities.

END OF SECTION

This page intentionally left blank

SECTION 05 1200
STRUCTURAL STEEL FRAMING

PART 1 GENERAL

1.01 SECTION INCLUDES

A. Structural steel framing members .

B. Base plates, shear stud connectors and expansion joint plates.

C. Grouting under base plates.

1.02 REFERENCE STANDARDS

A. AISC (MAN) - Steel Construction Manual; 2023.

B. AISC 303 - Code of Standard Practice for Steel Buildings and Bridges; 2022.

C. ASTM A36/A36M - Standard Specification for Carbon Structural Steel; 2019.

D. ASTM A53/A53M - Standard Specification for Pipe, Steel, Black and Hot-Dipped, Zinc-Coated, Welded and Seamless; 2022.

E. ASTM A153/A153M - Standard Specification for Zinc Coating (Hot-Dip) on Iron and Steel Hardware; 2023.

F. ASTM A242/A242M - Standard Specification for High-Strength Low-Alloy Structural Steel; 2013 (Reapproved 2018).

G. ASTM A307 - Standard Specification for Carbon Steel Bolts, Studs, and Threaded Rod 60 000 PSI Tensile Strength; 2021.

H. ASTM A500/A500M - Standard Specification for Cold-Formed Welded and Seamless Carbon Steel Structural Tubing in Rounds and Shapes; 2021a.

I. ASTM A514/A514M - Standard Specification for High-Yield-Strength, Quenched and Tempered Alloy Steel Plate, Suitable for Welding; 2022.

J. ASTM A563/A563M - Standard Specification for Carbon and Alloy Steel Nuts (Inch and Metric); 2021a.

K. ASTM A992/A992M - Standard Specification for Structural Steel Shapes; 2022.

L. ASTM E164 - Standard Practice for Contact Ultrasonic Testing of Weldments; 2019.

M. ASTM F3125/F3125M - Standard Specification for High Strength Structural Bolts and Assemblies, Steel and Alloy Steel, Heat Treated, Inch Dimensions 120 ksi and 150 ksi Minimum Tensile Strength, and Metric Dimensions 830 MPa and 1040 MPa Minimum Tensile Strength; 2022.

N. ASTM F436/F436M - Standard Specification for Hardened Steel Washers Inch and Metric Dimensions; 2019.

O. ASTM F3125/F3125M - Standard Specification for High Strength Structural Bolts and Assemblies, Steel and Alloy Steel, Heat Treated, Inch Dimensions 120 ksi and 150 ksi Minimum Tensile Strength, and Metric Dimensions 830 MPa and 1040 MPa Minimum Tensile Strength; 2022.

P. AWS A2.4 - Standard Symbols for Welding, Brazing, and Nondestructive Examination; 2020.

Q. AWS D1.1/D1.1M - Structural Welding Code - Steel; 2020, with Errata (2023).

R. RCSC (HSBOLT) - Specification for Structural Joints Using High-Strength Bolts; Research Council on Structural Connections; 2020.

1.03 SUBMITTALS

A. See Section 01 3000 - Administrative Requirements, for submittal procedures.

B. Shop Drawings:

1. Indicate profiles, sizes, spacing, locations of structural members, openings, attachments, and fasteners.
2. Connections.
3. Indicate welded connections with AWS A2.4 welding symbols. Indicate net weld lengths.

C. Manufacturer's Mill Certificate: Certify that products meet or exceed specified requirements.

D. Welders Certificates: Certify welders employed on the Work, verifying AWS qualification within the previous 12 months.

1.04 QUALITY ASSURANCE

A. Fabricate structural steel members in accordance with AISC (MAN) "Steel Construction Manual."

B. Fabricator: Company specializing in performing the work of this section with minimum 5 years of documented experience.

C. Erector: Company specializing in performing the work of this section with minimum 5 years of documented experience.

PART 2 PRODUCTS

2.01 MATERIALS

A. Steel Angles and Plates: ASTM A36/A36M.

B. Steel W Shapes and Tees: ASTM A992/A992M.

C. Rolled Steel Structural Shapes: ASTM A992/A992M.

D. Steel Shapes, Plates, and Bars: ASTM A242/A242M high-strength, corrosion-resistant structural steel.

E. Cold-Formed Structural Tubing: ASTM A500/A500M, Grade B.

F. Steel Plate: ASTM A514/A514M.

G. Pipe: ASTM A53/A53M, Grade B, Finish black.

H. Structural Bolts and Nuts: Carbon steel, ASTM A307, Grade Aand galvanized in compliance with ASTM A153/A153M Class C.

I. High-Strength Structural Bolts, Nuts, and Washers: ASTM F3125/F3125M, Type 1, with matching compatible ASTM A563/A563M nuts and ASTM F436/F436M washers.

J. Headed Anchor Rods: ASTM F1554 Grade 36, plain.

K. Welding Materials: AWS D1.1/D1.1M; type required for materials being welded.

L. Grout: ASTM C1107/C1107M; Non-shrink; premixed compound consisting of non-metallic aggregate, cement, water reducing and plasticizing agents.
1. Minimum Compressive Strength at 48 Hours: 2,000 pounds per square inch.
2. Minimum Compressive Strength at 28 Days: 7,000 pounds per square inch.

M. Shop and Touch-Up Primer: Fabricator's standard, complying with VOC limitations of authorities having jurisdiction.

N. Touch-Up Primer for Galvanized Surfaces: Fabricator's standard, complying with VOC limitations of authorities having jurisdiction.

2.02 FABRICATION

A. Shop fabricate to greatest extent possible.

B. Continuously seal joined members by continuous welds. Grind exposed welds smooth.

C. Fabricate connections for bolt, nut, and washer connectors.

2.03 FINISH

A. Prepare structural component surfaces in accordance with SSPC-SP 3.

B. Shop prime structural steel members. Do not prime surfaces that will be fireproofed, field welded, in contact with concrete, or high strength bolted.

2.04 SOURCE QUALITY CONTROL

A. Welded Connections: in accordance with special inspections indicated on drawings.

PART 3 EXECUTION

3.01 EXAMINATION

A. Verify that conditions are appropriate for erection of structural steel and that the work may properly proceed.

3.02 ERECTION

A. Erect structural steel in compliance with AISC 303.

B. Allow for erection loads and provide sufficient temporary bracing to maintain structure in safe condition, plumb, and in true alignment until completion of erection and installation of permanent bracing.

C. Use carbon steel bolts only for temporary bracing during construction, unless otherwise specifically permitted on drawings. Install high-strength bolts in accordance with RCSC (HSBOLT) "Specification for Structural Joints Using High-Strength Bolts".

D. Do not field cut or alter structural members without approval of Architect.

E. After erection, prime welds, abrasions, and surfaces not shop primed, except surfaces to be in contact with concrete.

F. Grout solidly between column plates and bearing surfaces, complying with manufacturer's instructions for nonshrink grout. Trowel grouted surfaces smooth, splaying neatly to 45 degrees.

3.03 TOLERANCES

A. Maximum Variation From Plumb: 1/4 inch per story, non-cumulative.

B. Maximum Offset From True Alignment: 1/4 inch.

END OF SECTION

This page intentionally left blank

SECTION 05 5000
METAL FABRICATIONS

PART 1 GENERAL

1.01 SECTION INCLUDES

A. Shop fabricated steel items.

1.02 RELATED REQUIREMENTS

A. Section 03 3000 - Cast-in-Place Concrete: Placement of metal fabrications in concrete.

B. Section 09 9123 - Interior Painting: Paint finish.

1.03 REFERENCE STANDARDS

A. ASTM A36/A36M - Standard Specification for Carbon Structural Steel; 2019.

B. ASTM A53/A53M - Standard Specification for Pipe, Steel, Black and Hot-Dipped, Zinc-Coated, Welded and Seamless; 2022.

C. ASTM A123/A123M - Standard Specification for Zinc (Hot-Dip Galvanized) Coatings on Iron and Steel Products; 2017.

D. ASTM A283/A283M - Standard Specification for Low and Intermediate Tensile Strength Carbon Steel Plates; 2018.

E. ASTM A500/A500M - Standard Specification for Cold-Formed Welded and Seamless Carbon Steel Structural Tubing in Rounds and Shapes; 2021a.

F. ASTM F3125/F3125M - Standard Specification for High Strength Structural Bolts and Assemblies, Steel and Alloy Steel, Heat Treated, Inch Dimensions 120 ksi and 150 ksi Minimum Tensile Strength, and Metric Dimensions 830 MPa and 1040 MPa Minimum Tensile Strength; 2022.

G. AWS D1.1/D1.1M - Structural Welding Code - Steel; 2020, with Errata (2023).

H. AWS D1.2/D1.2M - Structural Welding Code - Aluminum; 2014, with Errata (2020).

I. IAS AC172 - Accreditation Criteria for Fabricator Inspection Programs for Structural Steel AC172; 2019.

J. SSPC-Paint 15 - Steel Joist Shop Primer/Metal Building Primer; 2004.

K. SSPC-Paint 20 - Zinc-Rich Coating (Type I - Inorganic, and Type II - Organic); 2019.

L. SSPC-SP 2 - Hand Tool Cleaning; 2018.

1.04 SUBMITTALS

A. See Section 01 3000 - Administrative Requirements, for submittal procedures.

B. Shop Drawings: Indicate profiles, sizes, connection attachments, reinforcing, anchorage, size and type of fasteners, and accessories. Include erection drawings, elevations, and details where applicable.

C. Welders' Certificates: Submit certification for welders employed on the project, verifying AWS qualification within the previous 12 months.

1.05 QUALITY ASSURANCE

A. Design ____ under direct supervision of a Professional Structural Engineer experienced in design of this work and licensed in Oregon.

B. Welder Qualifications: Welding processes and welding operators qualified in accordance with AWS D1.1/D1.1M and AWS D1.2/D1.2M and dated no more than 12 months before start of scheduled welding work.

C. Fabricator Qualifications: A qualified steel fabricator that is accredited by IAS AC172.

PART 2 PRODUCTS

2.01 MATERIALS - STEEL

A. Steel Sections: ASTM A36/A36M.

B. Steel Tubing: ASTM A500/A500M Grade B cold-formed structural tubing.

C. Plates: ASTM A283/A283M.

D. Pipe: ASTM A53/A53M, Grade B Schedule 40, black finish.

E. Bolts, Nuts, and Washers: ASTM F3125/F3125M, Type 1, plain.

F. Welding Materials: AWS D1.1/D1.1M; type required for materials being welded.

G. Shop and Touch-Up Primer: SSPC-Paint 15, complying with VOC limitations of authorities having jurisdiction.

H. Touch-Up Primer for Galvanized Surfaces: SSPC-Paint 20, Type I - Inorganic, complying with VOC limitations of authorities having jurisdiction.

2.02 FABRICATION

A. Fit and shop assemble items in largest practical sections, for delivery to site.

B. Fabricate items with joints tightly fitted and secured.

C. Continuously seal joined members by intermittent welds and plastic filler.

D. Grind exposed joints flush and smooth with adjacent finish surface. Make exposed joints butt tight, flush, and hairline. Ease exposed edges to small uniform radius.

E. Exposed Mechanical Fastenings: Flush countersunk screws or bolts; unobtrusively located; consistent with design of component, except where specifically noted otherwise.

F. Furnish components required for anchorage of fabrications. Fabricate anchors and related components of same material and finish as fabrication, except where specifically noted otherwise.

2.03 FABRICATED ITEMS

2.04 FINISHES - STEEL

A. Prime paint steel items.

B. Prepare surfaces to be primed in accordance with SSPC-SP2.

C. Clean surfaces of rust, scale, grease, and foreign matter prior to finishing.

D. Prime Painting: One coat.

E. Galvanizing of Structural Steel Members: Galvanize exterior items after fabrication to ASTM A123/A123M requirements. Provide minimum 1.7 oz/sq ft galvanized coating.

F. Galvanizing of Non-structural Items: Galvanize exterior items after fabrication to ASTM A123/A123M requirements.

2.05 FABRICATION TOLERANCES

A. Squareness: 1/8 inch maximum difference in diagonal measurements.

B. Maximum Offset Between Faces: 1/16 inch.

C. Maximum Misalignment of Adjacent Members: 1/16 inch.

D. Maximum Bow: 1/8 inch in 48 inches.

E. Maximum Deviation From Plane: 1/16 inch in 48 inches.

PART 3 EXECUTION

3.01 EXAMINATION

A. Verify that field conditions are acceptable and are ready to receive work.

3.02 PREPARATION

A. Clean and strip primed steel items to bare metal where site welding is required.

B. Furnish setting templates to the appropriate entities for steel items required to be cast into concrete or embedded in masonry.

3.03 INSTALLATION

A. Install items plumb and level, accurately fitted, free from distortion or defects.

B. Provide for erection loads, and for sufficient temporary bracing to maintain true alignment until completion of erection and installation of permanent attachments.

C. Field weld components as indicated on drawings.

D. Perform field welding in accordance with AWS D1.1/D1.1M.

E. Obtain approval prior to site cutting or making adjustments not scheduled.

F. After erection, prime welds, abrasionsand surfaces not shop primed or galvanized , except surfaces to be in contact with concrete.

3.04 TOLERANCES

A. Maximum Variation From Plumb: 1/4 inch per story, non-cumulative.

B. Maximum Offset From True Alignment: 1/4 inch.

C. Maximum Out-of-Position: 1/4 inch.

END OF SECTION

This page intentionally left blank

SECTION 06 1000
ROUGH CARPENTRY

PART 1 GENERAL

1.01 SECTION INCLUDES

A. Structural dimension lumber framing.

B. Nonstructural dimension lumber framing.

C. Rough opening framing for doors, windows, and roof openings.

D. Sheathing.

E. Underlayment.

F. Roof-mounted curbs.

G. Roofing nailers.

H. Roofing cant strips.

I. Preservative treated wood materials.

J. Fire retardant treated wood materials.

K. Miscellaneous framing and sheathing.

L. Communications and electrical room mounting boards.

M. Concealed wood blocking, nailers, and supports.

N. Miscellaneous wood nailers, furring, and grounds.

1.02 RELATED REQUIREMENTS

A. Section 01 6116 - Volatile Organic Compound (VOC) Content Restrictions.

B. Section 03 3000 - Cast-in-Place Concrete: Setting anchors in concrete.

C. Section 05 1200 - Structural Steel Framing: Prefabricated beams and columns for support of wood framing.

D. Section 05 5000 - Metal Fabrications: Miscellaneous steel connectors and support angles for wood framing.

E. Section 06 2000 - Finish Carpentry

F. Section 07 2500 - Weather Barriers: Water-resistive barrier over sheathing.

G. Section 07 6200 - Sheet Metal Flashing and Trim: Sill flashings.

H. Section 09 2116 - Gypsum Board Assemblies: Gypsum-based sheathing.

1.03 REFERENCE STANDARDS

A. ANSI A208.1 - American National Standard for Particleboard; 2022.

B. ASTM A153/A153M - Standard Specification for Zinc Coating (Hot-Dip) on Iron and Steel Hardware; 2023.

C. ASTM A653/A653M - Standard Specification for Steel Sheet, Zinc-Coated (Galvanized) or Zinc-Iron Alloy-Coated (Galvannealed) by the Hot-Dip Process; 2023.

D. ASTM C208 - Standard Specification for Cellulosic Fiber Insulating Board; 2022.

E. ASTM C578 - Standard Specification for Rigid, Cellular Polystyrene Thermal Insulation; 2022.

F. ASTM C1177/C1177M - Standard Specification for Glass Mat Gypsum Substrate for Use as Sheathing; 2017.

G. ASTM C1289 - Standard Specification for Faced Rigid Cellular Polyisocyanurate Thermal Insulation Board; 2023.

H. ASTM C1396/C1396M - Standard Specification for Gypsum Board; 2017.

I. ASTM D2898 - Standard Practice for Accelerated Weathering of Fire-Retardant-Treated Wood for Fire Testing; 2010 (Reapproved 2017).

J. ASTM D3273 - Standard Test Method for Resistance to Growth of Mold on the Surface of Interior Coatings in an Environmental Chamber; 2021.

K. ASTM E84 - Standard Test Method for Surface Burning Characteristics of Building Materials; 2023b.

L. AWC (WFCM) - Wood Frame Construction Manual for One- and Two-Family Dwellings; 2018, with Errata (2019).

M. AWPA U1 - Use Category System: User Specification for Treated Wood; 2023.

N. CARB (ATCM) - Airborne Toxic Control Measure to Reduce Formaldehyde Emissions from Composite Wood Products; California Air Resources Board; current edition.

O. PS 1 - Structural Plywood; 2019.

P. PS 2 - Performance Standard for Wood Structural Panels; 2018.

Q. PS 20 - American Softwood Lumber Standard; 2021.

R. WWPA G-5 - Western Lumber Grading Rules; 2021.

1.04 SUBMITTALS

A. See Section 01 3000 - Administrative Requirements for submittal procedures.

B. Product Data: Provide technical data on wood preservative materials and data on compliance with urea formaldehyde requirements.

C. Structural Composite Lumber: Submit manufacturer's published structural data including span tables, marked to indicate which sizes and grades are being used; if structural composite lumber is being substituted for dimension lumber or timbers, submit grading agency structural tables marked for comparison.

D. Manufacturer's Certificate: Certify that wood products supplied for rough carpentry meet or exceed specified requirements.

1.05 DELIVERY, STORAGE, AND HANDLING

A. General: Wrap, cover and protect wood products in shipment and while stored on the site to prevent weather exposure and damage. Support stacked products to prevent deformation and to allow air circulation. Maintain stacks neat and in good order; level and off ground or floors; raised on pallets or dunnage to prevent contact with water or earth.

1.06 WARRANTY

A. See Section 01 7800 - Closeout Submittals for additional warranty requirements.

B. Correct defective work within a two-year period commencing on Date of Substantial Completion.

PART 2 PRODUCTS

2.01 GENERAL REQUIREMENTS

A. Dimension Lumber: Comply with PS 20 and requirements of specified grading agencies.
   1. Species: Douglas Fir-Larch, unless otherwise indicated.
   2. If no species is specified, provide species graded by the agency specified; if no grading agency is specified, provide lumber graded by grading agency meeting the specified requirements.
   3. Grading Agency: Grading agency whose rules are approved by the Board of Review, American Lumber Standard Committee at www.alsc.org, and who provides grading service for the species and grade specified; provide lumber stamped with grade mark unless otherwise indicated.
   4. Lumber of other species or grades is acceptable provided structural and appearance characteristics are equivalent to or better than products specified.

B. Construction panels:
   1. Provide only material with no added urea formaldehyde, meeting CARB-2 requirements or having a 'No added urea formaldehyde' (NAUF) exemption from CARB.

2.02 DIMENSION LUMBER FOR CONCEALED APPLICATIONS

A. Grading Agency: Western Wood Products Association; WWPA G-5.

B. Sizes and Grades: as indicated on drawings, S4S.

C. Moisture Content: S-dry or MC19.

D. Stud Framing (2 by 2 through 2 by 6):
   1. Species: Douglas Fir-Larch.
   2. Grade: No. 2.

E. Miscellaneous Framing, Blocking, Nailers, Grounds, and Furring:
   1. Lumber: S4S, No. 2 or Standard Grade.
   2. Boards: Standard or No. 3.

2.03 STRUCTURAL COMPOSITE LUMBER

A. Structural Composite Lumber: Factory fabricated beams, headers, and columns, of sizes and types indicated on drawings; structural capacity as published by manufacturer.

2.04 CONSTRUCTION PANELS

A. Subfloor/Underlayment Combination: PS 1 or PS 2 type, rated Single Floor.
   1. Bond Classification: Exposure 1.

B. Roof Sheathing: PS 2 type, rated Structural I Sheathing.
   1. Bond Classification: Exterior.
   2. Span Rating: Per construction documents.
   3. Performance Category: 3/4 PERF CAT.
   4. See Structural drawings for additional requirements.

C. Wall Sheathing: PS 2 type.
   1. Bond Classification: Exterior.
   2. Grade: Per construction drawings..
   3. Span Rating: Per construction drawings.
   4. Performance Category: _____ PERF CAT per construction drawings.
   5. Edge Profile: Square edge.
   6. See structural drawings for additional requirements.

D. Communications and Electrical Room Mounting Boards: PS 1 A-D plywood, or medium density fiberboard; 3/4 inch thick; flame spread index of 25 or less, smoke developed index of 450 or less, when tested in accordance with ASTM E84.

2.05 ACCESSORIES

A. Fasteners and Anchors:
   1. Metal and Finish: Hot-dipped galvanized steel complying with ASTM A153/A153M for high humidity and preservative-treated wood locations, unfinished steel elsewhere.
   2. Nail Fasteners: Common nails conforming to FS FF-N-105, see drawings.
   3. Steel Framing Connectors: Install with nails or bolts of sizes and type specified by manufacturer of connector.

B. Die-Stamped Connectors: Hot dipped galvanized steel, sized to suit framing conditions.
   1. For contact with preservative treated wood in exposed locations, provide minimum G185 galvanizing complying with ASTM A653/A653M.

C. Joist Hangers: Hot dipped galvanized steel, sized to suit framing conditions.

D. Sill Gasket: 1/4 inch thick, plate width, closed cell plastic foam from continuous rolls.
   1. Width: 3-1/2 inches.

2. Ultraviolet (UV) and Weathering Resistance: Approved in writing by manufacturer for up to 30 days of weather exposure.
3. Products:
   a. Protecto Wrap Company; Triple Guard Energy Sill Sealer: www.protectowrap.com/#sle.
   b. Substitutions: See Section 01 6000 - Product Requirements.

E. Construction Adhesives: Comply with VOC requirement of 70 g/L max in SCAQMD Rule 1168.

F. Water-Resistive Barrier: See Section 07 2500.

2.06 FACTORY WOOD TREATMENT

A. Treated Lumber and Plywood: Comply with requirements of AWPA U1 - Use Category System for wood treatments determined by use categories, expected service conditions, and specific applications.
   1. Preservative-Treated Wood: Provide lumber and plywood marked or stamped by an ALSC-accredited testing agency, certifying level and type of treatment in accordance with AWPA standards.

B. Preservative Pressure Treatment of Lumber Above Grade: AWPA U1, Use Category UC3B, Commodity Specification A using waterborne preservative.
   1. Kiln dry lumber after treatment to maximum moisture content of 19 percent.
   2. Treat lumber exposed to weather.
   3. Treat lumber in contact with roofing, flashing, or waterproofing.
   4. Treat lumber in contact with masonry or concrete.

PART 3 EXECUTION

3.01 PREPARATION

A. Where wood framing bears on cementitious foundations, install full width sill flashing continuous over top of foundation, lap ends of flashing minimum of 4 inches and seal.

B. Install sill gasket under sill plate of framed walls bearing on foundations; puncture gasket cleanly to fit tightly around protruding anchor bolts.

C. Coordinate installation of rough carpentry members specified in other sections.

3.02 INSTALLATION - GENERAL

A. Select material sizes to minimize waste.

B. Reuse scrap to the greatest extent possible; clearly separate scrap for use on site as accessory components, including: shims, bracing, and blocking.

C. Where treated wood is used on interior, provide temporary ventilation during and immediately after installation sufficient to remove indoor air contaminants.

3.03 FRAMING INSTALLATION

A. Set structural members level, plumb, and true to line. Discard pieces with defects that would lower required strength or result in unacceptable appearance of exposed members.

B. Make provisions for temporary construction loads, and provide temporary bracing sufficient to maintain structure in true alignment and safe condition until completion of erection and installation of permanent bracing.

C. Install structural members full length without splices unless otherwise specifically detailed.

D. Comply with member sizes, spacing, and configurations indicated, and fastener size and spacing indicated, but not less than required by applicable codes and AWC (WFCM) Wood Frame Construction Manual.

E. Construct double joist headers at floor and ceiling openings and under wall stud partitions that are parallel to floor joists; use metal joist hangers unless otherwise detailed.

F. Frame wall openings with two or more studs at each jamb; support headers on cripple studs.

G. Set sill sealer or gasket under all sole plates.

H. Bolting: Provide standard plate washers under heads and nuts of bolts bearing on wood. Soap threads of lag bolts prior to installing.

I. Install pressure treated framing at locations where wood framing is in contact with concrete.

3.04 BLOCKING, NAILERS, AND SUPPORTS

A. Provide framing and blocking members as indicated or as required to support finishes, fixtures, specialty items, and trim.

B. In walls, provide blocking attached to studs as backing and support for wall-mounted items, unless item can be securely fastened to two or more studs or other method of support is explicitly indicated.

C. Where ceiling-mounting is indicated, provide blocking and supplementary supports above ceiling, unless other method of support is explicitly indicated.

D. Provide the following specific nonstructural framing and blocking:
   1. Cabinets and shelf supports.
   2. Wall brackets.
   3. Handrails.
   4. Grab bars.
   5. Towel and bath accessories.
   6. Wall-mounted door stops.
   7. Chalkboards and marker boards.
   8. Wall paneling and trim.
   9. Joints of rigid wall coverings that occur between studs.

3.05 ROOF-RELATED CARPENTRY

A. Coordinate installation of roofing carpentry with deck construction, framing of roof openings, and roofing assembly installation.

B. Provide wood curb at each roof opening except where specifically indicated otherwise; form corners by alternating lapping side members.

3.06 INSTALLATION OF CONSTRUCTION PANELS

A. Roof Sheathing: Secure panels with long dimension perpendicular to framing members, with ends staggered and over firm bearing.
   1. Nail panels to framing; staples are not permitted.

B. Wall Sheathing: Secure with long dimension perpendicular to wall studs, with ends over firm bearing and staggered, using nails, screws, or staples.
   1. Place water-resistive barrier horizontally over wall sheathing, weather lapping edges and ends.

C. Communications and Electrical Room Mounting Boards: Secure with screws to studs with edges over firm bearing; space fasteners at maximum 24 inches on center on all edges and into studs in field of board.
   1. At fire-rated walls, install board over wall board indicated as part of the fire-rated assembly.
   2. Where boards are indicated as full floor-to-ceiling height, install with long edge of board parallel to studs.
   3. Install adjacent boards without gaps.

3.07 TOLERANCES

A. Framing Members: 1/4 inch from true position, maximum.

B. Surface Flatness of Floor: 1/8 inch in 10 feet maximum, and 1/4 inch in 30 feet maximum.

C. Variation from Plane, Other than Floors: 1/4 inch in 10 feet maximum, and 1/4 inch in 30 feet maximum.

This page intentionally left blank

SECTION 06 1800
GLUED-LAMINATED CONSTRUCTION

PART 1 GENERAL

1.01 SECTION INCLUDES

A. Glue laminated wood beams and purlins.

B. Steel hardware and attachment brackets.

C. Timber connectors

D. Factory Finish

1.02 RELATED REQUIREMENTS

A. Section 01 6116 - Volatile Organic Compound (VOC) Content Restrictions.

B. Section 09 9113 - Exterior Painting: Field finishing.

1.03 REFERENCE STANDARDS

A. AITC 117 - Standard Specifications for Structural Glued Laminated Timber of Softwood Species; 2010.

B. AITC A190.1 - American National Standard for Wood Products - Structural Glued Laminated Timber; 2007.

C. ASTM A36/A36M - Standard Specification for Carbon Structural Steel; 2019.

D. ASTM A123/A123M - Standard Specification for Zinc (Hot-Dip Galvanized) Coatings on Iron and Steel Products; 2017.

1.04 SUBMITTALS

A. See Section 01 3000 - Administrative Requirements, for submittal procedures.

B. Submit design calculations signed and sealed by design engineer.

C. Manufacturer's Qualification Statement.

1.05 QUALITY ASSURANCE

A. Designer Qualifications: Design structural members under direct supervision of a Professional Structural Engineer experienced in design of this work and licensed in Oregon.

B. Manufacturer/Fabricator Qualifications: Company specializing in manufacture of glue laminated structural units with three years of documented experience, and certified by AITC in accordance with AITC A190.1 or APA-EWS-licensed firm.

1.06 DELIVERY, STORAGE, AND HANDLING

A. Protect members to AITC requirements for individually wrapped.
   1. Plastic-coated paper covering with water-resistant seams.

B. Do not remove wrappings on individually wrapped members until they no longer serve a useful purpose, including protection from weather, sunlight, soiling, and damage from work of other trades.
   1. Slit underside of wrapping to prevent accumulation of moisture inside the wrapping.

PART 2 PRODUCTS

2.01 GLUED-LAMINATED UNITS

A. Glued-Laminated Units: Fabricate in accordance with AITC 117 Industrial grade.
   1. Verify dimensions and site conditions prior to fabrication.
   2. Cut and fit members accurately to length to achieve tight joint fit.
   3. Fabricate member with camber built in.
   4. Do not splice or join members in locations other than those indicated without permission.
   5. After end trimming, seal with penetrating sealer in accordance with AITC requirements.

B. Performance Criteria:
   1. Conform to applicable code for loads, seismic zoning, and other load criteria. Comply with design criteria indicated on drawings.

2.02 MATERIALS

A. General: Provide structural glued-laminated timber that complies with ANSI A190.1 and ANSI 117 or research/evaluation reports acceptable to authorities having jurisdiction.
   1. Factory mark each piece of structural glued-laminated timber with AITC Quality Mark or APA-EWS trademark. Place mark on surfaces that are not exposed in the completed Work.
   2. Provide structural glued-laminated timber made with wet-use adhesive complying with ANSI A190.1.

B. Species and Grades for Structural Glued-Laminated Timber: Douglas fir-larch that complies with structural properties, combination symbols, beam stress classifications indicated.

C. Species and Grades for Beams.
   1. Species and Beam Stress Classification: Douglas fir-larch, 24F-1.8E.
   2. Lay-up: Either balanced or unbalanced.

D. Steel Connections and Brackets: ASTM A36/A36M weldable quality, galvanize per ASTM A123/A123M.
   1. Structural steel shapes, plates and flat bars as note on drawings.
   2. Finish steel assemblies and fasteners with rust-inhibitive primer, 2-mil dry film thickness.
   3. Hot-dip galvanize steel assemblies and fasteners after fabrication to comply with ASTM A123/A123M or ASTM A153/A153M.

E. Wood Sealer: _____.
   1. End Sealer: Manufacturer's standard, transparent, colorless wood sealer that is effective in retarding the transmission of moisture at cross-grain cuts and is compatible with indicated finish.
   2. Penetrating Sealer: Manufacturer's standard, transparent, penetrating wood sealer that is compatible with indicated finish.

2.03 FABRICATION

A. Fabricate glue laminated structural members in accordance with AITC Industrial grade.

B. Verify dimensions and site conditions prior to fabrication.

C. Fabricate member with camber built in. Fabricate horizontal and inclined members of less than 1:1 slope with either circular or parabolic camber equal to 1/500 of span.

D. Do not splice or join members in locations other than those indicated without permission.

E. Fabricate steel hardware and connections with joints neatly fitted, welded, and ground smooth.

F. After end trimming, seal with penetrating sealer in accordance with AITC requirements.
   1. Seal immediately after end cutting each memeber to final length, apply a saturation coat of end sealer to ends and other cross-cut surfaces, keeping surfaces flood coated for not less than 10 minutes.

G. Factory Finish: After fabricating, sanding, and end-coat sealing, apply a heavy saturation coat of penetrating sealer on surfaces of each unit.

H. Field Finishing of Members: Specified in Section 09 9113 and 09 9123.

PART 3 EXECUTION

3.01 EXAMINATION

A. Verify that supports are ready to receive units.

B. Verify sufficient end bearing area.

3.02 ERECTION

A. Lift members using protective straps to prevent visible damage.

B. Set structural members level and plumb, in correct positions or sloped where indicated.

C. Provide temporary bracing and anchorage to hold members in place until permanently secured.

D. Fit members together accurately without trimming, cutting, splicing, or other unauthorized modification.
   1. Where field fitting is unavoidable, comply with requirements for shop fabrication.
   2. Confirm with Structural Engineer that proposed adjustments are acceptable.

E. Repair damaged surfaces after completing erection. Replace damaged structural glue-laminated lumber if repairs are not approved by Architect.

3.03 TOLERANCES

A. Framing Members: 1/2 inch maximum from true position.

END OF SECTION

This page intentionally left blank

SECTION 06 2000
FINISH CARPENTRY

PART 1 GENERAL

1.01 SECTION INCLUDES

A. Finish carpentry items.

B. Wood door frames, glazed frames.

C. Wood casings and moldings.

D. Hardware and attachment accessories.

1.02 RELATED REQUIREMENTS

A. Section 01 6116 - Volatile Organic Compound (VOC) Content Restrictions.

B. Section 06 1000 - Rough Carpentry: Support framing, grounds, and concealed blocking.

C. Section 06 4100 - Architectural Wood Casework: Shop fabricated custom cabinet work.

D. Section 09 9113 - Exterior Painting: Painting of finish carpentry items.

E. Section 09 9123 - Interior Painting: Painting of finish carpentry items.

1.03 REFERENCE STANDARDS

A. AWI/AWMAC/WI (AWS) - Architectural Woodwork Standards, 2nd Edition; 2014, with Errata (2016).

B. AWMAC/WI (NAAWS) - North American Architectural Woodwork Standards; 2021, with Errata.

C. AWPA U1 - Use Category System: User Specification for Treated Wood; 2023.

1.04 ADMINISTRATIVE REQUIREMENTS

A. Coordinate the work with mechanical rough-in, low voltage rough-in, plumbing rough-in, electrical rough-in, and installation of associated and adjacent components.

1.05 SUBMITTALS

A. See Section 01 3000 - Administrative Requirements for submittal procedures.

B. Product Data:
   1. Provide manufacturer's product data, storage and handling instructions for factory-fabricated units.
   2. Provide data on fire retardant treatment materials and application instructions.
   3. Provide instructions for attachment hardware and finish hardware.

C. Samples: Submit two samples of wood trim 4 inch long.

D. Certificate: Submit labels and certificates required by quality assurance and quality control programs.

1.06 QUALITY ASSURANCE

A. Fabricator Qualifications: Company specializing in fabricating the products specified in this section with minimum three years of experience.
   1. Accredited participant in the specified certification program prior to the commencement of fabrication and throughout the duration of the project.

B. Quality Certification:
   1. Provide labels or certificates indicating that work complies with AWI/AWMAC/WI (AWS) or AWMAC/WI (NAAWS) requirements for grade or grades specified.
   2. Provide designated labels on shop drawings as required by certification program.
   3. Provide designated labels on installed products as required by certification program.
   4. Submit certifications upon completion of installation that verifies this work is in compliance with specified requirements.

1.07 DELIVERY, STORAGE, AND HANDLING

A. Store finish carpentry items under cover, elevated above grade, and in a dry, well-ventilated area not exposed to heat or sunlight.

B. Protect from moisture damage.

C. Handle materials and products to prevent damage to edges, ends, or surfaces.

PART 2 PRODUCTS

2.01 FINISH CARPENTRY ITEMS

A. Quality Standard: Custom Grade, in accordance with AWI/AWMAC/WI (AWS) or AWMAC/WI (NAAWS), unless noted otherwise.

B. Surface Burning Characteristics: Provide materials having fire and smoke properties as required by applicable code.

C. Exterior Woodwork Items:
1. Door Casings and Moldings: Softwood; prepare for paint finish.
2. Soffits and Fascias: Prepare for paint finish.
3. Enclosing Soffit Spaces: Match existing material and paint.

D. Interior Woodwork Items:
1. Moldings, Casings, and Miscellaneous Trim: Poplar; prepare for paint finish.
2. Door, Glazed Light, and Pocket Door Frames: White birch; prepare for paint finish.
3. Window sills and aprons: Poplar; prepare for paint finish.

2.02 LUMBER MATERIALS

A. Softwood Lumber: Western Red Cedar species, quarter sawn, maximum moisture content of 6 percent; with vertical grain, of quality suitable for paint..

B. Hardwood Lumber: Poplar species, quarter sawn, maximum moisture content of 6 percent; with vertical grain, of quality suitable for transparent finish.

2.03 FASTENINGS

A. Adhesive for Purposes Other Than Laminate Installation: Suitable for the purpose; not containing formaldehyde or other volatile organic compounds.

B. Fasteners: Of size and type to suit application; galvanized finish in concealed locations and stainless steel finish in exposed locations.

2.04 ACCESSORIES

A. Adhesive: Type recommended by fabricator to suit application.

B. Primer: Alkyd primer sealer.

C. Wood Filler: Solvent base, tinted to match surface finish color.

2.05 WOOD TREATMENT

A. Factory-Treated Lumber: Comply with requirements of AWPA U1 - Use Category System for pressure impregnated wood treatments determined by use categories, expected service conditions, and specific applications.

2.06 FABRICATION

A. Shop assemble work for delivery to site, permitting passage through building openings.

B. When necessary to cut and fit on site, provide materials with ample allowance for cutting. Provide trim for scribing and site cutting.

2.07 SHOP FINISHING

A. Sand work smooth and set exposed nails and screws.

B. Apply wood filler in exposed nail and screw indentations.

C. Back prime woodwork items to be field finished, prior to installation.

PART 3 EXECUTION

3.01 EXAMINATION

A. Verify adequacy of backing and support framing.

B. Verify mechanical, electrical, and building items affecting work of this section are placed and ready to receive this work.

3.02 INSTALLATION

A. Install custom fabrications in accordance with AWI/AWMAC/WI (AWS) or AWMAC/WI (NAAWS) requirements for grade indicated.

B. Set and secure materials and components in place, plumb and level.

C. Carefully scribe work abutting other components, with maximum gaps of 1/32 inch. Do not use additional overlay trim to conceal larger gaps.

3.03 PREPARATION FOR SITE FINISHING

A. Set exposed fasteners. Apply wood filler in exposed fastener indentations. Sand work smooth.

B. Before installation, prime paint surfaces of items or assemblies to be in contact with cementitious materials.

3.04 TOLERANCES

A. Maximum Variation from True Position: 1/16 inch.

B. Maximum Offset from True Alignment with Abutting Materials: 1/32 inch.

END OF SECTION

This page intentionally left blank

SECTION 06 4100
ARCHITECTURAL WOOD CASEWORK

PART 1 GENERAL

1.01 SECTION INCLUDES

A. Specially fabricated cabinet units.

B. Countertops.

C. Hardware.

D. Factory finishing.

E. Preparation for installing utilities.

1.02 RELATED REQUIREMENTS

A. Section 01 6116 - Volatile Organic Compound (VOC) Content Restrictions.

B. Section 06 1000 - Rough Carpentry: Support framing, grounds, and concealed blocking.

1.03 REFERENCE STANDARDS

A. ASTM D635 - Standard Test Method for Rate of Burning and/or Extent and Time of Burning of Plastics in a Horizontal Position; 2022.

B. ASTM D1037 - Standard Test Methods for Evaluating Properties of Wood-Base Fiber and Particle Panel Materials; 2012 (Reapproved 2020).

C. ASTM D1929 - Standard Test Method for Determining Ignition Temperature of Plastics; 2023.

D. ASTM D2843 - Standard Test Method for Density of Smoke from the Burning or Decomposition of Plastics; 2022.

E. ASTM E84 - Standard Test Method for Surface Burning Characteristics of Building Materials; 2023b.

F. AWI/AWMAC/WI (AWS) - Architectural Woodwork Standards, 2nd Edition; 2014, with Errata (2016).

G. AWMAC/WI (NAAWS) - North American Architectural Woodwork Standards; 2021, with Errata.

H. NEMA LD 3 - High-Pressure Decorative Laminates; 2005.

I. CARB (ATCM) - Airborne Toxic Control Measure to Reduce Formaldehyde Emissions from Composite Wood Products; California Air Resources Board; current edition.

J. National Hardwood Lumber Association (NHLA) 'American Hardwood Lumber Grades'.

1.04 ADMINISTRATIVE REQUIREMENTS

A. Preinstallation Meeting: Convene a preinstallation meeting not less than one week before starting work of this section; require attendance by all affected installers.

1.05 SUBMITTALS

A. See Section 01 3000 - Administrative Requirements for submittal procedures.

B. Shop Drawings: Indicate materials, component profiles, fastening methods, jointing details, and accessories.
   1. Scale of Drawings: 1-1/2 inch to 1 foot, minimum.
   2. Provide information as required by AWI/AWMAC/WI (AWS) or AWMAC/WI (NAAWS).
   3. Provide data on compliance with urea formaldehyde requirements.

C. Product Data: Manufacturer's data sheets on each product to be used including:
   1. Preparation instructions and recommendations.
   2. Storage and handling requirements and recommendations.

D. Verification Samples: Submit 4 by 4 inch minimum sample of each proposed finish material, representing actual product, color and patterns.

E. Maintenance Data: Manufacturer's instructions and recommendations for maintenance and repair of surfaces.

1.06 QUALITY ASSURANCE

A. Fabricator Qualifications: Company specializing in fabricating the products specified in this section with minimum three years of documented experience.

1.07 MOCK-UPS

A. Provide mock-up of typical base cabinet, wall cabinet, and countertop, including hardware, finishes, and plumbing accessories.

B. See Section 01 4000 - Quality Requirements for additional requirements.

C. Locate where directed.

D. Approved mock-up may remain as part of the Work.

1.08 DELIVERY, STORAGE, AND HANDLING

A. Protect units from damage including moisture.

1.09 FIELD CONDITIONS

A. During and after installation of custom cabinets, maintain temperature and humidity conditions in building spaces at same levels planned for occupancy.

PART 2 PRODUCTS

2.01 CABINETS

A. Quality Standard: Custom Grade, in accordance with AWI/AWMAC/WI (AWS) or AWMAC/WI (NAAWS), unless noted otherwise.

B. Plastic Laminate Faced Cabinets: Custom grade.

C. Cabinets:
   1. Finish - Exposed Exterior Surfaces: Decorative laminate.
   2. Finish - Exposed Interior Surfaces: Decorative laminate.
   3. Finish - Concealed Surfaces: as allowed by AWI grade.
   4. Door and Drawer Front Edge Profiles: Square edge with thick applied band.
   5. Casework Construction Type: Type A - Frameless.
   6. Adjustable Shelf Loading: 40 psf.
      a. Deflection: L/144.
   7. Cabinet Style: Reveal overlay.
   8. Cabinet Doors and Drawer Fronts: Flush style.
   9. Drawer Construction Technique: Lock shoulder joints.

2.02 WOOD-BASED COMPONENTS

A. Wood fabricated from old growth timber is not permitted.

B. No particle board or particle board core plywood may be used in any part of the work, and shall be specifically excluded.

C. Plywood shall be all hardwood veneer core.

D. Composite Wood Emissions Standard: CARB (ATCM) for ultra-low emitting formaldehyde (ULEF) resins.
   1. Evidence of Compliance: Acceptable types of evidence are:
      a. Current SCS "No Added Formaldehyde (NAF)" certification; www.scscertified.com.
      b. Report of laboratory testing performed in accordance with requirements.
      c. Published product data showing compliance with requirements.

2.03 LAMINATE MATERIALS

A. Manufacturers:
   1. Formica Corporation www.formica.com.

2. Panolam Industries International, Inc. Nevamar www.nevamar.com.
3. Wilsonart www.wilsonart.com.
4. Nevamar; www.nevamar.com.
5. Substitutions: See Section 01 6000 - Product Requirements.

B. High Pressure Decorative Laminate (HPDL): NEMA LD 3, types as recommended for specific applications.

C. Provide specific types as follows:
1. Horizontal Surfaces: HGS, 0.048 inch nominal thickness, manufacturer and color as indicated on drawings.
2. Vertical Surfaces: VGS, 0.028 inch nominal thickness, manufacturer and color as indicated on drawings.
3. Cabinet Liner: CLS, 0.020 inch nominal thickness, standard off white.
a. Melamine is not allowed as a finish inside any lower cabinets within 24 inches of a sink.

2.04 COUNTERTOPS

A. For all countertops: use Marine Plywood for all substrates within 24 inches of water source.

B. Plastic Laminate Countertops: Medium density fiberboard substrate covered with HPDL, conventionally fabricated and self-edge banded.

C. All countertops backed with 0.20" balancing sheet on underside of core.

2.05 ACCESSORIES

A. Adhesive: Chemical resistant waterproof adhesive as recommended by manufacturer of materials being joined. .

B. Plastic Edge Banding: Extruded PVC, flat shaped; smooth finish; self locking serrated tongue; of width to match component thickness.
1. Color: As selected by Architect from manufacturer's standard range.

C. Fasteners: Size and type to suit application.

D. Bolts, Nuts, Washers, Lags, Pins, and Screws: Of size and type to suit application; galvanized or chrome-plated finish in concealed locations and stainless steel or chrome-plated finish in exposed locations.

E. Grommets: Standard plastic or painted metal grommets for cut-outs, in color black.

2.06 HARDWARE

A. Adjustable Shelf Supports: Standard side-mounted system using recessed metal shelf standards or multiple holes for pin supports and coordinated self rests, satin chrome finish, for nominal 1 inch spacing adjustments.
1. Shelf Clips: Seismic safety pin.

B. Countertop Support Brackets: Fixed, L-shaped, face-of-stud mounting.
1. Materials: Steel; T-shape cross-section.
a. Finish: Manufacturer's standard, factory-applied, powder coat.
b. Color: Black.
c. Height: 9 inches.
d. Support Length: 9 inches.

C. Drawer and Door Pulls: "U" shaped wire pull, steel with satin finish, 4 inch centers.

D. Cabinet Locks: Keyed cylinder, two keys per lock, master keyed, steel with satin finish.

E. Cabinet Catches and Latches:

F. Drawer Slides:
1. Type: Full extension.
2. Static Load Capacity: Heavy Duty grade.
3. Mounting: Side mounted.

4. Stops: Integral type.
5. Features: Provide self closing/stay closed type.
6. Manufacturers:
   a. Accuride International, Inc; Heavy-Duty Drawer Slides: www.accuride.com/#sle.
   b. Knape & Vogt Manufacturing Company; Heavy-Duty Drawer Slides: www.knapeandvogt.com/#sle.
   c. Substitutions: See Section 01 6000 - Product Requirements.

G. Hinges: Butt Institutional 5-knuckle type,BHMA No. 159.6 Grade 1, steel with satin finish, 270 degree opening.
1. One pair for doors less than 4 feet high, and 1-1/2 pairs for doors over 4 feet. Conform to SEFA 8PL standards.
2. Manufacturers:
   a. Hafele America Co; Five-Knuckle Institutional Hinge: www.hafele.com/us/en
   b. Richelieu; Overlay Institutional Hinge: www.richelieu.com/us/en.
   c. Rockford Process Control, LLC; Five Knuckle Overlay Hinges: www.rockfordprocesshingeandhardware.com.
   d. Substitutions: See Section 01 6000 - Product Requirements.

2.07 FABRICATION

A. Assembly: Shop assemble cabinets for delivery to site in units easily handled and to permit passage through building openings.

B. Edging: Fit shelves, doors, and exposed edges with specified edging. Do not use more than one piece for any single length.

C. Fitting: When necessary to cut and fit on site, provide materials with ample allowance for cutting. Provide matching trim for scribing and site cutting.

D. Plastic Laminate: Apply plastic laminate finish in full uninterrupted sheets consistent with manufactured sizes. Fit corners and joints hairline; secure with concealed fasteners. Slightly bevel arises. Locate counter butt joints minimum 2 feet from sink cut-outs.
1. Apply laminate backing sheet to reverse side of plastic laminate finished surfaces.
2. Cap exposed plastic laminate finish edges with 2 mil PVC.

E. Fabricate countertops and splashes in the largest sections practicable,with top surface of joints flush.
1. Join lengths of tops using best method recommeneded by manufacturer.
2. Fabricate to overhangs fronts and ends of cabinets 1 inch except where top butts against cabinet or wall.
3. Prepare all cutouts accurately to size; replace tops having improperly dimensioned or unnecessary cutouts or fixtures holes.

F. Provide back/end splash where indicated on drawings.
1. Secure to countertop with concealed fasteners and with contact surfaces set in waterproof glue.
2. Height: 4 inches, unless noted otherwise.

G. Mechanically fasten back splash to countertops as recommended by laminate manufacturer at 16 inches on center.

H. Provide cutouts for plumbing fixtures. Verify locations of cutouts from on-site dimensions. Prime paint cut edges.

I. Wall Support Counter Segments: Provide skirts, aprons, brackets, and braces as indicated on drawings, finished to match.

J. Adjustable Shelves:
1. Under 30 inches long: 3/4 inch thick substrate.
2. Over 30 inches long: 1 inch thick substrate.

PART 3 EXECUTION

3.01 EXAMINATION

A. Verify adequacy of backing and support framing.

B. Verify location and sizes of utility rough-in associated with work of this section.

C. Do not being installation until substrates have been properly prepared.

D. If substrate preparation is the responsibility of another installer, notify Architect of unsatisfactory preparation before proceeding.

E.

3.02 PREPARATION

A. Clean surfaces thoroughly prior to installation.

B. Prepare surfaces using the methods recommended by the manufacturer for achieving the best result for the substrate under the project conditions.

3.03 INSTALLATION

A. Install work in accordance with AWI/AWMAC/WI (AWS) or AWMAC/WI (NAAWS) requirements for grade indicated.

B. Set and secure custom cabinets in place, assuring that they are rigid, plumb, and level.

C. Use fixture attachments in concealed locations for wall mounted components.
   1. Upper and lower cabinets shall be anchored top and bottom to each backing stud at 16 inches on center.

D. Use concealed joint fasteners to align and secure adjoining cabinet units.

E. Carefully scribe casework abutting other components, with maximum gaps of 1/32 inch. Do not use additional overlay trim for this purpose.
   1. Keep use of fillers to a minimum; color match to HDPL color.

F. Secure cabinets to floor using appropriate angles and anchorages.

G. Securely attach countertops to cabinets using concealed fasteners. Make flat surfaces level; shim where required.

H. Attach plastic laminate countertops using screws with minimum penetration into substrate board of 5/8 inch.

I. Countersink anchorage devices at exposed locations. Conceal with solid wood plugs of species to match surrounding wood; finish flush with surrounding surfaces.

J. Seal joint between back/end splashes and vertical surfaces.

3.04 ADJUSTING

A. Adjust moving or operating parts to function smoothly and correctly.

3.05 CLEANING

A. Clean casework, counters, shelves, hardware, fittings, and fixtures.

3.06 PROTECTION

A. Protect installed products until completion of project.

B. Touch-up, repair or replace damaged products before Date of Substantial Completion.

END OF SECTION

This page intentionally left blank

SECTION 07 0150.19
PREPARATION FOR RE-ROOFING

PART 1 GENERAL

1.01 SECTION INCLUDES

A. Full Removal of existing roofing system in preparation for replacement roofing system in designated areas as indicated on drawings.

B. Removal of existing flashing and counterflashings.

C. Temporary roofing protection.

1.02 RELATED REQUIREMENTS

A. Section 07 5100 - Built-Up Bituminous Roofing.

B. Section 07 6200 - Sheet Metal Flashing and Trim: Replacement of flashing and counterflashings.

1.03 QUALITY ASSURANCE

A. Materials Removal Company Qualifications: Company specializing in performing work of type specified with at least three years of documented experience.

1.04 DELIVERY, STORAGE, AND HANDLING

A. See Section 01 7419 - Construction Waste Management and Disposal for packaging waste requirements.

B. Ensure storage and staging of materials does not exceed static and dynamic load-bearing capacities of roof decking.

1.05 FIELD CONDITIONS

A. Existing Roofing System: Built-up asphalt roofing.

B. Do not remove existing roofing membrane when weather conditions threaten the integrity of building contents or intended continued occupancy.

C. Maintain continuous temporary protection prior to and during installation of new roofing system.

D. Provide notice at least three days before starting activities that will affect normal building operations.

E. Verify that occupants have been evacuated from building areas when work on structurally impaired roof decking is scheduled to begin.

PART 2 PRODUCTS

2.01 COMPONENTS

A. See the following sections for additional information on components relating to this work:
   1. Replacement and removal of existing roofing system in preparation for entire new roofing system, see Section 07 5100.
   2. Remove existing flashing and counterflashings in preparation for replacement of these materials as part of this work, see Section 07 6200 for material requirements.

2.02 MATERIALS

A. Temporary Roofing Protection Materials:
   1. Contractor's responsibility to select appropriate materials for temporary protection of roofing areas as determined necessary for this work.

PART 3 EXECUTION

3.01 FASTENER PULL-OUT TESTING

A. Prior to Project start, perform fastener pull-out tests according to SPRI FX-1, and submit test report to Architect before installing new roofing system.

1. Obtain roofing manufacturer's approval to proceed with specified fastening pattern. Roofing manufacturer may be required to submit revised fastening pattern commensurate with pull-out test results.

3.02 EXAMINATION

A. Verify that existing roof surface has been cleared of materials being removed from existing roofing system and ready for next phase of work as required.

3.03 PREPARATION

A. Protect existing roofing system that is not to be rehabilitated.
   1. Limit traffic and material storage to areas of existing roofing that have been protected.
   2. Maintain temporary protection and leave in place until replacement roofing has been completed. Remove temporary protection on completion of reroofing.
   3. Minimum requirements for existing roof protection shall include the following:
      a. Sacrificial membrane slip sheet.
      b. Minimum 1-inch thick XPS or Polyisocyanurate insulation.
      c. 1/2" CDX plywood. Secure plywood sheets with connectors and mechanical fasteners to form continuous membrane protection over area to be traversed. Provide delineators and safety/warning lines to confine all traffic to plywood walkway.

B. Coordinate with Owner to shut down air-intake equipment in the vicinity of the Work. Cover air-intake louvers before proceeding with reroofing work that could affect indoor air quality or activate smoke detectors in the ductwork.

C. During selected removal operations, have sufficient and suitable materials on-site to facilitate rapid installation of temporary protection in the event of unexpected rain.

D. Maintain roof drains in functioning condition to ensure roof drainage at end of each workday. Prevent debris from entering or blocking roof drains and conductors. Use roof-drain plugs specifically designed for this purpose. Remove roof-drain plugs at end of each workday, when no work is taking place, or when rain is forecast.
   1. If roof drains are temporarily blocked or unserviceable due to roofing system removal or partial installation of new roofing system, provide alternative drainage method to remove water and eliminate ponding. Do not permit water to enter into or under existing roofing system components that are to remain.

E. Sweep roof surface clean of loose matter.

3.04 MATERIAL REMOVAL

A. Full Roof Tear-Off: Remove existing roofing and other roofing system components down to the deck.
   1. Inspect wood blocking, curbs, and nailers for deterioration and damage. If wood blocking, curbs, or nailers have deteriorated, immediately notify Architect.

B. Transport and legally dispose of demolished materials. Do not permit demolished materials to obstruct any rooftop drainage system.

3.05 DECK PREPARATION

A. Inspect deck after tear-off of roofing system.

B. If broken or loose fasteners that secure deck panels to one another or to structure are observed, or if deck appears or feels inadequately attached, immediately notify Architect. Do not proceed with installation until directed by Architect.

C. If deck surface is unsuitable for receiving new roofing or if structural integrity of deck is suspect, immediately notify Architect. Do not proceed with installation until directed by Architect.

3.06 DISPOSAL

A. Collect demolished materials and place in containers. Promptly dispose of demolished materials. Do not allow demolished materials to accumulate on-site.

1. Storage or sale of demolished items or materials on-site is not permitted.

B. Transport and legally dispose of demolished materials off Owner's property.

3.07 INSTALLATION

A. Coordinate scope of this work with requirements for installation of new roofing system, see Section 07 5100 for additional requirements.

END OF SECTION

This page intentionally left blank

SECTION 07 1400
FLUID-APPLIED WATERPROOFING

PART 1 GENERAL

1.01 SECTION INCLUDES

A. Fluid-Applied Waterproofing:
   1. Polyurethane waterproofing.

1.02 RELATED REQUIREMENTS

A. Section 03 3000 - Cast-in-Place Concrete: Concrete substrate.

B. Section 07 2100 - Thermal Insulation: Insulation used for protective cover.

C. Section 07 6200 - Sheet Metal Flashing and Trim: Metal counterflashings.

1.03 REFERENCE STANDARDS

A. ASTM C836/C836M - Standard Specification for High Solids Content, Cold Liquid-Applied Elastomeric Waterproofing Membrane for Use with Separate Wearing Course; 2018 (Reapproved 2022).

B. ASTM D412 - Standard Test Methods for Vulcanized Rubber and Thermoplastic Elastomers--Tension; 2016 (Reapproved 2021).

C. ASTM D2240 - Standard Test Method for Rubber Property--Durometer Hardness; 2015 (Reapproved 2021).

D. ASTM D4541 - Standard Test Method for Pull-Off Strength of Coatings Using Portable Adhesion Testers; 2022.

E. ASTM E96/E96M - Standard Test Methods for Gravimetric Determination of Water Vapor Transmission Rate of Materials; 2023.

F. ASTM E154/E154M - Standard Test Methods for Water Vapor Retarders Used in Contact with Earth Under Concrete Slabs, on Walls, or as Ground Cover; 2008a (Reapproved 2019).

G. ICC-ES AC29 - Acceptance Criteria for Cold, Liquid-Applied, Below-Grade, Exterior Dampproofing and Waterproofing Materials; 2011, with Editorial Revision (2020).

H. NRCA (WM) - The NRCA Waterproofing Manual; 2021.

1.04 SUBMITTALS

A. Product Data: Provide data for membrane, surface conditioner, flexible flashings, joint cover sheet, and joint and crack sealants.

B. Shop Drawings: Indicate special joint or termination conditions and conditions of interface with other materials.

C. Certificate: Certify that products meet or exceed specified requirements.

D. Manufacturer's Installation Instructions: Indicate special procedures, perimeter conditions requiring special attention, and acceptable installation temperatures.

E. Warranty:
   1. Submit installer's certification that installation complies with warranty conditions for the waterproofing membrane.

1.05 QUALITY ASSURANCE

A. Manufacturer Qualifications: Company specializing in manufacturing products specified in this section, with not less than three years documented experience.

B. Installer Qualifications: Company specializing in performing work of the type specified and with at least three years of documented experience.

1.06 MOCK-UP

A. Construct mock-up consisting of 100 sq ft of horizontal waterproofed panel; to represent finished work including internal and external corners, drainage panel, base flashings, control joints, expansion joints, counterflashings, and protective cover.

B. See Section 01 4000 - Quality Requirements for additional requirements.

C. Locate where directed.

D. Mock-up may remain as part of this Work.

1.07 FIELD CONDITIONS

A. Maintain ambient temperatures above 40 degrees F for 24 hours before and during application and until cured.

1.08 WARRANTY

A. Contractor shall correct defective Work within a five year period after Date of Substantial Completion; remove and replace materials concealing waterproofing at no cost to Owner.

B. Provide five year manufacturer warranty for waterproofing failing to resist penetration of water, except where such failures are the result of structural failures of building. Hairline cracking of concrete due to temperature change or shrinkage is not considered a structural failure.

PART 2 PRODUCTS

2.01 MANUFACTURERS

A. Polyurethane Waterproofing:
   1. Tremco Commercial Sealants & Waterproofing; TREMproof 250GC: www.tremcosealants.com/#sle.
   2. Substitutions: See Section 01 6000 - Product Requirements.

2.02 FLUID APPLIED WATERPROOFING MATERIALS

A. Polyurethane Waterproofing: Cold-applied one or two component, high solids content polyurethane, complying with ASTM C836/C836M.
   1. Cured Thickness: 215 mils, 0.215 inch, minimum.
      a. Apply to specified thickness in multiple lifts as recommended by manufacturer.
   2. Tensile Strength: 200 psi, minimum, measured in accordance with ASTM D412.
   3. Ultimate Elongation: 600 percent, minimum, measured in accordance with ASTM D412.
   4. Durometer Hardness, Type A: 30, minimum, in accordance with ASTM D2240.
   5. Permeance: 0.03 perm, measured in accordance with ASTM E96/E96M.
   6. Adhesion: Greater than 150 psi, measured in accordance with ASTM D4541.

2.03 ACCESSORIES

A. Sealant for Joints and Cracks in Substrate: Type compatible with waterproofing material and as recommended by waterproofing manufacturer.
   1. Manufacturers:
      a. Tremco Commercial Sealants & Waterproofing; Tremco Dymonic 100: www.tremcosealants.com.
      b. Substitutions: 01 6000 - Product Requirements.

B. Reinforcing Fabric for Between Liquid Applied Membranes (LAM): Polyester fabric, unsaturated spun bond and nonwoven, used as reinforcement between LAM waterproofing systems.
   1. Thickness: 9.5 mil, 0.0095 inch, minimum.

C. Protection Mat: Polyester mat at 14 oz/sq yd to protect vertical or horizontal waterproofing membranes.
   1. Manufacturers:
      a. Tremco Commercial Sealants & Waterproofing; Tremco Protection Mat: www.tremcosealants.com/#sle.

b. Substitutions: See Section 01 6000 - Product Requirements.

D. Drainage Panel: Drainage layer with geotextile filter fabric on earth side.
1. Manufacturers:
a. Tremco Commercial Sealants & Waterproofing; TREMDrain: www.tremcosealants.com/#sle.

E. Termination Bar: As recommended by membrane and protection board manufacturer.

F. Cant Strips: Premolded composition material.

PART 3 EXECUTION

3.01 EXAMINATION

A. Verify substrate surfaces are free of frozen matter, dampness, loose particles, cracks, pits, projections, penetrations, or foreign matter detrimental to adhesion or application of waterproofing system.

B. Verify that substrate surfaces are smooth, free of honeycomb or pitting, and not detrimental to full contact bond of waterproofing materials.

C. Verify items that penetrate surfaces to receive waterproofing are securely installed.

3.02 PREPARATION

A. Protect adjacent surfaces from damage not designated to receive waterproofing.

B. Clean and prepare surfaces to receive waterproofing in accordance with manufacturer's instructions.

C. Do not apply waterproofing to surfaces unacceptable to waterproofing manufacturer.

D. Fill non-moving joints and cracks with a filler compatible with waterproofing materials.

E. Seal moving cracks with sealant and non-rigid filler, using procedures recommended by sealant and waterproofing manufacturers.

F. Prepare building expansion joints at locations as indicated on drawings.

G. Install cant strips at inside corners.

3.03 INSTALLATION

A. Install waterproofing to specified minimum thickness in accordance with manufacturers instructions and NRCA (WM) applicable requirements.

B. Apply primer or surface conditioner at a rate recommended by manufacturer, and protect conditioner from rain or frost until dry.

C. At joints and cracks less than 1/2 inch in width including joints between horizontal and vertical surfaces, apply 12 inch wide strip of joint cover sheet.

D. At joints from 1/2 inch to 1 inch in width, loop joint cover sheet down into joint between 1-1/4 inch to 1-3/4 inch, and extend sheet at least 6 inches on either side of expansion joint.

E. Center joint cover sheet over joints, roll sheet into 1/8 inch thick coating of waterproofing material and apply second coat over sheet extending at least 6 inches beyond sheet edges.

F. Apply extra thickness of waterproofing material at corners, intersections, and angles.

G. Flexible Flashings: Seal items watertight that penetrate through waterproofing membrane with flexible flashings.

H. Seal membrane and flashings to adjoining surfaces.
1. Install termination bar along edges.
2. Install counterflashing over exposed edges.

3.04 INSTALLATION - DRAINAGE PANEL AND PROTECTION BOARD

A. Place drainage panel directly against membrane, butt joints, place to encourage drainage downward, and scribe and cut boards around projections, penetrations, and interruptions.

B. Place protection board directly against drainage panel; butt joints, and scribe and cut boards around projections, penetrations, and interruptions.

3.05 PROTECTION

A. Do not permit traffic over unprotected or uncovered membrane.

END OF SECTION

SECTION 07 1900
WATER REPELLENTS

PART 1 GENERAL

1.01 SECTION INCLUDES

A. Water repellents applied to exterior, masonry surfaces.

B. Pressure washing.

1.02 RELATED REQUIREMENTS

A. Section 01 6116 - Volatile Organic Compound (VOC) Content Restrictions.

B. Section 04 0100 - Maintenance of Masonry

C. Section 04 2613 - Masonry Veneer

1.03 REFERENCE STANDARDS

A. ASTM C140/C140M - Standard Test Methods for Sampling and Testing Concrete Masonry Units and Related Units; 2023.

B. ASTM D3960 - Standard Practice for Determining Volatile Organic Compound (VOC) Content of Paints and Related Coatings; 2005 (Reapproved 2018).

C. ASTM D5095 - Standard Test Method for Determination of the Nonvolatile Content in Silanes, Siloxanes and Silane-Siloxane Blends Used in Masonry Water Repellent Treatments; 1991 (Reapproved 2022).

1.04 ADMINISTRATIVE REQUIREMENTS

A. Preinstallation Meeting: Convene a meeting at least one week prior to starting work; require attendance of affected installers; invite Architect and Owner.

1.05 SUBMITTALS

A. See Section 01 3000 - Administrative Requirements for submittal procedures.

B. Product Data: Provide product description, details of tests performed, limitations, and chemical composition.

C. Manufacturer's Installation Instructions: Indicate special procedures and conditions requiring special attention; cautionary procedures required during application.

D. Manufacturer's Certificate: Certify that products meet or exceed specified requirements.

E. Installer's Qualification Statement.

F. Maintenance Materials: Furnish the following for Owner's use in maintenance of project.
   1. See Section 01 6000 - Product Requirements for additional provisions.

1.06 QUALITY ASSURANCE

A. Installer Qualifications: Company specializing in performing the work of this section with minimum 3 years experience.

1.07 MOCK-UPS

A. See Section 01 4000 - Quality Requirements for additional requirements.

B. Prepare representative surface 36 by 36 inches in size using specified materials and preparation and application methods on surfaces identical to those to be coated; approved mock-up constitutes standard for workmanship.

C. Mock-up may remain as part of work.

1.08 FIELD CONDITIONS

A. Protect liquid materials from freezing.

B. Do not apply water repellent when ambient temperature is lower than 50 degrees F or higher than 100 degrees F.

C. Do not apply water repellents when wind velocity is higher than 20 mph.

D. Do not apply water repellents when rain threatens.

1.09 WARRANTY

A. See Section 01 7800 - Closeout Submittals for additional warranty requirements.

B. Correct defective Work within a five year period after Date of Substantial Completion.

PART 2 PRODUCTS

2.01 MANUFACTURERS

A. Silane, Siloxane, Silane-Siloxane Blend, and Siliconate Water Repellents:
   1. PROSOCO, Inc: www.prosoco.com.
   2. Substitutions: See Section 01 6000 - Product Requirements.

2.02 MATERIALS

A. Water Repellent: Non-glossy, colorless, penetrating, water-vapor-permeable, non-yellowing sealer, that dries invisibly leaving appearance of substrate unchanged.
   1. Applications: All new and existing vertical masonry surfaces and non-traffic horizontal surfaces.
   2. Number of Coats: Two.
   3. VOC Content: Less than 600 g/L, when tested in accordance with ASTM D3960 or ASTM D5095.
   4. Moisture Absorption When Applied to Masonry: Five percent, maximum, when tested in accordance with ASTM C140/C140M using masonry sample completely coated with water repellent.
   5. Maintains dry appearance when wetted.
   6. Products: Silane, siloxane, silane-siloxane blend, or siliconate that reacts chemically with concrete and masonry; minimum 90 percent nonvolatile content by weight.
      a. Prosoco, Inc; Blok-Guard & Graffiti Control 15
      b. Professional Products of Kansas, Inc.; Water Sealant & Anti Graffitiant PWS-15 Super
      c. Substitutions: See Section01 6000-Product Requirements.

PART 3 EXECUTION

3.01 EXAMINATION

A. Verify existing conditions before starting work.

B. Verify joint sealants are installed and cured.

C. Verify surfaces to be coated are dry, clean, and free of efflorescence, oil, or other matter detrimental to application of water repellent.

3.02 PREPARATION

A. Protection of Adjacent Work:
   1. Protect adjacent landscaping, property, and vehicles from drips and overspray.
   2. Protect adjacent surfaces not intended to receive water repellent.

B. Prepare surfaces to be coated as recommended by water repellent manufacturer for best results.

C. Do not start work until masonry mortar substrate is cured a minimum of 30 days.

D. Remove oil and foreign substances with a chemical solvent that will not affect water repellent.

E. Pressure wash surfaces to be coated.
   1. Firm Masonry (Concrete Masonry Units): High pressure wash at 1,500 to 4,000 psi, at 6 to 12 inches from surface.

F. Allow surfaces to dry completely to degree recommended by water repellent manufacturer before starting coating work.

3.03 APPLICATION

A. Apply water repellent in accordance with manufacturer's instructions, using procedures and application methods recommended as producing the best results.

B. Apply at rate recommended by manufacturer, continuously over entire surface.

C. Apply two coats, minimum.

D. Remove water repellent from unintended surfaces immediately by a method instructed by water repellent manufacturer.

END OF SECTION

This page intentionally left blank

SECTION 07 2100
THERMAL INSULATION

PART 1 GENERAL

1.01 SECTION INCLUDES

A. Board insulation and integral vapor retarder at perimeter foundation wall and underside of floor slabs.

B. Batt insulationand vapor retarder in exterior wall construction.

C. Batt insulation for filling perimeter window and door shim spaces and crevices in exterior wall and roof.

1.02 RELATED REQUIREMENTS

A. Section 01 6116 - Volatile Organic Compound (VOC) Content Restrictions.

B. Section 06 1000 - Rough Carpentry: Supporting construction for batt insulation.

C. Section 07 2500 - Weather Barriers: Separate air barrier and vapor retarder materials.

D. Section 07 5400 - Thermoplastic Membrane Roofing: Board insulation over low slope roof deck.

E. Section 07 8400 - Firestopping: Insulation as part of fire-rated through-penetration assemblies.

F. Section 09 2116 - Gypsum Board Assemblies: Acoustic insulation inside walls and partitions.

1.03 REFERENCE STANDARDS

A. ASTM C578 - Standard Specification for Rigid, Cellular Polystyrene Thermal Insulation; 2022.

B. ASTM E84 - Standard Test Method for Surface Burning Characteristics of Building Materials; 2023b.

1.04 SUBMITTALS

A. See Section 01 3000 - Administrative Requirements for submittal procedures.

B. Product Data: Provide data on product characteristics, performance criteria, and product limitations.

C. Manufacturer's Certificate: Certify that products meet or exceed specified requirements.

D. Manufacturer's Installation Instructions: Include information on special environmental conditions required for installation and installation techniques.

E. ABAA Manufacturer Qualification: Submit documentation of current evaluation of proposed manufacturer and materials.

1.05 QUALITY ASSURANCE

A. Air Barrier Association of America (ABAA) Evaluated Materials Program (EAP); www.airbarrier.org/#sle: Use evaluated materials from a single manufacturer regularly engaged in air barrier material manufacture. Use secondary materials approved in writing by primary material manufacturer.

1.06 FIELD CONDITIONS

A. Do not install insulation adhesives when temperature or weather conditions are detrimental to successful installation.

PART 2 PRODUCTS

2.01 APPLICATIONS

A. Insulation Under Concrete Slabs: Extruded polystyrene (XPS) board.

B. Insulation at Perimeter of Foundation: Extruded polystyrene (XPS) board.

C. Insulation on Inside of Concrete and Masonry Exterior Walls: Mineral fiber board.

D. Insulation in Wood Framed Walls: Batt insulation with separate vapor retarder.

E. Insulation in Wood Framed Ceiling Structure: Batt insulation with separate vapor retarder.

2.02 FOAM BOARD INSULATION MATERIALS

A. Extruded Polystyrene (XPS) Board Insulation: Comply with ASTM C578 with either natural skin or cut cell surfaces.
   1. Type and Compressive Resistance: Type IV, 25 psi (173 kPa), minimum.
   2. Flame Spread Index (FSI): Class A - 0 to 25, when tested in accordance with ASTM E84.
   3. Smoke Developed Index (SDI): 450 or less, when tested in accordance with ASTM E84.
   4. Type and Thermal Resistance, R-value: Type IV, 5.0 (0.88), minimum, per 1 inch thickness at 75 degrees F mean temperature.
      a. Required total R-Value as indicated on Drawings.
   5. Board Edges: Tongue-and-groove or shiplap.
   6. Products:
      a. Kingspan Insulation LLC; GreenGuard GG25-LG XPS Insulation Board: www.kingspan.com/#sle.
      b. Owens Corning Corporation; FOAMULAR Type IV Extruded Polystyrene (XPS) Insulation: www.ocbuildingspec.com/#sle.
      c. Substitutions: See Section 01 6000 - Product Requirements.

2.03 MINERAL FIBER BOARD INSULATION MATERIALS

2.04 BATT INSULATION MATERIALS

A. Where batt insulation is indicated, either glass fiber or mineral fiber batt insulation may be used, at Contractor's option.

B. Glass Fiber Batt Insulation: Flexible preformed batt or blanket, complying with ASTM C665; friction fit.
   1. Combustibility: Non-combustible, when tested in accordance with ASTM E136, except for facing, if any.
   2. Formaldehyde Content: Zero.
   3. Thermal Resistance: R-value as indicated on drawings.
   4. Facing: Unfaced.
   5. Products:
      a. Owens Corning Corporation; EcoTouch PINK FIBERGLAS Insulation: www.ocbuildingspec.com/#sle.
      b. Substitutions: See Section 01 6000 - Product Requirements.

C. Mineral Fiber Batt Insulation: Flexible or semi-rigid preformed batt or blanket, complying with ASTM C665; friction fit; unfaced flame spread index of 0 (zero) when tested in accordance with ASTM E84.
   1. Smoke Developed Index: 0 (zero), when tested in accordance with ASTM E84.
   2. Thermal Resistance: R-value as indicated on drawings.
   3. Facing: Unfaced
   4. Products:
      a. Knauf Insulation; EcoBatt Insulation: www.knaufinsulation.com/#sle.
      b. ROCKWOOL; COMFORTBATT: www.rockwool.com/#sle.
      c. Substitutions: See Section 01 6000 - Product Requirements.

2.05 ACCESSORIES

A. Spray Foam Insulation: For use at cracks - Dow 'Great Stuff Pro Window and Door' or approved.

B. Insulation Fasteners: Appropriate for purpose intended in accordance with curtain wall manufacturer’s written recommendations.

PART 3 EXECUTION

3.01 EXAMINATION

A. Verify that substrate, adjacent materials, and insulation materials are dry and that substrates are ready to receive insulation.

B. Verify substrate surfaces are flat, free of honeycomb, fins, irregularities, or materials or substances that may impede adhesive bond.

3.02 BOARD INSTALLATION AT FOUNDATION PERIMETER

A. Install boards horizontally on foundation perimeter.
   1. Install in running bond pattern.
   2. Butt edges and ends tightly to adjacent boards and to protrusions.

B. Cut and fit insulation tightly to protrusions or interruptions to the insulation plane.

3.03 BOARD INSTALLATION AT EXTERIOR WALLS

A. Install boards horizontally on walls.

B. Cut and fit insulation tightly to protrusions or interruptions to the insulation plane.

3.04 BOARD INSTALLATION UNDER CONCRETE SLABS

A. Place insulation under slabs on grade after base for slab has been compacted.

B. Cut and fit insulation tightly to protrusions or interruptions to the insulation plane.

C. Prevent insulation from being displaced or damaged while placing vapor retarder and placing slab.

3.05 BATT INSTALLATION

A. Install insulation and vapor retarder in accordance with manufacturer's instructions.

B. Install in exterior wall spaces without gaps or voids. Do not compress insulation.

C. Trim insulation neatly to fit spaces. Insulate miscellaneous gaps and voids.

D. Fit insulation tightly in cavities and tightly to exterior side of mechanical and electrical services within the plane of the insulation.

E. At wood framing, place vapor retarder on warm side of insulation by stapling at 6 inches on center. Lap and seal sheet retarder joints over face of member.

F. Tape seal tears or cuts in vapor retarder.

G. Extend vapor retarder tightly to full perimeter of adjacent window and door frames and other items interrupting the plane of the membrane; tape seal in place.
   1. Install vapor retarder in accordance with manufacturers instructions.
   2. Install vapor retarder with product name facing interior.

H. Coordinate work of this section with requirements for vapor retarder, see Section 07 2600.

3.06 FIELD QUALITY CONTROL

A. See Section 01 4000 - Quality Requirements for additional requirements.

3.07 PROTECTION

A. Do not permit installed insulation to be damaged prior to its concealment.

END OF SECTION

This page intentionally left blank

SECTION 07 2119
FOAMED-IN-PLACE INSULATION

PART 1 GENERAL

1.01 SECTION INCLUDES

A. Foamed-in-place insulation.
   1. Underside of roof where batt insulation installation is not possible.

1.02 REFERENCE STANDARDS

A. ASTM C518 - Standard Test Method for Steady-State Thermal Transmission Properties by Means of the Heat Flow Meter Apparatus; 2021.

B. ASTM D1621 - Standard Test Method for Compressive Properties of Rigid Cellular Plastics; 2016 (Reapproved 2023).

C. ASTM D1622 - Standard Test Method for Apparent Density of Rigid Cellular Plastics; 2020.

D. ASTM D1623 - Standard Test Method for Tensile and Tensile Adhesion Properties of Rigid Cellular Plastics; 2017 (Reapproved 2023).

E. ASTM D2842 - Standard Test Method for Water Absorption of Rigid Cellular Plastics; 2019.

F. ASTM E84 - Standard Test Method for Surface Burning Characteristics of Building Materials; 2023b.

G. ASTM E96/E96M - Standard Test Methods for Gravimetric Determination of Water Vapor Transmission Rate of Materials; 2023.

H. ASTM E2178 - Standard Test Method for Determining Air Leakage Rate and Calculation of Air Permeance of Building Materials; 2021a.

I. FM 4880 - Evaluating the Fire Performance of Insulated Building Panel Assemblies and Interior Finish Materials; 2017.

J. NFPA 275 - Standard Method of Fire Tests for the Evaluation of Thermal Barriers; 2022.

K. NFPA 286 - Standard Methods of Fire Tests for Evaluating Contribution of Wall and Ceiling Interior Finish to Room Fire Growth; 2019.

L. UL 1040 - Standard for Safety Fire Test of Insulated Wall Construction; Current Edition, Including All Revisions.

M. UL 1715 - Standard for Safety Fire Test of Interior Finish Material; Current Edition, Including All Revisions.

1.03 ADMINISTRATIVE REQUIREMENTS

A. Preinstallation Meeting: Convene one week prior to commencing work of this section.

1.04 SUBMITTALS

A. See Section 01 3000 - Administrative Requirements for submittal procedures.

B. Product Data: Provide product description, insulation properties, overcoat properties, and preparation requirements.

C. Certificates: Certify that products of this section meet or exceed specified requirements.

D. ABAA Field Quality Control Submittals: Submit third-party reports of testing and inspection as required by ABAA QAP.

E. Manufacturer's Installation Instructions: Indicate special procedures, and perimeter conditions requiring special attention.

F. ABAA Manufacturer Qualification: Submit documentation of current evaluation of proposed manufacturer and materials.

G. ABAA Installer Qualification: Submit documentation of current contractor accreditation and current installer certification. Keep copies of all contractor accreditation and installer certification on site during and after installation. Present on-site documentation upon request.

1.05 QUALITY ASSURANCE

A. Manufacturer Qualifications: Company specializing in manufacturing products of the type specified in this section, with not less than three years of documented experience.

B. Installer Qualifications: Company specializing in performing work of the type specified, with minimum three years documented experience, and approved by manufacturer.

C. Air Barrier Association of America (ABAA) Quality Assurance Program (QAP); www.airbarrier.org/#sle:
   1. Installer Qualification: Use accredited contractor, certified installers, evaluated materials, and third-party field quality control audit.
   2. Manufacturer Qualification: Use evaluated materials from a single manufacturer regularly engaged in air barrier material manufacture. Use secondary materials approved in writing by primary material manufacturer.

PART 2 PRODUCTS

2.01 MATERIALS

A. Foamed-In-Place Insulation: Medium-density, rigid or semi-rigid, open cell or closed cell polyurethane foam; foamed on-site, using blowing agent of water or non-ozone-depleting gas.
   1. Regulatory Requirements: Comply with applicable code for flame and smoke, concealment, and fire protection requirements.
      a. Fire Protection: Provide 15-minute thermal barrier of 1/2 inch gypsum board or equivalent material complying with NFPA 275 test method, or foamed-in-place insulation either exposed or with covering that complies with FM 4880, NFPA 286, UL 1040, or UL 1715.
   2. Thermal Resistance: R-value of 5.0, minimum, per 1 inch thickness at 75 degrees F mean temperature when tested in accordance with ASTM C518.
   3. Water Vapor Permeance: Vapor retarder; 2 perms, maximum, when tested at intended thickness in accordance with ASTM E96/E96M, desiccant method.
   4. Water Absorption: Less than 2 percent by volume, maximum, when tested in accordance with ASTM D2842.
   5. Air Permeance: 0.04 cfm per square foot, maximum, when tested at intended thickness in accordance with ASTM E2178 at 1.57 psf.
   6. Closed Cell Content: At least 90 percent.
   7. Surface Burning Characteristics: Flame spread/smoke developed index of 25/450, maximum, when tested in accordance with ASTM E84.
   8. Products:
      a. BASF Corporation; WALLTITE US: www.spf.basf.com/#sle.
      b. Icynene-Lapolla; Icynene ProSeal: www.icynene.com/#sle.
      c. Johns Manville; JM Corbond III Closed Cell Spray Polyurethane Foam: www.jm.com/#sle.
   9. Substitutions: See Section 01 6000 - Product Requirements.

2.02 ACCESSORIES

A. Primer: As required by insulation manufacturer.

PART 3 EXECUTION

3.01 EXAMINATION

A. Verify work within construction spaces or crevices is complete before insulation application.

B. Verify that surfaces are clean, dry, and free of matter that may inhibit insulation adhesion.

3.02 PREPARATION

A. Mask and protect adjacent surfaces from over spray or dusting.

B. Apply primer in accordance with manufacturer's instructions.

3.03 APPLICATION

A. Apply insulation in accordance with manufacturer's instructions.

B. Apply insulation by spray method, to a uniform monolithic density without voids.

C. Apply to achieve a thermal resistance R-value of 21.

D. Patch damaged areas.

E. Trim excess away for applied trim or remove as required for continuous sealant bead.

3.04 PROTECTION

A. Do not permit subsequent construction work to disturb applied insulation.

END OF SECTION

This page intentionally left blank

SECTION 07 2500
WEATHER BARRIERS

PART 1 GENERAL

1.01 SECTION INCLUDES

A. Air Barriers: Materials that form a system to stop passage of air through exterior walls, joints between exterior walls and roof, and joints around frames of openings in exterior walls.

B. Flexible flashings and accessories.

1.02 RELATED REQUIREMENTS

A. Section 07 2100 - Thermal Insulation: Weather barrier installed in conjunction with batt insulation.

B. Section 07 6200 - Sheet Metal Flashing and Trim: Metal flashings installed in conjunction with weather barriers.

C. Section 07 2100 - Thermal Insulation: Vapor retarder installed in conjunction with batt insulation.

D. Section 07 4213 - Metal Wall Panels - Weather Barrier installed as part of exterior cladding system.

E. Section 07 9200 - Joint Sealants: Sealing of exterior joints.

1.03 DEFINITIONS

A. Weather Barriers: Materials or assemblies forming water-resistive barriers, air barriers, vapor retarders, or combination of one or more assemblies.

B. Air Barrier: Air tight barrier made of material that is relatively air impermeable but water vapor permeable, both to the degree specified, with sealed seams and with sealed joints to adjacent surfaces. Note: For the purposes of this specification, vapor impermeable air barriers are classified as vapor retarders.

1.04 REFERENCE STANDARDS

A. AATCC Test Method 127 - Test Method for Water Resistance: Hydrostatic Pressure; 2018, with Editorial Revision (2019).

B. ASTM E84 - Standard Test Method for Surface Burning Characteristics of Building Materials; 2023b.

C. ASTM E96/E96M - Standard Test Methods for Gravimetric Determination of Water Vapor Transmission Rate of Materials; 2023.

D. ASTM E2178 - Standard Test Method for Determining Air Leakage Rate and Calculation of Air Permeance of Building Materials; 2021a.

1.05 SUBMITTALS

A. See Section 01 3000 - Administrative Requirements for submittal procedures.

B. Product Data: Provide data on material characteristics and performance criteria.

C. Shop Drawings: Provide drawings of special joint conditions.

D. ABAA Field Quality Control Submittals: Submit third-party reports of testing and inspection required by ABAA QAP.

E. Manufacturer's Installation Instructions: Indicate preparation, installation methods, and storage and handling criteria.

F. ABAA Manufacturer Qualification: Submit documentation of current evaluation of proposed manufacturer and materials.

G. ABAA Installer Qualification: Submit documentation of current contractor accreditation and current installer certification; keep copies of each contractor accreditation and installer certification on site during and after installation, and present on-site documentation upon request.

H. Warranty Documentation for Installation of Building Rainscreen Assembly: Submit installer warranty and ensure that forms have been completed in Owner's name and registered with installer.

1.06 QUALITY ASSURANCE

A. Air Barrier Association of America (ABAA) Quality Assurance Program (QAP); www.airbarrier.org/#sle:
   1. Installer Qualification: Use accredited contractor, certified installers, evaluated materials, and third-party field quality control audit.
   2. Manufacturer Qualification: Use evaluated materials from a single manufacturer regularly engaged in air barrier material manufacture, and use secondary materials approved in writing by primary material manufacturer.

1.07 FIELD CONDITIONS

A. Maintain temperature and humidity recommended by materials manufacturers before, during, and after installation.

PART 2 PRODUCTS

2.01 WEATHER BARRIER ASSEMBLIES

A. Air Barrier (WRB):
   1. On inside surface of tilt-up concrete wall use air barrier coating.
   2. On outside surface of sheathing of exterior walls use air barrier sheet, self-adhesive type.

B. Interior Vapor Retarder:
   1. On inside face of studs of exterior walls, under cladding, use mechanically fastened vapor retarder sheet.

C. Exterior Vapor Retarder:
   1. On outside surface of sheathing under parapet flashings and other flashings exposed to heat use high temperature vapor retarder sheet, self-adhesive type (HTSAM).

D. Flexible Flashings:
   1. At exterior window flashings and around through-wall penetrations use Foil-Faced Self-Adhered Membrane (FFSAM) .
   2. On general membrane flashings use Self-Adhered Membrane (SAM).

2.02 AIR BARRIER MATERIALS (WATER VAPOR PERMEABLE AND WATER-RESISTIVE)

A. Where weather barrier is indicated, either self-adhered or fluid-applied membrane may be used, at Contractor's option.

B. Air Barrier Sheet, Self-Adhered:
   1. Air Permeance: 0.004 cfm/sq ft, maximum, when tested in accordance with ASTM E2178.
   2. Water Vapor Permeance: 10 perms, minimum, when tested in accordance with ASTM E96/E96M Procedure A (desiccant procedure).
   3. Water Penetration Resistance Around Nails: Pass, when tested in accordance with ASTM D1970/D1970M (modified).
   4. Ultraviolet (UV) and Weathering Resistance: Approved in writing by manufacturer for up to 90 days of weather exposure.
   5. Surface Burning Characteristics: Flame spread index of 25 or less, smoke developed index of 450 or less (Class A), when tested in accordance with ASTM E84.
   6. Seam and Perimeter Tape: As recommended by sheet manufacturer.
   7. Manufacturers:
      a. GCP Applied Technologies; Perm-A-Barrier VPS: www.gcpat.com/#sle.
      b. Henry Company; Blueskin VP160: www.us.henry.com.
      c. VaproShield, LLC; WrapShield SA - Self-Adhered: www.vaproshield.com/#sle.
      d. Substitutions: See Section 01 6000 - Product Requirements.

C. Air Barrier, Fluid Applied: Vapor permeable, elastomeric waterproofing.

1. Air Barrier Coating:
    a. Material: Silyl-terminated polyurethane.
    b. Dry Film Thickness (DFT): 20 mils (0.020 inch), minimum.
    c. Air Permeance: 0.004 cubic feet per minute per square foot, maximum, when tested in accordance with ASTM E2178.
    d. Water Vapor Permeance: 16 perms, minimum, when tested in accordance with ASTM E96/E96M, Procedure B.
    e. Ultraviolet (UV) and Weathering Resistance: Approved in writing by manufacturer for up to 180 days of weather exposure after application.
    f. Surface Burning Characteristics: Flame spread index of 25 or less, smoke developed index of 450 or less, when tested in accordance with ASTM E84.
    g. Nail Sealability: Pass, when tested in accordance with ASTM D1970/D1970M.
    h. Sealants, Tapes and Accessories: As recommended by coating manufacturer.
    i. Manufacturers:
        1) GCP Applied Technologies; Perm-A-Barrier VPL 50: www.gcpat.com.
        2) Henry Company; Air-Bloc 33MR: www.henry.com.
        3) Tremco; ExoAir 230; www.tremcosealants.com.
        4) Substitutions: See Section 01 6000 - Product Requirements.

2.03 VAPOR RETARDER MATERIALS (AIR BARRIER AND WATER-RESISTIVE)

A. Vapor Retarder Sheet Type (HTSAM): ASTM D1970/D1970M.
    1. Manufacturers:
        a. Henry Company; Blueskin PE200 HT; www.us.henry.com
        b. Grace Construction; Ultra: www.na.graceconstruction.com
        c. Substitutions: See Section 01 6000 - Product Requirements.
            1) Henry Company; Blueskin SA HT- high temp: www.us.henry.com.

B. Vapor Retarder Interior Barrier Sheet (VB): Multi-fiber reinforced polyamide film complying with ASTM C665, ASTM E96, Class A; stated by manufacturer as suitable for application indicated. Single ply polyethylene is prohibited.
    1. Water Vapor Permeance: 0.3 perm (17 ng/(Pa s sq m)), maximum, when tested in accordance with ASTM E96/E96M.
    2. Seam and Perimeter Tape: Polyethylene self adhering type, mesh reinforced, 2 inches 50 mm) wide, compatible with sheet material.
    3. Thickness: 2 mil.
    4. Manufacturers:
        a. CertainTeed Corporation; MEMBRAIN.
        b. b. SIGA Cover Inc.; SIGA-Majrex.
        c. c. Substitutions: See Section 01 6000 - Product Requirements.

2.04 ACCESSORIES

A. Sealants, Tapes, Primers, and Accessories for Sealing Weather Barrier and Sealing Weather Barrier to Adjacent Substrates: As specified or as recommended by weather barrier manufacturer.

B. Flexible Flashing Type FFSAM and SAM: Self-adhesive, self healing, sheet flashing complying with ASTM D1970/D1970M, except slip resistance requirement is waived if not installed on a roof.
    1. Thickness: 14 mil, 0.014 inch, nominal; exception from ASTM D1970/D1970M.
    2. Products:
        a. GCP Applied Technologies; www.gcpat.com
        b. Henry Company; www.us.henry.com
        c. Tremco; www.tremco.com
        d. Substitutions: See Section 01 6000 - Product Requirements.

C. Liquid Flashing: One part, fast curing, nonsag, elastomeric, gun grade, trowelable liquid flashing.
   1. Products:
      a. Sika Corporation; Parex WeatherFlash: www.parex.com/#sle.
      b. W. R. Meadows, Inc; Air-Shield Liquid Flashing: www.wrmeadows.com/#sle.
      c. Prosoco; R-Guard Fast Flash: www.prosoco.com
      d. Substitutions: See Section 01 6000 - Product Requirements.

D. Primer: Adhesive primer as specified or recommended by membrane manufacturer.

E. Provide all materials required for complete installation of product.

PART 3 EXECUTION

3.01 EXAMINATION

A. Verify that surfaces and conditions comply with requirements of this section.

3.02 PREPARATION

A. Remove projections, protruding fasteners, and loose or foreign matter that might interfere with proper installation.

B. Clean and prime substrate surfaces to receive adhesives and sealants in accordance with manufacturer's installation instructions.

3.03 INSTALLATION

A. Install materials in accordance with manufacturer's installation instructions.

B. Install continuous water-resistive barriers where indicated on drawings, with sheets lapped to shed water.

C. Air Barriers: Install continuous air tight barrier over surfaces indicated, with sealed seams and with sealed joints to adjacent surfaces.

D. Apply sealants within recommended temperature range in accordance with manufacturer's installation instructions.

E. Mechanically Fastened Sheets:
   1. Install sheets in shingle fashion to shed water; align horizontally.
   2. Overlap seams as recommended by manufacturer, 6 inches, minimum.
   3. Overlap at outside and inside corners as recommended by manufacturer, 12 inches, minimum.
   4. For applications indicated to be airtight, seal seams, laps, penetrations, tears, and cuts with self-adhesive tape; use only large-headed, gasketed fasteners as recommended by manufacturer.
   5. Install water-resistive barrier over jamb flashings.
   6. Install head flashings under water-resistive barrier.
   7. At framed openings with frames having nailing flanges, extend sheet into opening and over flanges; at head of opening, seal sheet over flange and flashing.

F. Self-Adhered Sheets:
   1. Prepare substrate in accordance with sheet manufacturer's installation instructions; fill and tape joints in substrate and between dissimilar materials.
   2. Lap sheets shingle-fashion to shed water and seal laps airtight.
   3. Upon placement of sheets, firmly press onto substrate with resilient hand roller; ensure that laps are firmly adhered with no gaps or fishmouths.
   4. Use same material, or other material approved by sheet manufacturer, to seal sheets to adjacent substrates, and as flashing.
   5. At expansion joints, provide transition to joint assemblies approved by sheet manufacturer.
   6. Seal top edge of flashing with termination mastic.
   7. Do not allow the rubberized asphalt surface of the flashing membrane to come in contact with the poly-sulfide sealants, creosote, uncured coal tar products or EPDM.

G. Fluid-Applied Membranes:
   1. Prepare substrate in accordance with coating manufacturer's installation instructions; treat joints in substrate and between dissimilar materials as indicated.
   2. Where exterior masonry veneer is being applied, install masonry anchors prior to placement of water-resistive barrier over masonry substrate; seal airtight around anchors.
   3. Apply flashing to seal with adjacent construction and to bridge joints in coating substrate.

H. Openings and Penetrations in Exterior Water-Resistive Barriers:
   1. Install flashing over sills, covering entire sill framing member, and extend at least 5 inches onto water-resistive barrier and at least 6 inches up jambs; mechanically fasten stretched edges.
   2. At openings filled with frames having nailing flanges, seal head and jamb flanges using a continuous bead of sealant compressed by flange and cover flanges with sealing tape at least 4 inches wide; do not seal sill flange.
   3. At openings filled with nonflanged frames, seal water-resistive barrier to each side of framing at opening using flashing at least 9 inches wide, and covering entire depth of framing.
   4. At head of openings, install flashing under water-resistive barrier extending at least 2 inches beyond face of jambs; seal water-resistive barrier to flashing.
   5. At interior face of openings, seal gaps between window and door frames and rough framing using appropriate joint sealant over backer rod.
   6. Service and Other Penetrations: Form flashing around penetrating items and seal to surface of water-resistive barrier.

3.04 FIELD QUALITY CONTROL

A. See Section 01 4000 - Quality Requirements for additional requirements.

B. Coordination of ABAA Tests and Inspections:
   1. Provide testing and inspection required by ABAA QAP.
   2. Notify ABAA in writing of schedule for air barrier work, and allow adequate time for testing and inspection.
   3. Cooperate with ABAA testing agency.
   4. Allow access to air barrier work areas and staging.
   5. Do not cover air barrier work until tested, inspected, and accepted.

C. Take digital photographs of each portion of installation prior to covering up weather barriers.

3.05 PROTECTION

A. Do not leave materials exposed to weather longer than recommended by manufacturer.

END OF SECTION

This page intentionally left blank

SECTION 07 3113
ASPHALT SHINGLES

PART 1 GENERAL

1.01 SECTION INCLUDES

A. Asphalt shingle roofing.

B. Flexible sheet membranes for eave protection, underlayment, and valley protection.

C. Flashing.

1.02 RELATED REQUIREMENTS

A. Section 06 1000 - Rough Carpentry: Roof sheathing.

B. Section 07 6200 - Sheet Metal Flashing and Trim: Edge and cap flashings.

1.03 REFERENCE STANDARDS

A. ASTM D226/D226M - Standard Specification for Asphalt-Saturated Organic Felt Used in Roofing and Waterproofing; 2017 (Reapproved 2023).

B. ASTM D1970/D1970M - Standard Specification for Self-Adhering Polymer Modified Bituminous Sheet Materials Used as Steep Roofing Underlayment for Ice Dam Protection; 2021.

C. ASTM D3161/D3161M - Standard Test Method for Wind Resistance of Steep Slope Roofing Products (Fan-Induced Method); 2020.

D. ASTM D3462/D3462M - Standard Specification for Asphalt Shingles Made from Glass Felt and Surfaced with Mineral Granules; 2023.

E. ASTM D4586/D4586M - Standard Specification for Asphalt Roof Cement, Asbestos-Free; 2007 (Reapproved 2018).

F. ASTM D7158/D7158M - Standard Test Method for Wind Resistance of Asphalt Shingles (Uplift Force/Uplift Resistance Method); 2020.

G. ASTM E108 - Standard Test Methods for Fire Tests of Roof Coverings; 2020a.

H. ASTM F1667/F1667M - Standard Specification for Driven Fasteners: Nails, Spikes, and Staples; 2021a.

I. NRCA (RM) - The NRCA Roofing Manual; 2023.

1.04 SUBMITTALS

A. See Section 01 3000 - Administrative Requirements for submittal procedures.

B. Product Data: Provide data indicating material characteristics, material characteristics, performance criteria, performance criteria, limitations, limitations, _____, and color and finish options.

C. Samples: Submit two samples of each shingle color indicating color range and finish texture/pattern ; for color selection.

D. Manufacturer's Installation Instructions: Indicate installation criteria and procedures.

E. Warranty Documentation: Submit manufacturer warranty and ensure forms have been completed in Owner's name and registered with manufacturer.

F. Maintenance Materials: Furnish the following for Owner's use in maintenance of project.
   1. See Section 01 6000 - Product Requirements for additional provisions.
   2. Extra Shingles: 10 sq ft of each type and color.

1.05 DELIVERY, STORAGE, AND HANDLING

A. See Section 01 7419 - Construction Waste Management and Disposal for packaging waste requirements.

B. Deliver and store materials with labels intact in manufacturer's unopened packaging until ready for installation.

C. When storing roofing materials on roofing system ensure no damage occurs to supporting members and other materials.

1.06 WARRANTY

A. See Section 01 7800 - Closeout Submittals for additional warranty requirements.

B. Extended Correction Period: Correct defective work within 2-year period commencing on Date of Substantial Completion.

PART 2 PRODUCTS

2.01 ASPHALT SHINGLES

A. Asphalt Shingles: Asphalt-coated glass felt, mineral granule surfaced, complying with ASTM D3462/D3462M.
   1. Fire Resistance: Class A, complying with ASTM E108.
   2. Wind Resistance: Class F, when tested in accordance with ASTM D3161/D3161M/D3161M.
   3. Warranted Wind Speed: Not greater than 60 mph.
   4. Algae resistant.
   5. Self-sealing type.
   6. Style: Match existing asphalt shingles..
   7. Color: Match existing asphalt shingles..

2.02 SHEET MATERIALS

A. Eave Protection Membrane:
   1. Eave Protection Membrane: Self-adhering polymer-modified asphalt sheet complying with ASTM D1970/D1970M; 40 mil total thickness; with strippable treated release paper and polyethylene sheet top surface.

B. Underlayment: Asphalt-saturated organic roofing felt, unperforated, complying with ASTM D226/D226M, Type I, No. 15.

2.03 ACCESSORIES

A. Roofing Nails: Standard round wire shingle type, galvanized steel, stainless steel, aluminum roofing nails, or copper roofing nails, minimum 3/8-inch head diameter, 12-gauge, 0.109-inch nail shank diameter, 1-1/2 inches long and complying with ASTM F1667/F1667M.

B. Asphalt Roof Cement: ASTM D4586/D4586M, asbestos-free.

C. Lap Cement: Fibrated cutback asphalt type, recommended for use in application of underlayment, free of toxic solvents.

2.04 METAL FLASHINGS

A. Metal Flashings: Provide sheet metal eave edge, gable edge, ridge, ridge vents, and other flashing indicated.
   1. Form sections square and accurate to profile, in maximum possible lengths, free from distortion or defects detrimental to appearance or performance.
   2. Hem exposed edges of flashings minimum 1/4 inch on underside.

B. Steel Sheet Metal: Prefinished and galvanized steel sheet, 26 gage, 0.0179 inch minimum thickness, G90/Z275 hot-dipped galvanized; PVC coated, color as selected.

PART 3 EXECUTION

3.01 EXAMINATION

A. Verify existing conditions prior to starting this work.

B. Verify roof deck is of sufficient thickness to accept fasteners.

C. Verify roof penetrations and plumbing stacks are in place and flashed to deck surface.

D. Verify roof openings are correctly framed.

E. Verify deck surfaces are dry, free of ridges, warps, or voids.

3.02 PREPARATION

A. Seal roof deck joints wider than 1/16 inch as recommended by shingle manufacturer.

B. At areas where eave protection membrane is to be adhered to substrate, fill knot holes and surface cracks with latex filler.

C. Broom clean deck surfaces before installing underlayment or eave protection.

D. Protect surrounding areas and adjacent surfaces from damage during execution of this work.

E. Install eave edge flashings tight with fascia boards, weather lap joints 2 inches and seal with roof cement, and secure flange with nails spaced ____ inches on center.

3.03 INSTALLATION

A. Eave Protection Membrane:
   1. Install eave protection membrane from eave edge to minimum 48 inches up-slope beyond interior face of exterior wall.
   2. Install eave protection membrane in accordance with manufacturer's instructions and NRCA (RM) applicable requirements.
   3. Apply 4-inch wide band of plastic cement over deck flange of eave edge flashings and embed an 18-inch wide strip of eave protection membrane. Place starter strip with eave edge flush with face of flashings, secure in place, and lap ends minimum 6 inches.
   4. Apply lap cement at rate of approximately 1.25 gal/100 sq ft over starter strip.
   5. Starting from lower edge of starter strip, lay additional 36-inch wide strips in lap cement to produce a 2-ply membrane. Weather lap plies minimum 19 inches and nail in place; lap ends minimum 6 inches and stagger end joints of each consecutive ply.

B. Underlayment:
   1. Roof Slopes Up to 4:12: Install two layers of underlayment over area not protected by eave protection, with ends and edges weather lapped minimum 4 inches; stagger end laps of each consecutive layer and nail in place.
   2. Roof Slopes Greater Than 4:12: Install underlayment perpendicular to slope of roof, with ends and edges weather lapped minimum 4 inches; stagger end laps of each consecutive layer, nail in place, and weather lap minimum 4 inches over eave protection.
   3. Weather lap and seal watertight with plastic cement any items projecting through or mounted on roof.

C. Metal Flashing:
   1. Install flashings in accordance with manufacturer's instructions and NRCA (RM) applicable requirements.
   2. Weather lap joints minimum 2 inches and seal weather tight with plastic cement.
   3. Secure in place with nails at 16 inches on center, and conceal fastenings.
   4. Items Projecting Through or Mounted on Roofing: Flash and seal weather tight with plastic cement.

D. Shingles:
   1. Install shingles in accordance with manufacturer's instructions and NRCA (RM) applicable requirements.
      a. Fasten individual shingles using two nails per shingle, or as required by manufacturer and local building code, whichever is greater.
      b. Fasten strip shingles using four nails per strip, or as required by manufacturer and local building code, whichever is greater.
   2. Place shingles in straight coursing pattern with 5-inch weather exposure to produce double thickness over full roof area, and provide double course of shingles at eaves.
   3. Project first course of shingles 3/4 inch beyond fascia boards.
   4. Extend shingles 1/2 inch beyond face of gable edge fascia boards.

5. Complete installation to provide weathertight service.

3.04 PROTECTION

A. Do not permit traffic over finished roof surface; protect roofing until completion of project.

B. Touch-up, repair, or replace damaged asphalt shingles or accessories before Date of Substantial Completion.

END OF SECTION

SECTION 07 4113
METAL ROOF PANELS

PART 1 GENERAL

1.01 SECTION INCLUDES

A. Metal roof panel system of preformed steel panels.

1.02 RELATED REQUIREMENTS

A. Section 06 1000 - Rough Carpentry: Roof sheathing.

B. Section 07 9200 - Joint Sealants: Sealing joints between metal roof panel system and adjacent construction.

1.03 REFERENCE STANDARDS

A. AAMA 2605 - Voluntary Specification, Performance Requirements and Test Procedures for Superior Performing Organic Coatings on Aluminum Extrusions and Panels (with Coil Coating Appendix); 2022.

B. ASCE 7 - Minimum Design Loads and Associated Criteria for Buildings and Other Structures; Most Recent Edition Cited by Referring Code or Reference Standard.

C. ASTM A463/A463M - Standard Specification for Steel Sheet, Aluminum-Coated, by the Hot-Dip Process; 2022.

D. ASTM A792/A792M - Standard Specification for Steel Sheet, 55% Aluminum-Zinc Alloy-Coated by the Hot-Dip Process; 2022.

E. ASTM E96/E96M - Standard Test Methods for Gravimetric Determination of Water Vapor Transmission Rate of Materials; 2023.

F. ASTM E108 - Standard Test Methods for Fire Tests of Roof Coverings; 2020a.

G. ASTM E1592 - Standard Test Method for Structural Performance of Sheet Metal Roof and Siding Systems by Uniform Static Air Pressure Difference; 2005 (Reapproved 2017).

H. ASTM E1646 - Standard Test Method for Water Penetration of Exterior Metal Roof Panel Systems by Uniform Static Air Pressure Difference; 1995 (Reapproved 2018).

I. ICC-ES AC188 - Acceptance Criteria for Roof Underlayments; 2023.

J. UL 580 - Standard for Tests for Uplift Resistance of Roof Assemblies; Current Edition, Including All Revisions.

1.04 SUBMITTALS

A. See Section 01 3000 - Administrative Requirements for submittal procedures.

B. Product Data: Manufacturer's data sheets on each product to be used, including:
   1. Storage and handling requirements and recommendations.
   2. Installation methods.
   3. Specimen warranty.

C. Shop Drawings: Include layouts of roof panels, details of edge and penetration conditions, spacing and type of connections, flashings, underlayments, and special conditions.
   1. Show work to be field-fabricated or field-assembled.

D. Selection Samples: For each roofing system specified, submit color chips representing manufacturer's full range of available colors and patterns.

E. Verification Samples: For each roofing system specified, submit samples of minimum size 12 inches square, representing actual roofing metal, thickness, profile, color, and texture.
   1. Include typical panel joint in sample.
   2. Include typical fastening detail.

F. Test Reports: Indicate compliance of metal roofing system to specified requirements.

G. Warranty: Submit specified manufacturer's warranty and ensure that forms have been completed in Owner's name and are registered with manufacturer.

1.05 QUALITY ASSURANCE

A. Manufacturer Qualifications: Company specializing in manufacturing products specified in this section and with at least three years of documented experience.

B. Installer Qualifications: Company specializing in performing work of the type specified and with at least three years of documented experience.

1.06 DELIVERY, STORAGE, AND HANDLING

A. See Section 01 7419 - Construction Waste Management and Disposal for packaging waste requirements.

B. Provide strippable plastic protection on prefinished roofing panels for removal after installation.

1.07 FIELD CONDITIONS

A. Do not install metal roof panels, eave protection membrane, underlayment, or _____ when surface, ambient air, or wind chill temperatures are below 45 degrees F.

1.08 WARRANTY

A. See Section 01 7800 - Closeout Submittals for additional warranty requirements.

B. Finish Warranty: Provide manufacturer's special warranty covering failure of factory-applied exterior finish on metal roof panels and agreeing to repair or replace panels that show evidence of finish degradation, including significant fading, chalking, cracking, or peeling within specified warranty period of 25 years from Date of Substantial Completion.

C. Waterproofing Warranty: Provide manufacturer's warranty for weathertightness of roofing system, including agreement to repair or replace roofing that fails to keep out water within specified warranty period of 5 years from Date of Substantial Completion.

PART 2 PRODUCTS

2.01 MANUFACTURERS AND PRODUCTS

A. Basis of Design: Mechanical field seamed standing seam panels.
   1. Taylor Metal Products; PBR, 24 Gauge: www.taylormetal.com
      a. Color: Glacier White, SRI-85

B. Substitutions: See Section 01 6000 - Product Requirements.

2.02 PERFORMANCE REQUIREMENTS

A. Metal Roof Panels: Provide complete roofing assemblies, including roof panels, clips, fasteners, connectors, and miscellaneous accessories, tested for compliance with the following minimum standards:
   1. Structural Design Criteria: Provide panel assemblies designed to safely support design loads at support spacing indicated, with deflection not to exceed L/180 of span length(L) when tested in accordance with ASTM E1592.
   2. Overall: Complete weathertight system tested and approved in accordance with ASTM E1592.
   3. Thermal Movement: Design system to accommodate without deformation anticipated thermal movement over ambient temperature range of 100 degrees F.

2.03 METAL ROOF PANELS

A. Metal Roof Panels: Provide complete engineered system complying with specified requirements and capable of remaining weathertight while withstanding anticipated movement of substrate and thermally induced movement of roofing system.

B. Metal Panels: Factory-formed panels with factory-applied finish.
   1. Steel Panels:

a. Aluminum-zinc alloy-coated steel complying with ASTM A792/A792M; minimum AZ50 coating.
b. Steel Thickness: Minimum 24 gauge, 0.024 inch.
2. Texture: Smooth.
3. Length: Maximum possible length to minimize lapped joints. Where lapped joints are unavoidable, space laps so that each sheet spans over three or more supports.
4. Mill-Finish Steel Panels: Treat with passivating chemical prior to shipment, to inhibit formation of corrosion.

2.04 ATTACHMENT SYSTEM

A. Exposed System: Provide manufacturer's recommended hot-dipped galvanized steel fasteners engineered to meet performance requirements and equipped with appropriate sealant separators to provide weathertight connections that will accommodate anticipated thermal movement.

2.05 FABRICATION

A. Panels: Provide factory or field fabricated panels with applied finish and accessory items, using manufacturer's standard processes as required to achieve specified appearance and performance requirements.

2.06 FINISHES

A. Fluoropolymer Coil Coating System: Polyvinylidene fluoride (PVDF) multi-coat superior performing organic coatings system complying with AAMA 2605, including at least 70 percent PVDF resin, and at least 80 percent of coil coated metal surfaces having minimum total dry film thickness (DFT) of 0.9 mil, 0.0009 inch; color and gloss as selected by Architect from manufacturer's standard line.

2.07 ACCESSORIES

A. Miscellaneous Sheet Metal Items: Provide flashings, gutters, downspouts, trim, moldings, closure strips, preformed crickets, caps, and equipment curbs of the same material, thickness, and finish as used for the roofing panels. Items completely concealed after installation may optionally be made of stainless steel.
1. Downspouts: Open face, rectangular profile.

B. Rib and Ridge Closures: Provide prefabricated, close-fitting components of steel with corrosion resistant finish or combination steel and closed-cell foam.

C. Sealants:
1. Exposed Sealant: Elastomeric; silicone, polyurethane, or silyl-terminated polyether/polyurethane.
2. Concealed Sealant: Non-curing butyl sealant or tape sealant.

D. Underlayment: Self-adhering polymer modified sheet; 20 mil total thickness; with strippable siliconized release film on bottom side and slip resistant and UV-stable facing on top side.
1. Water Vapor Permeance: 30 perm, maximum, when tested in accordance with ASTM E96/E96M, Desiccant Method A.

PART 3 EXECUTION

3.01 EXAMINATION

A. Do not begin installation of preformed metal roof panels until substrates have been properly prepared.

B. If substrate preparation is the responsibility of another installer, notify Architect of unsatisfactory preparation before proceeding.

3.02 PREPARATION

A. Coordinate roofing work with provisions for roof drainage, flashing, trim, penetrations, and other adjoining work to ensure that completed roof will be free of leaks.

B. Coordinate installation of waterproof membrane over roof sheathing with Section 06 1000.

C. Remove protective film from surface of roof panels immediately prior to installation; strip film carefully to avoid damage to prefinished surfaces.

D. Separate dissimilar metals by applying a bituminous coating, self-adhering rubberized asphalt sheet, or other permanent method approved by metal roof panel manufacturer.

E. Protect surrounding areas and adjacent surfaces from damage during execution of this work.

F. At locations where metal will be in contact with wood or other absorbent material subject to wetting, seal joints with sealing compound and apply one coat of heavy-bodied bituminous paint.

3.03 INSTALLATION

A. Overall: Install roofing system in accordance with approved shop drawings and metal roof panel manufacturer's instructions and recommendations, as applicable to specific project conditions; securely anchor components of roofing system in place allowing for thermal and structural movement.
   1. Install roofing system with exposed fasteners prefinished to match panels.
   2. Minimize field cutting of panels. Where field cutting is required, use methods that will not distort panel profiles. Use of torches for field cutting is prohibited.

B. Accessories: Install necessary components that are required for complete roofing assembly, including flashings, gutters, downspouts, trim, moldings, closure strips, preformed crickets, caps, equipment curbs, rib closures, ridge closures, and similar roof accessory items.

C. Roof Panels: Install metal roof panels in accordance with manufacturer's installation instructions, minimizing transverse joints except at junction with penetrations.
   1. Install sealant or sealant tape at end laps and side joints as recommended by metal roof panel manufacturer.

3.04 CLEANING

A. See Section 01 7000 - Execution and Closeout Requirements for additional requirements.

B. Clean exposed sheet metal work at completion of installation. Remove grease and oil films, excess joint sealer, handling marks, and debris from installation, leaving the work clean and unmarked, free from dents, creases, waves, scratch marks, or other damage to the finish.

3.05 PROTECTION

A. Do not permit storage of materials or roof traffic on installed roof panels. Provide temporary walkways or planks as necessary to avoid damage to completed work. Protect roofing until completion of project.

B. Touch-up, repair, or replace damaged roof panels or accessories before Date of Substantial Completion.

END OF SECTION

SECTION 07 4646
FIBER CEMENT SIDING

PART 1 GENERAL

1.01 SECTION INCLUDES

A. Fiber cement panel siding

B. Fiber cement soffit panels

C. Fiber cement trim boards

1.02 RELATED REQUIREMENTS

A. Section 06 1000 - Rough Carpentry: Siding substrate.

B. Section 07 2500 - Weather Barriers: Water-resistive barrier under siding.

C. Section 07 6200 - Sheet Metal Flashing

D. Section 07 9200 - Joint Sealants: Sealing joints between siding and adjacent construction and fixtures.

E. Section 09 9113 - Exterior Painting: Field painting.

1.03 REFERENCE STANDARDS

A. ASTM B221 - Standard Specification for Aluminum and Aluminum-Alloy Extruded Bars, Rods, Wire, Profiles, and Tubes; 2021.

B. ASTM C1186 - Standard Specification for Flat Fiber-Cement Sheets; 2022.

C. ASTM E84 - Standard Test Method for Surface Burning Characteristics of Building Materials; 2023b.

D. NFPA 285 - Standard Fire Test Method for Evaluation of Fire Propagation Characteristics of Exterior Wall Assemblies Containing Combustible Components; 2023.

1.04 SUBMITTALS

A. See Section 01 3000 - Administrative Requirements for submittal procedures.

B. Product Data: Submit manufacturer's data sheets on each product to be used, including:
   1. Manufacturer's requirements for related materials to be installed by others.
   2. Preparation instructions and recommendations.
   3. Storage and handling requirements and recommendations.
   4. Installation methods, including nail patterns.

C. Shop Drawings: Indicate dimensions, layout, joints, construction details, support clips, trim boards, and methods of anchorage.

D. Manufacturer's qualification statement.

E. Installer's qualification statement.

F. Maintenance Instructions: Periodic inspection recommendations and maintenance procedures.

G. Warranty: Submit copy of manufacturer’s warranty, made out in Owner’s name, showing that it has been registered with manufacturer.

1.05 QUALITY ASSURANCE

A. Manufacturer Qualifications: Company specializing in manufacturing products specified in this section, with not less than five years of documented experience.

B. Installer Qualifications: Company specializing in performing work of type specified in this section with not less than three years of experience.

1.06 DELIVERY, STORAGE, AND HANDLING

A. See Section 01 7419 - Construction Waste Management and Disposal for packaging waste requirements.

B. Deliver and store materials in manufacturer's unopened packaging, with labels intact, until ready for installation.

C. Store materials under dry and waterproof cover, well ventilated, and elevated above grade on a flat surface.

D. Protect materials from harmful environmental elements, construction dust, and other potentially detrimental conditions.

1.07 FIELD CONDITIONS

A. Do not install panels when air temperature or relative humidity are outside manufacturer's limits.

1.08 WARRANTY

A. See Section 01 7800 - Closeout Submittals for additional warranty requirements.

B. Extended Correction Period: Correct defective work within 2-year period commencing on Date of Substantial Completion.

C. Manufacturer Warranty: Provide manufacturer warranty for years as indicated under Fiber-Cement Siding article sub-headings for "Warranty". Complete forms in Owner's name and register with manufacturer.

PART 2 PRODUCTS

2.01 FIBER-CEMENT SIDING

A. Panel Siding: Vertically oriented panels made of cement and cellulose fiber formed under high pressure with integral surface texture, complying with ASTM C1186 Type A Grade II; with machined edges, for nail attachment.
   1. Texture: Smooth.
   2. Length (Height): 96 inches, nominal.
   3. Width: 48 inches.
   4. Thickness: 5/16 inch 5/16 inch, nominal.
   5. Finish: Factory applied primer.
   6. Warranty: 30 year limited; transferable.
   7. Products:
      a. James Hardie Building Products, Inc; Hardie Panel Siding: www.jameshardie.com.
      b. Substitutions: See Section 01 6000 - Product Requirements.

B. Soffit Panels: Panels made of cement and cellulose fiber formed under high pressure with integral surface texture, complying with ASTM C1186, Type A, Grade II; with machined edges, for nail attachment.
   1. Texture: Smooth.
   2. Length: 96 inches, nominal.
   3. Width: 48 inches.
   4. Thickness: 1/4 or 5/16 inch, nominal.
   5. Finish: Factory applied primer.
   6. Manufacturer: Same as siding.

2.02 ACCESSORIES

A. Support for Cladding and Continuous Insulation: Thermal clips.
   1. Thermally-broken clips that provide attachment support for girts, angles, channels, and other cladding support framing.
   2. Fasteners: As recommended by clip manufacturer.

B. Furring Strips, Metal: Galvanized metal channels.
   1. Size: As indicated on drawings.

C. Trim Boards: Same material and texture as siding. Size as indicated on Drawings

D. Metal Trim: Extruded aluminum alloy 6063-T5 temper.
   1. Finish: Primed for paint.

a.
b. James Hardie; www.jameshardie.com
c. Fry Reglet; www.fryreglet.com
d. Substitutions: See Section 01 6000-Product Requirements.

2. Vertical Profile Trim:
   a. Type: As selected by Architect from manufacturer's standard lineor as indicated on drawings.
3. Horizontal Profile Trim:
   a. Type: As selected by Architect from manufacturer's standard lineor as indicated on drawings.
4. Termination Profile Trim:
   a. Type: J molding or as indicated on drawings.
5. Outside Corner Trim:
   a. Type: As selected by Architect from manufacturer's standard line or as indicated on drawings.
6. Inside Corner Trim:
   a. Type: As selected by Architect from manufacturer's standard lineor as indicated on drawings.

E. Fasteners: Galvanized or corrosion resistant; length as required to penetrate, 1-1/4 inches, minimum.

F. Flashings: Use manufacturer's full line of flashing accessories.

G. Exterior Soffit Vents: One piece, perforated, ASTM A653/A653M galvanized steel with G90 coating, with edge suitable for direct application to gypsum board and manufactured especially for soffit application, and provide continuous vent.

H. Sealant: Elastomeric, polyurethane or silyl-terminated polyether/polyurethane, and capable of being painted.

PART 3 EXECUTION

3.01 EXAMINATION

A. Examine substrate, clean and repair as required to eliminate conditions that would be detrimental to proper installation.

B. Verify that water-resistant barrier has been installed over substrate completely and correctly; see Section 05 4000.

C. Do not begin until unacceptable conditions have been corrected.

D. If substrate preparation is responsibility of another installer, notify Architect of unsatisfactory preparation before proceeding.

3.02 PREPARATION

A. Protect surrounding areas and adjacent surfaces during execution of this work.

B. Install Sheet Metal Flashing:
   1. Above door and window trim and casings.
   2. Above horizontal trim in field of siding.
   3. As indicated on drawings.

3.03 INSTALLATION

A. Install siding in accordance with manufacturer's instructions and recommendations.
   1. Read warranty and comply with terms necessary to maintain warranty coverage.
   2. Install in accordance with conditions stated in model code evaluation report applicable to location of project.
   3. Use trim details as indicated on drawings.
   4. Touch up field cut edges before installing.

5. Pre-drill nail holes if necessary to prevent breakage.
6. Fasteners to be flush and snug against siding.

B. Over Wood and Wood-Composite Sheathing: Fasten siding through sheathing into studs.

C. Over Masonry or Concrete Walls: Install furring strips of adequate thickness to accept full length of nails and spaced at 16 inches on center; leave space at top and bottom open; top may be behind soffit; at bottom install insect screen over opening by wrapping a strip of screen over bottom ends of vertical furring strips.

D. Over Steel Studs: Use hot-dipped galvanized self-tapping screws, with the points of at least three screws penetrating each stud the panel crosses and at panel ends.

E. Allow space for thermal movement between both ends of siding panels that butt against trim; seal joint between panel and trim with specified sealant.

F. Joints in Horizontal Siding: Avoid joints in lap siding except at corners; where joints are inevitable stagger joints between successive courses.

G. Joints in Vertical Siding: Install Z-flashing in horizontal joints between successive courses of vertical siding.

H. Do not install siding less than 8 inches from ground surface, or closer than 2 inch to roofs, patios, porches, and other surfaces where water may collect.

I. Exterior Soffit Vents: Install in accordance with manufacturer's written instructions and at locations indicated on drawings; provide vent area as indicated on drawings.

J. After installation, seal joints except lap joints of lap siding; seal around penetrations, and paint exposed cut edges.

K. Fill holes or damage not larger than 1/4" in diameter with manufacturer approved filler and sand before painting.

L. Finish Painting: See Section 09 9113.

3.04 CLEANING

A. See Section 01 7000 - Execution and Closeout Requirements for additional requirements.

B. Clean faced panels in accordance with manufacturer’s maintenance instructions, using cleaning materials and methods acceptable to manufacturer.

3.05 PROTECTION

A. Protect installed products until Date of Substantial Completion.

B. Touch-up, repair or replace damaged products before Date of Substantial Completion.

END OF SECTION

SECTION 07 5400
THERMOPLASTIC MEMBRANE ROOFING

PART 1 GENERAL

1.01 SECTION INCLUDES

A. Mechanically attached system with thermoplastic roofing membrane.

B. Adhered system with thermoplastic roofing membrane.

C. Insulation, flat and tapered.

D. Vapor retarder.

E. Cover boards.

F. Flashings.

G. Roofing cant strips, stack boots, roofing expansion joints, and walkway pads.

1.02 RELATED REQUIREMENTS

A. Section : Wood cant strips and roof sheathing.

B. Section 07 6200 - Sheet Metal Flashing and Trim: Counterflashings.

C. Section 07 9513 - Expansion Joint Cover Assemblies.

1.03 REFERENCE STANDARDS

A. ASTM C578 - Standard Specification for Rigid, Cellular Polystyrene Thermal Insulation; 2022.

B. ASTM C1177/C1177M - Standard Specification for Glass Mat Gypsum Substrate for Use as Sheathing; 2017.

C. ASTM C1289 - Standard Specification for Faced Rigid Cellular Polyisocyanurate Thermal Insulation Board; 2023.

D. ASTM D6878/D6878M - Standard Specification for Thermoplastic Polyolefin-Based Sheet Roofing; 2021.

E. ASTM E96/E96M - Standard Test Methods for Gravimetric Determination of Water Vapor Transmission Rate of Materials; 2023.

F. FM (AG) - FM Approval Guide; Current Edition.

G. FM DS 1-28 - Wind Design; 2015, with Editorial Revision (2022).

H. NRCA (RM) - The NRCA Roofing Manual; 2023.

I. NRCA (WM) - The NRCA Waterproofing Manual; 2021.

J. UL (FRD) - Fire Resistance Directory; Current Edition.

1.04 ADMINISTRATIVE REQUIREMENTS

A. Preinstallation Meeting: Convene one week before starting work of this section.
   1. Review preparation and installation procedures and coordinating and scheduling required with related work.

1.05 SUBMITTALS

A. See Section 01 3000 - Administrative Requirements for submittal procedures.

B. Product Data: Provide data indicating membrane materials, flashing materials, insulation, vapor retarder, surfacing, and fasteners.

C. Shop Drawings: Submit drawings that indicate joint or termination detail conditions, conditions of interface with other materials, setting plan for tapered insulation, and mechanical fastener layout.

D. Samples for Verification: Submit two samples 12 by 12 inches in size illustrating colored coating.

E. Manufacturer's Installation Instructions: Indicate membrane seaming precautions and perimeter conditions requiring special attention.

F. Manufacturer's Field Reports: Indicate procedures followed, ambient temperatures, humidity, wind velocity during application, and supplementary instructions given.

G. Installer's qualification statement.

H. Specimen Warranty: For approval.

I. Warranty Documentation:
   1. Submit manufacturer warranty and ensure that forms have been completed in Owner's name and registered with manufacturer.
   2. Submit installer's written verification that installation complies with warranty conditions for waterproof membrane.

1.06 QUALITY ASSURANCE

A. Manufacturer Qualifications: Company specializing in manufacturing products specified in this section with minimum ten years of experience.

B. Installer Qualifications: Company specializing in performing work of this section with at least three years of documented experience.

1.07 DELIVERY, STORAGE, AND HANDLING

A. See Section 01 7419 - Construction Waste Management and Disposal for packaging waste requirements.

B. Deliver materials in manufacturer's original containers, dry and undamaged, with seals and labels intact, unless otherwise indicated.

C. Store materials in weather protected environment, clear of ground and moisture.

D. Ensure storage and staging of materials does not exceed static and dynamic load-bearing capacities of roof decking.

E. Protect foam insulation from direct exposure to sunlight.

1.08 FIELD CONDITIONS

A. Do not apply roofing membrane during unsuitable weather.

B. Do not apply roofing membrane when ambient temperature is below 40 degrees F or above manufacturer's recommendation.

C. Do not apply roofing membrane to damp or frozen deck surface or when precipitation is expected or occurring.

D. Do not expose materials vulnerable to water or sun damage in quantities greater than can be weatherproofed the same day.

E. Schedule applications so that no partially completed sections of roof are left exposed at end of workday.

1.09 WARRANTY

A. See Section 01 7800 - Closeout Submittals for additional warranty requirements.

B. System Warranty: Provide manufacturer's system warranty agreeing to repair or replace roofing that leaks or is damaged due to wind or other natural causes.
   1. Warranty Term: 20 years.
   2. For repair and replacement include costs of both material and labor in warranty.
   3. Include accidental punctures according to the manufacturer's standard warranty terms.
   4. Exceptions are not Permitted:
      a. Damage due to wind speed greater than 56 miles per hour but less than 90 miles per hour.
   5. Include related sheet metal flashing.
   6. Provide annual inspections by manufacturer's trained employees and all routine maintenance required to prevent voidance of the warranty.

PART 2 PRODUCTS

2.01 MANUFACTURERS

A. Thermoplastic Polyolefin (TPO) Membrane Roofing Materials:
   1. Carlisle Roofing Systems, Inc; Sure-Weld TPO: www.carlisle-syntec.com/#sle.
   2. Substitutions: See Section 01 6000 - Product Requirements.

B. Insulation:

2.02 MEMBRANE ROOFING AND ASSOCIATED MATERIALS

A. Membrane Roofing Materials:
   1. TPO: Thermoplastic polyolefin (TPO) complying with ASTM D6878/D6878M, sheet contains reinforcing fabrics or scrims.
      a. Thickness: 60 mil, 0.060 inch, minimum.
   2. Sheet Width:
      a. Adhered Application: Limit width to 120 inches, maximum, when ambient temperatures are less than 40 degrees F for extended period of time during installation.
   3. Solar Reflectance: 0.75, minimum, initial, and 0.65, minimum, 3-year, certified by Cool Roof Rating Council.
   4. Thermal Emissivity: 0.80, minimum, initial, and 0.79, minimum, 3-year, certified by Cool Roof Rating Council.
   5. Color: White.

B. Seaming Materials: As recommended by membrane manufacturer.

C. Membrane Fasteners: As recommended and approved by membrane manufacturer.

D. Vapor Retarder: Material approved by roof manufacturer complying with requirements of fire rating classification; compatible with roofing and insulation materials.
   1. Fire-retardant adhesive.
   2. Vapor Permeability: 0.03 perm inch, measured in accordance with ASTM E96/E96M.

E. Flexible Flashing Material: Same material as membrane.

F. Through-Wall Flashing: Cold-applied, self-adhering, styrene-butadiene-styrene (SBS) modified rubberized asphalt sheet membrane bonded with high density cross-woven polyethylene film.
   1. Thickness: 47 mil, 0.047 inch, minimum.
   2. Width: 12 inches, minimum.

2.03 COVER BOARDS

A. Cover Boards: Glass-mat faced gypsum panels complying with ASTM C1177/C1177M.
   1. Thickness: 1/2 inch, fire-resistant.
   2. Products:
      a. Georgia-Pacific; DensDeck Prime with EONIC Technology: www.densdeck.com/#sle.
      b. Substitutions: See Section 01 6000 - Product Requirements.

2.04 INSULATION

A. Polyisocyanurate (ISO) Board Insulation: Rigid cellular foam, complying with ASTM C1289.
   1. Classifications:
      a. Type II: Faced with either cellulosic facers or glass fiber mat facers on both major surfaces of the core foam.
         1) Class 1 - Faced with glass fiber reinforced cellulosic facers on both major surfaces of the core foam.
         2) Compressive Strength: Classes 1-2-3, Grade 1, 16 psi (110 kPa), minimum.
         3) Thermal Resistance, R-value: At 1-1/2 inches thick; Class 1, Grades 1-2-3, 8.4 (1.48), minimum, at 75 degrees F.
   2. Board Size: 48 by 96 inches.
   3. Board Thickness: 1.5 inches.

4. Tapered Board: Slope as indicated; minimum thickness 1/4 inch; fabricate of fewest layers possible.
5. Board Edges: Square.
6. Products:
   a. GAF; EnergyGuard Polyiso Insulation: www.gaf.com/#sle.
   b. Mule-Hide Products Co, Inc; Poly ISO Flat: www.mulehide.com/#sle.
   c. Substitutions: See Section 01 6000 - Product Requirements.

B. Tapered Edge Strip (Drain Sumps): ASTM C 1289, Type II, Class 2, Grade 2, closed-cell, coatedpolymer-bonded, glass-fiber mat facer on both major surfaces. Rigid polyisocyanurate board of 24-inches wide, 4-foot long tapering from 0-inch to thickness indicated on drawings. Install where ndicated on Drawings.
   1. Products:
      a. Atlas AC Foam: TES Tapered Edge Strip.
      b. Substitutions: See Section 01 6000-Product Requirements.

2.05 ACCESSORIES

A. Stack Boots: Prefabricated flexible boot and collar for pipe stacks through membrane; same material as membrane.

B. Corners and Seams: Same materials as membrane, in manufacturer's standard thicknesses.

C. Cant Strips: Wood, pressure preservative treated; see Section 06 1000.

D. Insulation Fasteners: Appropriate for purpose intended and approved by roofing manufacturer.
   1. Length as required for thickness of insulation material and penetration of deck substrate, with metal washers.

E. Membrane Adhesive: As recommended by membrane manufacturer.

F. Surface Conditioner for Adhesives: Compatible with membrane and adhesives.

G. Thinners and Cleaners: As recommended by adhesive manufacturer, compatible with membrane.

H. Insulation Adhesive: As recommended by insulation manufacturer.

PART 3 EXECUTION

3.01 EXAMINATION

A. Verify that surfaces and site conditions are ready to receive work.

B. Verify deck is supported and secure.

C. Verify deck is clean and smooth, flat, free of depressions, waves, or projections, properly sloped and suitable for installation of roof system.

D. Verify deck surfaces are dry and free of snow or ice.

E. Verify that roof openings, curbs, and penetrations through roof are solidly set, and cant strips are in place.

3.02 PREPARATION - WOOD DECK

A. Verify flatness and tightness of joints in wood decking; fill knot holes with latex filler.

B. Confirm dry deck by moisture meter with 12 percent moisture maximum.

3.03 INSTALLATION, GENERAL

A. Perform work in accordance with manufacturer's instructions, NRCA (RM), and NRCA (WM) applicable requirements.

B. Do not apply roofing membrane during cold or wet weather conditions.

C. Do not apply roofing membrane when ambient temperature is outside the temperature range recommended by manufacturer.

D. Do not apply roofing membrane to damp or frozen deck surface or when precipitation is expected or occurring.

E. Do not expose materials vulnerable to water or sun damage in quantities greater than can be weatherproofed the same day.

F. Coordinate this work with installation of associated counterflashings installed by other sections as the work of this section proceeds.

3.04 INSTALLATION - VAPOR RETARDER AND INSULATION, UNDER MEMBRANE

A. Install vapor retarder to deck surface with adhesive in accordance with manufacturer's instructions.
   1. Extend vapor retarder under cant strips and blocking to deck edge.
   2. Install flexible flashing from vapor retarder to air seal material of wall construction, lap and seal to provide continuity of the air barrier plane.

B. Ensure vapor retarder is clean and dry, continuous, and ready for application of insulation.

C. Attachment of Insulation:
   1. Mechanically fasten first layer of insulation to deck in accordance with roofing manufacturer's instructions and FM DS 1-28 Factory Mutual requirements and FM DS 1-28 Factory Mutual requirements.
   2. Embed second layer of insulation into full bed of adhesive in accordance with roofing and insulation manufacturers' instructions.

D. Cover Boards: Mechanically fasten cover boards in accordance with roofing manufacturer's instructions and FM (AG) Factory Mutual requirements.

E. Lay subsequent layers of insulation with joints staggered minimum 6 inches from joints of preceding layer.

F. Place tapered insulation to the required slope pattern in accordance with manufacturer's instructions.

G. Lay boards with edges in moderate contact without forcing. Cut insulation to fit neatly to perimeter blocking and around penetrations through roof.

H. At roof drains, use factory-tapered boards to slope down to roof drains over a distance of 18 inches.

I. Do not install more insulation than can be covered with membrane in same day.

3.05 INSTALLATION - MEMBRANE

A. Roll out membrane, free from wrinkles or tears. Place sheet into place without stretching.

B. Shingle joints on sloped substrate in direction of drainage.

C. Apply adhesive to substrate at rate directed by manufacturer. Fully embed membrane in adhesive except in areas directly over or within of expansion joints. Fully adhere one roll before proceeding to adjacent rolls.

D. Overlap edges and ends and seal seams by contact adhesive contact adhesive, minimum 3 inches 3 inches. Seal permanently waterproof. Apply uniform bead of sealant to joint edge. Apply uniform bead of sealant to joint edge.
   1. Probe seams once welds have thoroughly cooled. (Approximately 30 minutes.)
   2. Repair deficient seams within the same day.
   3. Seal cut edges of reinforced membrane after seam probe is complete.

E. At intersections with vertical surfaces:
   1. Extend membrane over cant strips and up a minimum of 4 inches onto vertical surfaces.
   2. Fully adhere flexible flashing over membrane and up to nailing strips.

F. Around roof penetrations, seal flanges and flashings with flexible flashing.

G. Coordinate installation of roof drains and sumps and related flashings.

H. Daily Seal: Install daily seal per manufacturer’s instructions at the end of each work day. Prevent infiltration of water at incomplete flashings, terminations, and at unfinished membrane edges.

3.06 FIELD QUALITY CONTROL

A. See Section 01 4000 - Quality Requirements for additional requirements.

B. Owner will provide testing services, and Contractor to provide temporary construction and materials for testing in accordance with requirements.

C. Require on-site attendance of roofing materials manufacturer's representative during installation of the work.

D. Request for warranty inspection shall be completed by the roofing applicator and be forwarded o the roofing manufacturer at least 14 days prior to the requested date of inspection. Special information regarding access to the roof shall be included on the request form.

E. The warranty shall be issued to the Owner after satisfactory final inspection by the roofing manufacturer’s representative at Substantial Completion.

3.07 CLEANING

A. See Section 01 7000 - Execution and Closeout Requirements for additional requirements.

B. See Section 01 7419 - Construction Waste Management and Disposal, for additional requirements.

C. Remove bituminous markings from finished surfaces.

D. In areas where finished surfaces are soiled by work of this section, consult manufacturer of surfaces for cleaning advice and comply with their documented instructions.

E. Repair or replace defaced or damaged finishes caused by work of this section.

3.08 PROTECTION

A. Protect installed roofing and flashings from construction operations.

B. Where traffic must continue over finished roof membrane, protect surfaces using durable materials.

END OF SECTION

SECTION 07 6200
SHEET METAL FLASHING AND TRIM

PART 1 GENERAL

1.01 SECTION INCLUDES

A. Fabricated sheet metal items, including flashings, counterflashings, gutters, downspouts, and other items indicated in Schedule.

B. Sealants for joints within sheet metal fabrications.

C. Precast concrete splash pads.

1.02 RELATED REQUIREMENTS

A. Section 07 4646 - Fiber Cement Siding

B. Section 07 5419 - PVC Thermoplastic Roofing.

C. Section 08 4313 - Aluminum-Framed Store

1.03 REFERENCE STANDARDS

A. ANSI/SPRI/FM 4435/ES-1 - Test Standard for Edge Systems Used with Low Slope Roofing Systems; 2017.

B. ASTM A666 - Standard Specification for Annealed or Cold-Worked Austenitic Stainless Steel Sheet, Strip, Plate, and Flat Bar; 2023.

C. NAAMM AMP 500-06 - Metal Finishes Manual; 2006.

D. NRCA (RM) - The NRCA Roofing Manual; 2023.

E. SMACNA (ASMM) - Architectural Sheet Metal Manual; 2012.

1.04 ACTION SUBMITTALS

A. See Section 01 3000 - Administrative Requirements for submittal procedures.

B. Product Data: For each type of product indicated. Include construction details, material descriptions, dimensions of individual components and profiles, and finishes for each manufactured product and accessory.

C. Shop Drawings: Show fabrication and installation layouts of sheet metal flashing and trim, including plans, elevations, expansion-joint locations, and keyed details. Distinguish between shop- and field-assembled work. Include the following:
   1. Identification of material, thickness, weight, and finish for each item and location in Project.
   2. Details for forming sheet metal flashing and trim, including profiles, shapes, seams, and dimensions.
   3. Details for fastening, joining, supporting, and anchoring sheet metal flashing and trim, including fasteners, clips, cleats, and attachments to adjoining work.
   4. Details of edge conditions and counter flashings as applicable.
   5. Details of connections to adjoining work.

D. Samples for Initial Selection: For each type of sheet metal flashing and trim indicated with factory-applied color finishes.

1.05 INFORMATIONAL SUBMITTALS

A. Qualification Data: For qualified fabricator.

B. Warranty: Sample of special warranty.

1.06 CLOSEOUT SUBMITTALS

A. Maintenance Data: For sheet metal flashing, trim, and accessories to include in maintenance manuals.

1.07 QUALITY ASSURANCE

A. Perform work in accordance with SMACNA (ASMM) requirements and standard details, except as otherwise indicated.

B. Fabricator and Installer Qualifications: Company specializing in sheet metal work with 5 years of documented experience.

1.08 DELIVERY, STORAGE, AND HANDLING

A. Do not store sheet metal flashing and trim materials in contact with other materials that might cause staining, denting, or other surface damage. Store sheet metal flashing and trim materials away from uncured concrete and masonry.

B. Protect strippable protective covering on sheet metal flashing and trim from exposure to sunlight and high humidity, except to the extent necessary for the period of sheet metal flashing and trim installation.

C. Deliver sheet metal flashing materials and fabrications undamaged. Protect sheet metal flashing and trim materials and fabrications during transportation and handling.

D. Unload, store, and install sheet metal flashing materials and fabrications in a manner to prevent bending, warping, twisting, and surface damage.

E. Stack materials on platforms or pallets, covered with suitable weathertight and ventilated covering. Do not store sheet metal flashing and trim materials in contact with other materials that might cause staining, denting, or other surface damage.

1.09 COORDINATION

A. Coordinate installation of sheet metal flashing and trim with interfacing and adjoining construction to provide a leak-proof, secure, and noncorrosive installation.

1.10 WARRANTY

A. Manufacturer’s Warranty:
   1. Manufacturers standard warranty for twenty (20) years, following Final Acceptance by Owner, that metal will not fail structurally, perforate, rupture, or leak due to corrosion.

B. Special Warranty on Finishes: Manufacturer's standard form in which manufacturer agrees to repair finish or replace sheet metal flashing and trim that shows evidence of deterioration of factory-applied finishes within specified warranty period.
   1. Exposed Panel Finish: Deterioration includes, but is not limited to, the following:
      a. Color fading more than 5 Hunter units when tested according to ASTM D2244.
      b. Chalking in excess of a No. 8 rating when tested according to ASTM D4214.
   2. Finish Warranty Period: Twenty (20) years from date of Substantial Completion.

C. Special Installers Warranty: Warrant that all sheet metal flashings are installed in accordance with the Contract Documents and will be free from defective quality of Work and or remain watertight and weatherproof with normal usage for a period of five (5) years following Final Acceptance.

PART 2 PRODUCTS

2.01 PERFORMANCE REQUIREMENTS

A. General: Sheet metal flashing and trim assemblies as indicated shall withstand wind loads, structural movement, thermally induced movement, and exposure to weather without failure due to defective manufacture, fabrication, installation, or other defects in construction. Completed sheet metal flashing and trim shall not rattle, leak, or loosen, and shall remain watertight.

B. ANSI/ SPRI Wind Design Standard: Manufacture, install, and secure roof edge flashings tested according to ANSI / SPRI ES-1 and capable of resisting the following design pressure:
   1. For field of roof pressures of 15-lbf/sq. ft.: 35-lbf/sq. ft. perimeter uplift force, 50-lbf/sq. ft. corner uplift force, and 30-lbf/sq. ft. outward force.
   2. Design Pressure: As indicated on Drawings.

C. Thermal Movements: Provide sheet metal flashing and trim that allow for thermal movements resulting from the following maximum change (range) in ambient and surface temperatures by preventing buckling, opening of joints, hole elongation, overstressing of components, failure of joint sealants, failure of connections, and other detrimental effects. Provide clips that resist rotation and avoid shear stress as a result of sheet metal and trim thermal movements. Base engineering calculation on surface temperatures of materials due to both solar heat gain and nighttime-sky heat loss.
   1. Temperature Change (Range): 120 deg F, ambient; 180 deg F, material surfaces.

D. Water Infiltration: Provide sheet metal flashing and trim that do not allow water infiltration to building interior.

2.02 SHEET MATERIALS

A. Zinc-Coated (Galvanized) Steel Sheet (concealed cleats and anchor clips): ASTM A 653/A 653M, G90 coating designation; structural quality; 22 gauge unless otherwise noted.

B. Pre-painted, Metallic-Coated Steel Sheet: 24-guage; restricted flatness steel sheet, metallic coated by the hot-dip process and pre-painted by the coil-coating process to comply with ASTM A 755/A 755M.
   1. High-Performance Organic Finish: Two-Coat Fluoropolymer: Fluoropolymer finish containing not less than 70 percent PVDF resin by weight in color coat. Prepare, pretreat, and apply coating to exposed metal surfaces to comply with coating and resin manufacturers' written instructions.
      a. Humidity and Salt Spray Resistance: 1000 hours.
      b. Color: One color shall be selected from manufacturer’s full range of standard colors.

C. Stainless Steel: ASTM A167, Grade 2D, Type 304, soft temper, smooth finish No 2B bright; cold rolled finish.
   1. Minimum 0.025-inch thick (24-guage).

2.03 MISCELLANEOUS MATERIALS

A. General: Provide materials and types of fasteners, solder, welding rods, protective coatings, separators, sealants, and other miscellaneous items as required for complete sheet metal flashing and trim installation.

B. Fasteners: Wood screws, flat head screws, annular threaded nails, self-tapping screws, self-locking rivets and bolts, and other suitable fasteners designed to withstand design loads.
   1. Exposed Fasteners: Galvanized steel with EPDM washers; heads matching color of sheet metal by means of plastic caps or factory-applied coating.
   2. Blind Fasteners: Galvanized, self-drilling screws, gasketed, with hex washer head.
   3. Masonry Anchors: Rawl Zamac (Hammer-Screw) with EPDM washers at masonry / concrete substrates; heads matching color of sheet metal by means of plastic caps or factory-applied coating.
   4. Pop Rivet: Westward Steel with Button head, 1/8” diameter blind rivet, in color to match color of sheet metal.

C. Stainless Steel Clamping Bands; sizes as dictated by conditions, screw type tightening system.

D. Solder for Stainless Steel: ASTM B 32, Grade Sn60, with acid flux of type recommended by stainless-steel sheet manufacturer.

E. General Purpose Sealant: ASTM C 920, elastomeric polyurethane polymer sealant; of type, grade, class, and use classifications required to seal joints in sheet metal flashing and trim and remain watertight.

F. Butyl Sealant: ASTM C 1311, single-component, solvent-release butyl rubber sealant, polyisobutylene plasticized, heavy bodied for hooked-type expansion joints with limited movement.

2.04 FABRICATION

A. General: Custom fabricate sheet metal flashing and trim to comply with recommendations in SMACNA's "Architectural Sheet Metal Manual" that apply to design, dimensions, metal, and other characteristics of item indicated. Shop-fabricate items where practicable. Obtain field measurements for accurate fit before shop-fabrication.
   1. Fabricate sheet metal flashing and trim in thickness or weight needed to comply with performance requirements, but not less than that specified for each application and metal.
   2. Fabricate sheet metal flashing and trim without excessive oil canning, buckling, and tool marks and true to line and levels indicated.
   3. Seams for Stainless Steel: Fabricate nonmoving seams in accessories with flat-lock seams. Tin edges to be seamed, form seams, and solder.
   4. Sealed Joints: Form non-expansion but movable joints in metal to accommodate elastomeric sealant to comply with SMACNA recommendations.
   5. Conceal fasteners and expansion provisions where possible on exposed-to-view sheet metal flashing and trim, unless otherwise indicated.

B. Fabricate exposed cleats from same material as accessory being anchored.

C. Fabricate concealed cleats and anchor clips from Zinc-Coated (Galvanized) Steel Sheet: ASTM A 653/A 653M, G90 coating designation; structural quality; 22 gauge.

D. Field verify dimensions prior to fabrication.

E. Form sections true to shape, accurate in size, square, and free from distortion or defects.

F. Form pieces in longest possible lengths.

G. Hem exposed edges on underside 1/2-inch; miter and seam corners.

H. Form material with profiles shown, except where otherwise indicated. At moving joints, use sealed lapped, bayonet-type or interlocking hooked seams.
   1. Standing Seams: 1-inch high with sealant at folded corners.
   2. Solder-Lap Seams: 1-inch finish width; rivet and sweat solder watertight.
   3. Double S Lock Seams: Form 1-1/4-inch with S shaped seam on each edge of flashing sheet for concealed fastening.

I. Fabricate corners of coping from one piece with minimum 18-inch-long legs; seam for rigidity, seal with sealant. Solder galvanized steel that is not prefinished. Do not solder prefinished steel.
   1. Do not use torches for soldering. Heat surfaces to receive solder and flow solder into joint. Fill joint completely. Completely remove flux and spatter from exposed surfaces.

J. Fabricate vertical faces with bottom edge formed outward 1/4-inch and hemmed to form drip.

K. Fabricate flashings to allow toe to extend 4-inches over roofing. Return and break edges.

2.05 FLASHING

2.06 ACCESSORIES

A. Sheet Metal Accessories: Provide components required for complete sheet metal roofing assembly including trim, copings, fasciae, corner units, clips, flashings, sealants, gaskets, fillers, metal closures, closure strips, and similar items. Match material and finish of sheet metal roofing unless otherwise indicated.

B. Cleats: Continuous attachment devices for mechanically seaming into joints for exterior and other faces requiring blind fastening:
   1. Minimum 22 gauge thick.

C. Flashing and Trim: Formed from same material and with same finish as sheet metal roofing, minimum 24-guage thick.

2.07 FINISHES

A. Comply with NAAMM's "Metal Finishes Manual for Architectural and Metal Products" for recommendations for applying and designating finishes.

B. Protect mechanical and painted finishes on exposed surfaces from damage by applying a strippable, temporary protective covering before shipping.

C. Appearance of Finished Work: Variations in appearance of abutting or adjacent pieces are acceptable if they are within one-half of the range of approved Samples. Noticeable variations in the same piece are not acceptable. Variations in appearance of other components are acceptable if they are within the range of approved Samples and are assembled or installed to minimize contrast.

PART 3 EXECUTION

3.01 EXAMINATION

A. Examine substrates, areas, and conditions, with Installer present, to verify actual locations, dimensions and other conditions affecting performance of work.
   1. Verify that substrate is sound, dry, smooth, clean, sloped for drainage, and securely anchored.
   2. Proceed with installation only after unsatisfactory conditions have been corrected.

3.02 PREPARATION

A. Install starter and edge strips, and cleats before starting installation.

B. Install surface mounted reglets true to lines and levels, and seal top of reglets with sealant.

C. Back paint concealed metal surfaces with protective backing paint to a minimum dry film thickness of 15 mil, 0.015 inch.

3.03 INSTALLATION, GENERAL

A. General: Anchor sheet metal flashing and trim and other components of the Work securely in place, with provisions for thermal and structural movement. Use fasteners, solder, welding rods, protective coatings, separators, sealants, and other miscellaneous items as required to complete sheet metal flashing and trim system.
   1. Torch cutting of sheet metal flashing and trim is not permitted.

B. Metal Protection: Where dissimilar metals will contact each other or corrosive substrates, protect against galvanic action by painting contact surfaces with bituminous coating or by other permanent separation as recommended by fabricator or manufacturers of dissimilar metals.
   1. Coat side of stainless-steel flashing and trim with bituminous coating where flashing and trim will contact wood, ferrous metal, or cementitious construction.

C. Install exposed sheet metal flashing and trim without excessive oil canning, buckling, and tool marks.

D. Install sheet metal flashing and trim true to line and levels indicated. Provide uniform, neat seams with minimum exposure of solder, welds, and butyl sealant.

E. Install sheet metal flashing and trim to fit substrates and to result in watertight performance. Verify shapes and dimensions of surfaces to be covered before fabricating sheet metal.

F. Expansion Provisions: Provide for thermal expansion of exposed flashing and trim. Space movement joints at a maximum of 10-feet with no joints allowed within 24-inches of corner or intersection. Where lapped or bayonet-type expansion provisions cannot be used or would not be sufficiently watertight, form expansion joints of intermeshing hooked flanges, not less than 1-inch deep, filled with butyl sealant concealed within joints.

G. Fasteners: Use fasteners of sizes that will penetrate substrate not less than 1-1/4-inches for nails and not less than 3/4-inch for wood screws.
   1. Galvanized or Pre-painted, Metallic-Coated Steel: Use fasteners as indicated in Part 2 of this specification.
   2. Stainless Steel: Use stainless-steel fasteners.

H. Seal joints with butyl sealant as required for watertight construction.

1. Where sealant-filled joints are used, embed hooked flanges of joint members not less than 1-inch into sealant. Form joints to completely conceal sealant. When ambient temperature at time of installation is moderate, between 40 and 70 deg F, set joint members for 50 percent movement either way. Adjust setting proportionately for installation at higher ambient temperatures. Do not install sealant-type joints at temperatures below 40 deg F.
2. Prepare joints and apply sealants in accordance with manufacturer’s published installation instructions.

I. Soldered Joints: Clean surfaces to be soldered, removing oils and foreign matter. Pre-tin edges of sheets to be soldered to a width of 1-1/2-inches except where pre-tinned surface would show in finished Work.
   1. Pre-tinning is not required for lead.

3.04 ROOF FLASHING INSTALLATION

A. General: Install sheet metal roof flashing and trim to comply with performance requirements, sheet metal manufacturer's written installation instructions, and SMACNA's "Architectural Sheet Metal Manual, Seventh Edition." Provide concealed fasteners where possible, set units true to line, and level as indicated. Install work with laps, joints, and seams that will be permanently watertight.

B. Roof Edge Flashing: Anchor to resist uplift and outward forces according to recommendations in cited sheet metal standard unless otherwise indicated. Interlock bottom edge of roof edge flashing with continuous cleat anchored to substrate at not less than 6-inch centers, staggered, unless otherwise indicated. Interlock exterior and interior drip edges with adjacent flashing length utilizing bayonet style connections.

C. Field measure all site conditions prior to fabrication and installation.

D. Coordinate installation of sheet metal flashings with installation of roof membrane materials.

E. Insert counter flashing into receivers or behind adjacent flashings and fit tightly to base flashing.

F. Form sections true to shape, accurate in size, square, and free from distortion or defects.

G. Secure new flashing intersections to existing flashings as required providing weathertight performance.

3.05 FIELD QUALITY CONTROL

A. See Section 01 4000 - Quality Requirements for field inspection requirements.

B. Inspection will involve surveillance of work during installation to ascertain compliance with specified requirements.

3.06 CLEANING AND PROTECTION

A. Clean and neutralize flux materials. Clean off excess solder and sealants.

B. Remove temporary protective coverings and strippable films as sheet metal flashing and trim are installed. On completion of installation, clean finished surfaces, including removing unused fasteners, metal filings, pop rivet stems, and pieces of flashing. Maintain in a clean condition during construction.

C. Replace sheet metal flashing and trim that have been damaged or that have deteriorated beyond successful repair by finish touchup or similar minor repair procedures.

3.07 SCHEDULE

A. Counter Flashing: Fabricate with profiles as shown on the Drawings.
   1. Joint Style: Lapped and sealed.
   2. Sheet Metal: Pre-painted, metallic-coated sheet, 24-guage.
   3. Color: Selected by Owner from manufacturer’s standard color selection.

B. Coping: Fabricate with profiles as shown on the Drawings.
   1. Joint Style: Standing Seam unless otherwise noted.
   2. Sheet Metal: Pre-painted, metallic-coated sheet, 24-guage.

3. Color: Selected by Owner from manufacturer's standard color selection.

C. Storm Collars: Fabricate with profiles as shown on the Drawings.
1. Joint Style: Interlocking, seamed, and soldered. Pop-rivet for extra strength.
2. Stainless Steel: 0.025-inch thick.
3. Manufacturer: SBC Industries.
a. Model: UMB for pipe and conduit penetrations.
b. Model: UMB-BELL for structural supports at ladder.

D. Drip Flashing: Fabricate with profiles as shown on the Drawings.
1. Joint Style: Lapped and sealed.
2. Sheet Metal: Pre-painted, metallic-coated sheet, 24-gauge.
3. Color: Selected by Owner from manufacturer's standard color selection.

E. Closure Flashing: Fabricate with profiles as shown on the Drawings.
1. Joint Style: Lapped and sealed.
2. Sheet Metal: Pre-painted, metallic-coated sheet, 22-gauge.
3. Color: Selected by Owner from manufacturer's standard color selection.

F. Gutters: Fabricate gutters with profiles shown on the Drawings, continuously roll formed without seams. Provide nested lap type expansion joints in accordance with SMACNA (ASMM), Figure 1-6, every 50 feet maximum of gutter length. Provide end caps of matching material and finish at gutter segment termination points; crimp, rivet and seal watertight. Provide outlet tubes with friction fit stainless steel debris screens.
1. Pre-finished galvanized Steel: 24 gauge, 0.028 inch thick.
2. Pre-Finish both sides, with Kynar 500 on the outside of the gutter.

G. Downspouts: Fabricate complete with mitered elbows.
1. Pre-Finished Galvanized Steel: 24 gauge, 0.028 inch thick.
2. Connect to existing boot.

H. Cap Receiver: Fabricate with profiles as shown on the Drawings.
1. 24 Gauge stainless-steel.
2. Joint Style: Lapped with interlocking hems.

I. Saddle Flashing: Fabricate with profiles as shown on the Drawings.
1. 24 Gauge stainless-steel.
2. Joint Style: Lapped, riveted, and soldered.

J. Scuppers:
1. 24 Gauge stainless-steel.
2. Joint Style: Lapped, riveted, and soldered.

K. Miscellaneous Flashing: Fabricate with profiles as shown on the Drawings and from sheet metal materials indicated.

END OF SECTION

This page intentionally left blank

SECTION 07 8400
FIRESTOPPING

PART 1 GENERAL

1.01 SECTION INCLUDES

A. Firestopping systems.

B. Firestopping of joints and penetrations in fire-resistance-rated and smoke-resistant assemblies, whether indicated on drawings or not, and other openings indicated.

1.02 RELATED REQUIREMENTS

A. Section 01 6116 - Volatile Organic Compound (VOC) Content Restrictions.

B. Section 01 7000 - Execution and Closeout Requirements: Cutting and patching.

C. Section 09 2116 - Gypsum Board Assemblies: Gypsum wallboard fireproofing.

1.03 REFERENCE STANDARDS

A. ASTM E119 - Standard Test Methods for Fire Tests of Building Construction and Materials; 2022.

B. ASTM E814 - Standard Test Method for Fire Tests of Penetration Firestop Systems; 2023a.

C. ASTM E1966 - Standard Test Method for Fire-Resistive Joint Systems; 2015 (Reapproved 2019).

D. ASTM E2174 - Standard Practice for On-Site Inspection of Installed Firestop Systems; 2020a.

E. ASTM E2393 - Standard Practice for On-Site Inspection of Installed Fire Resistive Joint Systems and Perimeter Fire Barriers; 2020a.

F. ASTM E2837 - Standard Test Method for Determining the Fire Resistance of Continuity Head-of-Wall Joint Systems Installed Between Rated Wall Assemblies and Nonrated Horizontal Assemblies; 2023.

G. ITS (DIR) - Directory of Listed Products; Current Edition.

H. FM (AG) - FM Approval Guide; Current Edition.

I. SCAQMD 1168 - Adhesive and Sealant Applications; 1989, with Amendment (2022).

J. UL 1479 - Standard for Fire Tests of Penetration Firestops; Current Edition, Including All Revisions.

K. UL 2079 - Standard for Tests for Fire Resistance of Building Joint Systems; Current Edition, Including All Revisions.

L. UL (DIR) - Online Certifications Directory; Current Edition.

M. UL (FRD) - Fire Resistance Directory; Current Edition.

1.04 SUBMITTALS

A. See Section 01 3000 - Administrative Requirements for submittal procedures.

B. Schedule of Firestopping: List each type of penetration, fire rating of the penetrated assembly, and firestopping test or design number.

C. Product Data: Provide data on product characteristics, performance ratings, and limitations.

D. Sustainable Design Submittal: Submit VOC content documentation for nonpreformed materials.

E. Manufacturer's Certificate: Certify that products meet or exceed specified requirements.

1.05 QUALITY ASSURANCE

A. Fire Testing: Provide firestopping assemblies of designs that provide the scheduled fire ratings when tested in accordance with methods indicated.

1. Listing in UL (FRD), FM (AG), or ITS (DIR) will be considered as constituting an acceptable test report.

2. Valid evaluation report published by ICC Evaluation Service, Inc. (ICC-ES) at www.icc-es.org will be considered as constituting an acceptable test report.
3. Submission of actual test reports is required for assemblies for which none of the above substantiation exists.

B. Manufacturer Qualifications: Company specializing in manufacturing the products specified in this section with minimum three years documented experience.

1.06 FIELD CONDITIONS

A. Comply with firestopping manufacturer's recommendations for temperature and conditions during and after installation; maintain minimum temperature before, during, and for three days after installation of materials.

B. Provide ventilation in areas where solvent-cured materials are being installed.

PART 2 PRODUCTS

2.01 MANUFACTURERS

A. Firestopping Manufacturers:
1. 3M Fire Protection Products: www.3m.com/firestop/#sle.
2. Hilti, Inc: www.us.hilti.com/#sle.
3. Nelson FireStop Products: www.nelsonfirestop.com/#sle.
4. Specified Technologies Inc: www.stifirestop.com/#sle.
5. Tremco Commercial Sealants & Waterproofing: www.tremcosealants.com/#sle.
6. Substitutions: See Section 01 6000 - Product Requirements.

2.02 MATERIALS

A. Firestopping Materials: Any materials meeting requirements.

B. Volatile Organic Compound (VOC) Content: Provide products having VOC content lower than that required by SCAQMD 1168.

C. Mold and Mildew Resistance: Provide firestopping materials with mold and mildew resistance rating of zero(0) in accordance with ASTM G21.

D. Primers, Sleeves, Forms, Insulation, Packing, Stuffing, and Accessories: Provide type of materials as required for tested firestopping assembly.

E. Fire Ratings: Refer to drawings for required systems and ratings.

2.03 FIRESTOPPING ASSEMBLY REQUIREMENTS

A. Head-of-Wall (HW) Joint System Firestopping at Joints Between Fire-Rated Wall Assemblies and Non-Rated Horizontal Assemblies: Use system that has been tested according to ASTM E2837 to have fire resistance F Rating equal to required fire rating of wall assembly.
1. Movement: Provide systems that have been tested to show movement capability as indicated.

B. Floor-to-Floor (FF), Floor-to-Wall (FW), Head-of-Wall (HW), and Wall-to-Wall (WW) Joints, Except Perimeter, Where Both Are Fire-Rated: Use system that has been tested according to ASTM E1966 or UL 2079 to have fire resistance F Rating equal to required fire rating of the assembly in which the joint occurs.
1. Movement: Provide systems that have been tested to show movement capability as indicated.
2. Listing by FM (AG), ITS (DIR), UL (DIR), or UL (FRD) in their certification directories will be considered evidence of successful testing.

C. Through Penetration Firestopping: Use system that has been tested according to ASTM E814 to have fire resistance F Rating equal to required fire rating of penetrated assembly.
1. Listing by FM (AG), ITS (DIR), UL (DIR), or UL (FRD) in their certification directories will be considered evidence of successful testing.

2.04 FIRESTOPPING SYSTEMS

A. Firestopping: Any material meeting requirements.
   1. Fire Ratings: Use system that is listed by FM (AG), ITS (DIR), or UL (FRD) and tested in accordance with ASTM E814, ASTM E119, or UL 1479 with F Rating equal to fire rating of penetrated assembly and minimum T Rating Equal to F Rating and in compliance with other specified requirements.
   2. Fire Ratings: See drawings for required systems and ratings.

PART 3 EXECUTION

3.01 EXAMINATION

A. Verify openings are ready to receive the work of this section.

3.02 PREPARATION

A. Clean substrate surfaces of dirt, dust, grease, oil, loose material, or other materials that could adversely affect bond of firestopping material.

B. Remove incompatible materials that could adversely affect bond.

C. Install backing materials to prevent liquid material from leakage.

3.03 INSTALLATION

A. Install materials in manner described in fire test report and in accordance with manufacturer's instructions, completely closing openings.

B. Do not cover installed firestopping until inspected by Owner's Independent Testing Agency.

C. Do not cover installed firestopping until inspected by authorities having jurisdiction.

D. Install labeling required by code.

3.04 FIELD QUALITY CONTROL

A. Repair or replace penetration firestopping and joints at locations where inspection results indicate firestopping or joints do not meet specified requirements.

3.05 CLEANING

A. Clean adjacent surfaces of firestopping materials.

3.06 PROTECTION

A. Protect adjacent surfaces from damage by material installation.

END OF SECTION

This page intentionally left blank

SECTION 07 9200
JOINT SEALANTS

PART 1 GENERAL

1.01 SECTION INCLUDES

A. Nonsag gunnable joint sealants.

B. Self-leveling pourable joint sealants.

C. Joint backings and accessories.

D. Section 01 6116 - Volatile Organic Compound (VOC) Content Restrictions: Additional requirements for sealants and primers.

E. Section 09 2116 - Gypsum Board Assemblies: Sealing acoustical and sound-rated walls and ceilings.

1.02 SUBMITTALS

A. See Section 01 3000 - Administrative Requirements for submittal procedures.

B. Product Data: Submit manufacturer's technical datasheets for each product to be used; include the following:
   1. Physical characteristics, including movement capability, VOC content, hardness, cure time, and color availability.
   2. List of backing materials approved for use with the specific product.
   3. Substrates that product is known to satisfactorily adhere to and with which it is compatible.
   4. Substrates the product should not be used on.

C. Color Cards for Selection: Where sealant color is not specified, submit manufacturer's color cards showing standard colors available for selection.

D. Executed warranty.

1.03 QUALITY ASSURANCE

A. Installer Qualifications: Company specializing in performing the work of this section and with at least three years of documented experience.

1.04 WARRANTY

A. See Section 01 7800 - Closeout Submittals for additional warranty requirements.

B. Manufacturer Warranty: Provide 2-year manufacturer warranty for installed sealants and accessories that fail to achieve a watertight seal, exhibit loss of adhesion or cohesion, or do not cure. Complete forms in Owner's name and register with manufacturer.

C. Extended Correction Period: Correct defective work within 2-year period commencing on Date of Substantial Completion.

PART 2 PRODUCTS

2.01 JOINT SEALANT APPLICATIONS

A. Scope:
   1. Interior Joints: Do not seal interior joints unless specifically indicated to be sealed. Interior joints to be sealed include, but are not limited to, the following items.
      a. Joints between door, window, and other frames and adjacent construction.
      b. In sound-rated wall and ceiling assemblies, gaps at electrical outlets, wiring devices, piping, and other openings; between wall/ceiling and other construction; and other flanking sound paths.
      c. Other joints indicated below.
   2. Do Not Seal:
      a. Intentional weep holes in masonry.
      b. Joints indicated to be covered with expansion joint cover assemblies.

c. Joints where sealant is specified to be furnished and installed by manufacturer of product to be sealed.
d. Joints where sealant installation is specified in other sections.
e. Joints between suspended ceilings and walls.

B. Interior Joints: Use nonsag polyurethane sealant, Type SJ-3, unless otherwise indicated.
1. Wall and Ceiling Joints in Non-Wet Areas: Acrylic emulsion latex sealant; Type SJ-5.
2. In Sound-Rated Assemblies: Acrylic emulsion latex sealant; Type SJ-5.

2.02 JOINT SEALANTS - GENERAL

A. Sealants and Primers: Provide products with acceptable levels of volatile organic compound (VOC) content; see Section 01 6116.

2.03 NONSAG JOINT SEALANTS

A. Type SJ-1 - Non-Staining Silicone Sealant: ASTM C920, Grade NS, Uses M and A; not expected to withstand continuous water immersion or traffic.
1. Movement Capability: Plus and minus 50 percent, minimum.
2. Color: To be selected by Architect from manufacturer's full range.
3. Products:
a. Pecora Corporation; Pecora 864 NST (Non-Staining Technology): www.pecora.com/#sle.
b. Sika Corporation; Sikasil WS-290: usa.sika.com/#sle.
c. Substitutions: See Section 01 6000 - Product Requirements.

B. Type SJ-2 - Mildew-Resistant Silicone Sealant: ASTM C920, Grade NS, Uses M and A; single component, mildew resistant; not expected to withstand continuous water immersion or traffic.
1. Color: Clear.
2. Products:
a. Pecora Corporation; Pecora 898 NST (Non-Staining Technology): www.pecora.com/#sle.
b. Sika Corporation; Sikasil GP: usa.sika.com/#sle.
c. Substitutions: See Section 01 6000 - Product Requirements.

C. Type SJ-3 - Polyurethane Sealant: ASTM C920, Grade NS, Uses M and A; single or multicomponent; not expected to withstand continuous water immersion or traffic.
1. Movement Capability: Plus and minus 35 percent, minimum.
2. Color: To be selected by Architect from manufacturer's full range.
3. Products:
a. Pecora Corporation; DynaFlex: www.pecora.com/#sle.
b. Sika Corporation; Sikaflex-2c NS EZ Mix+: usa.sika.com/#sle.
c. Substitutions: See Section 01 6000 - Product Requirements.

D. Type SJ-4 - Polyurethane Sealant for Continuous Water Immersion: ASTM C920, Grade NS, Uses M and A; single or multicomponent; explicitly approved by manufacturer for continuous water immersion; suitable for traffic exposure when recessed below traffic surface .
1. Movement Capability: Plus and minus 35 percent, minimum.
2. Color: To be selected by Architect from manufacturer's full range.
3. Products:
a. Sika Corporation; Sikaflex-2c NS EZ Mix+: usa.sika.com/#sle.
b. Substitutions: See Section 01 6000 - Product Requirements.

E. Type SJ-5 - Acrylic Emulsion Latex: Water-based; ASTM C834, single component, non-staining, non-bleeding, non-sagging; not intended for exterior use.
1. Color: To be selected by Architect from manufacturer's full range.
2. Products:
a. Pecora Corporation; AIS-919: www.pecora.com.
b. Substitutions: See Section 01 6000 - Product Requirements.

F. Type SJ-6 - Non-Curing Butyl Sealant: Solvent-based; ASTM C1311; single component, nonsag, non-skinning, non-hardening, non-bleeding; vapor-impermeable; intended for fully concealed applications.

2.04 SELF-LEVELING JOINT SEALANTS

A. Type SJ-7 - Self-Leveling Polyurethane Sealant: ASTM C920, Grade P, Uses M and A; single component; explicitly approved by manufacturer for traffic exposure; not expected to withstand continuous water immersion .
   1. Movement Capability: Plus and minus 25 percent, minimum.
   2. Color: To be selected by Architect from manufacturer's full range.
   3. Products:
      a. Sika Corporation; Sikaflex-2c SL: usa.sika.com/#sle.
      b. Substitutions: See Section 01 6000 - Product Requirements.

2.05 ACCESSORIES

A. Backer Rod: Cylindrical cellular foam rod with surface that sealant will not adhere to, compatible with specific sealant used, and recommended by backing and sealant manufacturers for specific application.
   1. Type for Joints Not Subject to Pedestrian or Vehicular Traffic: ASTM C1330; Type C - Closed Cell Polyethylene.
   2. Type for Joints Subject to Pedestrian or Vehicular Traffic: ASTM C1330; Type C - Closed Cell Polyethylene.
   3. Closed Cell and Bi-Cellular: 25 to 33 percent larger in diameter than joint width.

B. Backing Tape: Self-adhesive polyethylene tape with surface that sealant will not adhere to and recommended by tape and sealant manufacturers for specific application.

C. Masking Tape: Self-adhesive, nonabsorbent, nonstaining, removable without adhesive residue, and compatible with surfaces adjacent to joints and sealants.

D. Joint Cleaner: Noncorrosive and nonstaining type, type recommended by sealant manufacturer; compatible with joint forming materials.

E. Primers: Type recommended by sealant manufacturer to suit application; nonstaining.

PART 3 EXECUTION

3.01 EXAMINATION

A. Verify that joints are ready to receive work.

B. Verify that backing materials are compatible with sealants.

C. Verify that backer rods are of the correct size.

3.02 PREPARATION

A. Remove loose materials and foreign matter that could impair adhesion of sealant.

B. Clean joints, and prime as necessary, in accordance with manufacturer's instructions.

C. Perform preparation in accordance with manufacturer's instructions and ASTM C1193.

D. Mask elements and surfaces adjacent to joints from damage and disfigurement due to sealant work; be aware that sealant drips and smears may not be completely removable.

E. Concrete Floor Joints That Will Be Exposed in Completed Work: Test joint filler in an inconspicuous area to verify that it does not stain or discolor slab.

3.03 INSTALLATION

A. Install this work in accordance with sealant manufacturer's requirements for preparation of surfaces and material installation instructions.

B. Provide joint sealant installations complying with ASTM C1193.

C. Install acoustical sealant application work in accordance with ASTM C919.

D. Install bond breaker backing tape where backer rod cannot be used.

E. Install sealant free of air pockets, foreign embedded matter, ridges, and sags, and without getting sealant on adjacent surfaces.

F. Do not install sealant when ambient temperature is outside manufacturer's recommended temperature range, or will be outside that range during the entire curing period, unless manufacturer's approval is obtained and instructions are followed.

G. Nonsag Sealants: Tool surface concave, unless otherwise indicated; remove masking tape immediately after tooling sealant surface.

H. Concrete Floor Joint Filler: After full cure, shave joint filler flush with top of concrete slab.

3.04 POST-OCCUPANCY

A. Post-Occupancy Inspection: Perform visual inspection of entire length of project sealant joints at a time that joints have opened to their greatest width, i.e., at low temperature in thermal cycle. Report failures immediately and repair them.

END OF SECTION

SECTION 07 9513
EXPANSION JOINT COVER ASSEMBLIES

PART 1 GENERAL

1.01 SECTION INCLUDES

A. Expansion joint cover assemblies for wall, ceiling, and roof surfaces.

1.02 RELATED REQUIREMENTS

A. Section 04 2613 - Masonry Veneer: Placement of joint cover assembly frames in masonry.

B. Section 06 1000 - Rough Carpentry

C. Section 07 5400 - Thermoplastic roofing

D. Section 07 6200 - Sheet Metal Flashing and Trim:

E. Section 07 9200 - Joint Sealants: Sealing expansion and control joints using gunnable and pourable sealants.

F. Section 09 2116 - Gypsum Board Assemblies: Placement of expansion joint assemblies in gypsum board walls and ceilings.

G. Section 09 5100 - Suspended Acoustical Ceilings: Expansion joint assemblies in suspended ceiling grids.

1.03 REFERENCE STANDARDS

A. ASTM B221 - Standard Specification for Aluminum and Aluminum-Alloy Extruded Bars, Rods, Wire, Profiles, and Tubes; 2021.

B. ASTM B221M - Standard Specification for Aluminum and Aluminum-Alloy Extruded Bars, Rods, Wire, Profiles, and Tubes (Metric); 2021.

C. ASTM B308/B308M - Standard Specification for Aluminum-Alloy 6061-T6 Standard Structural Profiles; 2020.

D. ASTM E1966 - Standard Test Method for Fire-Resistive Joint Systems; 2015 (Reapproved 2019).

1.04 SUBMITTALS

A. See Section 01 3000 - Administrative Requirements, for submittal procedures.

B. Product Data: Provide joint assembly profiles, profile dimensions, anchorage devices and available colors and finish.

C. Shop Drawings: Indicate joint and splice locations, miters, layout of the work, affected adjacent construction and anchorage locations.

D. Sample: Submit two samples of cover color and finish for each specified cover.

E. Manufacturer's Installation Instructions: Indicate rough-in sizes and required tolerances for item placement.

F. Maintenance Materials: Furnish the following for Owner's use in maintenance of project.
   1. See Section 01 6000 for additional provisions.

PART 2 PRODUCTS

2.01 MANUFACTURERS

A. Expansion Joint Cover Assemblies:
   1. Construction Specialties, Inc; _____: www.c-sgroup.com/#sle.
   2. Inpro; _____: www.inprocorp.com/#sle.
   3. Substitutions: See Section 01 6000 - Product Requirements.

2.02 EXPANSION JOINT COVER ASSEMBLY APPLICATIONS

A. Interior Non-Fire-Rated Wall/Ceiling Joints Subject to Seismic Movement:
   1. Basis of Design:

a. Construction Specialties, Inc; FWSC-600, FWSC-800 AND FWS-800: www.c-sgroup.com/#sle.
   1) Refer to drawings for joint dimensions and cover type.
b. Color to be selected by Architect from manufacturer's standard colors.
c. Substitutions: See Section 01 6000 - Product Requirements.

B. Interior Fire-Rated Wall/Ceiling Joints Subject to Seismic Movement:
1. Basis of Design:
   a. Construction Specialties, Inc; FWSC-600, FWSC-800 and FWS-800: www.c-sgroup.com/#sle..
      1) Refer to drawings for joint dimensions and cover type.
      2) Color: White
   b. Substitutions: See Section 01 6000 - Product Requirements.

C. Exterior Wall, Non-Fire Rated, Joints Subject to Seismic Movement:
1. Basis of Design:
   a. Construction Specialties: SC-800 with Vapor Barrier.
      1) Refer to drawings for joint dimension and type.
      2) Color to be selected by Architect from manufacturer's standard colors.
   b. Substitutions: See Section 01 6000 - Product Requirements.

D. Exterior Roof Expansion Joint Covers:
1. Basis of Design:
   a. Construction Specialties; BRJ-800 and BRJW-800 with Vapor Barrier.
      1) Refer to drawings for joint dimension and cover type.
      2) Color to be selected by Architect from manufacturer's standard colors.
   b. Substitutions: See Section 01 6000 - Product Requirements.

2.03 EXPANSION JOINT COVER ASSEMBLIES

A. Expansion Joint Cover Assemblies - General: Factory-fabricated and assembled; designed to completely fill joint openings, sealed to prevent passage of air, dust, water, smoke; suitable for traffic expected.
1. Joint Dimensions and Configurations: As indicated on drawings.
2. Joint Cover Sizes: If not indicated, select to suit joint width and configuration, based on manufacturer's published recommendations and limitations.
3. Joint Movement Capability: If not indicated, provide minimum plus/minus 50 percent joint movement capability.
4. Lengths: Provide covers in full lengths required; avoid splicing wherever possible.
5. Anchors, Fasteners, and Fittings: Provided by cover manufacturer.

B. Sliding Cover Plate Type Covers: Provide plate with beveled edges and neat fit that does not collect dirt.

C. Covers In Gypsum Board Assemblies: Provide style with anchoring wings that can be completely covered by joint compound.

D. Covers In Fire Rated Assemblies: Provide cover assembly having fire rating equivalent to that of assembly into which it is installed.

2.04 MATERIALS

A. Extruded Aluminum: ASTM B221 (ASTM B221M), 6063 alloy, T6 temper; or ASTM B308/B308M, 6061 alloy, T6 temper.
1. Exposed Finish Outdoors: Color and finish to be selected by Architect from manufacturer's standard options.
2. Exposed Finish at Walls and Ceilings: Kynar 500 Finish, Color to be selected by Architect from manufacturer's standard colors.

B. Anchors and Fasteners: As recommended by cover manufacturer.

C. Ferrous Metal Anchors: Galvanized where embedded in concrete or in contact with cementitious materials.

D. Threaded Fasteners: Aluminum.

E. Backing Paint for Aluminum Components in Contact with Cementitious Materials: Asphaltic type.

2.05 ACCESSORIES

A. Resilient Fire Barrier: For use with metal expansion joint covers and elastomeric seals without use of mechanical fasteners, with fire rating in accordance with surrounding construction performance capabilities.

PART 3 EXECUTION

3.01 EXAMINATION

A. Verify that joint preparation and dimensions are acceptable and in accordance with manufacturer's requirements.

B. Verify that frames and anchors installed by others are in correct locations and suitable for installation of remainder of assembly.

3.02 INSTALLATION

A. Install components and accessories in accordance with manufacturer's instructions.

B. Align work plumb and level.

C. Rigidly anchor to substrate to prevent misalignment.

3.03 PROTECTION

A. Do not permit traffic over unprotected floor joint surfaces.

END OF SECTION

This page intentionally left blank

SECTION 08 1113
HOLLOW METAL DOORS AND FRAMES

PART 1 GENERAL

1.01 SECTION INCLUDES

A. Non-fire-rated hollow metal doors and frames.

B. Hollow metal frames for wood doors.

C. Thermally insulated hollow metal doors with frames.

1.02 RELATED REQUIREMENTS

A. Section 08 7100 - Door Hardware.

B. Section 09 9113 - Exterior Painting: Field painting.

C. Section 09 9123 - Interior Painting: Field painting.

1.03 ABBREVIATIONS AND ACRONYMS

A. ANSI: American National Standards Institute.

B. HMMA: Hollow Metal Manufacturers Association.

C. NAAMM: National Association of Architectural Metal Manufacturers.

D. NFPA: National Fire Protection Association.

E. SDI: Steel Door Institute.

F. UL: Underwriters Laboratories.

1.04 REFERENCE STANDARDS

A. ADA Standards - 2010 ADA Standards for Accessible Design; 2010.

B. ANSI/SDI A250.4 - Test Procedure and Acceptance Criteria for Physical Endurance for Steel Doors, Frames and Frame Anchors; 2022.

C. ANSI/SDI A250.8 - Specifications for Standard Steel Doors and Frames (SDI-100); 2023.

D. ANSI/SDI A250.10 - Test Procedure and Acceptance Criteria for Prime Painted Steel Surfaces for Steel Doors and Frames; 2020.

E. ASTM A653/A653M - Standard Specification for Steel Sheet, Zinc-Coated (Galvanized) or Zinc-Iron Alloy-Coated (Galvannealed) by the Hot-Dip Process; 2023.

F. ASTM A1008/A1008M - Standard Specification for Steel, Sheet, Cold-Rolled, Carbon, Structural, High-Strength Low-Alloy, High-Strength Low-Alloy with Improved Formability, Required Hardness, Solution Hardened, and Bake Hardenable; 2021a.

G. ASTM A1011/A1011M - Standard Specification for Steel, Sheet and Strip, Hot-Rolled, Carbon, Structural, High-Strength Low-Alloy, High-Strength Low-Alloy with Improved Formability, and Ultra-High Strength; 2023.

H. BHMA A156.115 - Hardware Preparation in Steel Doors and Frames; 2016.

I. ICC A117.1 - Accessible and Usable Buildings and Facilities; 2017.

J. NAAMM HMMA 830 - Hardware Selection for Hollow Metal Doors and Frames; 2002.

K. NAAMM HMMA 831 - Hardware Locations for Hollow Metal Doors and Frames; 2011.

L. NAAMM HMMA 840 - Guide Specifications For Receipt, Storage and Installation of Hollow Metal Doors and Frames; 2017.

M. NAAMM HMMA 861 - Guide Specifications for Commercial Hollow Metal Doors and Frames; 2014.

N. SDI 117 - Manufacturing Tolerances for Standard Steel Doors and Frames; 2023.

1.05 SUBMITTALS

A. See Section 01 3000 - Administrative Requirements for submittal procedures.

B. Product Data: Materials and details of design and construction, hardware locations, reinforcement type and locations, anchorage and fastening methods, and finishes.

C. Shop Drawings: Details of each opening, showing elevations, glazing, frame profiles, and any indicated finish requirements.

1.06 QUALITY ASSURANCE

A. Manufacturer Qualifications: Company specializing in manufacturing products specified in this section, with not less than three years documented experience.

B. Installer Qualifications: Company specializing in performing work of the type specified and with at least three years of documented experience.

C. Maintain at project site copies of reference standards relating to installation of products specified.

1.07 DELIVERY, STORAGE, AND HANDLING

A. Comply with NAAMM HMMA 840 or ANSI/SDI A250.8 (SDI-100) in accordance with specified requirements.

B. Protect with resilient packaging; avoid humidity build-up under coverings; prevent corrosion and adverse effects on factory applied painted finish.

PART 2 PRODUCTS

2.01 PERFORMANCE REQUIREMENTS

A. Requirements for Hollow Metal Doors and Frames:
   1. Steel Sheet: Comply with one or more of the following requirements; galvannealed steel complying with ASTM A653/A653M, cold-rolled steel complying with ASTM A1008/A1008M, or hot-rolled pickled and oiled (HRPO) steel complying with ASTM A1011/A1011M, commercial steel (CS) Type B, for each.
   2. Accessibility: Comply with ICC A117.1 and ADA Standards.
   3. Door Edge Profile: Manufacturers standard for application indicated.
   4. Typical Door Face Sheets: Flush.
   5. Hardware Preparations, Selections and Locations: Comply with NAAMM HMMA 830 and NAAMM HMMA 831 or BHMA A156.115 and ANSI/SDI A250.8 (SDI-100) in accordance with specified requirements.

B. Combined Requirements: If a particular door and frame unit is indicated to comply with more than one type of requirement, comply with the specified requirements for each type; for instance, an exterior door that is also indicated as being sound-rated must comply with the requirements specified for exterior doors and for sound-rated doors; where two requirements conflict, comply with the most stringent.

2.02 HOLLOW METAL DOORS

A. Door Finish: Factory primed and field finished.

B. Exterior Doors: Thermally insulated.
   1. Based on SDI Standards: ANSI/SDI A250.8 (SDI-100).
      a. Level 4 - Maximum-duty.
      b. Physical Performance Level A 1 000 000 cycles; in accordance with ANSI/SDI A250.4.
      c. Model 2 - Seamless.
      d. Door Face Metal Thickness: 20 gauge, 0.032 inch, minimum.
      e. Zinc Coating: A60/ZF180 galvannealed coating; ASTM A653/A653M.
   2. Door Core Material: Manufacturers standard core material/construction and in compliance with requirements.
   3. Door Thickness: 1-3/4 inches, nominal.
   4. Top Closures: Flush with top of faces and edges.

2.03 HOLLOW METAL FRAMES

A. Comply with standards and/or custom guidelines as indicated for corresponding door in accordance with applicable door frame requirements.

B. Frame Finish: Factory primed and field finished.

C. Exterior Door Frames: Full profile/continuously welded type.
   1. Frame Metal Thickness: 14 gage, 0.067 inch, minimum.
   2. Weatherstripping: Separate, see Section 08 7100.

D. Interior Door Frames, Non-Fire Rated: Full profile/continuously welded type.
   1. Frame Metal Thickness: 16 gage, 0.053 inch, minimum.

E. Frames for Wood Doors: Comply with frame requirements in accordance with corresponding door.

F. Borrowed Lites Glazing Frames: Construction and face dimensions to match door frames, and as indicated on drawings.

G. Provide guard boxes for hardware cut-outs in exterior frames to be filled with spray foam insulation.

H. Frames in Masonry Walls: Size to suit masonry coursing with head member 4 inches high to fill opening without cutting masonry units.

2.04 FINISHES

A. Primer: Rust-inhibiting, complying with ANSI/SDI A250.10, door manufacturer's standard.

B. Bituminous Coating: Cold-applied asphalt mastic, compounded for 15 mil, 0.015 inch dry film thickness (DFT) per coat; provide inert-type noncorrosive compound free of asbestos fibers, sulfur components, and other deleterious impurities.

2.05 ACCESSORIES

A. Glazing: As specified in Section 08 8000.

B. Removable Stops: Formed sheet steel, shape as indicated on drawings, mitered or butted corners; prepared for countersink style tamper proof screws.

C. Silencers: Resilient rubber, fitted into drilled hole; provide three on strike side of single door, three on center mullion of pairs, and two on head of pairs without center mullions.

D. Temporary Frame Spreaders: Provide for factory- or shop-assembled frames.

PART 3 EXECUTION

3.01 EXAMINATION

A. Verify existing conditions before starting work.

B. Verify that opening sizes and tolerances are acceptable.

C. Verify that finished walls are in plane to ensure proper door alignment.

3.02 PREPARATION

A. Coat inside of frames to be installed in masonry or to be grouted, with bituminous coating, prior to installation.

3.03 INSTALLATION

A. Install doors and frames in accordance with manufacturer's instructions and related requirements of specified door and frame standards or custom guidelines indicated.

B. Coordinate frame anchor placement with wall construction.

C. Fill exterior frames with spray foam insulation; brace frames so that pressure of spray foam before setting will not deform frames.

D. Install door hardware as specified in Section 08 7100.

E. Comply with glazing installation requirements of Section 08 8000.

F. Coordinate installation of electrical connections to electrical hardware items.
   1. Install required conduit in frames prior to grouting or spray foam application.

G. Touch up damaged factory finishes.

3.04 TOLERANCES

A. Clearances Between Door and Frame: Comply with related requirements of specified frame standards or custom guidelines indicated in accordance with SDI 117 or NAAMM HMMA 861.

B. Maximum Diagonal Distortion: 1/16 inch measured with straight edge, corner to corner.

3.05 ADJUSTING

A. Adjust for smooth and balanced door movement.

B. Adjust sound control doors so that seals are fully engaged when door is closed.

C. Test sound control doors for force to close, latch, and unlatch; adjust as necessary in compliance with requirements.

3.06 SCHEDULE

A. Refer to Door and Frame Schedule on the drawings.

END OF SECTION

SECTION 08 3100
ACCESS DOORS AND PANELS

PART 1 GENERAL

1.01 SECTION INCLUDES

A. Wall- and ceiling-mounted access units.

1.02 RELATED REQUIREMENTS

1.03 SUBMITTALS

A. See Section 01 3000 - Administrative Requirements for submittal procedures.

B. Product Data: Provide sizes, types, finishes, hardware, scheduled locations, and details of adjoining work.

C. Shop Drawings: Indicate exact position of each access door and/or panel unit.

D. Project Record Documents: Record actual locations of each access unit.

PART 2 PRODUCTS

2.01 ACCESS DOORS AND PANELS ASSEMBLIES

A. Wall-Mounted Units:
1. Location: Provide new unit if existing unit is demolished or damaged during construction. Locate in same place as existing unit..
2. Panel Material: Aluminum extrusions with gypsum board inlay.
3. Size: Match existing unit size.
4. Door/Panel: Hinged, standard duty, with tamper-proof tool-operated spring or cam lock and no handle.
5. Wall Mounting Criteria: Provide surface-mounted face frame and door surface flush with frame surface.

B. Wall-Mounted Units in Wet Areas:
1. Location: Provide new unit if existing unit is demolished or damaged during construction. Locate in same place as existing unit..
2. Panel Material: Stainless steel, Type 304.
3. Size: Match existing unit size.
4. Door/Panel: Hinged, standard duty, with tamper-proof tool-operated spring or cam lock and no handle.
5. Wall Mounting Criteria: Provide surface-mounted face frame and door surface flush with frame surface.

C. Ceiling-Mounted Units:
1. Panel Material: Aluminum extrusion with gypsum board inlay.
2. Size - Lay-In Grid Ceilings: To match module of ceiling grid.
3. Size - Other Locations: Match existing unit size.
4. Door/Panel: Hinged, standard duty, with tamper-proof tool-operated spring or cam lock and no handle.

2.02 WALL- AND CEILING-MOUNTED ACCESS UNITS

A. Manufacturers:
1. ACUDOR Products Inc: www.acudor.com/#sle.
2. Babcock-Davis: www.babcockdavis.com/#sle.
3. Cendrex, Inc: www.cendrex.com/#sle.
4. Karp Associates, Inc: www.karpinc.com/#sle.
5. Milcor, Inc: www.milcorinc.com/#sle.
6. Nystrom, Inc: www.nystrom.com/#sle.
7. Substitutions: See Section 01 6000 - Product Requirements.

B. Wall- and Ceiling-Mounted Units: Factory-fabricated door and frame, fully assembled units with corner joints welded, filled and ground flush; square and without rack or warp; coordinate requirements with type of installation assembly being used for each unit.
   1. Door Style: Single thickness with rolled or turned in edges.
   2. Heavy-Duty Frames: 14-gauge, 0.0747-inch minimum thickness.
   3. Heavy-Duty Single Steel Sheet Door Panels: 14-gauge, 0.0747-inch minimum thickness.
   4. Double-Skinned Hollow Steel Sheet Door Panels: 16-gauge, 0.059-inch minimum thickness, on both sides and along each edge.
   5. Insulation: Non-combustible mineral wool or glass fiber.
   6. Stainless Steel Finish: No.4 brushed finish.
   7. Hardware:
      a. Hinges for Non-Fire-Rated Units: Concealed, constant force closure spring type.
      b. Latch/Lock: Cylinder lock-operated cam latch, two keys for each unit.

PART 3 EXECUTION

3.01 EXAMINATION

A. Verify that rough openings are correctly sized and located.

B. Provide proposed locations on shop drawings and in BIM for approval prior to starting installation.

C. Begin installation only after substrates have been properly prepared, and if the responsibility of another installer, notify Architect of unsatisfactory preparation before proceeding.

3.02 PREPARATION

A. Clean surfaces thoroughly prior to proceeding with this work.

B. Prepare surfaces using methods recommended by manufacturer for applicable substrates in accordance with project conditions.

3.03 INSTALLATION

A. Install units in accordance with manufacturer's instructions.

B. Install frames plumb and level in openings, and secure units rigidly in place.

C. Position units to provide convenient access to concealed equipment when necessary.

END OF SECTION

SECTION 08 4523
TRANSLUCENT FIBERGLASS SANDWICH PANEL WALL SYSTEM

PART 1 - GENERAL

1.01 SUMMARY

A. Section includes the insulated translucent sandwich panel system and accessories, factory unitized, as shown and specified. Work includes providing and installing:
   1. Flat factory prefabricated structural insulated translucent sandwich panels
   2. Aluminum installation system
   3. Aluminum sill flashing

B. Section includes structural design of system with calculations using wind load criteria listed on structural drawings or manufacturer's standard wind load tables and standard stiffener sections.

1.02 SUBMITTALS

A. Submit manufacturer’s product data. Include construction details, material descriptions, profiles and finishes of components, assembly u value, solar heat gain coeffcicient and visible light transmission.

B. Submit shop drawings. Include elevations and details.

C. Submit manufacturer's color charts showing the full range of colors available for factory-finished aluminum.

D. Structural calculations stamped by Oregon licensed engineer.

E. See Section 01 3000 - Administrative Requirements, for submittal procedures.

1.03 QUALITY ASSURANCE

A. Manufacturer's Qualifications
   1. Material and products shall be manufactured by a company continuously and regularly employed in the manufacture of specified materials for a period of at least ten consecutive years and which can show evidence of those materials being satisfactorily used on at least six projects of similar size, scope and location. At least three of the projects shall have been in successful use for ten years or longer.

B. Installer’s Qualifications: Installation shall be by an experienced installer, which has been in the business of installing specified panel systems for at least two consecutive years and can show evidence of satisfactory completion of projects of similar size, scope and type.

1.04 PERFORMANCE REQUIREMENTS

A. The manufacturer shall be responsible for the configuration and fabrication of the complete unitized panel system.
   1. Include structural analysis signed and sealed by the qualified professional engineer responsible for their preparation.
   2. Standard panel system shall have less than 0.01 cfm/ft² air leakage by ASTM E 283 at 6.24 PSF (50 mph) and no water penetration by ASTM E 331 at 15 PSF; and structural testing by ASTM E 330.
   3. Structural design criteria as indicated on drawings.

1.05 DELIVERY STORAGE AND HANDLING

A. Deliver panel system, components and materials in manufacturer's standard protective packaging.

B. Store panels on the long edge; several inches above the ground, blocked and under cover in accordance with manufacturer's storage and handling instructions.

1.06 WARRANTY

A. Submit manufacturer's and installer's written warranty agreeing to repair or replace panel system work, which fails in materials or workmanship within one year of the date of delivery. Failure of

materials or workmanship shall include leakage, excessive deflection, deterioration of finish on metal in excess of normal weathering, defects in accessories, insulated translucent sandwich panels and other components of the work.

PART 2 - PRODUCTS

2.01 MANUFACTURER

A. Basis of Design: Kalwall: www.kawall.com.

B. Other Acceptable Manufacturers:
   1. Major Industries, Inc.: www.majorskylights.com.
   2. Substitutions: See Section 01 6000 - Product Requirements.

2.02 PANEL COMPONENTS

A. Face Sheets
   1. Translucent faces: Manufactured from glass fiber reinforced thermoset resins, formulated specifically for architectural use.
      a. Interior face sheets:
         1) Flame spread: Underwriters Laboratories (UL) listed, which requires periodic unannounced retesting, with flame spread rating no greater than 50 and smoke developed no greater than 250 when tested in accordance with UL 723.
      b. Exterior face sheets:
         1) Color stability: Full thickness of the exterior face sheet shall not change color more than 3 CIE Units DELTA E by ASTM D 2244 after 5 years outdoor South Florida weathering at 5° facing south, determined by the average of at least three white samples with and without a protective film or coating to ensure long-term color stability. Color stability shall be unaffected by abrasion or scratching.
      c. Appearance:
         1) Exterior face sheets: Smooth .07" thick and "Crystal" color.
         2) Interior face sheets: Smooth .045" thick and "Crystal" color.

B. Grid Core
   1. Aluminum I-beam grid core shall be of 6063-T6 or 6005-T5 alloy and temper with provisions for mechanical interlocking of muntin-mullion and perimeter. Width of I-beam shall be no less than 7/16”.
   2. I-beam Thermal break: Minimum 1”, thermoset fiberglass composite.

C. Insulation: Manufacturer's standard insulation as required to achieve sepcified U-Factor.

D. Laminate Adhesive
   1. Heat and pressure resin type adhesive engineered for structural sandwich panel use, with minimum 25-years field use. Adhesive shall pass testing requirements specified by the International CodeCouncil “Acceptance Criteria for Sandwich Panel Adhesives”.
   2. Minimum tensile strength of 750 PSI when the panel assembly is tested by ASTM C 297 after two exposures to six cycles each of the aging conditions prescribed by ASTM D 1037.
   3. Minimum shear strength of the panel adhesive by ASTM D 1002 after exposure to four separate conditions:
      a. 50% Relative Humidity at 68° F: 540 PSI
      b. 182° F: 100 PSI
      c. Accelerated Aging by ASTM D 1037 at room temperature: 800 PSI
      d. Accelerated Aging by ASTM D 1037 at 182° F: 250 PSI

2.03 PANEL CONSTRUCTION

A. Provide sandwich panels of flat fiberglass reinforced translucent face sheets laminated to a grid core of mechanically interlocking I-beams. The adhesive bonding line shall be straight, cover the entire width of the I-beam and have a neat, sharp edge.
   1. Thickness: 2-3/4”
   2. Light transmission: 30%

3. Solar heat gain coefficient .33.
4. Panel U-factor by NFRC certified laboratory: 2-3/4” thermally broken grid.
5. Grid pattern: Indicated on drawings; pattern "Reverse Shoji".

2.04 BATTENS AND PERIMETER CLOSURE SYSTEM

A. Closure system: Snap on Cover thermal break extruded aluminum 6063-T6 and 6063-T5 alloy and temper clamp-tite screw type closure system.

B. Sealing tape: Manufacturer's standard, pre-applied to closure system at the factory under controlled conditions.

C. Fasteners: 300 series stainless steel screws for aluminum closures, excluding final fasteners to the building.

D. Finish:
   1. Manufacturer's factory applied finish, which meets the performance requirements of AAMA 2604. Color to be selected from manufacturer's standards.

PART 2 - EXECUTION

3.01 EXAMINATION

A. Examine substrates, supporting structure and installation conditions.

B. Do not proceed with panel installation until unsatisfactory conditions have been corrected.

3.02 PREPARATION

A. Metal Protection:
   1. Where aluminum will contact dissimilar metals, protect against galvanic action by painting contact surfaces with primer or by applying sealant or tape recommended by manufacturer for this purpose.
   2. Where aluminum will contact concrete, masonry or pressure treated wood, protect against corrosion by painting contact surfaces with bituminous paint or method recommended by manufacturer.

3.03 INSTALLATION

A. Install the panel system in accordance with the manufacturer's suggested installation recommendations and approved shop drawings.
   1. Anchor component parts securely in place by permanent mechanical attachment system.
   2. Accommodate thermal and mechanical movements.
   3. Set perimeter framing in a full bed of sealant compound, or with joint fillers or gaskets to provide weather-tight construction.

B. Install joint sealants at perimeter joints and within the panel system in accordance with manufacturer's installation instructions.

3.04 CLEANING

A. Clean the panel system interior and exterior, immediately after installation.

B. Refer to manufacturer's written recommendations.

END OF SECTION

This page intentionally left blank

SECTION 08 5113
ALUMINUM WINDOWS

PART 1 GENERAL

1.01 SECTION INCLUDES

A. Extruded aluminum windows with fixed sash, operating sash, and infill panels.

B. Factory glazing.

C. Operating hardware.

D. Insect screens.

1.02 RELATED REQUIREMENTS

A. Section 06 1000 - Rough Carpentry: Rough opening framing.

B. Section 07 2500 - Weather Barriers: Sealing frame to water-resistive barrier installed on adjacent construction.

C. Section 07 9200 - Joint Sealants: Sealing joints between window frames and adjacent construction.

D. Section 08 8000 - Glazing.

1.03 REFERENCE STANDARDS

A. AAMA/WDMA/CSA 101/I.S.2/A440 - North American Fenestration Standard/Specification for Windows, Doors, and Skylights; 2022.

B. AAMA CW-10 - Care and Handling of Architectural Aluminum from Shop to Site; 2015.

C. AAMA 502 - Voluntary Specification for Field Testing of Newly Installed Fenestration Products; 2021.

D. AAMA 609 & 610 - Cleaning and Maintenance Guide for Architecturally Finished Aluminum (Combined Document); 2015.

E. AAMA 611 - Voluntary Specification for Anodized Architectural Aluminum; 2020.

F. ASTM A123/A123M - Standard Specification for Zinc (Hot-Dip Galvanized) Coatings on Iron and Steel Products; 2017.

G. ASTM B221 - Standard Specification for Aluminum and Aluminum-Alloy Extruded Bars, Rods, Wire, Profiles, and Tubes; 2021.

H. ASTM B221M - Standard Specification for Aluminum and Aluminum-Alloy Extruded Bars, Rods, Wire, Profiles, and Tubes (Metric); 2021.

I. ASTM E783 - Standard Test Method for Field Measurement of Air Leakage Through Installed Exterior Windows and Doors; 2002 (Reapproved 2018).

J. ASTM E1105 - Standard Test Method for Field Determination of Water Penetration of Installed Exterior Windows, Skylights, Doors, and Curtain Walls, by Uniform or Cyclic Static Air Pressure Difference; 2015 (Reapproved 2023).

1.04 ADMINISTRATIVE REQUIREMENTS

A. Preinstallation Meeting: Convene one week before starting work of this section.

1.05 SUBMITTALS

A. See Section 01 3000 - Administrative Requirements for submittal procedures.

B. Product Data: Include component dimensions, information on glass and glazing, internal drainage details, and descriptions of hardware and accessories.

C. Shop Drawings: Indicate opening dimensions, framed opening tolerances, anchorage locations, _____ , method for achieving air and vapor barrier seal to adjacent construction, and installation requirements.

D. Samples:

E. Samples: Submit two samples, 12 by 12 inch in size illustrating typical corner construction, accessories, and finishes.

F. Grade Substantiation: Prior to submitting shop drawings or starting fabrication, submit one of the following showing compliance with specified grade:
   1. Evidence of AAMA Certification.
   2. Evidence of WDMA Certification.
   3. Evidence of CSA Certification.
   4. Test report(s) by independent testing agency itemizing compliance and acceptable to authorities having jurisdiction.

G. Field Quality Control Submittals: Report of field testing for water penetration and air leakage.

H. Warranty: Submit manufacturer warranty and ensure that forms have been completed in Owner's name and registered with manufacturer.

1.06 QUALITY ASSURANCE

A. Manufacturer Qualifications: Company specializing in manufacturing products specified in this section with minimum five years of documented experience.

B. Installer Qualifications: Company specializing in performing work of type specified and with at least three years of documented experience.

1.07 DELIVERY, STORAGE, AND HANDLING

A. Comply with requirements of AAMA CW-10.

B. Protect finished surfaces with wrapping paper or strippable coating during installation. Do not use adhesive papers or sprayed coatings that bond to substrate when exposed to sunlight or weather.

1.08 FIELD CONDITIONS

A. Do not install sealants when ambient temperature is less than 40 degrees F.

B. Maintain this minimum temperature during and 24 hours after installation of sealants.

1.09 WARRANTY

A. See Section 01 7800 - Closeout Submittals for additional warranty requirements.

B. Correct defective work within a five year period after Date of Substantial Completion.

C. Provide ten year manufacturer warranty against failure of glass seal on insulating glass units, including interpane dusting or misting. Include provision for replacement of failed units.

D. Provide ten year manufacturer warranty against excessive degradation of exterior finish. Include provision for replacement of units with excessive fading, chalking, or flaking.

PART 2 PRODUCTS

2.01 MANUFACTURERS

A. Basis of Design: Marlin Commercial Window 1505 Series Fixed and 3500 Series Slider; www.marlinwindows.com.

B. Other Acceptable - Aluminum Window Manufacturers:
   1. Boyd Aluminum; Series 1000 Fixed and Series 900 Slider: www.boydaluminum.com/#sle.
   2. Substitutions: See Section 01 6000 - Product Requirements.

2.02 ALUMINUM WINDOWS

A. Aluminum Windows: Extruded aluminum frame and sash, factory fabricated, factory finished, with operating hardware, related flashings, and anchorage and attachment devices.
   1. Provide factory-glazed units.

2. Fabrication: Joints and corners flush, hairline, and weatherproof, accurately fitted and secured; prepared to receive anchors; fasteners and attachments concealed from view; reinforced as required for operating hardware and imposed loads.
3. Perimeter Clearance: Minimize space between framing members and adjacent construction while allowing expected movement.
4. Movement: Accommodate movement between window and perimeter framing and deflection of lintel, without damage to components or deterioration of seals.
5. System Internal Drainage: Drain to the exterior by means of a weep drainage network any water entering joints, condensation occurring in glazing channel, and migrating moisture occurring within system.

B. Fixed, Non-Operable Type:
1. Construction: Thermally broken.
2. Glazing: Double; clear; transparent.
3. Exterior Finish: Class I color anodized.
4. Interior Finish: Class I color anodized.

C. Horizontal Sliding Type:
1. Construction: Thermally broken.
2. Provide screens.
3. Glazing: Double; clear; transparent.
4. Exterior Finish: Class I color anodized.
5. Interior Finish: Class I color anodized.

2.03 PERFORMANCE REQUIREMENTS

A. Grade: AAMA/WDMA/CSA 101/I.S.2/A440 requirements for specific window type:
1. Performance Class (PC): CW.
2. Performance Grade (PG): 30, with minimum design pressure (DP) of 30.08 psf.

B. Overall Thermal Transmittance (U-value): 0.35, maximum, including glazing, measured on window sizes required for this project.

2.04 COMPONENTS

A. Fixed Frames: 2 inch wide by 2-1/4 inch minumum deep profile, of 0.062 inch thick section; thermally broken with interior portion of frame insulated from exterior portion; flush glass stops of snap-on type.

B. Operable Frames: 1-1/4 inch wide by 3-3/8 inch deep profile of 0.062 inch thick section; thermally broken with interior portion of frame insulated from exterior portion; flush glass stops of snap-on type.

C. Glazing: See Section 08 8000.
1. For Exterior Windows: Type Insulated glass units..

D. Reinforced Mullion: 2 inch profile of extruded aluminum with integral reinforcement of shaped steel structural section.

E. Insect Screens: Extruded aluminum frame with mitered and reinforced corners; screen mesh taut and secure to frame; secured to window with adjustable hardware allowing screen removal without use of tools.
1. Hardware: Spring loaded steel pins; four per screen unit.
2. Screen Mesh: Vinyl-coated fiberglass, window manufacturer's standard mesh.
3. Frame Finish: Same as frame and sash.

F. Operable Sash Weatherstripping: Wool pile; permanently resilient, profiled to achieve effective weather seal.

G. Sealant for Setting Sills and Sill Flashing: Non-curing butyl type.
1. See Section 07 9200 for additional requirements.

2.05 MATERIALS

A. Extruded Aluminum: ASTM B221 (ASTM B221M), 6063 alloy, T6 temper.

B. Concealed Steel Items: Profiled to suit mullion sections; galvanized in accordance with ASTM A123/A123M.

2.06 HARDWARE

A. Pulls: Manufacturer's standard type.

2.07 FINISHES

A. Class I Color Anodized Finish: AAMA 611 AA-M12C22A42, integrally colored anodic coating not less than 0.7 mil thick.

B. Finish Color: Dark Bronze.

C. Operator and Exposed Hardware: Enameled to color as selected from manufacturer's standard line.

PART 3 EXECUTION

3.01 EXAMINATION

A. Verify that wall openings and adjoining water-resistive barrier materials are ready to receive aluminum windows; see Section 07 2500.

3.02 INSTALLATION

A. Install windows in accordance with manufacturer's instructions.

B. Install window assembly in accordance with AAMA/WDMA/CSA 101/I.S.2/A440.

C. Attach window frame and shims to perimeter opening to accommodate construction tolerances and other irregularities.

D. Align window plumb and level, free of warp or twist. Maintain dimensional tolerances and alignment with adjacent work.

E. Install sill and sill end angles.

F. Set sill members and sill flashing in continuous bead of sealant.

G. Provide thermal isolation where components penetrate or disrupt building insulation. Pack fibrous insulation in shim spaces at perimeter of assembly to maintain continuity of thermal barrier.

H. Install operating hardware not pre-installed by manufacturer.

I. Install glass and infill panels in accordance with requirements; see Section 08 8000.

3.03 TOLERANCES

A. Maximum Variation from Level or Plumb: 1/16 inches every 3 ft non-cumulative or 1/8 inches per 10 ft, whichever is less.

3.04 FIELD QUALITY CONTROL

A. See Section 01 4000 - Quality Requirements for independent field testing and inspection requirements, and requirements for monitoring quality of specified product installations.

B. Provide field testing of installed aluminum windows by independent laboratory in accordance with AAMA 502 and AAMA/WDMA/CSA 101/I.S.2/A440 during construction process and before installation of interior finishes.

1. Conduct tests on individual windows prior to 50 percent and 90 percent completion of this work.
2. Field test for water penetration in accordance with ASTM E1105 using Procedure B - cyclic static air pressure difference; test pressure shall not be less than 1.9 psf.
3. Field test for air leakage in accordance with ASTM E783 with uniform static air pressure difference of 1.57 psf.

C. Repair or replace fenestration components that have failed designated field testing, and retest to verify performance complies with specified requirements.

3.05 ADJUSTING

A. Adjust hardware for smooth operation and secure weathertight closure.

3.06 CLEANING

A. See Section 01 7419 - Construction Waste Management and Disposal for additional requirements.

B. Remove protective material from factory finished aluminum surfaces.

C. Wash surfaces by method recommended and acceptable to window manufacturer; rinse and wipe surfaces clean.

D. Upon completion of installation, thoroughly clean aluminum surfaces in accordance with AAMA 609 & 610.

END OF SECTION

This page intentionally left blank

SECTION 08 7100
DOOR HARDWARE

PART 1 GENERAL

1.01 REFERENCE STANDARDS

A. BHMA A156.2 - Bored and Preassembled Locks and Latches; 2022.

B. BHMA A156.4 - Door Controls - Closers; 2019.

C. BHMA A156.8 - Door Controls - Overhead Stops and Holders; 2021.

D. BHMA A156.18 - Materials and Finishes; 2020.

E. BHMA A156.21 - Thresholds; 2019.

F. BHMA A156.22 - Standard for Gasketing; 2021.

G. BHMA A156.115 - Hardware Preparation in Steel Doors and Frames; 2016.

H. BHMA A156.115W - Hardware Preparation in Wood Doors with Wood or Steel Frames; 2006.

I. DHI (LOCS) - Recommended Locations for Architectural Hardware for Standard Steel Doors and Frames; 2004.

J. DHI WDHS.3 - Recommended Locations for Architectural Hardware for Flush Wood Doors; 1993; also in WDHS-1/WDHS-5 Series, 1996.

1.02 ADMINISTRATIVE REQUIREMENTS

A. Coordinate the manufacture, fabrication, and installation of products that door hardware will be installed upon.

B. Furnish templates for door and frame preparation to manufacturers and fabricators of products requiring internal reinforcement for door hardware.

C. Preinstallation Meeting: Convene a preinstallation meeting week prior to commencing work of this section; require attendance by all affected installers.

1.03 SUBMITTALS

A. See Section , for submittal procedures.

B. Product Data: Manufacturer's catalog literature for each type of hardware, marked to clearly show products to be furnished for this project.

C. Hardware Schedule: Detailed listing of each item of hardware to be installed on each door. Use door numbering scheme as included in the Contract Documents. Identify electrically operated items and include power requirements.

D. Keying Schedule: Submit for approval of Owner.

E. Maintenance Data: Include data on operating hardware, lubrication requirements, and inspection procedures related to preventative maintenance.

F. Keys: Deliver with identifying tags to Owner by security shipment direct from hardware supplier.

G. Warranty: Submit manufacturer's warranty and ensure that forms have been completed in Owner's name and registered with manufacturer.

H. Project Record Documents: Record actual locations of concealed equipment, services, and conduit.

1.04 QUALITY ASSURANCE

A. Hardware Supplier Qualifications: Company specializing in supplying the type of products specified in this section with at least years experience.

B. Hardware Supplier Personnel: Employ to assist in the work of this section.

1.05 DELIVERY, STORAGE, AND HANDLING

A. Package hardware items individually; label and identify each package with door opening code to match hardware schedule.

1.06 WARRANTY

A. See Section , for additional warranty requirements.

PART 2 PRODUCTS

2.01 GENERAL REQUIREMENTS

A. Provide door hardware specified, or as required to make doors fully functional, compliant with applicable codes, and secure to the extent indicated.

B. Provide items of a single type of the same model by the same manufacturer.

C. Provide products that comply with the following:
   1. Applicable provisions of .
   2. Hardware Preparation for Steel Doors and Steel Frames: BHMA A156.115.
   3. Hardware Preparation for Wood Doors with Wood or Steel Frames: BHMA A156.115W.
   4. Products Requiring Electrical Connection: Listed and classified by as suitable for the purpose specified and indicated.

D. Function: Lock and latch function numbers and descriptions of manufacturers series as described in hardware sets.

E. Electrically Operated and/or Controlled Hardware: Provide all power supplies, power transfer hinges, relays, and interfaces required for proper operation; provide wiring between hardware and control components and to building power connection.

F. Finishes: Provide door hardware of the same finish unless otherwise indicated in hardware sets.
   1. Finish:
   2. Finish Definitions: BHMA A156.18.
   3. Exceptions:
      a. Where base metal is specified to be different, provide finish that is an appearance equivalent according to BHMA A156.18.

2.02 LOCKS AND LATCHES

A. Locks: Provide a lock for every door, unless specifically indicated as not requiring locking.
   1. Trim: Provide lever handle or pull trim on outside of all locks unless specifically stated to have no outside trim.
   2. Lock Cylinders: Provide key access on outside of all locks unless specifically stated to have no locking or no outside trim.

B. Lock Cylinders: Manufacturer’s standard tumbler type, core.
   1. Provide cams and/or tailpieces as required for locking devices required.

C. Keying:

D. Latches: Provide a latch for every door that is not required to lock, unless specifically indicated "push/pull" or "not required to latch".

2.03 HINGES

A. Hinges: Provide hinges on every swinging door.
   1. Provide five-knuckle full mortise butt hinges unless otherwise indicated.
   2. Provide ball-bearing hinges at .
   3. Provide hinges in the quantities indicated.
   4. Provide non-removable pins on outswinging doors.
   5. Where electrified hardware is mounted in door leaf, provide power transfer hinges.

B. Quantity of Hinges Per Door:
   1. Doors From High up to High: Three hinges.

2. Doors High up to High: Four hinges.

C. Manufacturers - Hinges:
1. Ives.
2. Substitutions:

2.04 CYLINDRICAL LOCKSETS

A. Locking Functions: As defined in BHMA A156.2, and as follows.

B. Manufacturers - Cylindrical Locksets:
1. Schlage.
2. Substitutions:

2.05 AUXILIARY LOCKS (DEADBOLTS)

A. Manufacturers - Auxiliary Locks (Deadbolts):
1. Schlage.
2. Substitutions:

2.06 FLUSHBOLTS

A. Manual Flushbolts: Provide lever extensions for top bolt at over-size doors.

B. Manufacturers - Flushbolts:
1. Ives.
2. Substitutions:

2.07 EXIT DEVICES

A. Manufacturers - Exit Devices:
1. Von Duprin.
2. Substitutions:

2.08 CLOSERS

A. Closers: Complying with BHMA A156.4.
1. Provide surface-mounted, door-mounted closers unless otherwise indicated.
2. Provide a door closer on every exterior door.
3. On pairs of swinging doors, if an overlapping astragal is present, provide coordinator to ensure the leaves close in proper order.
4. At corridors, locate door-mounted closer on room side of door.
5. At outswinging exterior doors, mount closer in inside of door.

B. Manufacturers - Surface Mounted Closers:
1. DORMA USA, Inc; : www.dorma.com.
2. LCN.
3. Substitutions:

2.09 STOPS AND HOLDERS

A. Stops: Complying with BHMA A156.8; provide a stop for every swinging door, unless otherwise indicated.
1. Provide wall stops, unless otherwise indicated.
2. If wall stops are not practical, due to configuration of room or furnishings, provide overhead stop.
3. Stop is not required if positive stop feature is specified for door closer; positive stop feature of door closer is not an acceptable substitute for a stop unless specifically so stated.

B. Manufacturers - Wall and Floor Stops/Holders:
1. Ives.
2. Substitutions:

2.10 GASKETING AND THRESHOLDS

A. Gaskets: Complying with BHMA A156.22.

1. On each exterior door, provide weatherstripping gaskets, unless otherwise indicated; top, sides, and meeting stiles of pairs.
   a. Where exterior door is also required to have fire or smoke rating, provide gaskets functioning as both smoke and weather seals.
2. On each exterior door, provide door bottom sweep, unless otherwise indicated.

B. Thresholds: Complying with BHMA A156.21.
1. At each exterior door, provide a threshold unless otherwise indicated.

C. Manufacturers - Gasketing and Thresholds:
1. Zero.
2. Substitutions:

2.11 PROTECTION PLATES AND ARCHITECTURAL TRIM

A. Manufacturers - Protection Plates and Architectural Trim:
1. Ives.
2. Substitutions:

2.12 FIRE DEPARTMENT LOCK BOX

A. Fire Department Lock Box: Heavy-duty, , solid stainless-steel box with door and interior gasket seal; drill resistant lock with dust covers.
1. Capacity: Holdskeys.
2. Finish: Manufacturer's standard .
3. Manufacturers - Fire Department Lock Box:
   a. Knox Company; Knox-Box Rapid Entry System, 3200 Series: www.knoxbox.com.

PART 3 EXECUTION

3.01 INSTALLATION

A. Install hardware in accordance with manufacturer's instructions and applicable codes.

B. Use templates provided by hardware item manufacturer.

C. Mounting heights for hardware from finished floor to center line of hardware item.
1. For steel : Comply with DHI (LOCS) "Recommended Locations for Architectural Hardware for Standard Steel Doors and Frames".
2. For Wood Doors: Comply with DHI WDHS.3 "Recommended Locations for Architectural Hardware for Flush Wood Doors".

D. Set exterior door thresholds with full-width bead of elastomeric sealant on each point of contact with floor providing a continuous weather seal; anchor thresholds with stainless steel countersunk screws.

3.02 ADJUSTING

A. Adjust work under provisions of Section .

B. Adjust hardware for smooth operation.

C. Adjust gasketing for complete, continuous seal; replace if unable to make complete seal.

3.03 CLEANING

A. Clean adjacent surfaces soiled by hardware installation. Clean finished hardware per manufacturer's instructions after final adjustments has been made. Replace items that cannot be cleaned to manufacturer's level of finish quality at no additional cost.

3.04 SCHEDULE OF HARDWARE SETS .

END OF SECTION

3.04 SCHEDULE OF HARDWARE SETS .

HARDWARE GROUP NO. 01

139A

PROVIDE EACH SGL DOOR(S) WITH THE FOLLOWING:

QTY		DESCRIPTION	CATALOG NUMBER		FINISH	MFR
3	EA	HINGE	5BB1HW 4.5 X 4.5 NRP		630	IVE
1	EA	PANIC HARDWARE	CDSI-98-NL		626	VON
1	EA	RIM CYLINDER	20-057 ICX		626	SCH
1	EA	MORTISE CYLINDER	20-061 ICX X K510-730 36-083		626	SCH
2	EA	FINAL CORE	23-030 (CONFIRM KEYWAY WITH OWNER)		626	SCH
1	EA	SURFACE CLOSER	4111 EDA		689	LCN
1	EA	KICK PLATE	8400 10" X 2" LDW B-CS		630	IVE
1	EA	WALL STOP	WS406/407CVX		630	IVE
1	EA	GASKETING	188SBK PSA		BK	ZER
1	EA	DOOR SWEEP	8197AA		AA	ZER
1	EA	THRESHOLD	546A-223		A	ZER

HARDWARE GROUP NO. 02

139B

PROVIDE EACH PR DOOR(S) WITH THE FOLLOWING:

QTY		DESCRIPTION	CATALOG NUMBER		FINISH	MFR
6	EA	HINGE	5BB1HW 4.5 X 4.5 NRP		630	IVE
1	EA	KEY REMOVABLE MULLION	KR4954 STAB		689	VON
1	EA	PANIC HARDWARE	CDSI-98-NL		626	VON
1	EA	PANIC HARDWARE	LD-98-EO		626	VON
1	EA	RIM CYLINDER	20-057 ICX		626	SCH
2	EA	MORTISE CYLINDER	20-061 ICX X K510-730 36-083		626	SCH
3	EA	FINAL CORE	23-030 (CONFIRM KEYWAY WITH OWNER)		626	SCH
1	EA	SURFACE CLOSER	4111 EDA		689	LCN
1	EA	CLOSER W/STOP ARM	4111 SCUSH		689	LCN
2	EA	KICK PLATE	8400 10" X 2" LDW B-CS		630	IVE
1	EA	WALL STOP	WS406/407CVX		630	IVE
1	EA	GASKETING	188SBK PSA		BK	ZER
1	EA	MULLION SEAL	8780NBK PSA		BK	ZER
1	EA	MEETING ASTRAGAL	8194AA (ONE SET)		AA	ZER
2	EA	DOOR SWEEP	8197AA		AA	ZER
1	EA	THRESHOLD	546A-223		A	ZER

END OF SECTION

This page intentionally left blank

SECTION 08 8000
GLAZING

PART 1 GENERAL

1.01 SECTION INCLUDES

A. Insulating glass units.

B. Glazing for doors.

C. Glazing compounds and accessories.

1.02 RELATED REQUIREMENTS

A. Section 07 2500 - Weather Barriers.

B. Section 07 9200 - Joint Sealants.

C. Section 08 1113 - Hollow Metal Doors and Frames: Glazed lites in doors and borrowed lites.

D. Section 08 5113 - Aluminum Windows: Glazing provided by window manufacturer.

1.03 REFERENCE STANDARDS

A. 16 CFR 1201 - Safety Standard for Architectural Glazing Materials; Current Edition.

B. ANSI Z97.1 - American National Standard for Safety Glazing Materials Used in Buildings - Safety Performance Specifications and Methods of Test; 2015 (Reaffirmed 2020).

C. ASTM C864 - Standard Specification for Dense Elastomeric Compression Seal Gaskets, Setting Blocks, and Spacers; 2005 (Reapproved 2019).

D. ASTM C920 - Standard Specification for Elastomeric Joint Sealants; 2018.

E. ASTM C1036 - Standard Specification for Flat Glass; 2021.

F. ASTM C1048 - Standard Specification for Heat-Strengthened and Fully Tempered Flat Glass; 2018.

G. ASTM C1172 - Standard Specification for Laminated Architectural Flat Glass; 2019.

H. ASTM C1376 - Standard Specification for Pyrolytic and Vacuum Deposition Coatings on Flat Glass; 2021a.

I. ASTM E1300 - Standard Practice for Determining Load Resistance of Glass in Buildings; 2016.

J. ASTM E2190 - Standard Specification for Insulating Glass Unit Performance and Evaluation; 2019.

K. GANA (GM) - GANA Glazing Manual; 2022.

L. NFRC 100 - Procedure for Determining Fenestration Product U-factors; 2023.

M. NFRC 200 - Procedure for Determining Fenestration Product Solar Heat Gain Coefficient and Visible Transmittance at Normal Incidence; 2023.

N. NFRC 300 - Test Method for Determining the Solar Optical Properties of Glazing Materials and Systems; 2023.

1.04 ADMINISTRATIVE REQUIREMENTS

A. Preinstallation Meeting: Convene a preinstallation meeting one week before starting work of this section; require attendance by each of the affected installers.

1.05 SUBMITTALS

A. See Section 01 3000 - Administrative Requirements for submittal procedures.

B. Product Data on Insulating Glass Unit and Glazing Unit Glazing Types: Provide structural, physical and environmental characteristics, size limitations, special handling and installation requirements.

C. Product Data on Glazing Compounds and Accessories: Provide chemical, functional, and environmental characteristics, limitations, special application requirements, and identify available colors.

D. Samples: Submit two samples 6 by 6 inch in size of glass units.

E. Warranty Documentation: Submit manufacturer warranty and ensure that forms have been completed in Owner's name and registered with manufacturer.

F. Maintenance Materials: Furnish the following for Owner's use in maintenance of project.
   1. See Section 01 6000 - Product Requirements, for additional provisions.

1.06 QUALITY ASSURANCE

A. Manufacturer Qualifications: Company specializing in manufacturing the products specified in this section with minimum three years of documented experience.
   1. Provide certified glass products through ANSI accredited certifications that include plant audits and independent laboratory performance testing.
      a. Insulating Glass Certification Council (IGCC).
      b. Safety Glazing Certification Council (SGCC).

B. Installer Qualifications: Company specializing in performing work of the type specified and with at least three years documented experience.
   1. Provide company, field supervisors, and installers that hold active ANSI accredited certifications in appropriate categories for work specified.
      a. North American Contractor Certification (NACC) for glazing contractors.
      b. Equivalent independent third-party ANSI accredited certification.

C. Testing Agency Qualifications: Independent firm specializing in performing testing and inspections of the type specified in this section.

1.07 MOCK-UPS

A. Provide on-site glazing mock-up with the specified glazing components.

B. Locate where directed by Architect or as indicated on drawings.
   1. To component of Aluminum Window Mock-up.

C. Mock-ups may remain as part of the Work.

1.08 FIELD CONDITIONS

A. Do not install glazing when ambient temperature is less than 40 degrees F.

B. Maintain minimum ambient temperature before, during and 24 hours after installation of glazing compounds.

1.09 WARRANTY

A. See Section 01 7800 - Closeout Submittals for additional warranty requirements.

B. Insulating Glass Units: Provide a five (5) year manufacturer warranty to include coverage for seal failure, interpane dusting or misting, including providing products to replace failed units.

C. Laminated Glass: Provide a five (5) year manufacturer warranty to include coverage for delamination, including providing products to replace failed units.

PART 2 PRODUCTS

2.01 PERFORMANCE REQUIREMENTS - EXTERIOR GLAZING ASSEMBLIES

A. Provide type and thickness of exterior glazing assemblies to support assembly dead loads, and to withstand live loads caused by positive and negative wind pressure acting normal to plane of glass.
   1. Comply with ASTM E1300 for design load resistance of glass type, thickness, dimensions, and maximum lateral deflection of supported glass.
   2. Provide glass edge support system sufficiently stiff to limit the lateral deflection of supported glass edges to less than 1/175 of their lengths under specified design load.

3. Glass thicknesses listed are minimum.

B. Weather-Resistive Barrier Seals: Provide completed assemblies that maintain continuity of building enclosure water-resistive barrier, vapor retarder, and/or air barrier.
   1. In conjunction with weather barrier related materials described in other sections, as follows:
      a. Water-Resistive Barriers: See Section 07 2500.

C. Thermal and Optical Performance: Provide exterior glazing products with performance properties as indicated. Performance properties are in accordance with manufacturer's published data as determined with the following procedures and/or test methods:
   1. Center of Glass U-Value: Comply with NFRC 100 using Lawrence Berkeley National Laboratory (LBNL) WINDOW 6.3 computer program.
   2. Center of Glass Solar Heat Gain Coefficient (SHGC): Comply with NFRC 200 using Lawrence Berkeley National Laboratory (LBNL) WINDOW 6.3 computer program.
   3. Solar Optical Properties: Comply with NFRC 300 test method.

2.02 GLASS MATERIALS

A. Float Glass: Provide float glass based glazing unless otherwise indicated.
   1. Annealed Type: ASTM C1036, Type I - Transparent Flat, Class 1 - Clear, Quality - Q3.
   2. Kind HS - Heat-Strengthened Type: Complies with ASTM C1048.
   3. Kind FT - Fully Tempered Type: Complies with ASTM C1048.
   4. Impact Resistant Safety Glass: Complies with ANSI Z97.1 - Class B, or 16 CFR 1201 - Category II criteria.

B. Laminated Glass: Float glass laminated in accordance with ASTM C1172.
   1. Laminated Safety Glass: Complies with ANSI Z97.1 - Class B or 16 CFR 1201 - Category I impact test requirements.
   2. Polyvinyl Butyral (PVB) Interlayer: 0.030 inch thick, minimum.

2.03 INSULATING GLASS UNITS

A. Insulating Glass Units: Types as indicated.
   1. Durability: Certified by an independent testing agency to comply with ASTM E2190.
   2. Coated Glass: Comply with requirements of ASTM C1376 for pyrolytic (hard-coat) or magnetic sputter vapor deposition (soft-coat) type coatings on flat glass; coated vision glass, Kind CV; coated overhead glass, Kind CO; or coated spandrel glass, Kind CS.
   3. Spacer Color: Black.
   4. Edge Seal:
      a. Dual-Sealed System: Provide polyisobutylene sealant as primary seal applied between spacer and glass panes, and silicone, polysulfide, or polyurethane sealant as secondary seal applied around perimeter.
      b. Color: Black.
      c. *Basis of Design:*
         1) Vitro SolarBan 70 at South and West exposures.
         2) *Vitro SolarBan 60 at North and East exposure.*
   5. Purge interpane space with dry air, hermetically sealed.

B. Type IG-1 - Insulating Glass Units: Vision glass, double glazed.
   1. Basis of Design : Vitro, Solarban 70
   2. Applications: Exterior glazing at South and West exposures..
   3. Space between lites filled with air.
   4. Outboard Lite: Heat-strengthened float glass, 1/4 inch thick, minimum.
      a. Tint: Optigray.
      b. Coating: Low-E (passive type), on #2 surface.
      c. Basis of Design: Solarban 60 as manufactured by Vitro Architectural Glass.
   5. Inboard Lite: Annealed float glass, 1/4 inch thick, minimum.
      a. Tint: Clear.

6. Total Thickness: 1 inch.
7. Thermal Transmittance (U-Value), Winter - Center of Glass: 0.24, nominal.
8. Visible Light Transmittance (VLT): ***70*** percent, nominal.
9. Shading Coefficient: 0.45, nominal.
10. Solar Heat Gain Coefficient (SHGC): ***0.39, nominal***
11. Glazing Method: Dry glazing method, gasket glazing.

C. Type IG-2 - Insulating Glass Units: Vision glass, double glazed.
1. Basis of design: Vitro Solarban 60.
2. Applications: Exterior glazing at North and East exposures..
3. Space between lites filled with air.
4. Outboard Lite: Heat-strengthened float glass, 1/4 inch thick, minimum.
   a. Tint: Clear.
   b. Coating: Low-E (passive type), on #2 surface.
   c. Basis of Design: Vitro Solarban 60
5. Inboard Lite: Annealed float glass, 1/4 inch thick, minimum.
   a. Tint: Clear.
6. Total Thickness: 1 inch.
7. Thermal Transmittance (U-Value), Winter - Center of Glass: 0.24, nominal.
8. Visible Light Transmittance (VLT): 70 percent, nominal.
9. Solar Heat Gain Coefficient (SHGC): 0.39, nominal.

D. Type IG-3 - Insulating Glass Units: Safety glazing.
1. Applications:
   a. Glazing lites in exterior doors.
   b. Glazed sidelights and panels next to doors.
   c. Other locations required by applicable federal, state, and local codes and regulations.
2. Space between lites filled with argon.
3. Glass Type: Same as Type 1G-1 & IG-2 except use fully tempered float glass for both outboard and inboard lites.
4. Tint: Clear.
5. Total Thickness: 1 inch.
6. Thermal Transmittance (U-Value), Winter - Center of Glass: 0.24, nominal.
7. Visible Light Transmittance (VLT): 70 percent, nominal.
8. Solar Heat Gain Coefficient (SHGC): 0.39, nominal.
9. Glazing Method: Dry glazing method, gasket glazing.

2.04 ACCESSORIES

A. Setting Blocks: Silicone, with 80 to 90 Shore A durometer hardness; ASTM C864 Option II. Length of 0.1 inch for each square foot of glazing or minimum 4 inch by width of glazing rabbet space minus 1/16 inch by height to suit glazing method and pane weight and area.

B. Glazing Tape, Back Bedding Mastic Type: Preformed, butyl-based, 100 percent solids compound with integral resilient spacer rod applicable to application indicated; 5 to 30 cured Shore A durometer hardness; coiled on release paper; black color.

C. Glazing Splines: Resilient silicone extruded shape to suit glazing channel retaining slot; ASTM C864 Option II; color black.

PART 3 EXECUTION

3.01 VERIFICATION OF CONDITIONS

A. Verify that openings for glazing are correctly sized and within tolerances, including those for size, squareness, and offsets at corners.

B. Verify that surfaces of glazing channels or recesses are clean, free of obstructions that may impede moisture movement, weeps are clear, and support framing is ready to receive glazing system.

C. Verify that sealing between joints of glass framing members has been completed effectively.

D. Proceed with glazing system installation only after unsatisfactory conditions have been corrected.

3.02 PREPARATION

A. Clean contact surfaces with appropriate solvent and wipe dry within maximum of 24 hours before glazing. Remove coatings that are not tightly bonded to substrates.

B. Seal porous glazing channels or recesses with substrate compatible primer or sealer.

C. Prime surfaces scheduled to receive sealant where required for proper sealant adhesion.

3.03 INSTALLATION, GENERAL

A. Install glazing in compliance with written instructions of glass, gaskets, and other glazing material manufacturers, unless more stringent requirements are indicated, including those in glazing referenced standards.

B. Do not exceed edge pressures around perimeter of glass lites as stipulated by glass manufacturer.

C. Set glass lites of system with uniform pattern, draw, bow, and similar characteristics.

D. Set glass lites in proper orientation so that coatings face exterior or interior as indicated.

E. Prevent glass from contact with any contaminating substances that may be the result of construction operations such as, and not limited to the following; weld splatter, fire-saving, plastering, mortar droppings, and paint.

3.04 INSTALLATION - DRY GLAZING METHOD (GASKET GLAZING)

A. Application - Exterior and/or Interior Glazed: Set glazing infills from either the exterior or the interior of the building.

B. Place setting blocks at 1/4 points with edge block no more than 6 inch from corners.

C. Rest glazing on setting blocks and push against fixed stop with sufficient pressure on gasket to attain full contact.

D. Install removable stops without displacing glazing gasket; exert pressure for full continuous contact.

3.05 FIELD QUALITY CONTROL

A. See Section 01 4000 - Quality Requirements for additional requirements.

B. Glass and Glazing product manufacturers to provide field surveillance of the installation of their products.

C. Monitor and report installation procedures and unacceptable conditions.

3.06 CLEANING

A. See Section 01 7419 - Construction Waste Management and Disposal, for additional requirements.

B. Remove excess glazing materials from finish surfaces immediately after application using solvents or cleaners recommended by manufacturers.

C. Remove non-permanent labels immediately after glazing installation is complete.

D. Clean glass and adjacent surfaces after sealants are fully cured.

E. Clean glass on both exposed surfaces not more than 4 days prior to Date of Substantial Completion in accordance with glass manufacturer's written recommendations.

3.07 PROTECTION

A. After installation, mark pane with an 'X' by using removable plastic tape or paste; do not mark heat absorbing or reflective glass units.

B. Remove and replace glass that is damaged during construction period prior to Date of Substantial Completion.

END OF SECTION

SECTION 09 0561
COMMON WORK RESULTS FOR FLOORING PREPARATION

PART 1 GENERAL

1.01 SECTION INCLUDES

A. This section applies to floors identified in Contract Documents that are receiving the following types of floor coverings:
   1. Resilient tile and sheet.
   2. Carpet tile.

B. Removal of existing floor coverings.

C. Preparation of new and existing concrete floor slabs for installation of floor coverings.

D. Testing of concrete floor slabs for moisture and alkalinity (pH).

1.02 RELATED REQUIREMENTS

A. Section 03 3000 - Cast-in-Place Concrete: Moisture emission reducing curing and sealing compound for slabs to receive adhered flooring, to prevent moisture content-related flooring failures; to remain in place, not to be removed.

B. Section 03 3000 - Cast-in-Place Concrete: Concrete admixture for slabs to receive adhered flooring, to prevent moisture content-related flooring failures.

C. Section 03 3000 - Cast-in-Place Concrete: Limitations on curing requirements for new concrete floor slabs.

1.03 REFERENCE STANDARDS

A. ASTM F1869 - Standard Test Method for Measuring Moisture Vapor Emission Rate of Concrete Subfloor Using Anhydrous Calcium Chloride; 2022.

B. ASTM F2170 - Standard Test Method for Determining Relative Humidity in Concrete Floor Slabs Using in situ Probes; 2019a.

C. RFCI (RWP) - Recommended Work Practices for Removal of Resilient Floor Coverings; 2018.

1.04 SUBMITTALS

A. Visual Observation Report: For existing floor coverings to be removed.

B. Floor Covering and Adhesive Manufacturers' Product Literature: For each specific combination of substrate, floor covering, and adhesive to be used; showing:
   1. Moisture and alkalinity (pH) limits and test methods.
   2. Manufacturer's required bond/compatibility test procedure.

C. Testing Agency's Report:
   1. Description of areas tested; include floor plans and photographs if helpful.
   2. Summary of conditions encountered.
   3. Moisture and alkalinity (pH) test reports.
   4. Copies of specified test methods.
   5. Recommendations for remediation of unsatisfactory surfaces.
   6. Submit report not more than two business days after conclusion of testing.

D. Adhesive Bond and Compatibility Test Report.

1.05 QUALITY ASSURANCE

A. Testing Agency Qualifications: Independent testing agency experienced in the types of testing specified.
   1. Submit evidence of experience consisting of at least 3 test reports of the type required, with project Owner's project contact information.

1.06 FIELD CONDITIONS

A. Maintain ambient temperature in spaces where concrete testing is being performed, and for at least 48 hours prior to testing, at not less than 65 degrees F or more than 85 degrees F.

B. Maintain relative humidity in spaces where concrete testing is being performed, and for at least 48 hours prior to testing, at not less than 40 percent and not more than 60 percent.

PART 2 PRODUCTS

PART 3 EXECUTION

3.01 CONCRETE SLAB PREPARATION

A. Perform following operations in the order indicated:
   1. Existing concrete slabs (on-grade and elevated) with existing floor coverings:
      a. Visual observation of existing floor covering, for adhesion, water damage, alkaline deposits, and other defects.
      b. Removal of existing floor covering.
   2. Preliminary cleaning.
   3. Moisture vapor emission tests; 3 tests in the first 1000 square feet and one test in each additional 1000 square feet, unless otherwise indicated or required by flooring manufacturer.
   4. Internal relative humidity tests; in same locations as moisture vapor emission tests, unless otherwise indicated.
   5. Alkalinity (pH) tests; in same locations as moisture vapor emission tests, unless otherwise indicated.
   6. Specified remediation, if required.
   7. Patching, smoothing, and leveling, as required.
   8. Other preparation specified.
   9. Adhesive bond and compatibility test.
   10. Protection.

3.02 REMOVAL OF EXISTING FLOOR COVERINGS

A. Dispose of removed materials in accordance with local, State, and federal regulations and as specified.

3.03 PRELIMINARY CLEANING

A. Clean floors of dust, solvents, paint, wax, oil, grease, asphalt, residual adhesive, adhesive removers, film-forming curing compounds, sealing compounds, alkaline salts, excessive laitance, mold, mildew, and other materials that might prevent adhesive bond.

B. Do not use solvents or other chemicals for cleaning.

3.04 MOISTURE VAPOR EMISSION TESTING

A. Where the floor covering manufacturer's requirements conflict with either the referenced test method or this specification, comply with the manufacturer's requirements.

B. Where this specification conflicts with the referenced test method, comply with the requirements of this section.

C. Test in accordance with ASTM F1869 and as follows.

D. Plastic sheet test and mat bond test may not be substituted for the specified ASTM test method, as those methods do not quantify the moisture content sufficiently.

E. In the event that test values exceed floor covering manufacturer's limits, perform remediation as indicated. In the absence of manufacturer limits, perform remediation if test values exceed 3 pounds per 1000 square feet per 24 hours.

F. Report: Report the information required by the test method.

3.05 INTERNAL RELATIVE HUMIDITY TESTING

A. Where the floor covering manufacturer's requirements conflict with either the referenced test method or this specification, comply with the manufacturer's requirements.

B. Where this specification conflicts with the referenced test method, comply with the requirements of this section.

C. Test in accordance with ASTM F2170 Procedure A and as follows.

D. Testing with electrical impedance or resistance apparatus may not be substituted for the specified ASTM test method, as the values determined are not comparable to the ASTM test values and do not quantify the moisture content sufficiently.

E. In the event that test values exceed floor covering manufacturer's limits, perform remediation as indicated. In the absence of manufacturer limits, perform remediation if any test value exceeds 75 percent relative humidity.

F. Report: Report the information required by the test method.

3.06 ALKALINITY TESTING

A. Where the floor covering manufacturer's requirements conflict with either the referenced test method or this specification, comply with the manufacturer's requirements.

B. In the event that test values exceed floor covering manufacturer's limits, perform remediation as indicated. In the absence of manufacturer limits, perform remediation if alkalinity (pH) test value is over 10.

3.07 PREPARATION

A. See individual floor covering section(s) for additional requirements.

B. Comply with requirements and recommendations of floor covering manufacturer.

C. Fill and smooth surface cracks, grooves, depressions, control joints and other non-moving joints, and other irregularities with patching compound.

D. Do not fill expansion joints, isolation joints, or other moving joints.

3.08 ADHESIVE BOND AND COMPATIBILITY TESTING

A. Comply with requirements and recommendations of floor covering manufacturer.

END OF SECTION

This page intentionally left blank

SECTION 09 2116
GYPSUM BOARD ASSEMBLIES

PART 1 GENERAL

1.01 SECTION INCLUDES

A. Performance criteria for gypsum board assemblies.

B. Acoustic insulation.

C. Gypsum sheathing.

D. Gypsum wallboard.

E. Joint treatment and accessories.

1.02 RELATED REQUIREMENTS

A. Section 01 6116 - Volatile Organic Compound (VOC) Content Restrictions.

B. Section 06 1000 - Rough Carpentry: Wall, floor, and ceiling framing and sheathing.

C. Section 06 1000 - Rough Carpentry: Wood blocking product and execution requirements.

D. Section 07 2100 - Thermal Insulation: Exterior insulation

E. Section 07 8400 - Firestopping: Top-of-wall assemblies at fire-resistance-rated walls.

F. Section 07 9200 - Joint Sealants: Sealing acoustical gaps in construction other than gypsum board or plaster work.

1.03 REFERENCE STANDARDS

A. ANSI A108.11 - American National Standard Specifications for Interior Installation of Cementitious Backer Units; 2018.

B. ANSI A118.9 - American National Standard Specifications for Test Methods and Specifications for Cementitious Backer Units; 2019.

C. ASTM C475/C475M - Standard Specification for Joint Compound and Joint Tape for Finishing Gypsum Board; 2017 (Reapproved 2022).

D. ASTM C557 - Standard Specification for Adhesives for Fastening Gypsum Wallboard to Wood Framing; 2003 (Reapproved 2017).

E. ASTM C665 - Standard Specification for Mineral-Fiber Blanket Thermal Insulation for Light Frame Construction and Manufactured Housing; 2023.

F. ASTM C840 - Standard Specification for Application and Finishing of Gypsum Board; 2020.

G. ASTM C1002 - Standard Specification for Steel Self-Piercing Tapping Screws for Application of Gypsum Panel Products or Metal Plaster Bases to Wood Studs or Steel Studs; 2022.

H. ASTM C1047 - Standard Specification for Accessories for Gypsum Wallboard and Gypsum Veneer Base; 2019.

I. ASTM C1325 - Standard Specification for Fiber-Mat Reinforced Cementitious Backer Units; 2022.

J. ASTM C1396/C1396M - Standard Specification for Gypsum Board; 2017.

K. ASTM C1629/C1629M - Standard Classification for Abuse-Resistant Nondecorated Interior Gypsum Panel Products and Fiber-Reinforced Cement Panels; 2023.

L. ASTM C1658/C1658M - Standard Specification for Glass Mat Gypsum Panels; 2019, with Editorial Revision (2020).

M. ASTM D3273 - Standard Test Method for Resistance to Growth of Mold on the Surface of Interior Coatings in an Environmental Chamber; 2021.

N. ASTM E84 - Standard Test Method for Surface Burning Characteristics of Building Materials; 2023b.

O. ASTM E90 - Standard Test Method for Laboratory Measurement of Airborne Sound Transmission Loss of Building Partitions and Elements; 2009 (Reapproved 2016).

P. ASTM E413 - Classification for Rating Sound Insulation; 2022.

Q. ASTM G21 - Standard Practice for Determining Resistance of Synthetic Polymeric Materials to Fungi; 2015, with Editorial Revision (2021).

R. GA-216 - Application and Finishing of Gypsum Panel Products; 2021.

S. UL (FRD) - Fire Resistance Directory; Current Edition.

1.04 SUBMITTALS

A. See Section 01 3000 - Administrative Requirements for submittal procedures.

B. Shop Drawings: Indicate special details associated with control joints indicating exact locations on interior elevation drawings .

C. Product Data: Provide data on gypsum board, accessories, and joint finishing system.

1.05 QUALITY ASSURANCE

A. Installer Qualifications: Company specializing in performing gypsum board installation and finishing, with minimum 5 years of experience.

1.06 DELIVERY, STORAGE, AND HANDLING

A. See Section 01 7419 - Construction Waste Management and Disposal for packaging waste requirements.

B. Store gypsum products and accessories indoors and keep above freezing. Elevate boards above floor, on nonwicking supports, in accordance with manufacturer's recommendations.

PART 2 PRODUCTS

2.01 GYPSUM BOARD ASSEMBLIES

A. Provide completed assemblies complying with ASTM C840 and GA-216.

B. Interior Partitions, Indicated as Acoustic: Provide completed assemblies with the following characteristics:
   1. Acoustic Attenuation: STC of 45-49 calculated in accordance with ASTM E413, based on tests conducted in accordance with ASTM E90.

C. Fire-Resistance-Rated Assemblies: Provide completed assemblies complying with applicable code.

2.02 BOARD MATERIALS

A. Manufacturers - Gypsum-Based Board:
   1. CertainTeed Corporation: www.certainteed.com/#sle.
   2. National Gypsum Company: www.nationalgypsum.com/#sle.
   3. USG Corporation: www.usg.com/#sle.
   4. Sure-Board: sureboard.com.
   5. Substitutions: See Section 01 6000 - Product Requirements.

B. Gypsum Wallboard: Paper-faced gypsum panels as defined in ASTM C1396/C1396M; sizes to minimize joints in place; ends square cut.
   1. Application: Use for vertical surfaces and ceilings, unless otherwise indicated.
   2. Glass mat faced gypsum panels, as defined in ASTM C1658/C1658M, suitable for paint finish, of the same core type and thickness may be substituted for paper-faced board.
   3. Mold Resistance: Score of 10, when tested in accordance with ASTM D3273.
      a. Mold-resistant board is required whenever board is being installed before the building is enclosed and conditioned.
      b. Mold resistant board is required any potential damp or wet locations.
   4. At Assemblies Indicated with Fire-Resistance Rating: Use type required by indicated tested assembly; if no tested assembly is indicated, use Type X board, UL or WH listed.

5. Thickness:
   a. Vertical Surfaces: 5/8 inch.
      1) Field verify existing adjacent surface and match existing thickness.
   b. Ceilings: 5/8 inch.

C. Impact Resistant Wallboard:
1. Application:
   a. Vestibules and Corridors to 8'-0" above finish floor where exposed.
   b. Multipurpose Room #115, to 14'-0" above finish floor where exposed.
2. Surface Abrasion: Level 3, minimum, when tested in accordance with ASTM C1629/C1629M.
3. Indentation: Level 1, minimum, when tested in accordance with ASTM C1629/C1629M.
4. Soft Body Impact: Level 3, minimum, when tested in accordance with ASTM C1629/C1629M.
5. Hard Body Impact: Level 2, minimum, when tested in accordance with ASTM C1629/C1629M.
6. Mold Resistance: Score of 10, when tested in accordance with ASTM D3273.
7. Paper-Faced Type: Gypsum wallboard, as defined in ASTM C1396/C1396M.
8. Type: Fire-resistance-rated Type X, UL or WH listed.
9. Thickness: 5/8 inch.
10. Edges: Tapered.

D. Backing Board In Wet Areas:
1. Application: Surfaces in wet areas including toilet rooms and custodial closets.
2. ANSI Cement-Based Board: Non-gypsum-based; aggregated Portland cement panels with glass fiber mesh embedded in front and back surfaces complying with ANSI A118.9 or ASTM C1325.
   a. Thickness: 5/8 inch.

E. Ceiling Board: Special sag resistant gypsum ceiling board as defined in ASTM C1396/C1396M; sizes to minimize joints in place; ends square cut.
1. Application: Ceilings, unless otherwise indicated.
2. Thickness: 5/8 inch.
3. Edges: Tapered.

F. Structural Panel:
1. Sure-Board Series 200W Structural Panels:
   a. Thickness: As indicated on drawings.
   b. Tapered-edge Type X.
   c. Adhesive to steel sheet. steel sheet No. 22 gage /0.027 inch (0.686 mm) minimum base-metal thickness, complying with ASTM A 653 CS, Grade 33.
      1) G40 minimum hot- dipped galvanized coating conforming with ASTM A 924.
      2) Available width of 48"
2. Plywood panels: As specified in Section 06 10 00 or as indicated on drawings.

2.03 GYPSUM BOARD ACCESSORIES

A. Acoustic Insulation: ASTM C665; preformed glass fiber, friction fit type, unfaced. Thickness: full cavity depth, minimum 3-1/2 inch.

B. Sound Isolation Tape: Elastomeric foam tape for sound decoupling.
1. Surface Burning Characteristics: Provide assemblies with flame spread index of 75 or less and smoke developed index of 450 or less, when tested in accordance with ASTM E84.
2. Tape Thickness: 1/4 inch.

C. Acoustic Sealant: Acrylic emulsion latex or water-based elastomeric sealant; do not use solvent-based non-curing butyl sealant.

D. Beads, Joint Accessories, and Other Trim: ASTM C1047, rigid plastic, galvanized steel, or rolled zinc, unless noted otherwise.
   1. Corner Beads: Low profile, for 90 degree outside corners.
   2. Expansion Joints:
      a. Type: V-shaped PVC with tear away fins.

E. Joint Materials: ASTM C475/C475M and as recommended by gypsum board manufacturer for project conditions.
   1. Fiberglass Tape: 2 inch wide, coated glass fiber tape for joints and corners, except as otherwise indicated.
   2. Paper Tape: 2 inch wide, creased paper tape for joints and corners, except as otherwise indicated.
   3. Joint Compound: Drying type, vinyl-based, ready-mixed.

F. Screws for Fastening of Gypsum Panel Products to Cold-Formed Steel Studs Less than 0.033 inches in Thickness and Wood Members: ASTM C1002; self-piercing tapping screws, corrosion-resistant.

PART 3 EXECUTION

3.01 EXAMINATION

A. Verify that project conditions are appropriate for work of this section to commence.

3.02 FRAMING INSTALLATION

A. Suspended Ceilings and Soffits: Space framing and furring members as indicated.
   1. Level ceiling system to a tolerance of 1/1200.
   2. Laterally brace entire suspension system.
   3. Install bracing as required at exterior locations to resist wind uplift.

B. Studs: Space studs at 16 inches on center.
   1. Extend partition framing to structure where indicated and to ceiling in other locations.
   2. Partitions Terminating at Ceiling: Attach ceiling runner securely to ceiling track in accordance with manufacturer's instructions.
   3. Partitions Terminating at Structure: Attach extended leg top runner to structure, maintain clearance between top of studs and structure, and brace both flanges of studs with continuous bridging.

C. Openings: Reinforce openings as required for weight of doors or operable panels, using not less than double studs at jambs.

D. Blocking: Install wood blocking for support of:
   1. Framed openings.
   2. Plumbing fixtures.
   3. Toilet accessories.
   4. Wall-mounted door hardware.
   5. Handrails
   6. Wall mounted equipment.

3.03 ACOUSTIC ACCESSORIES INSTALLATION

A. Acoustic Insulation: Place tightly within spaces, around cut openings, behind and around electrical and mechanical items within partitions, and tight to items passing through partitions.

B. Sound Isolation Tape: Apply to vertical studs and top and bottom tracks/runners in accordance with manufacturer's instructions.

C. Acoustic Sealant: Install in accordance with manufacturer's instructions.
   1. Place one bead continuously on substrate before installation of perimeter framing members.
   2. Place continuous bead at perimeter of each layer of gypsum board.
   3. Seal around all penetrations by conduit, pipe, ducts, and rough-in boxes, except where firestopping is provided.

3.04 BOARD INSTALLATION

A. Comply with ASTM C840, GA-216, and manufacturer's instructions. Install to minimize butt end joints, especially in highly visible locations.

B. Single-Layer Nonrated: Install gypsum board in most economical direction, with ends and edges occurring over firm bearing.
   1. Exception: Tapered edges to receive joint treatment at right angles to framing.

C. Fire-Resistance-Rated Construction: Install gypsum board in strict compliance with requirements of assembly listing.

D. Exposed Gypsum Board in Interior Wet Areas: Seal joints, cut edges, and holes with water-resistant sealant.

E. Cementitious Backing Board: Install over wood framing members where indicated, in accordance with ANSI A108/A118/A136.1 and manufacturer's instructions.

F. Installation on Wood Framing: For non-rated assemblies, install as follows:
   1. Single-Layer Applications: Screw attachment.
   2. Double-Layer Application: Install base layer using screws or nails. Install face layer using adhesive.

3.05 INSTALLATION OF TRIM AND ACCESSORIES

A. Control Joints: Place control joints consistent with lines of building spaces and as follows:
   1. Not more than 30 feet apart on walls and ceilings over 50 feet long.

B. Corner Beads: Install at external corners, using longest practical lengths.

C. Edge Trim: Install at locations where gypsum board abuts dissimilar materials.

3.06 JOINT TREATMENT

A. Glass Mat Faced Gypsum Board and Exterior Glass Mat Faced Sheathing: Use fiberglass joint tape, embed and finish with setting type joint compound.

B. Paper Faced Gypsum Board: Use fiberglass joint tape, embed with drying type joint compound and finish with drying type joint compound.

C. Finish gypsum board in accordance with levels defined in ASTM C840, as follows:
   1. Level 5: Walls and ceilings to receive semi-gloss or gloss paint finish and other areas specifically indicated.
   2. Level 4: Walls and ceilings to receive paint finish or wall coverings, unless otherwise indicated.
   3. Level 3: Walls to receive textured wall finish.
   4. Level 2: In utility areas such as electrical rooms, mechancial and custodial rooms, behind cabinetry.
   5. Level 1: Fire-resistance-rated wall areas above finished ceilings, whether or not accessible in the completed construction.

D. Tape, fill, and sand exposed joints, edges, and corners to produce smooth surface ready to receive finishes.
   1. Feather coats of joint compound so that camber is maximum 1/32 inch.
   2. Taping, filling, and sanding are not required at surfaces behind adhesive applied ceramic tile and fixed cabinetry.

E. Where Level 5 finish is indicated, spray apply high build drywall surfacer over entire surface after joints have been properly treated; achieve a flat and tool mark-free finish.

F. Fill and finish joints and corners of cementitious backing board as recommended by manufacturer.

3.07 TOLERANCES

A. Maximum Variation of Finished Gypsum Board Surface from True Flatness: 1/8 inch in 10 feet in any direction.

3.08 CLEANING

A. See Section 01 7000 - Execution and Closeout Requirements for additional requirements.

3.09 PROTECTION

A. Protect installed gypsum board assemblies from subsequent construction operations.

END OF SECTION

SECTION 09 5153
DIRECT-APPLIED ACOUSTICAL CEILING TILE

PART 1 GENERAL

1.01 SECTION INCLUDES

A. Acoustic Ceiling Tiles.

1.02 RELATED REQUIREMENTS

A. Section 01 6116 - Volatile Organic Compound (VOC) Content Restrictions.

1.03 REFERENCE STANDARDS

A. ASTM C423 - Standard Test Method for Sound Absorption and Sound Absorption Coefficients by the Reverberation Room Method; 2023.

B. ASTM E795 - Standard Practices for Mounting Test Specimens During Sound Absorption Tests; 2023.

C. ASTM E84 - Standard Test Method for Surface Burning Characteristics of Building Materials; 2023b.

D. ASTM E1264 - Standard Classification for Acoustical Ceiling Products; 2023.

1.04 ADMINISTRATIVE REQUIREMENTS

A. Sequence work to ensure acoustic ceilings are not installed until building is enclosed, sufficient heat is provided, dust generating activities have terminated, and overhead work is completed, tested, and approved.

B. Install acoustic units after interior wet work is dry.

1.05 SUBMITTALS

A. See Section 01 3000 - Administrative Requirements, for submittal procedures.

B. Product Data: Provide data on acoustic units and attachment method.

C. Shop Drawings: Indicate tile layout and related junctions with other work or ceiling finishes, interrelation of mechanical and electrical items related to system.

D. Samples: Submit two samples, 4 by 4 inch in size, illustrating material and finish of acoustic units.

1.06 FIELD CONDITIONS

A. Maintain uniform temperature of minimum 60 degrees F, and maximum humidity of 40 percent prior to, during, and after installation.

PART 2 PRODUCTS

2.01 MANUFACTURERS

A. Direct Applied Acoustical Ceilings:
   1. Silent Source; www.silentsource.com; (413) 584-7944
   2. Armstrong World Industries, Inc: www.armstrong.com/#sle.
   3. CertainTeed Corporation: www.certainteed.com/#sle.
   4. TECHLITE: www.techlite.com/#sle.
   5. USG: www.usg.com/#sle.
   6. Substitutions: See Section 01 6000 - Product Requirements.

2.02 MATERIALS

A. Acoustic Tile [ACT-1]: Mineral fiber, ASTM E1264
   1. Basis of Design: Armstrong, Fine Fissured Tile
   2. Size: 12 by 12 inches.
   3. Thickness: 1/2 inch. Field verify to match thickness of existing acoustical ceiling tiles.

4. Noise Reduction Coefficient (NRC): [0.45-0.55] when tested in accordance with ASTM C423 for Type [direct-attached adhered] mounting, per ASTM E795.
5. Surface Burning Characteristics: Class A: ASTM E84 and CAN/ULC S102; Flame spread index of [0-25], smoke developed index of [50 or less].
6. Joint: Tongue-and-Groove
7. Edge: Square
8. Surface Color: White
9. Surface Finish: Non-Directional fissured.

B. Adhesive: Waterproof, gun grade; type recommended by tile manufacturer.

PART 3 EXECUTION

3.01 EXAMINATION

A. Verify existing conditions and substrate flatness before starting work.

3.02 INSTALLATION

A. Install system in accordance with manufacturer's instructions.

B. Locate tile on room axis according to reflected plan or existing conditions.

C. Fit acoustic units in place, free from damaged edges or other defects detrimental to appearance and function.

D. Install acoustic units level in uniform plane.

END OF SECTION

SECTION 09 6500
RESILIENT FLOORING

PART 1 GENERAL

1.01 SECTION INCLUDES

A. Resilient sheet flooring.

B. Resilient tile flooring.

C. Resilient base.

D. Installation accessories.

1.02 RELATED REQUIREMENTS

A. Section 01 6116 - Volatile Organic Compound (VOC) Content Restrictions.

B. Section 03 3000 - Cast-in-Place Concrete: Restrictions on curing compounds for concrete slabs and floors to receive adhesive-applied resilient flooring.

C. Section 09 0561 - Common Work Results for Flooring Preparation: Removal of existing floor coverings, cleaning, and preparation.

D. Section 09 0561 - Common Work Results for Flooring Preparation: Concrete slab moisture and alkalinity testing and remediation procedures.

1.03 REFERENCE STANDARDS

A. ASTM F710 - Standard Practice for Preparing Concrete Floors to Receive Resilient Flooring; 2022.

B. ASTM F1066 - Standard Specification for Vinyl Composition Floor Tile; 2004 (Reapproved 2018).

C. ASTM F1861 - Standard Specification for Resilient Wall Base; 2021.

D. ASTM F2034 - Standard Specification for Sheet Linoleum Floor Covering; 2018.

E. ASTM F2195 - Standard Specification for Linoleum Floor Tile; 2018 (Reapproved 2023).

F. RFCI (Resilient Floor Covering Institute) - FloorScore certification

1.04 SUBMITTALS

A. See Section 01 3000 - Administrative Requirements, for submittal procedures.

B. Product Data: Provide data on specified products, describing physical and performance characteristics; including sizes, patterns and colors available; and installation instructions.

C. Evidence of Floorscore certification for products and compliance with VOC levels for adhesives.

D. Verification Samples: Submit two samples, 4 by 4 inch in size illustrating color and pattern for each resilient flooring product specified.

E. Concrete Subfloor Test Report: Submit a copy of the moisture and alkalinity (pH) test reports.

F. Certification: Prior to installation of flooring, submit written certification by flooring manufacturer and adhesive manufacturer that condition of subfloor is acceptable.

G. Maintenance Data: Include maintenance procedures, recommended maintenance materials, and suggested schedule for cleaning, stripping, and re-waxing.

H. Maintenance Materials: Furnish the following for Owner's use in maintenance of project.
   1. See Section 01 6000 - Product Requirements, for additional provisions.
   2. Extra Flooring Material: 100 square feet of each type and color.

1.05 QUALITY ASSURANCE

A. Installer Qualifications: Company specializing in installing specified flooring with minimum three years documented experience.

1.06 DELIVERY, STORAGE, AND HANDLING

A. Upon receipt, immediately remove any shrink-wrap and check materials for damage and the correct style, color, quantity and run numbers.

B. Store all materials off of the floor in an acclimatized, weather-tight space.

C. Maintain temperature in storage area between 55 degrees F and 90 degrees F.

D. Protect roll materials from damage by storing on end.

E. Do not double stack pallets.

1.07 FIELD CONDITIONS

A. Store materials for not less than 48 hours prior to installation in area of installation at a temperature of 70 degrees F to achieve temperature stability. Thereafter, maintain conditions above 55 degrees F.

PART 2 PRODUCTS

2.01 SHEET FLOORING

A. Linoleum Sheet Flooring: Homogeneous wear layer bonded to backing, with color and pattern through wear layer thickness.
   1. Manufacturers:
      a. Forbo Flooring, Inc; Marmoleum: www.forboflooringna.com/#sle.
      b. Substitutions: See Section 01 6000 - Product Requirements.
   2. Minimum Requirements: Comply with ASTM F2034, Type corresponding to type specified.
   3. Backing: Jute fabric.
   4. Thickness: 0.100 inch, minimum, excluding backing.
   5. Sheet Width: 79 inch, minimum.
   6. Seams: Heat welded.
   7. Integral coved base with cap strip.
   8. Pattern: Marbleized.
   9. Color: To be selected from standard colors.

B. Welding Rod: Solid bead in material compatible with flooring, produced by flooring manufacturer for heat welding seams, and in color matching field color.

2.02 TILE FLOORING

A. Vinyl Composition Tile- Type VCT-1 and VCT-2: Homogeneous, with color extending throughout thickness.
   1. Manufacturers and products:
      a. Armstrong Flooring, Inc; Standard Execelon Imperial Texture: www.armstrongflooring.com/#sle.
      b. Johnsonite, a Tarkett Company; VCT II: www.johnsonite.com/#sle.
      c. Substitutions: See Section 01 6000 - Product Requirements.
   2. Minimum Requirements: Comply with ASTM F1066, of Class corresponding to type specified.
   3. Comply with ASTM F1700, Class III.
   4. Size: 12 by 12 inch.
   5. Color: To be selected by Architect from manufacturer's full range.

2.03 RESILIENT BASE

A. Resilient Base: ASTM F1861, Type TS rubber, vulcanized thermoset; top set Style B, Cove.
   1. Manufacturers:
      a. Johnsonite, a Tarkett Company; Baseworks: www.johnsonite.com/#sle.
      b. Roppe Corporation: www.roppe.com/#sle.
      c. Substitutions: See Section 01 6000 - Product Requirements.
   2. Height Type RB-1: 4 inch.

3. Height Type RB-2: 6 inch.
4. Thickness: 0.125 inch.
5. Finish: Satin.
6. Length: Roll.
7. Color: To be selected by Architect from manufacturer's full range.

2.04 ACCESSORIES

A. Subfloor Filler: White premix latex; type recommended by adhesive material manufacturer.

B. Primers, Adhesives, and Seam Sealer: Waterproof; types recommended by flooring manufacturer.
   1. VOC Limits: less than 50 grams/Liter.

C. Moldings, Transition and Edge Strips: As indicated on drawings..

D. Prefabricated Coved Base: Bonded Aluminum Reinforcing Backer.
   1. Manufacturers:
      a. Roppe Corporation; Flashcove Puncture-Proof Reinforced Bases: www.roppe.com/#sle.
      b. Substitutions: Section 01 6000 - Product Requirements.

E. Sound Control Underlayment: Membrane consisting of cork granules and ground ethylene vinyl acetate (EVA) with polyurethane binder.
   1. Manufacturers:
      a. Proflex Products, Inc; LV-100 Sound Control Underlayment: www.proflex.us/#sle.
   2. Thickness: 0.08 inch.

PART 3 EXECUTION

3.01 EXAMINATION

A. Verify that surfaces are flat to tolerances acceptable to flooring manufacturer, free of cracks that might telegraph through flooring, clean, dry, and free of curing compounds, surface hardeners, and other chemicals that might interfere with bonding of flooring to substrate.

B. Verify that wall surfaces are smooth and flat within the tolerances specified for that type of work, are dust-free, and are ready to receive resilient base.

C. Cementitious Subfloor Surfaces: Verify that substrates are ready for resilient flooring installation by testing for moisture and alkalinity (pH).
   1. Conduct tests by an independent testing agency acceptable to Owner.
   2. Obtain instructions if test results are not within limits recommended by resilient flooring manufacturer and adhesive materials manufacturer.

D. Verify that concrete sub-floor surfaces are dry enough and ready for resilient flooring installation by testing for moisture emission rate and alkalinity in accordance with ASTM F710; obtain instructions if test results are not within limits recommended by resilient flooring manufacturer and adhesive materials manufacturer.

3.02 PREPARATION

A. Prepare floor substrates as recommended by flooring and adhesive manufacturers.

B. Remove subfloor ridges and bumps. Fill minor low spots, cracks, joints, holes, and other defects with subfloor filler to achieve smooth, flat, hard surface.

C. Prohibit traffic until filler is fully cured.

D. Clean substrate.

3.03 INSTALLATION - GENERAL

A. Starting installation constitutes acceptance of subfloor conditions.

B. Install in accordance with manufacturer's written instructions.

C. Where type of floor finish, pattern, or color are different on opposite sides of door, terminate flooring under centerline of door.

D. Install edge strips at unprotected or exposed edges, where flooring terminates, and where indicated.
   1. Metal Strips: Attach to substrate before installation of flooring using stainless steel screws.

3.04 INSTALLATION - SOUND CONTROL UNDERLAYMENT

A. Install in accordance with underlayment manufacturer's instructions.

3.05 INSTALLATION - SHEET FLOORING

A. Lay flooring with joints and seams parallel to longer room dimensions, to produce minimum number of seams. Lay out seams to avoid widths less than 1/3 of roll width; match patterns at seams.

B. Cut sheet at seams in accordance with manufacturer's instructions.

C. Seal seams by heat welding where indicated.

3.06 INSTALLATION - TILE FLOORING

A. Mix tile from container to ensure shade variations are consistent when tile is placed, unless otherwise indicated in manufacturer's installation instructions.

B. Lay flooring with joints and seams parallel to building lines to produce symmetrical pattern.

3.07 INSTALLATION - RESILIENT BASE

A. Fit joints tightly and make vertical. Maintain minimum dimension of 18 inches between joints.

B. Miter internal corners. At external corners, use premolded units. At exposed ends, use premolded units.

C. Install base on solid backing. Bond tightly to wall and floor surfaces.

D. Scribe and fit to door frames and other interruptions.

3.08 CLEANING

A. Remove excess adhesive from floor, base, and wall surfaces without damage.

B. Clean in accordance with manufacturer's written instructions.

3.09 PROTECTION

A. Prohibit traffic on resilient flooring for 48 hours after installation.

END OF SECTION

SECTION 09 8430
SOUND-ABSORBING WALL AND CEILING UNITS

PART 1 GENERAL

1.01 SECTION INCLUDES

A. Sound-absorbing panels.

1.02 REFERENCE STANDARDS

A. ASTM C423 - Standard Test Method for Sound Absorption and Sound Absorption Coefficients by the Reverberation Room Method; 2023.

B. ASTM E84 - Standard Test Method for Surface Burning Characteristics of Building Materials; 2023b.

1.03 SUBMITTALS

A. See Section 01 3000 - Administrative Requirements, for submittal procedures.

B. Product Data: Manufacturer's printed data sheets for products specified.

C. Shop Drawings: Fabrication and installation details, panel layout, and fabric orientation.

D. Verification Samples: For each finish product specified, tow samples, minimum size ; 4" x 4" inch, showing construction, edge details, and fabric covering.

1.04 DELIVERY, STORAGE, AND HANDLING

A. Protect acoustical units from moisture during shipment, storage, and handling. Deliver in factory-wrapped bundles; do not open bundles until units are needed for installation.

B. Store units flat, in dry, well-ventilated space; do not stand on end.

C. Protect edges from damage.

PART 2 PRODUCTS

2.01 PLASTIC SOUND-ABSORBING UNITS

A. Manufacturers:
   1. FSorb; www.fsorb.com.
   2. Substitutions: See Section 01 6000 - Product Requirements.

B. Thermally bonded (heat pressed) high density, polyester acoustic panels
   1. Surface Burning Characteristics: Flame spread index of 25 or less and smoke developed index of 450 or less, when tested in accordance with ASTM E84.
   2. Unfaced monolithic panel.
   3. Thickness: 1 inches.
   4. Panel Size: 48 inches by 96 inches and as noted on drawings.
   5. Color: Architect to select color from manufacturer's available color options.
   6. Sound Absorption: Noise Reduction Coefficient (NRC) of 0.70 when tested in accordance with ASTMC423 for Type A mounting.

PART 3 EXECUTION

3.01 EXAMINATION

A. Examine substrates for conditions detrimental to installation of acoustical units. Proceed with installation only after unsatisfactory conditions have been corrected.

3.02 PREPARATION

A. Clean surfaces thoroughly.

B. Prepare surfaces using the methods recommended by the manufacturer for achieving the best result for the substrate under the project conditions.

3.03 INSTALLATION

A. Align panels accurately, with edges plumb and top edges level. Scribe to fit accurately at adjoining work and penetrations.

B. Install acoustical units to construction tolerances of plus or minus 1/8 inch for the following:
   1. Plumb and level.
   2. Flatness.
   3. Width of joints.

3.04 CLEANING

A. Clean fabric facing upon completion of installation from dust and other foreign materials, following manufacturer's instructions.

3.05 PROTECTION

A. Provide protection of installed acoustical panels until Date of Substantial Completion.

B. Replace panels that cannot be cleaned and repaired to satisfaction of the Architect.

END OF SECTION

SECTION 09 9113
EXTERIOR PAINTING

PART 1 GENERAL

1.01 SECTION INCLUDES

A. Surface preparation.

B. Field application of paints.

C. Scope: Finish exterior surfaces exposed to view, unless fully factory-finished and unless otherwise indicated, including the following:
   1. Both sides and edges of plywood backboards for electrical and telecom equipment before installing equipment.
   2. Exposed surfaces of steel lintels and ledge angles.
   3. Mechanical and Electrical:
      a. On the roof and outdoors, paint equipment exposed to weather or to view, including factory-finished materials.

D. Do Not Paint or Finish the Following Items:
   1. Items factory-finished unless otherwise indicated; materials and products having factory-applied primers are not considered factory finished.
   2. Items indicated to receive other finishes.
   3. Items indicated to remain unfinished.
   4. Fire rating labels, equipment serial number and capacity labels, and operating parts of equipment.
   5. Stainless steel, anodized aluminum, bronze, terne-coated stainless steel, zinc, and lead.
   6. Floors, unless specifically indicated.
   7. Brick, glass unit masonry, architectural concrete, cast stone, integrally colored plaster and stucco.
   8. Glass.
   9. Concealed pipes, ducts, and conduits.

1.02 RELATED REQUIREMENTS

A. Section 01 6116 - Volatile Organic Compound (VOC) Content Restrictions.

B. Section 05 5000 - Metal Fabrications: Shop-primed items.

C. Section 07 4646 - Fiber Cement Siding

D. Section 08 1113 - Hollow Metal Doors and Frames

E. Section 09 9123 - Interior Painting.

1.03 DEFINITIONS

A. Comply with ASTM D16 for interpretation of terms used in this section.

B. Specular Gloss: Ranges determined per Master Painters Institute (MPI). Sheen is specified to establish required gloss range.

	Sheen	Geometry/Deg.	Gloss Range	MPI Gloss Level
1.	Flat	60	Below 5	1
2.	Flat, light sheen	60	Max 10	2
3.	Eggshell	60	10 to 25	3
4.	Satin	60	20 to 35	4
5.	Semi-Gloss	60	35 to 70	5
6.	Gloss	60	70 to 85	6

C. Finish (i.e. gloss level) of all painted surfaces shall be as specified herein or as noted on Finish Schedule.

1.04 REFERENCE STANDARDS

A. ASTM D16 - Standard Terminology for Paint, Related Coatings, Materials, and Applications; 2019.

B. ASTM D4258 - Standard Practice for Surface Cleaning Concrete for Coating; 2023.

C. ASTM D4442 - Standard Test Methods for Direct Moisture Content Measurement of Wood and Wood-Based Materials; 2020.

D. MPI (APL) - Master Painters Institute Approved Products List; Master Painters and Decorators Association; Current Edition.

E. MPI (APSM) - Master Painters Institute Architectural Painting Specification Manual; Current Edition.

F. SSPC-SP 1 - Solvent Cleaning; 2015, with Editorial Revision (2016).

G. SSPC-SP 2 - Hand Tool Cleaning; 2018.

H. SSPC-SP 6/NACE No.3 - Commercial Blast Cleaning; 2006.

1.05 SUBMITTALS

A. See Section 01 3000 - Administrative Requirements, for submittal procedures.

B. Product Data: Provide complete list of products to be used, with the following information for each:
   1. Manufacturer's name, product name and/or catalog number, and general product category (e.g. "alkyd enamel").
   2. MPI product number (e.g. MPI #47).
   3. Cross-reference to specified paint system(s) product is to be used in; include description of each system.
   4. Manufacturer's installation instructions.

C. Samples: Submit three paper "draw down" samples, 8-1/2 by 11 inches in size, illustrating range of colors available for each finishing product specified.
   1. Where sheen is specified, submit samples in only that sheen.
   2. Where sheen is not specified, discuss sheen options with Architect before preparing samples, to eliminate sheens not required.
   3. Allow a minimum of 10 business days for approval process, after receipt of complete samples by Architect.

D. Certification: By manufacturer that paints and finishes comply with VOC limits specified.

E. Manufacturer's Instructions: Indicate special surface preparation procedures.

F. Maintenance Data: Submit data including product technical data sheets, care and cleaning instructions, touch-up procedures, and repair of painted and finished surfaces.

G. Maintenance Materials: Furnish the following for Owner's use in maintenance of project.
   1. See Section 01 6000 - Product Requirements, for additional provisions.
   2. Extra Paint and Finish Materials: Two gallons of each color; from the same product run, store where directed.
   3. CLEARLY label each container with color in addition to the manufacturer's label.

1.06 QUALITY ASSURANCE

A. Coats: Number of coats specified is minimum number acceptable, if full coverage is not obtained with specified number of coats, apply such additional coats necessary to produce required finish.

1.07 DELIVERY, STORAGE, AND HANDLING

A. Deliver products to site in sealed and labeled containers; inspect to verify acceptability.

B. Container Label: Include manufacturer's name, type of paint, brand name, lot number, brand code, coverage, surface preparation, drying time, cleanup requirements, color designation, and instructions for mixing and reducing.

C. Paint Materials: Store at minimum ambient temperature of 45 degrees F and a maximum of 90 degrees F, in ventilated area, and as required by manufacturer's instructions.

1.08 FIELD CONDITIONS

A. Do not apply materials when surface and ambient temperatures are outside the paint product manufacturer's temperature ranges.

B. Follow manufacturer's recommended procedures for producing best results, including testing of substrates, moisture in substrates, and humidity and temperature limitations.

C. Do not apply exterior paint and finishes during rain or snow, or when relative humidity is outside the humidity ranges required by the paint product manufacturer.

D. Minimum Application Temperatures for Latex Paints: 50 degrees F for exterior; unless required otherwise by manufacturer's instructions.

E. Provide lighting level of 80 ft candles measured mid-height at substrate surface.

PART 2 PRODUCTS

2.01 MANUFACTURERS

A. Paints:
   1. Sherwin-Williams Company: www.sherwin-williams.com/#sle.

B. Primer Sealers: Same manufacturer as top coats.

C. Substitutions: See Section 01 6000 - Product Requirements.

2.02 PAINTS AND FINISHES - GENERAL

A. Paints and Finishes: Ready-mixed, unless required to be a field-catalyzed paint.
   1. Where MPI paint numbers are specified, provide products listed in Master Painters Institute Approved Product List, current edition available at www.paintinfo.com, for specified MPI categories, except as otherwise indicated.
   2. Provide paints and finishes of a soft paste consistency, capable of being readily and uniformly dispersed to a homogeneous coating, with good flow and brushing properties, and capable of drying or curing free of streaks or sags.
   3. Provide materials that are compatible with one another and the substrates indicated under conditions of service and application, as demonstrated by manufacturer based on testing and field experience.
   4. Supply each paint material in quantity required to complete entire project's work from a single production run.
   5. Do not reduce, thin, or dilute paint or finishes or add materials unless such procedure is described explicitly in manufacturer's product instructions.

B. Volatile Organic Compound (VOC) Content: Comply with Section 01 6116.

C. Sheens: Provide the sheens specified; where sheen is not specified, sheen will be selected later by Architect from the manufacturer's full line.

2.03 PAINT SYSTEMS - EXTERIOR

A. Paint E-OP - Exterior Surfaces to be Painted, Unless Otherwise Indicated: Including concrete, fiber cement siding, primed wood, and primed metal.
   1. Two top coats and one coat primer.
   2. Top Coat(s): Exterior Alkyd Enamel; MPI #9, 81, 94 or 96..
   3. Top Coat Sheen:
      a. Semi-Gloss: MPI gloss level 5; use this sheen at all locations.
   4. Primer: As specified under "PRIMERS" below.

2.04 PRIMERS

A. Primers: Provide the following unless other primer is required or recommended by manufacturer of top coats and compliant with VOC requirements.

1. Alkali-Resistant Water-Based Primer; MPI #3.
   a. Products:
      1) Sherwin-Williams Loxon Water Blocking Primer/Finish.
      2) Substitutions: See Section 01 6000 - Product Requirements
2. Anti-Corrosive Alkyd Primer for Metal; MPI #79.
3. Water Based Primer for Galvanized Metal; MPI #134.
4. Latex Primer for Exterior Wood; MPI #6.
   a. Products:
      1) Sherwin-Williams Exterior Latex Primer, B42W8041. (MPI #6)
      2) Substitutions: See Section 01 6000 - Product Requirements

2.05 ACCESSORY MATERIALS

A. Accessory Materials: Provide primers, sealers, cleaning agents, cleaning cloths, sanding materials, and clean-up materials as required for final completion of painted surfaces.

B. Patching Material: Latex filler.

C. Fastener Head Cover Material: Latex filler.

PART 3 EXECUTION

3.01 EXAMINATION

A. Verify that surfaces are ready to receive work as instructed by the product manufacturer.

B. Examine surfaces scheduled to be finished prior to commencement of work. Report any condition that may potentially affect proper application.

C. Test shop-applied primer for compatibility with subsequent cover materials.

D. Measure moisture content of surfaces using an electronic moisture meter. Do not apply finishes unless moisture content of surfaces are below the following maximums:
   1. Fiber Cement Siding: 12 percent.
   2. Masonry, Concrete, and Concrete Masonry Units: 12 percent.
   3. Exterior Wood: 15 percent, measured in accordance with ASTM D4442.

3.02 PREPARATION

A. Clean surfaces thoroughly and correct defects prior to application.

B. Prepare surfaces using the methods recommended by the manufacturer for achieving the best result for the substrate under the project conditions.

C. Remove or repair existing paints or finishes that exhibit surface defects.

D. Remove or mask surface appurtenances, including electrical plates, hardware, light fixture trim, escutcheons, and fittings, prior to preparing surfaces for finishing.

E. Seal surfaces that might cause bleed through or staining of topcoat.

F. Remove mildew from impervious surfaces by scrubbing with solution of tetra-sodium phosphate and bleach. Rinse with clean water and allow surface to dry.

G. Concrete:
   1. Remove release agents, curing compounds, efflorescence, and chalk. Do not coat surfaces if moisture content or alkalinity of surfaces to be coated exceeds that permitted in manufacturer's written instructions.
   2. Clean surfaces with pressurized water. Use pressure range of 1,500 to 4,000 psi at 6 to 12 inches. Allow to dry.

H. Fiber Cement Siding: Remove dirt, dust and other foreign matter with a stiff fiber brush. Do not coat surfaces if moisture content or alkalinity of surfaces to be coated exceeds that permitted in manufacturer's written instructions.

I. Galvanized Surfaces:
   1. Prepare surface according to SSPC-SP 2.

J. Ferrous Metal:
   1. Solvent clean according to SSPC-SP 1.
   2. Remove rust, loose mill scale, and other foreign substances using methods recommended in writing by paint manufacturer and blast cleaning in accordance with SSPC-SP 6/NACE No.3. Protect from corrosion until coated.

K. Exterior Wood Surfaces to Receive Opaque Finish: Remove dust, grit, and foreign matter. Seal knots, pitch streaks, and sappy sections. Fill nail holes with tinted exterior calking compound after prime coat has been applied. Back prime concealed surfaces before installation.

L. Metal Doors to be Painted: Prime metal door top and bottom edge surfaces.

3.03 APPLICATION

A. Remove unfinished louvers, grilles, covers, and access panels on mechanical and electrical components and paint separately.

B. Exterior Wood to Receive Opaque Finish: If final painting must be delayed more than 2 weeks after installation of woodwork, apply primer within 2 weeks and final coating within 4 weeks.

C. Apply products in accordance with manufacturer's written instructions and recommendations in "MPI Architectural Painting Specification Manual".

D. Where adjacent sealant is to be painted, do not apply finish coats until sealant is applied.

E. Do not apply finishes to surfaces that are not dry. Allow applied coats to dry before next coat is applied.

F. Apply each coat to uniform appearance.

G. Dark Colors and Deep Clear Colors: Regardless of number of coats specified, apply additional coats until complete hide is achieved.

H. Sand metal surfaces lightly between coats to achieve required finish.

I. Vacuum clean surfaces of loose particles. Use tack cloth to remove dust and particles just prior to applying next coat.

J. Reinstall electrical cover plates, hardware, light fixture trim, escutcheons, and fittings removed prior to finishing.

3.04 FIELD QUALITY CONTROL

A. See Section 01 4000 - Quality Requirements, for general requirements for field inspection.

3.05 CLEANING

A. Collect waste material that could constitute a fire hazard, place in closed metal containers, and remove daily from site.

3.06 PROTECTION

A. Protect finishes until completion of project.

B. Touch-up damaged finishes after Substantial Completion.

3.07 COLOR SCHEDULE

A. Existing Exterior Fascia Boards and Gutters: E-OP
   1. Color: (P-5) Match existing trim color.

B. Exterior Fiber Cement Siding: E-OP
   1. Color (P-2): Match existing field color.

C. Exterior Fiber Cement Vertical Trim Boards: E-OP
   1. Color (P-3): Te be selected by Architect

D. Exterior Accent Color: E-OP
   1. Locations as noted on drawings.
   2. Color (P-4): To be selected by Architect

E. Exposed Exterior Steel Columns and Downspouts: E-OP
   1. Color: (P-2) unless noted otherwise on drawings.

END OF SECTION

SECTION 09 9123
INTERIOR PAINTING

PART 1 GENERAL

1.01 SECTION INCLUDES

A. Surface preparation.

B. Field application of paints.

C. Interior surfaces exposed to view, unless fully factory-finished and unless otherwise indicated.
   1. Both sides and edges of plywood backboards for electrical and telecom equipment before installing equipment.
   2. Prime surfaces to receive wall coverings.
   3. In finished area, paint shop-primed access panels.
      a. Finish access panels prior to installation or remove, paint, and reinstall panels.
         1) Spray applied finish only. Roller applied finish will not be accepted.
   4. Mechanical and Electrical:
      a. In finished areas, paint insulated and exposed pipes, conduit, boxes, insulated and exposed ducts, hangers, brackets, collars and supports, mechanical equipment, and electrical equipment, unless otherwise indicated.
      b. In finished areas, paint shop-primed items.

D. Do Not Paint or Finish the Following Items:
   1. Items factory-finished unless otherwise indicated; materials and products having factory-applied primers are not considered factory finished.
   2. Items indicated to receive other finishes.
   3. Items indicated to remain unfinished.
   4. Fire rating labels, equipment serial number and capacity labels, bar code labels, and operating parts of equipment.
   5. Stainless steel, anodized aluminum, bronze, terne-coated stainless steel, and lead items.
   6. Floors, unless specifically indicated.
   7. Ceramic and other tiles.
   8. Brick, architectural concrete, cast stone, integrally colored plaster, and stucco.
   9. Glass.
   10. Concrete masonry units in utility, mechanical, and electrical spaces.
   11. Acoustical materials, unless specifically indicated.
   12. Concealed pipes, ducts, and conduits.

1.02 RELATED REQUIREMENTS

A. Section 01 6116 - Volatile Organic Compound (VOC) Content Restrictions.

B. Section 06 2000 - Finish Carpentry: Wood wall trims and molding.

C. Section 09 2116 - Gypsum Board Assemblies

D. Section 09 9113 - Exterior Painting.

1.03 DEFINITIONS

A. Comply with ASTM D16 for interpretation of terms used in this section.

B. Specular Gloss: Ranges determined per Master Painters Institute (MPI). Sheen is specified to establish required gloss range.

	Sheen	Geometry/Deg.	Gloss Range	MPI Gloss Level
1.	Flat	60	Below 5	1
2.	Flat, light sheen	60	Max 10	2
3.	Eggshell	60	10 to 25	3
4.	Satin	60	20 to 35	4
5.	Semi-Gloss	60	35 to 70	5

6. Gloss	60	70 to 85	6

C. Finish (i.e. gloss level) of all painted surfaces shall be as specified herein or as noted on Finish Schedule.

1.04 REFERENCE STANDARDS

A. 40 CFR 59, Subpart D - National Volatile Organic Compound Emission Standards for Architectural Coatings; U.S. Environmental Protection Agency; current edition.

B. ASTM D16 - Standard Terminology for Paint, Related Coatings, Materials, and Applications; 2019.

C. ASTM D4442 - Standard Test Methods for Direct Moisture Content Measurement of Wood and Wood-Based Materials; 2020.

D. MPI (APL) - Master Painters Institute Approved Products List; Master Painters and Decorators Association; Current Edition.

E. MPI (APSM) - Master Painters Institute Architectural Painting Specification Manual; Current Edition.

F. SCAQMD 1113 - Architectural Coatings; 1977, with Amendment (2016).

G. SSPC-SP 1 - Solvent Cleaning; 2015, with Editorial Revision (2016).

H. SSPC-SP 2 - Hand Tool Cleaning; 2018.

I. SSPC-SP 6/NACE No.3 - Commercial Blast Cleaning; 2006.

J. SSPC-SP 13/NACE No.6 - Surface Preparation of Concrete; 2018.

1.05 SUBMITTALS

A. See Section 01 3000 - Administrative Requirements, for submittal procedures.

B. Product Data: Provide complete list of products to be used, with the following information for each:
   1. Manufacturer's name, product name and/or catalog number, and general product category (e.g., "alkyd enamel").
   2. MPI product number (e.g., MPI #47).
   3. Cross-reference to specified paint system products to be used in project; include description of each system.
   4. Manufacturer's installation instructions.
   5. If proposal of substitutions is allowed under submittal procedures, explanation of substitutions proposed.

C. Samples: Submit three paper "draw down" samples, 8-1/2 by 11 inches in size, illustrating range of colors available for each finishing product specified.
   1. Where sheen is specified, submit samples in only that sheen.
   2. Where sheen is not specified, discuss sheen options with Architect before preparing samples, to eliminate sheens not required.
   3. Allow minimum 10 business days for approval process, after receipt of complete samples by Architect.

D. Manufacturer's Instructions: Indicate special surface preparation procedures.

E. Maintenance Materials: Furnish the following for Owner's use in maintenance of project.
   1. See Section 01 6000 - Product Requirements, for additional provisions.
   2. Extra Paint and Finish Materials: 1 gal of each color; from the same product run, store where directed.
   3. CLEARLY Label each container with color in addition to the manufacturer's label.

1.06 QUALITY ASSURANCE

A. Manufacturer Qualifications: Company specializing in manufacturing the products specified, with minimum three years documented experience.

B. Applicator Qualifications: Company specializing in performing the type of work specified with minimum three years experience and approved by manufacturer.

C. Coats: Number of coats specified is minimum number acceptable, if full coverage is not obtained with specified number of coats, apply such additional coats necessary to produce required finish.

1.07 DELIVERY, STORAGE, AND HANDLING

A. Deliver products to site in sealed and labeled containers; inspect to verify acceptability.

B. Container Label: Include manufacturer's name, type of paint, brand name, lot number, brand code, coverage, surface preparation, drying time, cleanup requirements, color designation, and instructions for mixing and reducing.

C. Paint Materials: Store at minimum ambient temperature of 45 degrees F and a maximum of 90 degrees F, in ventilated area, and as required by manufacturer's instructions.

1.08 FIELD CONDITIONS

A. Do not apply materials when surface and ambient temperatures are outside the temperature ranges required by the paint product manufacturer.

B. Follow manufacturer's recommended procedures for producing best results, including testing of substrates, moisture in substrates, and humidity and temperature limitations.

C. Do not apply materials when relative humidity exceeds 85 percent, at temperatures less than 5 degrees F above the dew point, or to damp or wet surfaces.

D. Minimum Application Temperatures for Paints: 50 degrees F for interiors unless required otherwise by manufacturer's instructions.

E. Provide lighting level of 80 fc measured mid-height at substrate surface.

PART 2 PRODUCTS

2.01 MANUFACTURERS

A. Provide paints and finishes from the same manufacturer to the greatest extent possible.
   1. If a single manufacturer cannot provide specified products; minor exceptions will be permitted provided approval by Architect is obtained using the specified procedures for substitutions.
   2. Substitution of MPI-approved products by a different manufacturer is preferred over substitution of unapproved products by the same manufacturer.

B. Paints:
   1. Sherwin-Williams Company: www.sherwin-williams.com/#sle.

C. Primer Sealers: Same manufacturer as top coats.

D. Substitutions: See Section 01 6000 - Product Requirements.

2.02 PAINTS AND FINISHES - GENERAL

A. Paints and Finishes: Ready-mixed, unless intended to be a field-catalyzed paint.
   1. Where MPI paint numbers are specified, provide products listed in Master Painters Institute Approved Product List, current edition available at www.paintinfo.com, for specified MPI categories, except as otherwise indicated.
   2. Provide paints and finishes of a soft paste consistency, capable of being readily and uniformly dispersed to a homogeneous coating, with good flow and brushing properties, and capable of drying or curing free of streaks or sags.
   3. Provide materials that are compatible with one another and the substrates indicated under conditions of service and application, as demonstrated by manufacturer based on testing and field experience.
   4. Supply each paint material in quantity required to complete entire project's work from a single production run.
   5. Do not reduce, thin, or dilute paint or finishes or add materials unless such procedure is specifically described in manufacturer's product instructions.

B. Volatile Organic Compound (VOC) Content:
   1. Provide paints and finishes that comply with the most stringent requirements specified in the following:
      a. 40 CFR 59, Subpart D--National Volatile Organic Compound Emission Standards for Architectural Coatings.
      b. SCAQMD 1113 Rule.
   2. Determination of VOC Content: Testing and calculation in accordance with 40 CFR 59, Subpart D (EPA Method 24), exclusive of colorants added to a tint base and water added at project site; or other method acceptable to authorities having jurisdiction.

C. Colors: _____.
   1. Walls and trim: Match existing color(s)
   2. Ceilings: White
   3. Allow for minimum of three colors for each system, unless otherwise indicated, without additional cost to Owner.
   4. In finished areas, finish pipes, ducts, conduit, and equipment the same color as the wall/ceiling under which they are mounted.

2.03 PAINT SYSTEMS - INTERIOR

A. Paint I-OP - Interior Surfaces to be Painted, Unless Otherwise Indicated: Including gypsum board and wood.
   1. Two top coats and one coat primer.
   2. Top Coat(s): High Performance Architectural Interior Latex; MPI #138, 139, or 141.
   3. Top Coat Sheen:
      a. In locations where paint touch-up occurs on existing finishes, match gloss level of existing conditions, otherwise paint entire wall surface.
      b. Flat: MPI gloss level 1; use this sheen for areas concealed from view.
      c. Satin: MPI gloss level 4; use this sheen at all locations.
      d. Semi-Gloss: MPI gloss level 5; use this sheen for wet locations.
   4. Primer: As recommended by top coat manufacturer for specific substrate compliant with VOC requirements.

B. Paint I-OP-MD-WC - Medium Duty Vertical and Overhead: Including gypsum board.
   1. Two top coats and one coat primer.
   2. Top Coat(s): Interior Epoxy-Modified Latex; MPI #215.
   3. Top Coat Sheen:
      a. Semi-Gloss: MPI gloss level 5; use this sheen at all locations.
      b. Gloss: MPI gloss level 6; use this sheen for toilet rooms and other wet locations.
   4. Primer: As recommended by top coat manufacturer for specific substrate.

C. Paint I-OP-MD-DT - Medium Duty Door/Trim: For surfaces subject to frequent contact by occupants, including metals and wood:
   1. Medium duty applications include doors, door frames, railings, guardrails, and balustrades.
   2. Two top coats and one coat primer.
   3. Top Coat(s): Interior Alkyd, Water Based; MPI #169.
   4. Top Coat Sheen:
      a. Semi-Gloss: MPI gloss level 5; use this sheen at all locations.
      b. Gloss: MPI gloss level 6; use this sheen for shower rooms.
   5. Primer: As recommended by top coat manufacturer for specific substrate compliant with VOC requirements.
   6. Application Method: Spray applied finish.

D. Paint I-OP-MD-STLMedium Duty Vertical: Including uncoated steel, shop primed steel, and galvanized steel.
   1. Two top coats and one coat primer.
   2. Top Coat(s): Interior Alkyd, Water Based; MPI #169.

3. Top Coat Sheen:
   a. Semi-Gloss: MPI gloss level 5; use this sheen at all locations.
4. Primer: As recommended by top coat manufacturer for specific substrate.
5. Application Method: Spray applied finish.

2.04 PRIMERS

A. Primers: Provide the following unless other primer is required or recommended by manufacturer of top coats.
   1. Interior Institutional Low Odor/VOC Primer Sealer; MPI #149.
   2. Interior Rust-Inhibitive Water Based Primer; MPI #107.
   3. Interior Water Based Primer for Galvanized Metal; MPI #134 or #134 X-Green.
   4. Interior Alkyd Enamel Undercoat; MPI #46.
   5. Latex Primer for Interior Wood; MPI #39.

2.05 ACCESSORY MATERIALS

A. Accessory Materials: Provide primers, sealers, cleaning agents, cleaning cloths, sanding materials, and clean-up materials as required for final completion of painted surfaces.

B. Patching Material: Latex filler.

C. Fastener Head Cover Material: Latex filler.

D. Brushes and rollers: As required to provide the specified finish and textture.

PART 3 EXECUTION

3.01 EXAMINATION

A. Do not begin application of paints and finishes until substrates have been adequately prepared.

B. Verify that surfaces are ready to receive work as instructed by the product manufacturer.

C. Examine surfaces scheduled to be finished prior to commencement of work. Report any condition that may potentially affect proper application.

D. Test shop-applied primer for compatibility with subsequent cover materials; report incompatible primer conditions and submit recommended changes for Architect's approval.

E. Measure moisture content of surfaces using an electronic moisture meter. Do not apply finishes unless moisture content of surfaces is below the following maximums:
   1. Gypsum Wallboard: 12 percent.
   2. Plaster and Stucco: 12 percent.
   3. Interior Wood: 15 percent, measured in accordance with ASTM D4442.

F. Measure the ph factor of concrete, masonry, and mortar before starting any finishing process, using the method specified in MPI Architectural Painting Manual.
   1. Report results in writing to Architect before starting work.
   2. If results of test indicates need for remedial action, provide written description of remedial action. If a different primer or paint systems is required, state the total cost of the change. Do not proceed with remedial action or change without receiving written authorization from Architect.

3.02 PREPARATION

A. Clean surfaces thoroughly and correct defects prior to application.

B. Prepare surfaces using the methods recommended by the manufacturer for achieving the best result for the substrate under the project conditions.

C. Remove or repair existing paints or finishes that exhibit surface defects.

D. Remove or mask surface appurtenances, including electrical plates, hardware, light fixture trim, escutcheons, and fittings, prior to preparing surfaces or finishing.

E. Seal surfaces that might cause bleed through or staining of topcoat.

F. Remove mildew from impervious surfaces by scrubbing with solution of tetra-sodium phosphate and bleach. Rinse with clean water and allow surface to dry.

G. Acoustical Panel Ceilings:
   1. Pretreat ceiling water stains according to manufacturer's written instructions.
   2. Pretreat tiles saturated with grease or nicotine according to manufacturer's written instructions.

H. Concrete:
   1. Remove release agents, curing compounds, efflorescence, and chalk. Do not coat surfaces if moisture content or alkalinity of surfaces to be coated exceeds that permitted in manufacturer's written instructions.
   2. Prepare surface as recommended by top coat manufacturer and in accordance with SSPC-SP 13/NACE No.6.

I. Gypsum Board: Fill minor defects with filler compound. Spot prime defects after repair.

J. Plaster: Fill hairline cracks, small holes, and imperfections with latex patching plaster. Make smooth and flush with adjacent surfaces. Wash and neutralize high-alkali surfaces.

K. Galvanized Surfaces:
   1. Remove surface contamination and oils and wash with solvent according to SSPC-SP 1.
   2. Prepare surface according to SSPC-SP 2 and apply coat of etching primer.

L. Ferrous Metal:
   1. Solvent clean according to SSPC-SP 1.
   2. Shop-Primed Surfaces: Sand and scrape to remove loose primer and rust. Feather edges to make touch-up patches inconspicuous. Clean surfaces with solvent. Prime bare steel surfaces. Re-prime entire shop-primed item.
   3. Remove rust, loose mill scale, and other foreign substances using methods recommended in writing by paint manufacturer and blast cleaning in accordance with SSPC-SP 6/NACE No.3. Protect from corrosion until coated.

M. Wood Surfaces to Receive Opaque Finish: Wipe off dust and grit prior to priming. Seal knots, pitch streaks, and sappy sections with sealer. Fill nail holes and cracks after primer has dried; sand between coats. Back prime concealed surfaces before installation.

N. Wood Doors to be Field-Finished: Seal wood door top and bottom edge surfaces with clear sealer.

O. Metal Doors to be Painted: Prime metal door top and bottom edge surfaces.

3.03 APPLICATION

A. Remove unfinished louvers, grilles, covers, and access panels on mechanical and electrical components and paint separately.

B. Remove factory primed access panels and paint separately.

C. Apply products in accordance with manufacturer's written instructions and recommendations in "MPI Architectural Painting Specification Manual".
   1. Apply finish to completely cover surfaces with uniform appearance without brush marks, runs, sags, laps, ropiness, holidays, spotting, cloudiness, or other surface imperfections.

D. Where adjacent sealant is to be painted, do not apply finish coats until sealant is applied.

E. Do not apply finishes to surfaces that are not dry. Allow applied coats to dry before next coat is applied. Do not recoat until paint has dried to where it feels firm, does not deform or feel sticky under moderate thumb pressure, and application of another coat will not cause the undercoat to lift or lose adhesion.

F. Apply each coat to uniform appearance in thicknesses specified by manufacturer.

G. Dark Colors and Deep Clear Colors: Regardless of number of coats specified, apply as many coats as necessary for complete hide.

H. Minimum Coating Thickness: Apply paint materials no thinner than manufacturer's recommended spreading rate; provide total dry film thickness of entire system as recommended by manufacturer.
   1. Number of coats and film thickness required are the same regardless of application method.
   2. If undercoats, stains, or other conditions show through final coat of paint, apply additional coats until paint film is of uniform finish, color, and appearance.
   3. Give special attention to ensure edges, corners, crevices, welds, and exposed fasteners receive dry film thickness equivalent to that of flat surfaces.

I. Sand wood and metal surfaces lightly between coats to achieve required finish.

J. Vacuum clean surfaces of loose particles. Use tack cloth to remove dust and particles just prior to applying next coat.

K. Metal and Steel to Receive Opaque Finishes: Spray apply finish, do not brush apply.

L. Reinstall electrical cover plates, hardware, light fixture trim, escutcheons, and fittings removed prior to finishing.

3.04 CLEANING

A. Collect waste material that could constitute a fire hazard, place in closed metal containers, and remove daily from site.

3.05 PROTECTION

A. Protect finishes until completion of project.

B. Touch-up damaged finishes after Substantial Completion. Correct damage by cleaning, repairing or replacing, and repainting as approved by Architect.

C. Provide "Wet Paint" signs to protect newly painted finishes. Remove temporary protective wrappings provided by others to protect their work after completing painting operations.

END OF SECTION

This page intentionally left blank

SECTION 10 2600
WALL AND DOOR PROTECTION

PART 1 GENERAL

1.01 SECTION INCLUDES

A. Corner guards.

1.02 RELATED REQUIREMENTS

A. Section 05 5000 - Metal Fabrications: Corner guards fabricated from rolled metal sections or bent plate.

B. Section 05 5000 - Metal Fabrications: Anchors for attachment of work of this section, concealed in wall.

C. Section 06 1000 - Rough Carpentry: Blocking for wall and corner guard anchors.

D. Section 09 2116 - Gypsum Board Assemblies: Placement of supports in stud wall construction.

1.03 SUBMITTALS

A. See Section 01 3000 - Administrative Requirements, for submittal procedures.

B. Product Data: Indicate physical dimensions, features, wall mounting brackets with mounted measurements, and anchorage details.

C. Samples: Submit samples illustrating component design, configurations, joinery, color and finish.
   1. Submit two sections of corner guards, 6 inches long.

1.04 DELIVERY, STORAGE, AND HANDLING

A. Do not deliver products to project site until areas for storage and installation are fully enclosed, and interior temperature and humidity are in compliance with manufacturer's recommendations for each type of item.

1.05 WARRANTY

A. See Section 01 7800 - Closeout Submittals, for additional warranty requirements.

PART 2 PRODUCTS

2.01 MANUFACTURERS

A. Corner Guards:
   1. Inpro: www.inprocorp.com/#sle.
   2. Substitutions: See Section 01 6000 - Product Requirements.

2.02 PRODUCT TYPES

A. Corner Guards - Surface Mounted:
   1. Material: Type 304 stainless steel, No. 4 finish, 16 gage, 0.0625 inch thick.
   2. Width of Wings: 2 inches.
   3. Corner: Square.
   4. Length: As indicated on drawings; one piece.

B. Adhesives and Primers: As recommended by manufacturer.

2.03 FABRICATION

A. Fabricate components with tight joints, corners and seams.

PART 3 EXECUTION

3.01 EXAMINATION

A. Verify that rough openings, concealed blocking, and anchors are correctly sized and located.

B. Start of installation constitutes acceptance of project conditions.

3.02 INSTALLATION

A. Install components in accordance with manufacturer's instructions, level and plumb, secured rigidly in position to supporting construction.

B. Position corner guard 4 inches above finished floor to height as indicated on drawings.

3.03 TOLERANCES

A. Maximum Variation From Required Height: 1/4 inch.

3.04 CLEANING

A. Clean wall and door protection items of excess adhesive, dust, dirt, and other contaminants.

END OF SECTION

SECTION 10 4400
FIRE PROTECTION SPECIAITIES

PART 1 GENERAL

1.01 SECTION INCLUDES

A. Fire extinguishers.

B. Fire extinguisher cabinets.

C. Accessories.

1.02 RELATED REQUIREMENTS

A. Section 06 1000 - Rough Carpentry: Wood blocking product and execution requirements.

1.03 REFERENCE STANDARDS

A. FM (AG) - FM Approval Guide; Current Edition.

B. NFPA 10 - Standard for Portable Fire Extinguishers; 2022.

C. UL (DIR) - Online Certifications Directory; Current Edition.

1.04 SUBMITTALS

A. See Section 01 3000 - Administrative Requirements, for submittal procedures.

B. Product Data: Provide product information for fire extinguishers and cabinets including physical dimensions and installation instructions.

PART 2 PRODUCTS

2.01 MANUFACTURERS

A. Fire Extinguishers:
   1. Activar Construction Products Group, Inc. - JL Industries; Cosmic Extinguisher - Multipurpose Chemical: www.activarcpg.com/#sle.

B. Fire Extinguisher Cabinets and Accessories:
   1. Activar Construction Products Group, Inc. - JL Industries; Ambassador Series: www.activarcpg.com/#sle.

2.02 FIRE EXTINGUISHERS

A. Fire Extinguishers - General: Comply with product requirements of NFPA 10 and applicable codes, whichever is more stringent.
   1. Provide extinguishers labeled by UL (DIR) or FM (AG) for purpose specified and as indicated.

B. Multipurpose Dry Chemical Type Fire Extinguishers: Carbon steel tank, with pressure gauge.
   1. Class: A:B:C type.
   2. Size: 5 pound.
   3. Finish: Baked polyester powder coat, red color.

2.03 FIRE EXTINGUISHER CABINETS

A. Cabinet Configuration: Recessed.
   1. Size to accommodate accessories.
   2. Exterior nominal dimensions of 11.5 inch wide by 25 inch high by 6 inch deep.
   3. Trim: Flat, with 3/8 inch projected trim.

B. Door: 0.036 inch metal thickness, reinforced for flatness and rigidity with roller type catch. Hinge doors for 180 degree opening with two butt hinges.

C. Door Glazing: Full panel Acrylic plastic, clear, 0.090 inch thick, flat shape and set in resilient channel glazing gasket.

D. Cabinet Mounting Hardware: Appropriate to cabinet.

E. Fabrication: Weld, fill, and grind components smooth.

F. Finish of Cabinet Exterior Trim and Door: White.

G. Finish of Cabinet Interior: White colored enamel.

H. Hardware: Zinc plated pull handle.

2.04 ACCESSORIES

A. Cabinet Signage: Fire Extinguisher - vertical format.

B. Lettering: FIRE EXTINGUISHER decal, or vinyl self-adhering, pre-spaced black lettering in accordance with authorities having jurisdiction (AHJ).

PART 3 EXECUTION

3.01 EXAMINATION

A. Verify rough openings for cabinet are correctly sized and located.

3.02 INSTALLATION

A. Install in accordance with manufacturer's instructions.

B. Secure rigidly in place.

C. Place extinguishers in cabinets.

END OF SECTION

SECTION 12 2400
WINDOW SHADES

PART 1 GENERAL

1.01 SECTION INCLUDES

A. Interior manual roller shades.

1.02 RELATED REQUIREMENTS

A. Section 06 1000 - Rough Carpentry: Concealed wood blocking for attachment of headrail brackets.

B. Section 09 2116 - Gypsum Board Assemblies: Substrate for window shade systems.

1.03 REFERENCE STANDARDS

A. ASTM D4674 - Standard Practice for Accelerated Testing for Color Stability of Plastics Exposed to Indoor Office Environments 2019.

B. ASTM G21 - Standard Practice for Determining Resistance of Synthetic Polymeric Materials to Fungi; 2015, with Editorial Revision (2021).

C. NFPA 701 - Standard Methods of Fire Tests for Flame Propagation of Textiles and Films; 2023, with Errata.

D. WCMA A100.1 - Standard for Safety of Window Covering Products; 2022.

1.04 ADMINISTRATIVE REQUIREMENTS

A. Preinstallation Meeting: Convene one week prior to commencing work related to products of this section; require attendance of affected installers.

B. Sequencing:
   1. Do not fabricate shades until field dimensions for each opening have been taken with field conditions in place.
   2. Do not install shades until final surface finishes and painting are complete.

1.05 SUBMITTALS

A. See Section 01 3000 - Administrative Requirements, for submittal procedures.

B. Product Data: Provide manufacturer's standard catalog pages and data sheets, including materials, finishes, fabrication details, dimensions, profiles, mounting requirements, and accessories.

C. Shop Drawings: Include shade schedule indicating size, location and keys to details, head, jamb and sill details, mounting dimension requirements for each product and condition, and operation direction.

D. Verification Samples: Minimum size 6 inches square, representing actual materials, color and pattern.

E. Operation and Maintenance Data: List of all components with part numbers, sources of supply, and operation and maintenance instructions; include copy of shop drawings.

F. Warranty: Submit sample of manufacturer's warranty and documentation of final executed warranty completed in Owner's name and registered with manufacturer.

1.06 DELIVERY, STORAGE, AND HANDLING

A. Deliver shades in manufacturer's unopened packaging, labeled to identify each shade for each opening.

B. Handle and store shades in accordance with manufacturer's recommendations.

1.07 FIELD CONDITIONS

A. Do not install products under environmental conditions outside manufacturer's absolute limits.

1.08 WARRANTY

A. See Section 01 7800 - Closeout Submittals, for additional warranty requirements.

B. Provide manufacturer's warranty from Date of Substantial Completion, covering the following:
   1. Shade Hardware: One year.
   2. Fabric: One year.

PART 2 PRODUCTS

2.01 MANUFACTURERS

A. Interior Manually Operated Roller Shades:
   1. MechoShade Systems LLC; Mecho 5 System: www.mechoshade.com/#sle.
   2. Substitutions: See Section 01 6000 - Product Requirements.

B. Shade Fabric (PVC Free):
   1. Thermoveil Screens: 1300 Series: www.mechoshade.com
   2. Substitutions: See Section 01 6000 - Product Requirements.

2.02 ROLLER SHADES

A. General:
   1. Provide shade system components that are easy to remove or adjust without removal of mounted shade brackets.
   2. Provide shade system that operates smoothly when shades are raised or lowered.

B. Roller Shades:
   1. Brackets and Mounting Hardware: As recommended by manufacturer for mounting indicated and to accommodate shade fabric roll-up size and weight.
   2. Roller Tubes: As required for type of shade operation.
   3. Hembars: Designed to maintain bottom of shade straight and flat.
   4. Manual Operation for Interior Shades:
      a. Clutch Operator: Manufacturer's standard material and design, permanently lubricated.
      b. Drive Chain: Continuous loop, beaded ball chain with restraining device, 95 lb minimum breaking strength; comply with WCMA A100.1. Provide upper and lower limit stops.

END OF SECTION

THE FOLLOWING ARE SPECIFICATIONS PREPARED BY PBS

SECTION 02 82 13 – ASBESTOS ABATEMENT

PART 1 GENERAL

1.1 SCOPE OF WORK

A. This section covers the removal of materials that contain greater than one percent asbestos.

B. The abatement contractor shall provide all labor, materials, equipment, services, permits, and insurance required to complete asbestos abatement procedures as indicated in these Specifications and the associated Hazardous Materials Abatement Plan drawing HA1.

C. Asbestos-containing building materials are known to exist elsewhere and immediately adjacent to items to be removed. Do not disturb asbestos-containing building materials to remain.

D. Refer to the *Pre-Renovation Hazardous building Materials Survey Report, PBS Engineering and Environmental, January 2025*, for additional asbestos survey, locations, and sampling information.

E. The following table list the asbestos-containing building materials (ACM) to be removed. Abatement includes soft (non-structural) demolition as required, asbestos-containing materials removal, and disposal.

Table 1. Asbestos-Containing Materials to be Removed – Base Bid

Asbestos-Containing Building Materials	Approximate Quantity	Location
Vinyl Floor Tile and Associated Mastic	2,300 SF	See drawings
Exterior Door Caulking	50 LF	See drawings
Exterior Window Caulking	900 LF	See drawings
Pipe Insulation	500 LF	Boiler Room
Duct with Paint/Mastic*	300 SF	Boiler Room
<1% Asbestos Covebase Mastic**	350 LF	See drawings

SF: Square feet, LF: Linear Feet, EA: Each; *: Duct to be fully demolished; **: See Specification 02 82 21 for handling requirements

Table 2. Asbestos-Containing Materials to be Removed – Bid Alternate 1

Asbestos-Containing Building Materials	Approximate Quantity	Location
Vinyl Floor Tile and Associated Mastic	650 SF	See drawings
<1% Asbestos Covebase Mastic*	80 LF	See drawings

SF: Square feet, LF: Linear Feet, EA: Each; *: See Specification 02 82 21 for handling requirements

F. Coordinate all abatement items and scheduling with the District and Environmental Consultant.

1.2 DEFINITIONS

A. Abatement: Procedures to control fiber release from asbestos-containing building materials, which include encapsulation, enclosure, removal, repair, and related activities.

B. Aggressive Sampling: Air sampling method that assures that asbestos fibers remain airborne during sampling. All surfaces inside the work area will be agitated by the liberal use of compressed air, leaf blowers, or similar. Fans will then be run throughout the sampling period to keep all suspended fibers airborne.

C. AHERA: Asbestos Hazard Emergency Response Act, 40 CFR Part 763.

D. Air Lock: A system for permitting ingress or egress without permitting air movement between a contaminated area and an uncontaminated area, typically consisting of two curtained doorways at least three feet apart.

E. Air Monitoring: The process of measuring the asbestos fiber content of a specific volume of air in a stated period of time.

F. Amended Water: Water containing a surfactant additive.

G. Asbestos-containing Material (ACM): Any material containing more than one percent asbestos as defined under NESHAPS CFR 40, Part 61, OAR Chapter 340, Division 248, OR-OSHA 437, 1926.1101, and OSHA 29 CFR Part 1926.1101.

H. Authorized Visitor: The owner or designated representative, or a representative of any regulatory or other agency having jurisdiction over the project, and having required training, medical, fit test, etc.

I. Certified Industrial Hygienist (CIH): An industrial hygienist certified in comprehensive practice by the American Board of Industrial Hygiene.

J. Construction, Manager/General Contractor (CMGC): A construction delivery method in which the construction manager acts as the general contractor with schedule and cost risk. The CMGC provides design phase assistance in evaluating costs, schedule, and implications of systems and materials during design.

K. Class I Asbestos Work: Activities involving the removal of TSI and surfacing ACM and PACM.

L. Class II Asbestos Work: Activities involving the removal of ACM, which is not thermal system insulation or surfacing material. This includes, but is not limited to, the removal of asbestos-containing wallboard, floor tile and sheeting, roofing and siding shingles, and mastics.

M. Clean Room: An uncontaminated area or room that is part of the worker decontamination enclosure system, with provisions for storing workers' street clothes and clean protective equipment.

N. Critical Barrier: Solid barrier constructed from minimum of 2- by 4-inch studs, 16-inch o.c.; 0.5-inch plywood or drywall sealed airtight and covered on both sides (where applicable) with two layers of 6-mil plastic.

O. Curtained Doorway: A device to allow ingress or egress from one room to another while permitting minimal air movement between the rooms, typically constructed by placing three overlapping sheets of plastic over an existing or temporarily-framed doorway, securing each along the top of the doorway in a pleated fashion and securing one vertical side of each sheet on alternating sides of consecutive sheets. Two curtained doorways spaced a minimum of three feet apart to form an air lock.

P. Disposal: Procedures necessary to transport and deposit the asbestos-contaminated material in an approved waste disposal site in compliance with the Environmental Protection Agency (EPA) and other applicable regulations.

Q. Enclosure: Procedures necessary to completely seal all asbestos-containing material behind airtight, impermeable, permanent barriers, including PVC jackets.

R. Encapsulant (Sealant): A liquid material that can be applied to asbestos-containing material and that controls the possible release of asbestos fibers from the material either by creating a membrane over the surface (bridging encapsulant), or by penetrating the material and binding its components together (penetrating encapsulant).

S. Environmental Consultant: Environmental consultant specializing in asbestos abatement—PBS Engineering and Environmental Inc., 4412 SW Corbett Avenue, Portland, Oregon, 97239, 503.248.1939—or any subcontractor designated by PBS.

T. Equipment Room: A contaminated area or room, which is part of the worker decontamination enclosure system, with provisions for storage of contaminated clothing and equipment.

U. Fitting: With regard to pipe insulation, a fitting is any elbow, offset, reducer, tee, etc.

V. Fixed Object: Fixtures that are attached to the building or too heavy or bulky to remove from the work area.

W. Glovebag: A manufactured device consisting of a transparent plastic bag with inward projecting sleeves, an internal tool pouch, provisions for fastening and sealing at the top and sides, and a receptacle in the bottom to hold asbestos waste. The glovebag is installed to surround the material to be removed and contain all fibers released during the process. Glovebags are used to remove insulation from small sections of pipe and fittings.

X. HEPA Filter: A high efficiency particulate air (absolute) filter capable of trapping and retaining 99.97 percent of asbestos fibers greater than 0.3 microns in length.

Y. HEPA Vacuum Equipment: High efficiency particulate air (absolute) filtered vacuuming equipment with a filter system capable of collecting and retaining asbestos fibers. Filters of 99.97 percent efficiency for retaining fibers of 0.3 microns in length or larger shall be installed for filtering discharge air.

Z. Independent Testing Laboratory: A laboratory financially independent from and hired by the owner, architect, or contractor that is either AIHA-accredited for asbestos with demonstrated proficiency via the AIHA PAT program, or has analysts proficient in the AIHA AAR program for air sample analysis.

AA. Industrial Hygienist: An employee of the Independent Testing Laboratory who is experienced and trained in asbestos sampling and analysis as specified.

BB. Insulating Cement: Cementitious material applied to pipe reducers, manifolds, etc.

CC. Isolated Work Area: A totally contained area of the facility where abatement activities are performed.

DD. Movable Object: Furnishings not attached to the building structure that can be removed from the work area.

EE. Negative-air Glovebag: A manufactured device consisting of a transparent plastic bag with inward projecting sleeves, an internal tool pouch, provisions for fastening and sealing it at the top and sides, and a receptacle in the bottom to hold asbestos waste. The glovebag is installed to surround the material to be removed and contain all fibers released through the process, with provisions for allowing continuous airflow through the bag while maintaining negative pressure inside.

FF. Owner Representative: Designated by the Owner, and/or designated employee(s) of the Owner Representative.

GG. PACM: Presumed asbestos-containing materials.

HH. Pressure Differential Fan System: An air-purifying fan system located inside or outside the isolated work area that draws air out of the work area through a HEPA filter, keeping static air pressure in the work area lower than in adjacent areas, and preventing escape of contaminated air from work area to adjacent areas.

II. Public Area: Any area outside the isolated work area. When work area isolation measures are removed, the work area becomes a public area.

JJ. Removal: All operations where ACM and/or PACM are taken out or stripped from structures or substrates, and include demolition activities.

KK. Shower Room: A room between the clean room and the equipment room in the worker decontamination enclosure system that is equipped with soap, shampoo, and hot and cold running water controllable at the faucet, and suitably arranged for complete showering during decontamination. The shower room must be separated from the clean room and equipment room by air locks.

LL. Special Fitting: With regard to pipe insulation, a special fitting is any valve, union, strainer, thermometer, flange, etc.

MM. Surfactant: A chemical wetting agent added to water to improve penetration, thus reducing the quantity of water required for a given operation or area.

NN. Tack Coat: A coat of penetrating encapsulant applied to all surfaces from which asbestos-containing materials have been removed.

OO. Thermal System Insulation (TSI): ACM applied to pipes, fittings, boilers, breeching, tanks, ducts, or other structural components to prevent heat loss or gain.

PP. Vacuum Loader Removal: Wetting and pneumatic conveying of loose material through a vacuum hose to a sealed collection tank specially equipped to prevent escape of fibers.

QQ. Wet Cleaning: The process of eliminating asbestos from building surfaces and objects by using cloths, mops, or other cleaning tools that have been dampened with water.

RR. Worker Decontamination Enclosure System: A showering facility for workers, typically consisting of a clean room, a shower room, and an equipment room. Each of these rooms is separated from the others by air locks. The equipment room is separated from the work area by a curtained doorway. The clean room is separated from the public area by a curtained doorway.

SS. Worksite Entry Logbook: A logbook kept in the clean room that must be signed by everyone entering or leaving the work area. All pages of the logbook must be the same as the sample page bound into these Specifications.

1.3 DOCUMENTS INCORPORATED BY REFERENCE

A. The current issue of each document shall govern. Where conflict among requirements or with these Specifications exists, the most stringent requirements shall apply.

1. US Environmental Protection Agency National Emissions Standards for Hazardous Air Pollutants (NESHAPS). (Code of Federal Regulations Title 40, Part 61, Subparts A and M.)

2. US Environmental Protection Agency Office of Toxic Substances Guidance Document, "Guidance for Controlling Friable Asbestos-Containing Materials in Buildings." EPA Report Number 560/5-85-024 ("Purple Book").

3. US Department of Labor Occupational Safety and Health Administration (OSHA):

a. Title 29 Code of Federal Regulations Section 1910.1001—General Industry Standard for Asbestos.

b. Title 29 Code of Federal Regulations Section 1910.134—General Industry Standard for Respiratory Protection.

c. Title 29 Code of Federal Regulations Section 1910 et al.—Occupational Exposure to Asbestos; Final Rule.

d. Title 29 Code of Federal Regulations 1926.1101—Construction Standard for Asbestos.

e. Title 29 Code of Federal Regulations Section 1910.1020—Access to Employee Exposure and Medical Records.

f. Title 29 Code of Federal Regulations Section 1910.1200—Hazard Communication.

4. National Institute for Occupational Safety and Health (NIOSH), 42 CFR, Part 84, Respiratory Protective Devices.

5. American National Standards Institute (ANSI) NY; ANSI Standard Z 88.2-1980 "American National Standards Practice for Respiratory Protection," latest edition.

6. Oregon Administrative Rules Chapter 340, Division 248, Department of Environmental Quality; Chapter 340, Division 33, Licensing and Certification Requirements.

7. Oregon Administrative Rules Chapter 437, Divisions 2 and 3.

8. Oregon Revised Statutes (ORS), Chapters 279C, Certified Asbestos Contractors and Prevailing Wage; 656, Workers Compensation; and 701, Construction Contractors and Contracts.

9. All related electrical work shall be performed in accordance with the National Electrical Code.

10. All local ordinances, regulations, or rules pertaining to asbestos, including its storage, transportation, and disposal.

1.4 SUBMITTALS AND NOTICES

A. Contractors shall submit three bound indexed copies of each submittal package as indicated below.

B. Contractors shall submit to the architect and environmental consultant the following information prior to beginning work on the project:

1. CONTRACTOR'S LICENSE. Submit proof that the asbestos abatement contractor is currently and for the duration of the project licensed in the state of Oregon to perform asbestos abatement, per ORS Chapter 701, and OAR Chapter 340, Division 248.

2. ASBESTOS SUPERVISOR. Submit the name and resume of the assigned on-site foreman. At minimum, the foreman shall have successfully completed the Department of Environmental Quality (DEQ) asbestos supervisor course as approved by the State of Oregon. Other criteria such as references and similar projects will also be reviewed. At the architect or environmental consultant’s request, the contractor shall arrange an oral interview with the assigned on-site foreman. The owner, architect, and the environmental consultant reserve the right to reject the foreman from the work at any time during the project. The contractor shall then assign another on-site foreman for the owner, architect, and environmental consultant’s approval as described above.

3. INSURANCE CERTIFICATE. Submit a copy of the certificate of asbestos-specific liability insurance policy.

4. WORKER CERTIFICATION. Submit written proof indicating that all employees impacting asbestos-containing materials are Oregon state certified asbestos workers. Proof shall include photocopies of certificates and a signature from the contractor's principal indicating that all employees assigned to this project have completed such a program.

5. RESPIRATOR PROGRAM. Submit written proof indicating respirator program complies with all parts of OSHA Asbestos Regulations CFR Title 29, Part 1910.134 and 1926.1101, OR-OSHA Chapter 437, 1910.134 and 1926.1101.

6. MEDICAL PROGRAM. Submit written proof medical exam program complies with OSHA Asbestos Regulations CFR Title 29, Section 1926.1101 and OR-OSHA Chapter 437, 1926.1101.

7. EMERGENCY PLANS. Submit a written emergency control and cleanup plan to be followed by the contractor in the event of an accidental breach in containment, power failure, and accidental disturbance of ACMs in non-isolated areas.

8. NOTIFICATION. Submit copy of written notification to DEQ of the proposed asbestos work not fewer than 10 days before work commences on this project.

9. DISPOSAL PLAN. Submit written proof that all required permits and arrangements regarding the transportation and disposal of asbestos-containing or contaminated materials, supplies, etc. have been obtained. The disposal site must be approved by the EPA and/or DEQ and other responsible agencies.

10. WORK PLAN. Submit a written "work plan" satisfactory to the architect and environmental consultant describing the schedule for asbestos abatement, decontamination procedures, and plans for construction and location of decontamination enclosure systems, pressure differential exhaust fans, etc. in compliance with these Specifications and applicable regulations, including calculations for determining required number of negative-air filtration units. The plan shall schedule the systematic flow of work throughout the facility per Specifications on a day-by- day basis, outlining room-by-room, or area-by-area procedures and planned alternative control measures. The contractor shall keep close coordination of his work with the architect and environmental consultant.

11. AIR MONITORING. Submit information pertaining to the proposed Air Monitoring Program for this project, if appropriate. This information shall include the name(s) of the certified industrial hygienist appointed, the name of the on-site industrial hygiene technician working under his supervision, types of equipment, and sampling schedule, sampling procedures, calibration recordkeeping, and testing laboratory proposed.

12. PRODUCT INFORMATION. Submit complete product information for any materials and products for which the contractor requests approval for use on this job (other than those specified).

13. EMERGENCY PHONE NUMBER. Submit a local phone number at which the contractor or on-site foreman can be reached on a 24-hour basis during the course of the work.

C. Contractor shall not begin work until submittals are reviewed and accepted by architect and the environmental consultant. Allow a ten-day review period.

D. During the work, the contractor shall submit the following to the architect and environmental consultant, on a periodic basis as agreed to by the architect, environmental consultant, and contractor:

1. Waste shipment and disposal documentation.

2. Air monitoring data.

3. Notification updates.

E. Contractor shall submit to the environmental consultant, in writing, all information required above regarding any new asbestos workers hired by, or subcontracted to, the contractor before these new asbestos abatement workers begin work.

F. Prior to removal of decontamination systems and isolation barriers, the contractor shall obtain specific written permission from the environmental consultant.

G. Prior to making final application for payment the contractor shall:

1. Complete all work under this contract.

2. Submit to the environmental consultant all required submittals, including all waste shipment records completely filled out and signed.

3. Submit to the owner all payroll reports for work on this contract and other information as described elsewhere in the Specifications, if appropriate, under the contract.

4. Submit to the environmental consultant "as-abated" drawings along with a signed affidavit stating that all asbestos-containing materials have been removed as indicated on the drawings.

H. See other sections of these Specifications, and EPA, OSHA, and other standards referenced therein, for further information and requirements not included above.

1.5 BUILDING PROTECTION

A. Building Security and Protection

1. The contractor shall post adequate warning signs at all potential entrances to work areas as required by EPA and OSHA.

2. The contractor shall protect all existing fixed equipment, building finishes that are to remain, and existing systems and functions from damage during the abatement process. Extra precautions are to be taken in protecting existing electrical panels, light fixtures, etc. Any damage to existing building, services, and/or equipment shall be remedied by the contractor at their expense.

3. Contractor shall clean external surfaces of contaminated containers and equipment thoroughly by wet sponging and HEPA vacuum.

4. Contractor shall maintain access and use of existing fire lanes.

1.6 PERSONAL PROTECTION

A. Training

1. Prior to commencement of work, contractor shall ensure all workers have been trained as specified.

2. The contractor shall provide and post, in the clean room(s) and the equipment room(s), the decontamination, respirator, and work procedures to be followed by the workers.

B. Personnel Personal Protective Equipment for Asbestos Removal

1. Work clothes shall consist of disposable full-body coveralls and head and foot covers ("Tyvek" or approved), boots, or sneakers. Eye, hearing, fall protection, and hard hats should be available as appropriate.

2. At minimum, respiratory protection shall be approved by National Institute for Occupational Safety and Health/Mine Safety and Health Administration (NIOSH/MSHA); US Department of Labor; US Department of Health, Education, and Welfare; Centers for Disease Control; and as listed below. Respiratory protection shall provide workers with a maximum calculated fiber level inside the mask of 0.01 f/cc.

3. Additional respiratory protection shall be as required by CFR 29 1910.134 and 1926.1101, OR-OSHA Chapter 437, 1910.134 and 1926.1101.

4. As part of the Contractor's Respiratory Protection Program, all workers shall be provided with a selection of brands and sizes of respirators to choose from. At a minimum, all workers shall be qualitatively fit-tested at the time of respirator selection per OR-OSHA Worker's Compensation Department Rule 22-069 (4)(e)(5)(i), and semiannually thereafter.

5. Contractor shall supply replacement filter cartridges, as required. Cartridges that have become wet or clogged shall be replaced immediately.

C. Worker Decontamination Enclosure System

1. The contractor shall construct a personnel decontamination facility immediately outside of the isolated work area consisting of three chambers and two air locks as follows:

a. The equipment room shall consist of an air lock to the shower room, and a curtained doorway to the work area.

b. The shower room shall have two air locks, one to the equipment room and one to the clean room. All showers shall have hot and cold water controllable at the taps and installed in this room. The contractor shall supply and maintain soap, shampoo, and towels at all times in the shower area. Shower wastewater shall be filtered to remove all fibers larger than five microns, or as required by local regulations, before disposal in the municipal sewer system, or shall be collected and disposed of as asbestos-contaminated material. Permits shall be obtained and all water discharge regulations complied with, as required by local municipalities. Water filters shall be disposed of as asbestos-contaminated material.

c. The clean room shall consist of an air lock to the shower room and a curtained doorway to the adjacent building area. The clean room shall contain a first aid kit, a place to sit down, the Worksite Entry Logbook, and storage for workers' and

visitors' clothing and shoes. Work, respirator, and decontamination procedures; regulations; and prevailing wage rates shall be conspicuously posted. There shall be a supply of clean, protective clothing, and respirators and cartridges in the clean room at all times.

d. A monometer measuring pressure differential within and outside the containment shall be installed and remain operable on any containment from the start of abatement work until work is complete, and satisfactory clearance results are obtained. Air pressure within the containment shall remain at or below -0.02 inches of water (compared to ambient air pressure) throughout.

2. Contractor shall not begin asbestos abatement work unless this system is functional, in good repair, and has been found acceptable for specification compliance by the environmental consultant.

D. Personnel Protection Procedures in Isolated Work Areas

1. Each worker shall, upon entering the jobsite, remove street clothes in the clean change room, put on and fit-test their respirator, put on clean protective clothing, and sign in on the Worksite Entry Logbook before entering the equipment room or the work area.

2. Workers shall, each time they leave the work area, remove gross contamination from clothing before leaving the work area; proceed to the equipment room and remove and dispose of disposable work clothes; remove and store shoes, boots, and other equipment except respirators; still wearing the respirator, proceed to the showers and clean the outside of the respirator with soap and water while showering; remove the respirator; thoroughly shampoo and wash themselves; remove filters, dispose of filters in the container provided for that purpose, and wash and rinse the inside of the respirator.

3. Following showering and drying off, each worker shall proceed directly to the clean change room and dress in clean clothes at the end of each day's work or before eating, smoking, or drinking. Before reentering the work area from the clean change room, each worker shall put on his respirator with clean filters, dress in clean protective clothing, and sign in on the Worksite Entry Logbook.

4. Contaminated work footwear and other equipment shall be stored in the equipment room when not in use in the work area. Upon completion of asbestos abatement, footwear shall be disposed of as contaminated waste or cleaned thoroughly inside and out, using soap and water, before removing from work area.

5. Workers shall not eat, drink, or chew gum at the worksite except in the established clean room. Smoking or using other tobacco products is prohibited.

6. Workers shall be fully protected with respirators and protective clothing immediately prior to the first disturbance of asbestos-containing or contaminated material and until final cleanup is completed.

E. Access to Isolated Work Area by Others

1. Except for emergency personnel, the contractor shall limit access to the work area to authorized visitors.

2. The contractor shall provide protective clothing, respirators, and equipment for all authorized visitors, as specified above.

3. All authorized visitors shall be subject to the personnel protection provisions specified above, and shall sign in and out on the Worksite Entry Logbook.

F. Personal Protection during Work in Non-Isolated Work Areas:

1. Work clothes per Section 1.06 B.

2. Respiratory protection per Section 1.06 B.

3. Worker protection procedures will differ from Section 1.06 D, in that two layers of coveralls shall be worn after removal of street clothes. Worker decontamination through a Worker decontamination enclosure is required. The first layer of coveralls must be removed when exiting the glovebag work area. The worker shall immediately proceed to the worker decontamination unit. The remaining requirements of Section 1.06 D still apply.

4. Contractor shall submit to the architect and environmental consultant for approval an emergency control and cleanup plan to be followed in the event of asbestos contamination during glovebag use. Contractor shall ensure all workers are thoroughly familiar with approved plan.

5. Contractor shall promptly remove all bags as they are used to the bag-holding and decontamination enclosure system.

G. Emergency Precautions

1. The contractor shall establish emergency and fire exits from the work area. Contractor shall ensure these exits are well marked and remain unobstructed.

2. The contractor shall be prepared to administer first aid to injured personnel after decontamination. Seriously injured personnel shall be treated immediately or evacuated without delay for decontamination.

3. Contractor shall notify the local fire department of the asbestos abatement project prior to beginning work area preparation.

1.7 SAFETY

With regard to the work of this contract, the safety of the contractor's employees, the owner's employees, and the public is the sole responsibility of the contractor.

1.8 LIABILITY

The contractor is an independent contractor and not an employee of the owner, architect, or the environmental consultant. The owner, architect, and environmental consultant shall have no liability to the contractor, or any third persons, for contractor's failure to faithfully perform and follow the provisions of these Specifications and the requirements of the governing agencies. Notwithstanding the failure of the owner, architect, or the environmental consultant to discover a violation by the contractor of any of the provisions of

these Specifications, or to require the contractor to fully perform and follow any of them, shall not constitute a waiver of any of the requirements of these Specifications, which shall remain fully binding upon the contractor.

1.9 DELIVERY
Contractor shall deliver all materials to the worksite in the original packages, containers or bundles bearing the name of the manufacturer and the brand name.

1.10 STORAGE
Contractor shall store all materials subject to damage off the ground, away from wet or damp surfaces, away from heat sources, and under cover sufficient to prevent damage, contamination, or fire.

1.11 PROTECTION
Damaged or deteriorating materials shall not be used and shall be removed from the premises by the contractor. Materials that become contaminated with asbestos shall be disposed of in accordance with the applicable regulations by the contractor.

1.12 SUBCONTRACTORS
Any subcontractors employed by the contractor shall be bound to all the work and safety standards specified elsewhere in this Specification. Subcontractor's personnel shall be fully trained and supervised by the contractor during performance of this work.

1.13 AIR MONITORING BY ABATEMENT CONTRACTOR

A. An Independent Testing Laboratory shall be retained by the Abatement Contractor. All air-monitoring analysis shall be performed by an Industrial Hygienist. The Industrial Hygienist must be experienced and trained in asbestos sampling and analysis. At a minimum, documentation of prior asbestos sampling and analysis experience, plus satisfactory completion of the NIOSH 582 course or equivalent formal asbestos education, will be required. The laboratory must meet the requirements specified in Section 02 82 13. Air sample collection may be performed by an Industrial Hygienist or the Abatement Contractor's foreman at the Abatement Contractor's option.

B. Documentation shall be kept for each filter sample procured as to worker sampled, work area location, date, and time taken, volume of air drawn through filter, pump identification number and calibration. Documentation shall indicate in what areas tests were taken and shall clearly indicate the specified maximum allowable fiber levels for each area tested. Submit chain-of-custody records along with all samples.

C. The samples shall be collected on 25 millimeter (mm) filters and analyzed within 12 hours using the membrane filter method at 400-500x magnification with phase contrast illumination - NIOSH Analytical Method No. 7400 - for laboratory and field analysis. The analyst shall sign and submit permanent records of all samples analyzed directly to the Environmental Consultant. The Independent Testing Laboratory shall seal the unused portion of all filters in airtight containers so that individual samples can be reanalyzed at a later date if necessary. The containers shall be clearly labeled with project name and sample number and shall become property of the Owner at work completion at the Owner's request.

D. The Abatement Contractor's testing laboratory shall submit sample analysis results to the Environmental Consultant verbally within 18 hours from the time of collection and written within two weeks including chain-of-custody and equipment calibration records.

E. Abatement Contractor's Sampling During Abatement:

1. Air monitoring shall be performed to provide samples during the period of asbestos abatement in each work area. Begin sampling when asbestos removal commences. Samples are to be taken where Class I or II work is being conducted during each 8-hour work shift until abatement is complete in that work area or until a negative exposure assessment is established per 29 CFR 1926.1101.

2. The Abatement Contractor shall determine which worker(s) in each work area is probably experiencing the most severe exposure. This is the "Most Contaminated Worker(s)". Eight (8)-hour TWA and 30-minute excursion samples shall be collected on this worker(s). This worker shall wear a personal sampling pump and the sample shall be drawn from the breathing zone of this worker. All other samples are area samples.

3. The number of air samples collected shall be determined by the Abatement Contractor, and may be altered during the project based on work activity and results.

4. The maximum allowable fiber levels shall be as determined by the Environmental Consultant based on the respiratory protection being utilized.

F. Abatement Contractor shall notify the Department of Environmental Quality of air monitoring clearance results as supplied by Environmental Consultant. Notification shall be within 30 days after monitoring procedures were performed in accordance to OAR 340-32-465.

1.14 AIR MONITORING BY OWNER

A. The Owner will retain an experienced Industrial Hygienist/Environmental Consultant to collect and analyze asbestos air samples. Documentation of sample results will be forwarded to the Abatement Contractor as appropriate to regulatory requirements.

B. Samples analyzed by phase contrast microscopy (PCM) will use NIOSH Analytical Method No. 7400. Samples analyzed by transmission electron microscopy (TEM) will use either the AHERA methodology, 40 CFR Part 763, or Yamate Level Two.

C. Owner's Air Sampling During and After Abatement:

1. Air Sampling Table is to be used as a guide. The Owner's Industrial Hygienist/Environmental Consultant may modify criteria. Modifications to the Maximum Allowable Fiber Count shall be made in writing by the Owner.

Type of Sample	Average Samples per 8-hour Work Shift	Sample Volume--L (Liters [L])	Approximate Flow Rate	Maximum Allowable Fiber Count (f/cc)
HEPA Fan Exhaust	0 or selected units	400 to 2,000 L	2 to 10 LPM	0.01 f/cc
Outside of Work Area	0 to 5	400 to 2,000 L	2 to 10 LPM	0.01 f/cc or <pre-abatement

Clearance PCM	5/work area	800 to 3,000 L	2 to 10 LPM	0.01 f/cc
Clearance TEM	5/work area	1,200 to 1,800 L	2 to 10 LPM	<70 s/mm^2 average

LPM = liters per minute
f/cc = fibers per cubic centimeter
s/mm^2 = structures per millimeters squared

2. Air sampling for post-abatement work in isolated work areas will use the aggressive sampling method. Use of aggressive sampling in other areas shall be as directed by the Environmental Consultant. Aggressive sampling shall be conducted to assure that fibers remain airborne during sample collection.

3. Analysis of all clearance samples shall be via PCM.

4. The Abatement Contractor shall allow 48 hours for the collection and analysis of final PCM air clearance samples. In addition, the Abatement Contractor must provide at least 24 hours advance notice to the Environmental Consultant for final visual Inspection and clearance air monitoring.

5. The Owner reserves the right to monitor Abatement Contractor's performance via air samples on abatement workers and in the work area in addition to the Abatement Contractor's air monitoring.

1.15 QUALITY ASSURANCE

A. If, at any time during the work, analysis of an air sample taken by the Abatement Contractor, Owner, or Owner's representative, indicates a fiber count in excess of the allowable maximums specified, the Industrial Hygienist who analyzed the air sample shall immediately notify:

1. The Abatement Contractor's Foreman

2. The Environmental Consultant: PBS Engineering and Environmental Inc.

3. Other workers, employees, occupants, etc. in affected area(s).

B. Immediately upon being notified of fiber count exceeding the specified maximum allowable levels, the Abatement Contractor shall perform the following steps in the order presented, at no additional cost to the Owner:

1. Stop abatement work.

2. Identify source of high fiber counts.

3. Immediately correct any containment breaches, pressure differential changes or other potential cause, and other concerns with the Environmental Consultant, and the Owner, if the Owner is available. The Environmental Consultant will determine the affected area and affected adjacent areas considered to be contaminated. The Environmental Consultant will

determine the actions to be taken by the Abatement Contractor at no additional cost to the Owner.

a. Clean the affected area and the affected adjacent areas. Cleaning shall use wet methods and HEPA vacuuming.

b. Resample air until fiber counts are determined to be below one half of the specified maximum levels.

c. Secure and repair containment barriers, repair or add equipment.

d. Modify work procedures, and make other changes determined to be the possible cause of high fiber counts.

4. Carefully resume work under close air monitoring.

5. The Abatement Contractor shall be responsible for costs of any testing, cleanup, repair, down time loss, etc. that is a result of the Abatement Contractor's negligence, poor maintenance of isolated areas or improper procedures.

PART 2 PRODUCTS

2.1 MATERIALS

A. Plastic Sheet: Plastic sheet shall be flame-retardant polyethylene material sized in lengths and widths to minimize the frequency of joints. The minimum thickness shall be 6-mil.

B. Plastic Bags: Plastic bags shall be 6-mil polyethylene printed with warning labels per OSHA and EPA regulations.

C. Tape: Tape shall be capable of sealing joints of adjacent sheets of plastic; attaching plastic sheet to finished or unfinished surfaces of dissimilar materials; and adhering under dry and wet conditions, including use of amended water. Minimum of 2-inch-wide tape must be used.

D. Disposal Containers: Disposal containers shall be suitable to receive and retain any asbestos-containing or contaminated materials until disposal at an approved site. The containers shall be labeled in accordance with OSHA and EPA regulations. Containers must be both airtight and watertight, and have hard top, bottom, and sides.

E. Warning Labels and Signs: Warning labels and signs shall be posted as required by OR-OSHA, ODOT, and DEQ regulations.

F. Amended Water: Clean potable water containing a surfactant additive. The surfactant additive shall be 50 percent polyoxyethylene ether and 50 percent polyethylene ester, or equivalent, and shall be mixed with water at a concentration of one ounce surfactant to five gallons of water, or as recommended by the manufacturer in the case of an equivalent.

G. Encapsulants (Sealants): Encapsulants shall be of the bridging or penetrating variety and shall be listed as "satisfactory" by the EPA. Encapsulants shall provide a suitable substrate bonding agent for application of new material where appropriate. Penetrating Encapsulant: No. 207 Special Sealer #33775-27A as manufactured by Makus-Cincinnatus, Inc.; "Asbestop 30B-2" as manufactured by

Asbesco Corp.; "Cable Coating 22-P" as manufactured by American Coatings Corp., or approved. Bridging Encapsulant: Decadex Firecheck, manufacturer's standard color "Magnolia," as manufactured by Pentagon Plastics, Inc.; "Cable Coating 2-B," manufacturer's standard color gray, as manufactured by American Coatings Corp.; or approved.

H. Rewettable Lagging Cloth: Twelve ounce glass fabric lagging cloth saturated with dried lagging adhesive. "Dip-Lag" as manufactured by Claremont Co. or approved.

I. Enclosure: Protective plastic jacketing systems, framed gypsum board enclosures, suspended ceilings or other materials as specified elsewhere.

J. Other Materials: Provide all other materials such as lumber, nails, and hardware, which may be required to construct and dismantle the decontamination area, and the barriers that isolate the work area, and as required to complete the work, as specified.

2.2 TOOLS AND EQUIPMENT

A. Water Sprayer: The water sprayer shall be an airless or other low-pressure sprayer for amended water application.

B. Air-Purifying Equipment: Air-purifying equipment shall consist of high-efficiency particulate air (HEPA) filtration systems. No air movement system or air equipment shall discharge asbestos fibers outside the work area. Each unit shall be capable of variable volume from a minimum of 500 cubic feet per minute (CFM) to at least 1700 CFM under load and shall have at least two stages of pre-filtration ahead of the HEPA final filter. Each unit shall be overload protected, and equipped with an elapsed time indicator (hour meter), static pressure gauge with low flow alarm, and heat and smoke sensors that visually and audibly warn workers and shut unit fan down within 30 seconds. The units shall be: Micro-Trap Portable Air Filtration System manufactured by Asbestos Control Technology, Inc., "HOG 2000" Negative-air Protection System manufactured by Control Resource Systems, or approved.

C. Pressure Differential Monitoring Equipment: A combination sensing, alarm, and recording device shall be in operation at all times during use of the HEPA air-purifying equipment. The unit shall be a "Neg-A-Master," manufactured by Control Resource Systems, Inc., or approved.

D. Water-purifying Equipment: Water-purifying equipment shall be capable of removing all fibers longer than five microns, or as required by local regulations, from water used in abatement work and decontamination showers. Control Resource Systems, Inc. "AQUA-HOG" or approved.

E. Airless Sprayer: An airless sprayer, suitable for application of penetrating encapsulant material, shall be used.

F. Vacuum Equipment: All vacuum equipment used in the work area shall be High-efficiency Particulate Air (HEPA) equipment, and suitable for wet/dry usage.

G. Scaffolding: Scaffolding, as required to accomplish the specified work, shall meet all applicable safety regulations. All special scaffolding shall have drawings and calculations stamped and signed by a civil or structural engineer registered in the state of Oregon.

H. Transportation Equipment: Transportation equipment, as required, shall be suitable for loading, temporary storage, transit, and unloading of contaminated waste without exposure to persons or property. Equipment shall have a hard top, bottom, and sides. If equipment is rented, notify rental agency in advance, in writing, of intended use of equipment.

I. Electrical: Electrical tools, equipment, and lighting shall meet all applicable codes and regulations. Ground fault protection as required by OSHA, shall be in effect at all times. Contractor shall take all additional precautions and measures necessary to ensure a safe working environment during wet removal.

J. Glovebags: Bags shall be clean poly bags seamless at the bottom, with pre-printed asbestos warning labels, 6-mil PVC with attached TYVEK arms, and latex gloves. Bags shall be Profo' Bag manufactured by Asbestos Control Technology, Inc., or Asbest'O'Saf/SAC by Control Resource Systems, Inc., or approved.

K. Remote Filter Housing: Stainless steel housing shall have pre-filters and HEPA filter sealed to cabinet flanges by Century Equipment "Advance Guard II" or approved equal.

L. Other Tools and Equipment: Other suitable tools shall be provided for the removal, enclosure, encapsulation, patching, and disposal activities including, but not limited to, hand-held scrapers, wire brushes, sponges, and rounded-edge shovels.

PART 3 EXECUTION

3.1 FULL ISOLATION WORK AREA PREPARATION

A. Contractor shall perform the following isolation procedures in the order in which they are presented. Any alternative control measures considered for Class I/II work shall be performed in accordance with 29 CFR 1926.1101.

1. Shut down, remove filters, and isolate HVAC systems to prevent contamination and fiber dispersal. Coordinate with building users and CMGC prior to shutdown.

2. Coordinate all electrical, safety, and other service connections, requirements and equipment with the CMGC. Use a journeyman electrician at a minimum. It is the contractor's responsibility to verify operation of systems that will be shut off during abatement. If any system is found to be defective or not operating satisfactorily, the contractor shall notify the CMGC or environmental consultant in writing prior to shutoff.

3. Install critical barriers as follows: seal off all openings including, but not limited to, doorways, windows, and other penetrations of the work area with solid critical barriers except openings left for HEPA air-purification system, which shall be properly HEPA-filtered. Where doors exist, sealing may be done by closing door, sealing with tape on both sides, and then covering both sides with two layers of plastic sheeting.

4. Pre-clean movable objects, such as furniture and equipment to be removed (and carpeting), within the proposed work areas using HEPA-filtered vacuum equipment and/or wet cleaning methods as appropriate, and remove such objects from work areas to a temporary location, or consolidate such objects away from removal work and enclose with critical barriers.

5. Pre-clean fixed objects within the proposed work areas using HEPA-filtered vacuum equipment and/or wet cleaning methods as appropriate, and enclose with critical barriers. Equipment that must continue operating shall be enclosed and ventilated to avoid damage.

6. Set up the worker decontamination enclosure system (decon). Once this system is installed and abatement commences, it shall be used in the specified manner for the ingress and egress of all personnel and equipment, except in emergency situations. All personnel shall sign the Worksite Entry Logbook each time they pass in or out of the decontamination enclosure.

7. Install HEPA air-purifying equipment pressure differential fan system so as to ensure lower static pressure in the isolated work area than in surrounding areas, a flow of air through all parts of the isolated work area towards the air-purifying equipment, and minimum air contamination levels at abatement worker breathing zones. Discharge from air-purifying equipment shall be ducted outside the building. Use one or more units of capacity as recommended by the manufacturer for the volume of the isolated work area, but in no case shall airflow be less than six air changes every 60 minutes with a minimum pressure differential of 0.02 inches wg between the work area and the decon clean room.

8. Cover floor and wall surfaces with plastic sheeting sealed with tape. Cover floors first so that plastic extends at least 12 inches up on walls, then cover walls with plastic sheeting to overlap floor plastic by a minimum of 24 inches, thus overlapping the horizontal floor material by a minimum of 12 inches. Install additional layer of plastic sheeting on floor and walls in similar manner. Contractor may use mechanical fastening techniques, such as tack strips, as necessary to secure wall plastic sheeting. Contractor shall repair any damage resulting from mechanical fasteners.

9. Maintain emergency and fire exits from the work areas, or establish alternative exits satisfactory to the local building or fire department officials. Ensure that all exits remain unobstructed and well marked.

10. Adequate portable fire extinguishing equipment shall be maintained within work area as defined by OSHA and/or local fire department officials.

B. No asbestos abatement work shall occur unless the work area isolation has been found acceptable for Specification compliance by the environmental consultant.

C. Isolated work area enclosure system maintenance. The contractor shall be responsible for daily documentation of the following:

1. Prior to the first use, and at the beginning of each shift during abatement work, containments shall be given a complete visual inspection by the contractor's shift foreman and industrial hygienist. Inspection shall include the HEPA air-purification system and associated filters. A smoke tube test by the shift foreman shall then be made of the worker decontamination enclosure system and other critical areas to verify that the isolated area is under negative air pressure. Work shall not begin until all defects have been repaired.

2. Periodic inspections shall be made, as required, during each shift to assure continued proper functioning of the containment and HEPA system.

3.2 NON-ISOLATED WORK AREA PREPARATION

A. Contractor shall perform the following procedures in the order in which they are presented and describe procedures for glovebag work and other work in non-isolated work areas. Any alternative control measures considered for Class II work shall be performed in accordance with 29 CFR 1926.1101.

1. Shut down heating, ventilation, and air conditioning (HVAC) systems. Coordinate with building users and the CMGC prior to shutdown.

2. Restrict access to work area and post warning signs. Do not perform glovebag work or any abatement work in an occupied area.

3. Completely pre-clean entire work area using HEPA vacuum equipment or wet cleaning methods.

4. Set up the worker decontamination enclosure system. Once this system is installed and abatement commences, it shall be used in the specified manner for the ingress and egress of all personnel, except in emergency situations. All personnel shall sign the Worksite Entry Logbook each time they pass in or out of the decontamination enclosure.

5. At the direction of the environmental consultant, install HEPA exhaust fan in work area. Duct fan intake to immediate area of work in such a manner that any fibers released will be drawn away from the worker and into intake duct.

6. Cover floor and other surfaces below work area with 6-mil plastic sheeting. Seal openings and install curtained doorways and air locks as directed by the environmental consultant.

7. Have emergency cleanup equipment and supplies, including HEPA vacuum, amended water, disposal bags, mop, buckets, towels, and sponges on hand prior to start of abatement work.

B. No asbestos abatement work shall occur unless the work area has been found acceptable for Specification compliance by the environmental consultant or industrial hygiene technician.

3.3 REMOVAL OF ASBESTOS-CONTAINING MATERIALS IN FULL ISOLATION WORK AREAS

A. Contractor shall isolate work area as specified.

B. Remove all asbestos-containing vinyl floor tile as Class 1 friable asbestos removal.

1. Contractor shall spray the asbestos material with amended water. A fine spray of this solution shall be applied to prevent fiber disturbance preceding the removal of the asbestos material. The asbestos shall be sufficiently saturated to prevent emission of airborne fibers in excess of specified fiber levels.

2. Contractor shall remove asbestos material while damp and pack it in sealable containers. Containers shall be moved to bag load out facility or equipment room in the worker decontamination system.

3. Contractor shall collect all water used in the removal and cleaning process and dispose of as contaminated waste or filter to remove all fibers more than five microns in length before disposal in the municipal sewer system, or as required by local regulations. Water filters shall be disposed of as asbestos-contaminated material.

C. All wooden subfloor associated with asbestos-containing mastic shall be wholly removed and disposed of as asbestos waste in accordance with section 3.9, Disposal.

D. Contractor shall maintain a safe and uncluttered work area, worker decontamination system, and bag load out facility on a daily basis.

3.4 REMOVAL OF ASBESTOS-CONTAINING MATERIALS IN NON-ISOLATED AREAS

A. Contractor shall apply spray coat of amended water to material to be removed; material shall be kept damp during entire removal process.

B. Glovebag work shall be as follows. All removal using the glovebag method shall be performed strictly according to regulations, manufacturer's printed instructions, and as demonstrated by the manufacturer's representative or as further specified in this section. Workers are not to smoke or wear hand or wrist jewelry while using glovebags.

1. Contractor shall install port for hose of HEPA vacuum to create reduced pressure inside glovebag. Installing of fresh air intake and/or bridging to prevent collapse of bag are acceptable. Reduced pressure shall be maintained throughout entire abatement procedure.

2. During the removal phase, contractor shall use amended water to reduce potential for airborne fibers.

3. Contractor shall seal flap if used and, using a HEPA vacuum, remove all contaminated air in the upper chamber.

4. Contractor shall promptly double-bag the glovebag after removal is complete, place it into a sealed container, and remove to the bag holding enclosure.

C. Exterior door and window caulking shall be removed using the following methods:

1. Caulking shall be removed in a non-friable state. Caulking that is determined to be friable or which is rendered friable during the abatement process shall be removed using either containment or glovebag methods.

2. The contractor shall utilize wet methods during removal and packaging for disposal.

3. The contractor may utilize a heat gun if at any time the caulking has the potential to become friable during removal.

4. The contractor shall have HEPA vacuums available and shall use them during removal.

5. The use of abrasive or mechanical methods to remove the caulking is prohibited.

6. Burning or blistering of the caulk with excessive heat by the heat gun is prohibited.

7. All asbestos-containing caulk and building components with residual asbestos caulk shall be disposed of as asbestos-containing waste as specified below.

3.5 CLEANUP IN FULL ISOLATION WORK AREAS

A. At the conclusion of removal in the isolated work area, conduct cleanup in the sequence described below. Windows, doors, HVAC vents, etc. shall remain sealed and HEPA-filtered pressure differential fan systems shall remain in service.

1. REMOVE MATERIAL AND EQUIPMENT. Contractor shall remove visible accumulations of material and debris (including filters removed from HVAC equipment and HEPA air-purification equipment). Contractor shall include all sealed containers and equipment used in the work area in the cleanup, and remove them from work area after decontamination of outer surfaces.

2. FIRST CLEAN. Contractor shall clean all surfaces in the work area and any other contaminated areas with water and/or with HEPA-filtered vacuum equipment.

3. WAIT 24 HOURS. After the first cleaning of the work area, wait 24 hours to allow for settlement of dust. During this settling period, no entry to the work area shall be allowed.

4. SECOND CLEAN. Wet-clean or clean with HEPA-filtered vacuum equipment all surfaces in the work area. After completion of the second cleaning operation, perform a complete visual inspection of the work area to ensure that the work area is free of visible debris.

5. VISUAL INSPECTION. Prior to application of post-removal encapsulant, contact the environmental consultant for a visual observation of the work area. The work area shall be free of visible debris. Observation by the consultant does not alleviate the contractor of responsibility to provide work in compliance with Specifications. Contractor shall contact environmental consultant at least 24 hours prior to desired inspection time.

6. REMOVE PLASTIC SHEETING. After visual observation by the consultant, contractor shall apply a coat of approved encapsulant to all surfaces in the work area where asbestos has been removed and to disposable plastic sheeting as a post-removal encapsulant. Encapsulant application shall follow all applicable manufacturer's recommendations and shall provide a compatible bonding agent for application of new material.

7. FINAL CLEAN. After the encapsulation is complete, the contractor shall remove all noncritical plastic and clean all floors, walls, fixtures, and other surfaces within the work area with only critical barriers in place using wet methods or HEPA-filtered vacuum equipment. Plastic sheeting over carpets may remain in place.

8. CONTACT ENVIRONMENTAL CONSULTANT. Contact the environmental consultant for a visual observation of the work area. The work area shall be free of visible debris. Observation by the consultant does not alleviate the contractor of responsibility to provide work in compliance with Specifications. Contractor shall contact environmental consultant at least 24 hours prior to desired inspection time. Consultant shall conduct final air monitoring as specified after work area has been allowed sufficient time to dry.

9. TEARDOWN. When the final observation by the environmental consultant and air sampling test results are satisfactory, the contractor shall then remove the decontamination systems and remaining barriers.

10. DISPOSAL. Contractor shall properly dispose of all waste materials. All polyethylene material, tape, cleaning material, and contaminated clothing shall be double-bagged, sealed, and labeled as described above for asbestos waste material.

3.6 CLEANUP IN NON-ISOLATED WORK AREAS

A. FIRST CLEAN. Contractor shall remove visible accumulations of asbestos material and debris. All surfaces shall be cleaned within the affected work area. Cleaning shall be with amended water and/or HEPA-filtered vacuum equipment. In a large open area, the affected work area shall include the immediate work area and an area that encompasses at least 6 feet in all directions or as defined by the environmental consultant. In small work areas, the affected work area shall include the entire room.

B. AFFECTED AREA. The affected work area may be further defined in the scope of work by the environmental consultant. During the work, high fiber levels, as indicated by air monitoring results, may increase the area to be cleaned. The increase in the affected area due to high fiber levels or other indications of fiber dispersal will be defined by the environmental consultant, and the contractor shall bear all costs of additional cleaning.

C. VISUAL INSPECTION. After completion of the cleaning operation, the environmental consultant shall perform a visual observation of the affected work area to ensure that the affected work area is free of visible dust and debris. Observation by the consultant does not alleviate the contractor of responsibility to provide work in compliance with Specifications. Contractor shall contact environmental consultant at least 24 hours prior to desired inspection time.

D. ENCAPSULANT. After visual observation by the environmental consultant, contractor shall spray-apply encapsulant to the material substrate, all temporary plastic sheeting, and other temporary protective materials.

E. CLEARANCE SAMPLING. Post-abatement air sampling shall be at the discretion of the Environmental Consultant and will be determined by the ongoing sample results.

F. TEARDOWN. When the final observation by the environmental consultant and air sampling test results (if required) are satisfactory, the temporary plastic sheeting and other temporary protective materials shall be removed by the contractor.

G. DISPOSAL. Contractor shall properly dispose of all waste materials, all polyethylene material, tape, and cleaning material, and contaminated clothing shall be double-bagged, sealed, and labeled as described for asbestos waste material.

3.7 RE-ESTABLISHMENT OF OBJECTS AND SYSTEMS

A. When cleanup is complete, contractor shall:

1. Relocate objects moved to temporary locations in the course of the work to their former positions. Coordinate with the CMGC.

2. Clean, repair and/or repaint all surfaces soiled, discolored, or damaged by removal of tape, adhesive, or other work of this contract to match existing surfaces. The contractor shall bear all costs associated with damage incurred during the abatement, which includes, but is not limited to, perimeter plaster walls, wall murals, windows, and mullions

3. If the contractor uses caulking to seal cracks in concrete floor, the caulking must be removed to architect's satisfaction at completion of project.

4. Return mechanical, electrical, and other systems shut down by the contractor to complete and functional operation.

5. Re-secure objects removed in the course of work in their former positions, including air dampers in plenums, and adjust for proper operation.

6. Clean, repair and/or repaint all surfaces soiled, discolored, or damaged by removal of tape, adhesive, or other work of this contract to match adjacent surfaces.

3.8 DISPOSAL

A. Contractor shall affix warning labels having waterproof print and permanent adhesive to the lid and sides of all containers. Warning labels shall be conspicuous and legible, and contain the following words:

DANGER
CONTAINS ASBESTOS FIBERS
AVOID CREATING DUST
CANCER AND LUNG DISEASE HAZARD
AVOID BREATHING AIRBORNE ASBESTOS FIBERS

B. The contractor shall determine current waste handling, transportation, and disposal regulations for the work site and for each waste disposal landfill. The contractor must comply with these regulations and all US Department of Transportation, DEQ, and EPA requirements. Double-bagged material in containers shall be delivered to the pre-designated disposal site for burial. Labels and all necessary signs shall be in accordance with DEQ and OSHA standards.

C. Contractor shall remove decontaminated containers from the site as soon as possible. Notify disposal site in advance of delivery of material to assure immediate burial of containers.

D. If the bags are broken or damaged, or the container is contaminated, the contractor shall clean and decontaminate the entire container for reuse.

E. Contractor shall submit three copies of written proof of disposal at approved disposal site to the environmental consultant prior to completion of the abatement work specified in this section. Use copies of the DEQ Waste Shipment Record ASN-4, completely filled out and signed, and accompanied by tickets and/or receipts from disposal site.

END OF SECTION

SECTION 02 82 21 – OSHA REQUIREMENTS FOR REMOVAL OF MATERIALS WITH LESS THAN 1 PERCENT ASBESTOS

PART 1 GENERAL

1.1 SCOPE

A. All work shall be conducted in accordance with 29 CFR 1926.1101.

B. The following pertains to all contractors who will impact materials containing less than one percent (<1%) asbestos-containing materials. This includes demolition contractors, abatement contractors, and any other contractor whose work might disturb <1% materials. See hazardous materials survey report for a listing of materials containing <1% asbestos.

C. Less than 1% materials are not regulated by the Oregon Department of Environmental Quality (DEQ); however, some Oregon Occupational Safety and Health Administration (OSHA) regulations apply:

1. DEQ does not require use of a licensed abatement contractor, abatement notification, or disposal as hazardous waste.

2. OSHA requires training, air monitoring, and use of specific work practices.

1.2 RELATED SECTIONS

A. 02 82 13 Asbestos Abatement

B. 02 82 19 Asbestos Air Monitoring Requirements

PART 2 PRODUCTS

2.1 NOT APPLICABLE

PART 3 EXECUTION

3.1 PROCEDURES

A. All work shall comply with Oregon Administrative Rule (OAR) 437 1926.1101.

B. All work shall comply with air monitoring requirements as noted in OAR 437 1926.1101 and in Section 02 82 00, subsection 1.2 as contained within these specifications.

C. All work shall comply with recordkeeping requirements under OAR 437 1926.1101(n).

D. Impacting <1% asbestos-containing materials shall be performed using the following methods:

1. Wet methods to control employee exposures during impact activities.

2. Prompt clean-up with HEPA vacuum and wet methods in leak-tight containers.

3. No abrasive blasting, torch cutting, power sanders, or “dry” disc saws.

4. Wet cutting; cutting slurry must be captured in a containment dam.

5. No use of compressed air for cleanup activities.

6. Employee rotation may not be used as a means of reducing employee exposure.

7. Waste shall be packaged and handled in accordance with (OAR) 437 1926.1101.

E. Training shall be required for all who perform work in or around <1% materials:

1. The contractor shall bear costs associated with training and any air monitoring associated with working with asbestos materials.

2. All who work with or around asbestos (including <1% materials) shall be required to be notified of asbestos-related hazards per OSHA 1910.1200 hazard communication standard and to have received two-hour asbestos awareness training.

3. Workers performing small-scale, short-duration work on <1% materials may substitute the above training for OSHA Class II or III training.

4. All training shall be in accordance with EPA Model Accreditation Plan (MAP) asbestos abatement workers training (40 CFR Part 763, subpart E, appendix C).

END OF SECTION

SECTION 02 83 14 – LEAD RENOVATION, REPAIR AND PAINTING FOR CHILD OCCUPIED FACILITIES

PART 1 GENERAL

1.1 SCOPE

A. This section covers all contractors performing any task such as; sanding, patching, paint preparation, on-site chemical stripping, selective demolition, component removal, pressure washing, renovation activities or any task performed on painted or varnished surfaces which may result in the generation of lead dust or debris and potential lead exposures within a child occupied facility or target housing. Contractors shall perform work in accordance with the Environmental Protection Agency's (EPA) 40 CFR-745 subpart E, Renovation Repair and Painting (RRP) Program Rule.

B. In addition to all requirements bound within these specifications and applicable EPA regulatory requirements, the contractor is to follow all lead in construction industry standards as defined in Oregon OSHA OAR 437 Division 3 1926.62. This standard includes but is not limited to; personal protection requirements, exposure assessments, hygiene practices, training, housekeeping and recordkeeping.

C. Work requirements under this section include but are not limited to; development of a written lead work plan, training and dust control methodology.

D. Lead paint and varnish exists throughout the building. Unless noted otherwise, contractors are to assume all painted or varnished surfaces not tested to contain lead above 5,000 parts per million (PPM) or 1 milligram per centimeter squared.

E. Any Contractor that is subject to the Renovation, Repair and Painting (RRP) regulations and these specifications shall provide all labor, materials, equipment, and services, necessary to comply and complete the work.

F. In addition to the 40 CFR-745 Subpart E, the contractor is to also comply with the Oregon Pre-Renovation Education and Renovation, Repair and Painting Activities Involving Lead-Based Paint Rule (OAR 333-070)

   In general, both 40 CFR-745 and OAR 333-070 apply when;

   1. Renovation, repair, and painting occur in schools and child-occupied facilities built before 1978

   2. Where children 6 years of age and under occupy a building or part of a building for more than 6 hours per week

   3. Renovation, repair, and painting disturb paint with lead content above 5,000 ppm or 1 mg/cm^2

G. The Contractor is required to implement dust control methods that minimize the creation or spreading of lead dust and in a manner that protects the occupants of the building and the general public.

1.2 RELATED WORK

A. The Owner may retain an Environmental Consultant to perform the following for quality control purposes:

1. Take and analyze air, surface wipe, soil and waste disposal samples before, during and after lead work activities.

2. Observe work by the General Contractor and sub-contractors.

3. Evaluate contractor work practices and monitor the Contractor's compliance with regulatory and specification requirements.

1.3 COMMUNICATION OF HAZARDS

A. All Contractors and Subcontractors working on this site are to be aware of the presence of lead in painted and coated surfaces. Any work that impacts painted or coated surfaces shall comply with the applicable regulatory requirements and this specification.

B. The Contractor is to distribute the EPA's "Renovate Right" pamphlet with important lead hazard information to families, childcare providers and schools.

1.4 DEFINITIONS

A. Atomic Absorption: A method of measuring elements such as lead. The lead is vaporized at high temperature, usually several thousand degrees, and light of a very specific wavelength is shined through the vapor.

B. Biological Monitoring: The analysis of a person's blood and/or urine, to determine the level of lead contamination in the body.

C. Child-Occupied Facility: a building, or portion of a building, constructed prior to 1978, visited regularly by the same child, under 6 years of age, on at least two different days within any week (Sunday through Saturday period), provided that each day's visit lasts at least 3 hours and the combined weekly visits last at least 6 hours, and the combined annual visits last at least 60 hours. Child-occupied facilities may include, but are not limited to, day care centers, preschools and kindergarten classrooms. Child-occupied facilities may be located in target housing or in public or commercial buildings. With respect to common areas in public or commercial buildings that contain child-occupied facilities, the child-occupied facility encompasses only those common areas that are routinely used by children under age 6, such as restrooms and cafeterias. Common areas that children under age 6 only pass through, such as hallways, stairways, and garages are not included. In addition, with respect to exteriors of public or commercial buildings that contain child-occupied facilities, the child-occupied facility encompasses only the exterior sides of the building that are immediately adjacent to the child-occupied facility or the common areas routinely used by children under age 6.

D. Cleaning Verification Card: A card developed and distributed, or otherwise approved, by EPA for the purpose of determining, through comparison of wet and dry disposable cleaning cloths with the card, whether post-renovation cleaning has been properly completed.

E. Component or Building Component: Specific design or structural elements or fixtures of a building or residential dwelling that are distinguished from each other by form, function, and location. These include, but are not limited to, interior components such as: Ceilings, crown molding, walls, chair rails, doors, door trim, floors, fireplaces, radiators and other heating units, shelves, shelf supports, stair treads, stair risers, stair stringers, newel posts, railing caps, balustrades, windows and trim (including sashes, window heads, jambs, sills or stools and troughs), built in cabinets, columns, beams, bathroom vanities, counter tops, and air conditioners; and exterior components such as: Painted roofing, chimneys, flashing, gutters and downspouts, ceilings, soffits, fascias, rake boards, cornerboards, bulkheads, doors and door trim, fences, floors, joists, lattice work, railings and railing caps, siding, handrails, stair risers and treads, stair stringers,

columns, balustrades, windowsills or stools and troughs, casings, sashes and wells, and air conditioners.

F. Dry disposable cleaning cloth: A commercially available dry, electrostatically charged, white disposable cloth designed to be used for cleaning hard surfaces such as uncarpeted floors or counter tops.

G. Engineering Controls: Measures implemented at the work site to contain, control and/or otherwise reduce exposure to lead dust and debris.

H. Firm: A company, partnership, corporation, sole proprietorship or individual doing business, association, or other business entity; a Federal, State, Tribal, or local government agency; or a nonprofit organization.

I. HEPA Vacuum: A vacuum cleaner which has been designed with a high-efficiency particulate air (HEPA) filter as the last filtration stage. A HEPA filter is a filter that is capable of capturing particulates of 0.3 microns with 99.97% efficiency. The vacuum cleaner must be designed so that all the air drawn into the machine is expelled through the HEPA filter with none of the air leaking past it. HEPA vacuums must be operated and maintained in accordance with the manufacturer's instructions.

J. Interim Controls: A set of measures designed to temporarily reduce human exposure or likely exposure to lead-based paint hazards, including specialized cleaning, repairs, maintenance, painting, temporary containment, ongoing monitoring of lead-based paint hazards or potential hazards, and the establishment and operation of management and resident education programs.

K. Minor repair and maintenance activities are activities, including minor heating, ventilation or air conditioning work, electrical work, and plumbing, that disrupt 6 square feet or less of painted surface per room for interior activities or 20 square feet or less of painted surface for exterior activities where none of the work practices prohibited or restricted by §745.85(a)(3) are used and where the work does not involve window replacement or demolition of painted surface areas. When removing painted components, or portions of painted components, the entire surface area removed is the amount of painted surface disturbed. Jobs, other than emergency renovations, performed in the same room within the same 30 days must be considered the same job for the purpose of determining whether the job is a minor repair and maintenance activity.

L. Painted Surface: a component surface covered in whole or in part with paint or other surface coatings.

M. Pamphlet: the EPA pamphlet titled Renovate Right: Important Lead Hazard Information for Families, Child Care Providers and Schools developed under section 406(a) of TSCA for use in complying with section 406(b) of TSCA, or any State or Tribal pamphlet approved by EPA pursuant to 40 CFR 745.326 that is developed for the same purpose. This includes reproductions of the pamphlet when copied in full and without revision or deletion of material from the pamphlet (except for the addition or revision of State or local sources of information).

N. Recognized Test Kit: a commercially available kit recognized by EPA under §745.88 as being capable of allowing a user to determine the presence of lead at levels equal to or in excess of 1.0 milligrams per square centimeter, or more than 0.5% lead by weight, in a paint chip, paint powder, or painted surface.

O. Renovation: The modification of any existing structure, or portion thereof, that results in the disturbance of painted surfaces, unless that activity is performed as part of an abatement as defined by this part (40 CFR 745.223). The term renovation includes (but is not limited to): The removal, modification or repair of painted surfaces or painted components (e.g., modification of

painted doors, surface restoration, window repair, surface preparation activity (such as sanding, scraping, or other such activities that may generate paint dust)); the removal of building components (e.g., walls, ceilings, plumbing, windows); weatherization projects (e.g., cutting holes in painted surfaces to install blown-in insulation or to gain access to attics, planing thresholds to install weather-stripping), and interim controls that disturb painted surfaces. A renovation performed for the purpose of converting a building, or part of a building, into target housing or a child-occupied facility is a renovation under this subpart. The term renovation does not include minor repair and maintenance activities.

P. Renovator: An individual who either performs or directs workers who perform renovations. A certified renovator is a renovator who has successfully completed a renovator course accredited by EPA or an EPA-authorized State or Tribal program.

Q. Training Hour: at least 50 minutes of actual learning, including, but not limited to, time devoted to lecture, learning activities, small group activities, demonstrations, evaluations, and hands-on experience.

R. Wet disposable cleaning cloth: A commercially available, pre-moistened white disposable cloth designed to be used for cleaning hard surfaces such as uncarpeted floors or counter tops.

S. Vertical containment: A vertical barrier consisting of plastic sheeting or other impermeable material over scaffolding or a rigid frame, or an equivalent system of containing the work area. Vertical containment is required for some exterior renovations but it may be used on any renovation.

T. Wet mopping system: A device with the following characteristics: A long handle, a mop head designed to be used with disposable absorbent cleaning pads, a reservoir for cleaning solution, and a built-in mechanism for distributing or spraying the cleaning solution onto a floor, or a method of equivalent efficacy.

U. Work area: The area that the certified renovator establishes to contain the dust and debris generated by a renovation.

1.5 SUBMITTALS AND NOTICES

A. The Contractor shall submit the following information to the Environmental Consultant and District 10 days prior to beginning work on the project.

1. Worker Training Program. Submit written proof indicating that employees impacting lead-based paint have received training as specified in 40 CFR 745.90.

2. Copy of firm RRP Certification from the State of Oregon, Oregon Health Authority.

3. Lead Work Plan. Submit written procedures, satisfactory to the Owner and Environmental Consultant incompliance with these specifications and applicable regulations describing the following that includes, but is not limited to:

a. Exposure and dust controls methodology to protect employees, building occupants and the general public;

b. Housekeeping procedures and cleaning practices;

c. Criteria for the establishment of a regulated work area and signage.

4. Product Information/Safety Data Sheets. Submit complete product information for any materials and products for which the Contractor requests approval for use on this job.

B. Contractor shall not begin work until submittals are complete, reviewed and accepted by the owner. Allow a ten (10) day review period.

C. During the work the Contractor shall submit all sampling and clearance data.

D. Closeout Documents. Within 10 days after the completion of the project and prior to final payment the contractor is required to submit a renovation report prepared by a certified renovator including the following:

1. Start and completion dates of project.

2. The name and address of each certified person conducting the renovation and the name of each supervisor assigned to the project.

3. A detailed written description of the project, including all of the following:

a. Renovation methods used.

b. Locations of rooms and components where renovation, repair and painting occurred.

c. Results of testing, visual inspection and cleaning verification.

1.6 QUALITY ASSURANCE

A. Periodic monitoring of air and surface dust may be analyzed by the owner's representative in occupied spaces and containment areas for quality control purposes. The following lead exposure limits shall apply to all areas where lead renovation, repair and painting procedures are undertaken.

1. Dust Samples: (Expected levels at completion of paint prep and/or demolition)
10 µg/ft^2 - Stripped surfaces, components, etc.
10 µg/ft^2 - Floors
100 µg/ft^2 - Interior windowsills
400 µg/ft^2 - Window troughs
Note: The Owner Representative may modify these standards, if appropriate.

2. Dispose of as Hazardous Waste:
5 ppm Pb (analyzed as "leachable" using Toxicity Characteristic Leachate Procedure - TCLP EPA Method 1311)

3. Soil:
400 ppm – High traffic areas
1,200 ppm – Non traffic areas in areas not accessible to the public.

4. Waste Water: (0.7 mg/L lead or less to dispose of in the sanitary sewer) Verify with the City Municipality on local requirements.

B. If, at any time during the work, analysis of occupied wipe samples taken by the Contractor, Owner, or Owner's representative, indicates a concentration in excess of the allowable maximums specified, the contractor shall immediately notify:

1. The Owner Project Manager

2. The Environmental Consultant:
   PBS Engineering and Environmental Inc.
   503-248-1939

C. Immediately upon being notified of concentrations exceeding the specified maximum allowable levels, the Contractor shall perform the following steps in the order presented, at no additional cost to the Owner:

1. Stop lead related work.

2. Determine the affected area and affected adjacent areas considered to be contaminated and determine the actions to be taken.

3. Modify work procedures, if feasible and make other changes determined to be the possible cause of high lead concentrations.

4. Carefully resume work under close supervision and monitoring.

5. The Contractor shall be responsible for costs of any testing, cleanup, repair, down time loss, etc., that is a result of the Contractor's negligence, poor maintenance of containment areas, or improper procedures.

D. Training – RRP

1. Prior to commencement of work, Contractor shall ensure all workers have been adequately trained as specified in 40 CFR 745.90.

E. Building Security and Protection

1. The Contractor shall post adequate warning signs at all potential entrances to work areas as required by EPA.

2. Contractor shall protect all existing fixed equipment; existing building finishes, exterior vegetation and flower beds, sidewalks and other exterior surfaces that are to remain. Extra precautions are to be taken in protecting existing electrical panels, light fixtures, etc. Any contamination or damage to existing building, grounds, services, and/or equipment shall be remedied by the Contractor at his/her expense.

3. Contractor shall maintain access and use of existing fire lanes.

1.7 SAFETY

A. With regard to the work of this contract, the safety of the Contractor's employees, the Owner's employees, and the public is the sole responsibility of the Contractor.

1.8 LIABILITY

A. The Contractor is an independent contractor and not an employee of the Owner. The Owner shall have no liability to the Contractor or any third persons for Contractor's failure to faithfully perform and follow the provisions of these specifications and the requirements of the governing agencies. Notwithstanding the failure of the Owner to discover a violation by the Contractor of any of the provisions of these Specifications or regulatory requirements or to require the Contractor to fully perform and follow any of them, such failure shall not constitute a waiver of

any of the requirements of these specifications which shall remain fully binding upon the Contractor.

1.9 PROTECTION

A. Damaged or deteriorating materials or equipment shall not be used and shall be removed from the premises by the Contractor. Materials that become contaminated with lead shall clean to an acceptable clearance level or be disposed of in accordance with the applicable regulations.

1.10 SUBCONTRACTORS

A. Any Subcontractors employed by the Contractor shall be bound to all the work and safety standards specified elsewhere in this Specification. Subcontractor's personnel shall be fully trained and supervised by the Contractor during performance of this work.

PART 2 PRODUCTS

2.1 MATERIALS

A. Plastic Sheet: Plastic sheet shall be fire-retardant polyethylene material sized in lengths and widths to minimize the frequency of joints. The minimum thickness shall be 6 mil.

B. Plastic Bags: Plastic bags shall be 6-mil polyethylene printed with warning labels per OSHA and EPA regulations.

C. Tape: Tape shall be capable of sealing joints of adjacent sheets of plastic and for attachment of plastic sheet to finished or unfinished surfaces of dissimilar materials and capable of adhering under dry and wet conditions, including use of amended water.

D. Disposal Containers: Disposal containers for all listed hazardous waste shall be ODOT-approved #1-A2 55-gallon steel drums.

E. Warning Labels and Signs: Warning labels and signs shall be posted as required by OR-OSHA, ODOT, EPA and DEQ regulations.

F. Chemical Strippers: Use of chemical strippers shall require review and approval from the Environmental Consultant and the Owner.

2.2 TOOLS AND EQUIPMENT

A. Water Sprayer: The water sprayer shall be an airless or other low-pressure sprayer for high phosphate wash water application.

B. Scaffolding: Scaffolding, as required to accomplish the specified work, shall meet all applicable safety regulations. All special scaffolding shall have drawings and calculations stamped and signed by a civil or structural engineer registered in the state of Oregon.

C. Electrical: Electrical tools, equipment and lighting shall meet all applicable codes and regulations. Ground fault protection as required by OSHA, shall be in effect at all times. Contractor shall take all additional precautions and measures necessary to insure a safe working environment during wet removal.

D. HEPA Vacuum Equipment: High efficiency particulate air (absolute) filtered vacuuming equipment with a filter system capable of collecting and retaining asbestos fibers. Filters of 99.97% efficiency for retaining fibers of 0.3 microns in length or larger shall be installed for filtering discharge air.

PART 3 EXECUTION

3.1 WORK PRACTICE STANDARDS

A. Standards for renovation activities. Renovations must be performed by certified firms using certified renovators as directed in §745.89. The responsibilities of certified firms are set forth in §745.89(d) and the responsibilities of certified renovators are set forth in §745.90(b).

B. Occupant protection: Firms must post signs clearly defining the work area and warning occupants and other persons not involved in renovation activities to remain outside of the work area. To the extent practicable, these signs must be in the primary language of the occupants. These signs must be posted before beginning the renovation and must remain in place and readable until the renovation and the post-renovation cleaning verification have been completed. If warning signs have been posted in accordance with 24 CFR 35.1345(b)(2) or 29 CFR 1926.62(m), additional signs are not required by this section.

C. Containing the work area: Before beginning the renovation, the firm must isolate the work area so that no dust or debris leaves the work area while the renovation is being performed. In addition, the firm must maintain the integrity of the containment by ensuring that any plastic or other impermeable materials are not torn or displaced, and taking any other steps necessary to ensure that no dust or debris leaves the work area while the renovation is being performed. The firm must also ensure that containment is installed in such a manner that it does not interfere with occupant and worker egress in an emergency.

1. Interior Renovation Preparation:

a. Remove all objects from the work area, including furniture, rugs, and window coverings, or cover them with plastic sheeting or other impermeable material with all seams and edges taped or otherwise sealed.

b. Close and cover all ducts opening in the work area with taped-down plastic sheeting or other impermeable material.

c. Close windows and doors in the work area. Doors must be covered with plastic sheeting or other impermeable material. Doors used as an entrance to the work area must be covered with plastic sheeting or other impermeable material in a manner that allows workers to pass through while confining dust and debris to the work area.

d. Cover the floor surface, including installed carpet, with taped-down plastic sheeting or other impermeable material in the work area 6 feet beyond the perimeter of surfaces undergoing renovation or a sufficient distance to contain the dust, whichever is greater. Floor containment measures may stop at the edge of the vertical barrier when using a vertical containment system consisting of impermeable barriers that extend from the floor to the ceiling and are tightly sealed at joints with the floor, ceiling and walls.

2. Exterior Renovation Preparation:

a. Close all doors and windows within 20 feet of the renovation. On multi-story buildings, close all doors and windows within 20 feet of the renovation on the same floor as the renovation, and close all doors and windows on all floors below that are the same horizontal distance from the renovation.

b. Ensure that doors within the work area that will be used while the job is being performed are covered with plastic sheeting or other impermeable material in a manner that allows workers to pass through while confining dust and debris to the work area.

c. Cover the ground with plastic sheeting or other disposable impermeable material extending 10 feet beyond the perimeter of surfaces undergoing renovation or a sufficient distance to collect falling paint debris, whichever is greater, unless the property line prevents 10 feet of such ground covering. Ground containment measures may stop at the edge of the vertical barrier when using a vertical containment system.

d. If the renovation will affect surfaces within 10 feet of the property line, the renovation firm must erect vertical containment or equivalent extra precautions in containing the work area to ensure that dust and debris from the renovation does not contaminate adjacent buildings or migrate to adjacent properties. Vertical containment or equivalent extra precautions in containing the work area may also be necessary in other situations in order to prevent contamination of other buildings, other areas of the property, or adjacent buildings or properties.

3. Set-up Activities for Hydro Blasting. Prior to hydro blasting impact of lead-containing painted components, Contractor shall cover and plug any ground drains, cover the ground below the work area with 6-mil reinforced plastic sheeting or equivalent. The drop-sheeting shall extend outward a minimum of 10 feet from the location of item(s) being hydro blasted, or a length sufficient to collect all water spray. Dams shall be installed around the perimeter of the sheeting to aid in collecting waste water. Any tears that occur in the drop-sheeting shall be immediately repaired with duct tape or other acceptable seal. Debris shall be collected with a wet/dry vacuum to avoid escape from the drop-sheeting. Wash water shall be retained on the drop-sheeting and removed by mops or wet/dry vacuums. The residue/debris and water shall be placed in storage tanks/drums for testing prior to disposal.

D. Prohibited and restricted practices. The work practices listed below are prohibited or restricted during a renovation as follows:

1. Open-flame burning or torching of painted surfaces is prohibited.

2. The use of machines designed to remove paint or other surface coatings through high speed operation such as sanding, grinding, power planing, needle gun, abrasive blasting, or sandblasting, is prohibited on painted surfaces unless such machines have shrouds or containment systems and are equipped with a HEPA vacuum attachment to collect dust and debris at the point of generation. Machines must be operated so that no visible dust or release of air occurs outside the shroud or containment system.

3. Operating a heat gun on painted surfaces is permitted only at temperatures below 1,100 degrees Fahrenheit.

E. Waste from renovations.

1. Waste from renovation activities must be contained to prevent releases of dust and debris before the waste is removed from the work area for storage or disposal. If a chute is used to remove waste from the work area, it must be covered.

2. At the conclusion of each work day and at the conclusion of the renovation, waste that has been collected from renovation activities must be stored under containment, in an

enclosure, or behind a barrier that prevents release of dust and debris out of the work area and prevents access to dust and debris. Waste generated from lead abatement projects, or other projects that disturb lead containing materials, shall be segregated into the following three waste streams:

a. Solid waste generated from surface preparation activities (e.g. paint chips, dust)

b. Other solid waste (e.g. plastic sheeting, protective clothing)

c. Liquid waste (e.g. wastewater, TSP solution)

3. When the firm transports waste from renovation activities, the firm must contain the waste to prevent release of dust and debris.

F. Cleaning the work area. After the renovation has been completed, the firm must clean the work area until no dust, debris or residue remains.

1. Collect all paint chips and debris and, without dispersing any of it, seal this material in a heavy-duty bag.

2. Remove the protective sheeting. Mist the sheeting before folding it, fold the dirty side inward, and either tape shut to seal or seal in heavy-duty bags. Sheeting used to isolate contaminated rooms from non-contaminated rooms must remain in place until after the cleaning and removal of other sheeting. Dispose of the sheeting as waste.

3. Additional cleaning for interior renovations. The firm must clean all objects and surfaces in the work area and within 2 feet of the work area in the following manner, cleaning from higher to lower.

4. Walls. Clean walls starting at the ceiling and working down to the floor by either vacuuming with a HEPA vacuum or wiping with a damp cloth.

5. Remaining surfaces. Thoroughly vacuum all remaining surfaces and objects in the work area, including furniture and fixtures, with a HEPA vacuum. The HEPA vacuum must be equipped with a beater bar when vacuuming carpets and rugs.

6. Wipe all remaining surfaces and objects in the work area, except for carpeted or upholstered surfaces, with a damp cloth. Mop uncarpeted floors thoroughly, using a mopping method that keeps the wash water separate from the rinse water, such as the 2-bucket mopping method, or using a wet mopping system.

G. Standards for post-renovation visual inspection and cleaning verification

1. A certified renovator must perform a visual inspection to determine whether dust, debris or residue is still present. If dust, debris or residue is present, these conditions must be removed by re-cleaning and another visual inspection must be performed.

2. After a successful visual inspection, a certified renovator must:

a. Verify that each windowsill in the work area has been adequately cleaned, using the following procedure.

1) Wipe the windowsill with a wet disposable cleaning cloth that is damp to the touch. If the cloth matches or is lighter than the cleaning verification card, the windowsill has been adequately cleaned.

2) If the cloth does not match and is darker than the cleaning verification card, re-clean the windowsill as directed in paragraphs (a)(5)(ii)(B) and (a)(5)(ii)(C) of this section, then either use a new cloth or fold the used cloth in such a way that an unused surface is exposed, and wipe the surface again. If the cloth matches or is lighter than the cleaning verification card, that windowsill has been adequately cleaned.

3) If the cloth does not match and is darker than the cleaning verification card, wait for 1 hour or until the surface has dried completely, whichever is longer.

4) After waiting for the windowsill to dry, wipe the windowsill with a dry disposable cleaning cloth. After this wipe, the windowsill has been adequately cleaned.

b. Wipe uncarpeted floors and countertops within the work area with a wet disposable cleaning cloth. Floors must be wiped using an application device with a long handle and a head to which the cloth is attached. The cloth must remain damp at all times while it is being used to wipe the surface for post-renovation cleaning verification. If the surface within the work area is greater than 40 square feet, the surface within the work area must be divided into roughly equal sections that are each less than 40 square feet. Wipe each such section separately with a new wet disposable cleaning cloth. If the cloth used to wipe each section of the surface within the work area matches the cleaning verification card, the surface has been adequately cleaned.

c. If the cloth used to wipe a particular surface section does not match the cleaning verification card, re-clean that section of the surface as directed in paragraphs (a)(5)(ii)(B) and (a)(5)(ii)(C) of this section, then use a new wet disposable cleaning cloth to wipe that section again. If the cloth matches the cleaning verification card, that section of the surface has been adequately cleaned.

d. If the cloth used to wipe a particular surface section does not match the cleaning verification card after the surface has been re-cleaned, wait for 1 hour or until the entire surface within the work area has dried completely, whichever is longer.

e. After waiting for the entire surface within the work area to dry, wipe each section of the surface that has not yet achieved post-renovation cleaning verification with a dry disposable cleaning cloth. After this wipe, that section of the surface has been adequately cleaned.

f. When the work area passes the post-renovation cleaning verification, remove the warning signs.

H. Exteriors. A certified renovator must perform a visual inspection to determine whether dust, debris or residue is still present on surfaces in and below the work area, including windowsills and the ground. If dust, debris or residue is present, these conditions must be eliminated and another visual inspection must be performed. When the area passes the visual inspection, remove the warning signs.

I. Optional dust clearance testing. Cleaning verification need not be performed if the contract between the renovation firm and the person contracting for the renovation or another Federal, State, Territorial, Tribal, or local law or regulation requires:

1. The renovation firm to perform dust clearance sampling at the conclusion of a renovation covered by this subpart.

2. The dust clearance samples are required to be collected by a certified inspector, risk assessor or dust sampling technician.

3. The renovation firm is required to re-clean the work area until the dust clearance sample results are below the clearance standards in §745.227(e)(8) or any applicable State, Territorial, Tribal, or local standard.

3.2 WASTE DISPOSAL

A. In the United States, the Resource Conservation and Recovery Act (RCRA) of 1976 led to establishment of federal standards for the disposal of solid waste and hazardous waste. RCRA requires that industrial wastes and other wastes must be characterized following testing protocols published by the Environmental Protection Agency (EPA). The Toxic Characteristic Leaching Procedure (TCLP) is one of these tests.

B. Water Testing: Stir the water in the tank/drum and immediately obtain a 1 to 2-liter-size sample from each tank/drum of water to be disposed of. If a laboratory test (EPA Lead 7241) indicates lead levels below levels established by the waste water treatment district, discharge to the Sanitary Sewer is permitted. Contractor is required to notify the Water treatment district when tests show higher levels, re-filter the water until tests show levels are acceptable for discharge. The contractor shall assume that all liquid waste is lead containing and shall be disposed of in accordance with the requirements of the waste water treatment district. No waste water or wash water shall be disposed of deposited in the municipal waste water or system without prior testing. No waste water or wash water regardless of testing results will be allowed to be deposited in the storm sewer system.

C. Concentrated paint chip waste for this project requires Toxic Characteristic Leaching Procedure (TCLP) for the determinations of whether a solid waste is classified as a hazardous substance via EPA Method 1311.

D. General Waste in Oregon: Disposal of building demolition waste coated with lead based paint will generally not require a hazardous waste determinations (i.e.,TCLP testing) if demolition debris is disposed of at a solid waste landfill that is permitted by DEQ and which meets the current design standards for municipal solid waste disposal facilities of 40 CFR Part 258. Please refer to the DEQ's Hazardous Waste Reduction Policy and follow all requirements under the Oregon DEQ, Management of Building Demolition Waste, 97-002 for proper disposal of lead-based painted demolition waste.

END OF SECTION

Attachment A

LAUREL ELEMENTARY SCHOOL SEISMIC RETROFIT

BID AND PERMIT SET

LAUREL ELEMENTRY SCHOOL
1401 LAUREL ST,
JUNCTION CITY, OR 97448

PROJECT NOTES

1. ALL EXISTING CONDITIONS, DIMENSIONS AND ELEVATIONS SHALL BE FIELD VERIFIED. THE CONTRACTOR SHALL NOTIFY THE PROJECT TEAM OF ANY SIGNIFICANT DISCREPANCIES FROM CONDITIONS SHOWN ON THE DRAWINGS.
2. THE GENERAL CONTRACTOR SHALL BE RESPONSIBLE FOR ALL CONSTRUCTION MEANS AND METHODS. RESPONSIBILITY SHALL INCLUDE BUT NOT LIMITED TO DEMOLITION AND CONSTRUCTION MEANS AND METHODS, TECHNIQUES, SEQUENCING, AND SAFETY REQUIRED TO COMPLETE CONSTRUCTION.
3. BEFORE STARTING A SECTION OF WORK THE CONTRACTOR SHALL CAREFULLY EXAMINE PREPARATORY WORK THAT HAS BEEN EXECUTED. ENSURE THAT WORK AND ADJACENT RELATED WORK WILL FINISH TO PROPER PLANES AND LEVELS.
4. CONTRACTOR SHALL BE RESPONSIBLE FOR PROVIDING ALL MATERIALS AND WORKMANSHIP IN ACCORDANCE WITH ALL APPLICABLE FEDERAL, STATE, AND LOCAL CODES.
5. CONTRACTOR IS RESPONSIBLE FOR CHECKING ALL CONTRACT DOCUMENTS, FIELD CONDITIONS, AND DIMENSIONS FOR ACCURACY AND CONFIRMING THAT WORK IS BUILDABLE AS SHOWN BEFORE PROCEEDING WITH THE CONSTRUCTION. IF THERE ARE ANY QUESTIONS, THE CONTRACTOR IS RESPONSIBLE FOR OBTAINING A CLARIFICATION FROM THE PROJECT TEAM BEFORE PROCEEDING WITH THE WORK IN QUESTION OR RELATE WORK.
6. THE CONTRACTOR SHALL NOT SCALE DRAWINGS. WRITTEN DIMENSIONS SHALL ALWAYS GOVERN. CONTRACTOR REQUIRING DIMENSIONS NOT NOTED SHALL ALWAYS CONTACT THE PROJECT TEAM FOR SUCH INFORMATION PRIOR TO PRECEDING WITH WORK RELATED TO THOSE DIMENSIONS
7. THE CONTRACTOR SHALL PROTECT, PATCH, AND REPAIR TO MATCH ANY WALLS, FLOORS, CEILINGS, AND/OR OTHER SURFACES WHICH MAY BE DISTURBED DURING THE INSTALLATION OF MECHANICAL, ELECTRICAL, PLUMBING OR OTHER OWNER WORK.
8. THE CONTRACTOR SHALL BE RESPONSIBLE FOR ALL CUTTING AND PATCHING REQUIRED FOR PROPER INSTALLATION OF MATERIAL AND EQUIPMENT. PROVIDE DEMOLITION AND PATCH/REPAIR IN ALL AREAS (WHETHER SPECIFICALLY SHOWN OR NOT) TO ACCOMMODATE ALL WORK.
9. IF THE CONTRACTOR ENCOUNTERS A CONDITION NOT COVERED IN THE CONSTRUCTION DOCUMENTS, THE CONTRACTOR SHALL NOTIFY AND RESOLVE THE ISSUE WITH THE PROJECT TEAM BEFORE COMMENCING ANY WORK.
10. ALL PERMITS ASSOCIATED WITH THE PROJECT SHALL BE PAID AND OBTAINED BY THE CONTRACTOR.
11. DIMENSIONS ARE TO FACE OF FRAMING UNLESS OTHERWISE NOTED.
12. GENERAL CONTRACTOR SHALL BE SOLELY AND COMPLETELY RESPONSIBLE FOR JOB CONDITIONS OF THE JOB SITE, INCLUDING SAFETY OF PERSONS AND PROPERTY AND COMPLIANCE WITH OSHA SAFETY STANDARDS.
13. WHEN PORTIONS OF THE WORK ARE PERFORMED BY THE CONTRACTOR ON A DESIGN-BUILD BASIS, THE CONTRACTOR SHALL BE SOLELY RESPONSIBLE FOR THE DESIGN OF SUCH SYSTEMS AND FOR THE SECURING OF ALL ASSOCIATED PERMITS. THE CONTRACTOR SHALL BE RESPONSIBLE FOR THE COORDINATION OF ALL DESIGN BUILD SUB CONTRACTORS .
14. CONTRACTOR SHALL AVOID INTERFERENCE AND CONFLICT WITH THE BUILDING'S NORMAL OPERATION. CONTRACTOR TO COMPLY WITH THE BUILDING RULES AND REGULATIONS REGARDING SCHEDULING AND USE OF ELEVATORS AND LOADING DOCKS FOR DELIVERY AND HANDLING OF MATERIALS, EQUIPMENT, AND DEBRIS.
15. ALL KEY NOTES INDICATE NEW ITEMS TYPICALLY UNLESS NOTED OTHERWISE
16. CONTRACTOR SHALL BE RESPONSIBLE FOR ASHREA COMPLIANCE IN SCHOOL, RETAIL, AND OFFICE SPACES
17. ABATEMENT REPORT WAS PERFORMED BY "XXX" DATED "XXX". DOCUMENT IS ON FILE FOR CONTRACTOR REVIEW PRIOR TO DEMOLITION.

ABBREVIATIONS

A.B.	ANCHOR BOLT
ACI	AMERICAN CONCRETE INSTITUTE
A.C.T.	ACOUSTICAL CEILING TILE
A.F.F.	ABOVE FINISHED FLOOR
AISC	AMERICAN INSTITUTE OF STEEL CONSTRUCTION
ARCH.	ARCHITECT
ASCE	AMERICAN SOCIETY OF CIVIL ENGINEERS
ASTM	AMERICAN SOCIETY FOR TESTING AND MATERIALS
AWS	AMERICAN WELDING SOCIETY
BD.	BOARD
BITUM.	BITUMINOUS
BOT./B.O.	BOTTOM/BOTTOM OF
B.O.D.	BASIS OF DESIGN
CER.	CERAMIC
C.G.	CORNER GUARD
C.I.	CONTINUOUS INSULATION
C.J.	CONTROL JOINT
CJP	COMPLETE JOINT PENETRATION
CL	CENTERLINE
CLR.	CLEAR
CMU	CONCRETE MASONRY UNIT
C.O.	CASED OPENING
CONC.	CONCRETE
CONN.	CONNECTION
CONST.	CONSTRUCTION
CONT.	CONTINUOUS
CORR.	CORRIDOR
CPT.	CARPET
C.T.	CERAMIC TILE
DBA	DEFORMED BAR ANCHOR
D.F.	DRINKING FOUNTAIN
DIA., ø	DIAMETER
DR.	DOOR
D.S.	DOWNSPOUT
(E)	EXISTING
ELEC.	ELECTRICAL
EQ.	EQUAL
EXT.	EXTERIOR
F.A.	FIRE ALARM
F.D.	FLOOR DRAIN
FDN.	FOUNDATION
F.O.F	FACE OF FINISH
F.O.S.	FACE OF STUDS
F.S.D.	FIRE SEPARATION DISTANCE
FTG.	FOOTING
Ga.	GAUGE
GALV.	GALVANIZED
GL	GRID LINE
GLB	GLULAM BEAM
G.B.	GRAB BAR
GND.	GROUND
GSM	GALVANISED SHEET METAL
GYP.	GYPSUM
GYP. BD.	GYPSUM WALL BOARD
H.B.	HOSE BIBB
H.C.	HOLLOW CORE
H.M.	HOLLOW METAL
HORIZ.	HORIZONTAL
HPC	HIGH PERFORMANCE COATING
HSS	HOLLOW STRUCTURAL STEEL
IBC	INTERNATIONAL BUILDING CODE
IN.	INCH
INT.	INTERIOR
K	KIPS
KSF	KIPS PER SQUARE FOOT
KSI	KIPS PER SQUARE INCH
LAM.	LAMINATE
LB.	POUND
L.L.	LIVE LOAD
LLH	LONG LEG HORIZONTAL
LLV	LONG LEG VERTICAL
LOC.	LOCATION
LONG.	LONGITUDINAL
L.P.	LOW POINT
LVF	LOW VELOCITY FASTENER
MAX.	MAXIMUM
MBMA	METAL BUILDING MANUFACTURERS ASSOCIATION
M.E.	MATCH EXISTING
MECH.	MECHANICAL
MFR.	MANUFACTURER
MIN.	MINIMUM
MISC.	MISCELLANEOUS
MTD.	MOUNTED
MUL.	MULLION
(N)	NEW
N.I.C.	NOT IN CONTRACT
NOM.	NOMINAL
N.T.S.	NOT TO SCALE
OBS.	OBSCURE
o.c.	ON CENTER
O.F.C.I.	OWNER FURNISHED CONTRACTOR INSTALLED
O.F.D.	OVERFLOW DRAIN
O.F.O.I.	OWNER FURNISHED OWNER INSTALLED
OH.	OPPOSITE HAND
OHD	OVERHEAD DOOR
OPP.	OPPOSITE
OWJ	OPEN WEB JOIST
PAF	POWDER ACTUATED FASTENER
PVC	PRECAST (CONCRETE)
PCF	POUNDS PER CUBIC FOOT
PL	PLATE
P.LAM.	PLASTIC LAMINATE
PLAS.	PLASTER
PLY	PLYWOOD
PJP	PARTIAL JOINT PENETRATION
PSF	POUNDS PER FOOT
PSI	POUNDS PER INCH
P/T	POST-TENSIONED
P.T.	PRESSURE TREATED
R.C.P.	REFLECTED CEILING PLAN
R.D.	ROOF DRAIN
REF.	REFERENCE
REINF.	REINFORCING
REQ'D.	REQUIRED
RL	RELOCATE
R.O.	ROUGH OPENING
RWD.	REDWOOD
REV.	REVERSED
S.A.M.	SELF-ADHERED MEMBRANE
S.C.	SOLID CORE
SCHED.	SCHEDULE
SIM.	SIMILAR
SLRS	SEISMIC LOAD RESISTING SYSTEM
S.O.G.	SLAB ON GRADE
SPEC.	SPECIFICATION
SQ.	SQUARE
S.S.	STAINLESS STEEL
SSMA	STEEL STUD MANUFACTURERS ASSOCIATION
STD.	STANDARD
STRUCT.	STRUCTURAL
S.T.S.	SELF TAPPING SCREW\
SYM.	SYMMETRICAL
THRU	THROUGH
TYP.	TYPICAL
T & G	TONGUE AND GROOVE
THK.	THICK
TJ	TRUSS JOIST
TRANS.	TRANSVERSE
T.W.	TOP OF WALL
U.N.O.	UNLESS NOTED OTHERWISE
U.T.	ULTRASONIC TESTING
VERT.	VERTICAL
V.I.F.	VERIFY IN FIELD
w/	WITH
w/o	WITHOUT
WF	WIDE FLANGE
W.P.	WORK POINT

PROJECT SCOPE

SEISMIC RETROFIT OF EXISTING CLASSROOM, CAFFETERIA, BOILER ROOM, AND ADMINISTRATIVE SPACES. SEISMIC STRENGTHENING INCLUDES THE INSTALLATION OF A NEW PLYWOOD DIAPHRAGM AT THE MAIN ENTRANCE. IN-PLANE AND DRAG MEMBERS WILL BE INTRODUCED TO EFFICIENTLY TRANSFER LOADS TO DESIGNATED SHEAR WALL LOCATIONS. PLYWOOD SHEATHING WILL BE INSTALLED ON EXISTING EXTERIOR AND INTERIOR WOOD-FRAMED WALLS TO REDUCE THE SPANS OF THE EXISTING STRAIGHT-SHEATHED DIAPHRAGM. FOOTINGS WILL BE INCORPORATED WHERE NECESSARY. A NEW SEISMIC GAP WILL BE IMPLEMENTED TO ISOLATE THE STRUCTURE FROM ADJACENT OUT-OF-SCOPE BUILDING PARTS. A SEISMIC ISOLATION GAP IS NOT REQUIRED AT THE MEDIA CENTER WALLS, AS THERE IS A NATURAL HINGE THAT ALLOWS FOR INDEPENDENT MOVEMENT BETWEEN THE STRUCTURES.

PROJECT TEAM

OWNER:
JUNCTION CITY SCHOOL DISTRICT
www.junctioncity.k12.or.us
1401 LAUREL STREET
JUNCTION CITY, OR 97488
T 541.998.6311
TROY STOOPS, SUPERINTENDENT

ARCHITECT:
SODERSTROM ARCHITECTS, LTD.
www.sdra.com
1331 NW LOVEJOY ST, SUITE 775
PORTLAND, OR 97209
T 503.228.5617
MARLENE GILLIS, PRINCIPAL

STRUCTURAL ENGINEER:
ZCS ENGINEERING & ARCHITECTURE
www.zcsea.com
524 MAIN STREET, SUITE 2
OREGON CITY, OR 97045
T 503.659.2205
MATTHEW SMITH, PE, SE
ENGINEER OF RECORD

CODE SUMMARY

GOVERNING CODES AND STANDARDS

- 2022 OREGON STRUCTURAL SPECIALTY CODE
- 2022 OREGON FIRE CODE
- 2023 OREGON PLUMBING SPECIALTY CODE
- 2022 OREGON MECHANICAL SPECIALTY CODE
- 2023 OREGON ELECTRICAL SPECIALTY CODE
- 2017 ANSI 117.1 GUIDELINES FOR ACCESSIBLE BUILDINGS
- ASHRAE 90.1-2019

PROPERTY DESCRIPTION

PARCEL:	1504311106000
ZONE:	PL - PUBLIC LAND
JURISDICTION:	JUNCTION CITY, OREGON

TYPE AND CLASSIFICATION

CONSTRUCTION:	V-B
FIRE PROTECTION:	ALARMED, NON-SPRINKLERED

PLUMBING FIXTURE COUNTS

NO REVISIONS TO OCCUPANCY OR PLUMBING FIXTURE COUNTS

BUILDING HEIGHT AND AREA (EXISTING)

NO REVISIONS TO EXISTING BUILDING AREA OR HEIGHT

NUMBER OF STORIES: 1 BUILDING AREA: 51,170 SF
ALLOWABLE STORIES: 1

BUILDING HEIGHT: +/- 24 FEET
ALLOWABLE HEIGHT: 40 FEET

SITE

NO REVISIONS TO EXISTING SITE OR PARKING

PARCEL SIZE:	NO REVISIONS
LANDSCAPING:	NO REVISIONS
PARKING SPACES:	NO REVISIONS
ADA SPACES:	NO REVISIONS
VAN SPACES:	NO REVISIONS

USE AND OCCUPANCY

NO REVISIONS TO EXISTING USE AND OCCUPANCY

OCCUPANCY TYPE:	E - EDUCATION (K-12)
NUMBER OF EXITS:	NO REVISIONS
TRAVEL DISTANCE:	200 FEET MAX
DEAD END CORRIDOR:	50 FEET MAX

SHEET INDEX

-GENERAL-
G0.00 COVER SHEET
G1.01 PROJECT INFO

-CIVIL-
C1.00 CIVIL SITE PLAN

-DEMO-
AD2.01 DEMOLITION FLOOR PLANS
AD2.02 DEMOLITION ROOF PLANS
AD3.01 DEMOLITION EXTERIOR ELEVATIONS
AD6.01 DEMOLITION OVERALL RCP

-ARCHITECTURAL-
A0.11 ASSEMBLIES AND FINSH SCHEDULE
A1.01 ARCHITECTURAL SITE PLAN
A2.01 PARTIAL FLOOR PLANS, TYPES, AND SCHEDULE
A2.02 PARTIAL ROOF PLANS
A3.01 EXTERIOR ELEVATIONS
A3.11 BUILDING SECTIONS
A3.21 WALL SECTIONS AND DETAILS
A5.01 INTERIOR ELEVATIONS
A6.01 PARTIAL REFLECTED CEILING PLAN
A8.21 EXTERIOR DETAILS
A8.22 EXTERIOR DETAILS

-STRUCTURAL-
S0.10 STRUCTURAL GENERAL NOTES
S0.20 SPECIAL INSPECTIONS AND TESTING
S1.10 FOUNDATION PLAN
S2.10 ROOF FRAMING PLAN
S4.10 FOUNDATION DETAILS
S6.10 ROOF FRAMING DETAILS
S6.11 ROOF FRAMING DETAILS
S6.12 ROOF FRAMING DETAILS
S6.13 ROOF FRAMING DETAILS
S6.14 ROOF FRAMING DETAILS

DESIGN-BUILD NARRATIVE

SUBMITTALS TO BE PROVIDED BY GENERAL CONTRACTOR & M.E.P. SUB-CONTRACTORS TO THE AHJ FOR FINAL APPROVAL OF BUILDING PERMIT.

DESIGN BUILD SCOPE:
*FURTHER MODIFICATION MAY BE REQUIRED. G.C. & SUB-CONTRACTORS TO VERIFY EXISTING CONDITIONS & PROVIDE CODE REQUIRED MEP DESIGN TO MODIFIED AREAS OF WORK.

MECHANICAL:
1. PROVIDE FLEXIBLE DUCTWORK FOR ALL MECHANICAL SYSTEMS THAT CROSS THE ISOLATION JOINT.

ELECTRICAL:
1. PROVIDE FLEXIBLE CONDUIT FOR ALL ELECTRICAL SYSTEMS THAT CROSS THE ISOLATION JOINT.

PLUMBING:
1. PROVIDE FLEXIBLE PIPING FOR ALL WATER SYSTEMS THAT CROSS THE ISOLATION JOINT.

VICINITY MAP

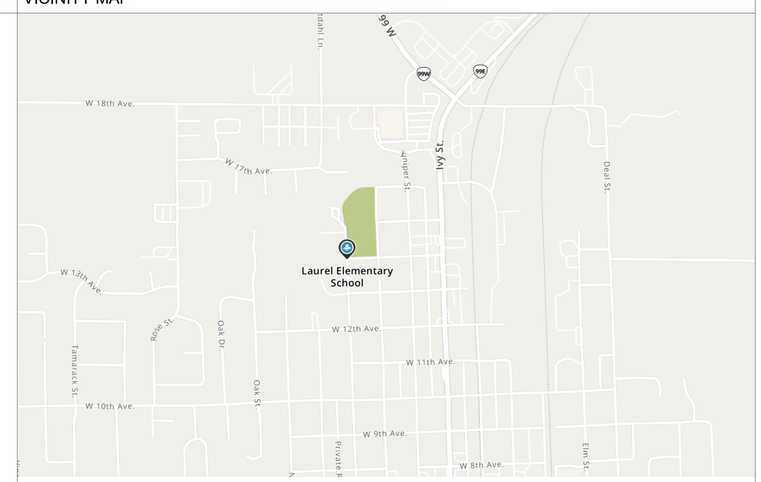

SITE MAP

These drawings are provided for general reference only to illustrate the project's scope and character.
They are issued solely for informational purposes during the qualifications phase and must not be used for estimating, bidding, or construction.

The documents may be revised or clarified prior to any future solicitation. By accessing them, proposers acknowledge that the District makes no representation or warranty as to their accuracy or completeness and assumes no liability for their use.

ZCS
524 Main Street, Suite 2
Oregon City, OR 97045
503.659.2205

LAUREL ELEMENTRY SCHOOL
1401 LAUREL ST,
JUNCTION CITY, OR 97448

LAUREL ELEMENTARY SCHOOL SEISMIC RETROFIT

REGISTERED PROFESSIONAL ENGINEER
OREGON
JULY 08, 2025
MATTHEW R. SMITH
EXPIRES: 06-30-26

△	DESCRIPTION	DATE:

PROJECT NO.	P-2973-24
DRAWN:	SJL
CHECKED:	EJT
DATE:	09-19-2025

COVER SHEET

G0.00

BID AND PERMIT SET

ONE INCH EQUALS FULL SCALE 9/17/2025 2:46:22 PM Autodesk Docs://P2973 Laurel ES Classrooms & Cafeteria/P2973_STRUCT_R23.rvt

Attachment A

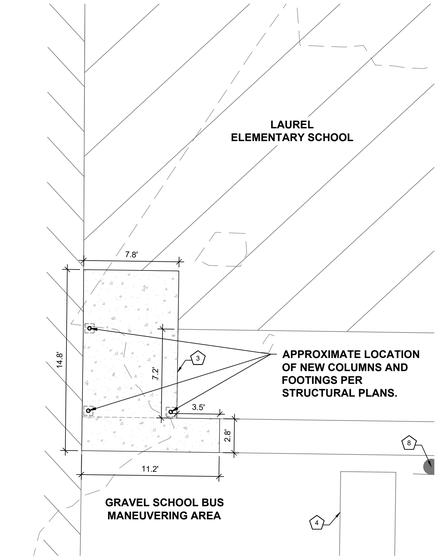

2 C1.00 **WEST DETAILED PAVING PLAN** 1"=5'

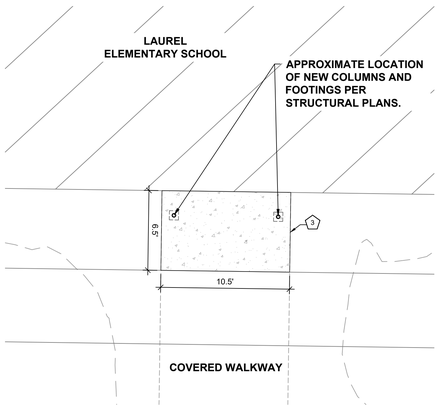

3 C1.00 **SOUTH DETAILED PAVING PLAN** 1"=5'

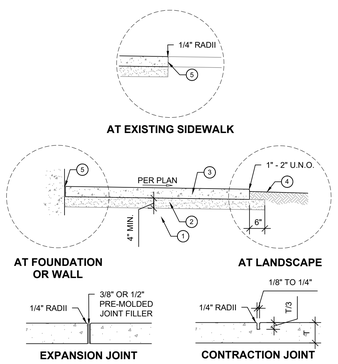

KEY NOTES:
1. APPROVED SUBGRADE.
2. 3/4" MINUS STRUCTURAL FILL PLACED IN MAX. 8" LOOSE LIFTS PER ODOT SPEC O2630.10. EACH LIFT COMPACTED TO 92% MAX DRY DENSITY PER ASTM D1557 (MODIFIED PROCTOR).
3. UNREINFORCED CONCRETE SIDEWALK, 3,500 PSI, 4" THICK.
4. MATCH EXISTING LANDSCAPING.
5. EXPANSION JOINT.

NOTES:
1. SIDEWALK PANELS TO BE GENERALLY SQUARE.
2. PROVIDE EXPANSION JOINTS AROUND POLES, COLUMNS, AND OTHER FIXTURES.
3. PROVIDE CONTRACTION JOINTS AT CURB RAMPS AND AT LOCATION OF EXISTING JOINTS.

4 C1.00 **SIDEWALK SECTION** NTS

ONE INCH EQUALS FULL SCALE

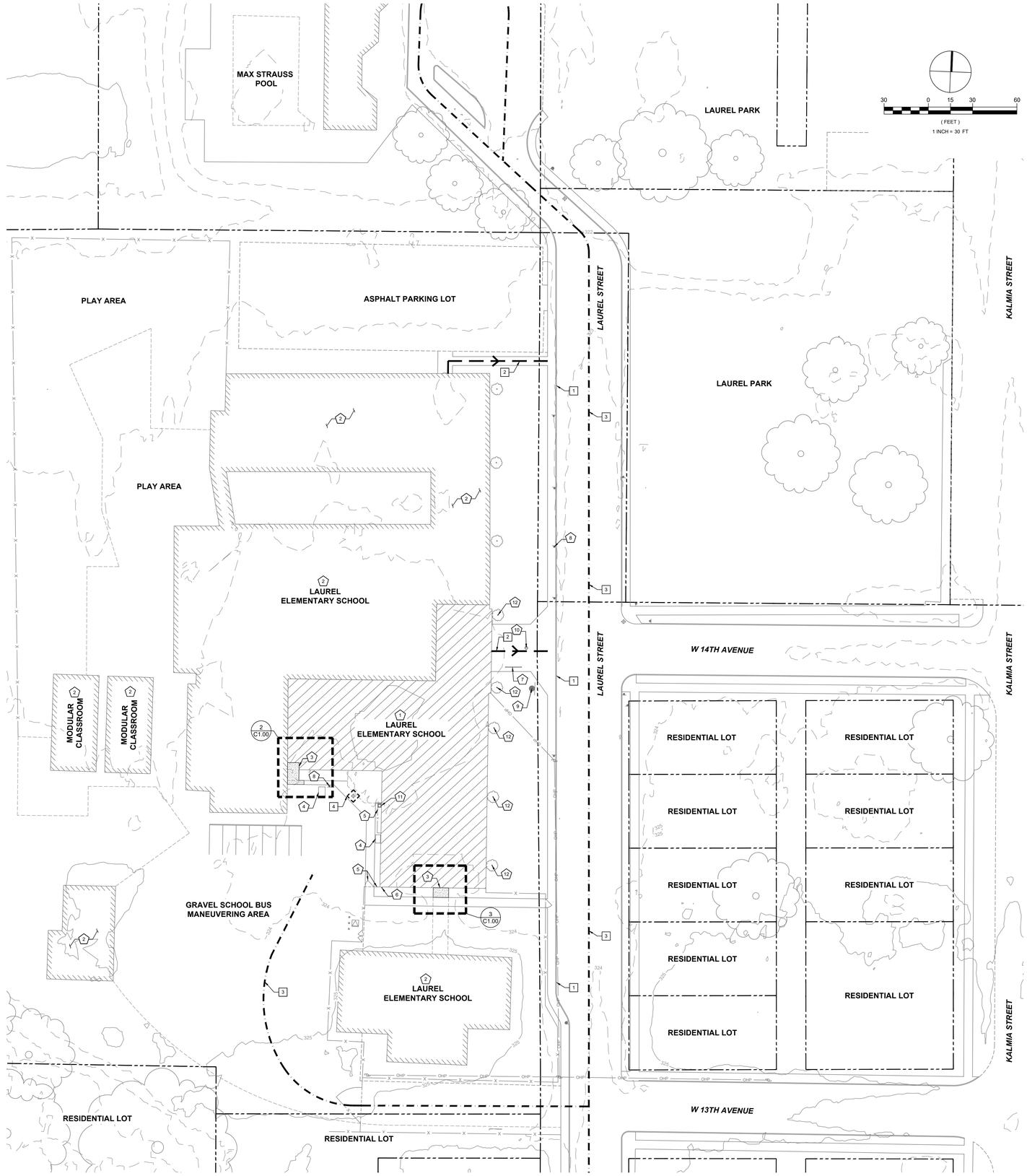

1 C1.00 **CIVIL SITE PLAN** 1"=30'

GENERAL INFORMATION

APPLICANT / OWNER:	JUNCTION CITY SCHOOL DISTRICT 325 MAPLE STREET, JUNCTION CITY, OR 97448 (541) 998-6311
ENGINEER:	MATT SMITH, PE, SE ZCS ENGINEERING & ARCHITECTURE 524 MAIN STREET, SUITE 2 OREGON CITY, OR 97045 (503) 659-2205
SITE LOCATION:	1401 LAUREL STREET, JUNCTION CITY, OR 97448 T15S-R04W-S31
TAX LOT:	6000
LOT SIZE:	±10.18 ACRES
ZONING:	PL - PUBLIC LAND

GENERAL NOTES:

CONTRACTOR SHALL COORDINATE VEHICULAR AND PEDESTRIAN ACCESS REQUIREMENTS WITH OWNER PRIOR TO CONSTRUCTION.

ALL EXISTING PAVING, STRUCTURES, APPURTENANCES, ETC. SHALL BE PROTECTED THROUGHOUT CONSTRUCTION UNLESS NOTED OTHERWISE.

ADJUST BUILDING ADJACENT LANDSCAPING AS REQUIRED TO ENSURE BRICK WEEP HOLES DRAIN FREELY AND AWAY FROM BUILDING FOOTPRINT.

PORTLAND CEMENT CONCRETE AND ITS PLACEMENT SHALL CONFORM TO THE 2024 OREGON STANDARD SPECIFICATIONS FOR CONSTRUCTION.

CONSTRUCTION NOTES:
1. LIMITS OF SEISMIC RETROFIT WORK ON EXISTING BUILDING. SEE STRUCTURAL AND ARCHITECTURAL PLANS FOR ALL INFORMATION.
2. BUILDING TO REMAIN. NO WORK IN THIS AREA.
3. APPROXIMATE LIMITS OF SIDEWALK REPLACEMENT TO FACILITATE STRUCTURAL IMPROVEMENTS. REMOVE SIDEWALK TO NEAREST FULL PANEL AND REPLACE PER 4/C1.00. MATCH EXISTING GRADES, SCORING, DIMENSIONS, AND FINISH.
4. CONTRACTOR TO COORDINATE TEMPORARY RELOCATION OF RECYCLING BINS AND TRASH DUMPSTER PRIOR TO CONSTRUCTION.
5. SALVAGE AND REPLACE CHAIN LINK FENCING, AND GATES WHERE APPLICABLE, AS NECESSARY TO FACILITATE STRUCTURAL IMPROVMENTS.
6. REMOVE EXISTING METAL POST. CONTRACTOR TO VERIFY FUNCTION PRIOR TO DEMOLITION AND COORDINATE WITH ENGINEER FOR DIRECTIVE IF REMOVAL IS NOT FEASIBLE.
7. PROTECT EXISTING BICYCLE PARKING.
8. PROTECT EXISTING SIGN, TYPICAL.
9. PROTECT EXISTING TOTEM POLE.
10. PROTECT EXISTING FLAG POLE.
11. PROTECT EXISTING GAS METER AND ASSOCIATED LINES.
12. PROTECT EXISTING SHRUB OR TREE, TYPICAL.

STAGING, ACCESS, EROSION, AND SEDIMENT CONTROL NOTES:
1. PARENT DROP-OFF AREA. CONTRACTOR TO ENSURE DROP OFF ROUTE IS UNOBSTRUCTED DURING STUDENT PICK-UP AND DROP-OFF TIMES.
2. ROUTE TO ACCESSIBLE PARKING AND R.O.W SIDEWALK. CONTRACTOR TO MAINTAIN REQUIRED EGRESS ROUTES DURING CONSTRUCTION.
3. FIRE ACCESS LANE, CONTRACTOR TO KEEP CLEAR AT ALL TIMES. COORDINATE ANY CLOSURES OR FIRE ACCESS IMPACTS WITH FIRE DEPARTMENT PRIOR TO IMPACTING FIRE ACCESS ROUTES.
4. PROVIDE INLET PROTECTION AT EXISTING ON-SITE CATCH BASINS.

LEGEND

EXISTING

HATCHES, LINE TYPES, AND SYMBOLS:
- BUILDING - LIMITS OF RETROFIT SCOPE
- BUILDING - OUT OF RETROFIT SCOPE
- PROPERTY LINE
- 325 SURFACE CONTOUR - MAJOR
- 324 SURFACE CONTOUR - MINOR
- BUILDING OVERHANG
- CURB
- X FENCING
- PLAY AREA
- SIDEWALK
- STRIPING
- EDGE OF PAVEMENT
- OHP OVERHEAD POWER
- TREE - DECIDUOUS
- CATCH BASIN
- FIRE HYDRANT
- POWER TRANSFORMER
- SIGN / TOTEM POLE
- BOLLARD / FLAG POLE

STAGING, ACCESS, AND ESC

HATCHES, LINE TYPES, AND SYMBOLS:
- TEMPORARY CONTRACTOR STAGING AREA
- 'ADA' ACCESS/EGRESS ROUTE
- FIRE ACCESS LANE
- SEISMIC IMPROVEMENTS TO BUILDING EXTERIOR
- INLET PROTECTION - CATCH BASIN

DRAFTING NOTE:

EXISTING HARDSCAPE, UTILITIES, AND TOPOGRAPHY ILLUSTRATED IN THESE PLANS ARE APPROXIMATED BASED ON MAPS OBTAINED FROM LANE COUNTY, SATELLITE IMAGERY, AND NOAA LIDAR. LAYOUT AND DIMENSIONS INDICATED ARE NOT TO BE RELIED UPON AS EXACT OR COMPLETE. ALL LINES AND ALIGNMENTS WITHIN THE PROJECTED WORK ZONE SHALL BE FIELD VERIFIED AS REQUIRED PRIOR TO CONSTRUCTION. REPORT TO ENGINEER IN THE EVENT OF DISCREPANCIES.

EROSION CONTROL NOTE:

THIS DRAWING CONTAINS AN EROSION AND SEDIMENT CONTROL PLAN THAT MUST BE IMPLEMENTED PRIOR TO AND DURING COMMENCEMENT OF CONSTRUCTION ACTIVITIES. THE INFORMATION CONTAINED WITHIN THE REFERENCED DRAWING SHALL BE CONSIDERED A MINIMUM AND SHALL BE MODIFIED AS REQUIRED BY THE CONTRACTOR AND AGENCY INSPECTOR TO CONTAIN ALL SEDIMENT ON SITE. SPECIAL ATTENTION SHALL BE TAKEN AT ALL EXISTING CATCH BASINS AND CHANNELS AS TO ELIMINATE ANY SEDIMENT TRANSFER INTO THE EXISTING STORM DRAIN SYSTEM.

RESTORATION STATEMENT:

CONTRACTOR SHALL RESTORE BACK TO ORIGINAL CONDITION, PRIOR TO CONTRACT COMPLETION, ALL DISTURBED SURFACES IMPACTED DURING CONSTRUCTION. THIS INCLUDES, BUT IS NOT LIMITED TO, CONSTRUCTION ACCESS, SIDEWALKS, CURBS, ASPHALT, LAWN, AND LANDSCAPE AREAS. DISTURBED AREAS TO BE GRADED SMOOTH AND ADEQUATELY SLOPED TO DRAIN. AREA SHALL BE CLEAN AND FINISH GRADED BEFORE FINAL DEMOBILIZATION. COORDINATE WITH ENGINEER AND OWNER AT THE TIME OF PROJECT CONSTRUCTION COMPLETION.

ATTENTION:
OREGON LAW REQUIRES YOU TO FOLLOW RULES ADOPTED BY THE OREGON UTILITY NOTIFICATION CENTER. THOSE RULES ARE SET FORTH IN OAR 952-001-0010 THROUGH 952-001-0090. YOU MAY OBTAIN COPIES OF THE RULES BY CALLING THE CENTER. (NOTE: THE TELEPHONE NUMBER FOR THE OREGON UTILITY NOTIFICATION CENTER IS (503 232-1987).

ZCS
524 Main Street, Suite 2
Oregon City, OR 97045
503.659.2205

LAUREL ELEMENTARY SCHOOL
1401 LAUREL ST,
JUNCTION CITY, OR 97448

LAUREL ELEMENTARY SCHOOL SEISMIC RETROFIT

REGISTERED PROFESSIONAL ENGINEER
70894PE
March 13, 2026
MATTHEW R. SMITH
EXPIRES: 06-30-26

△	DESCRIPTION	DATE:

PROJECT NO:	P-2973-24
DRAWN:	MRL
CHECKED:	BJD
DATE:	09-19-2025

CIVIL SITE PLAN

C1.00

BID & PERMIT SET

Attachment A

ARCHITECTURAL PROJECT NOTES

1. THE CONSTRUCTION CONTRACT IS FOR THE CONSTRUCTION OF A COMPLETE AND FULLY FUNCTIONING INSTALLATION. THESE DOCUMENTS DESCRIBE THE DESIGN INTENT AND SPECIFIC REQUIREMENTS OF THE INSTALLATION. THESE DOCUMENTS DO NOT INTEND TO SHOW EVERY ITEM REQUIRED TO CONSTRUCT THE WORK. ITEMS SUCH AS FASTENERS, CONNECTORS, FILLERS, MISCELLANEOUS CLOSURE ELEMENTS, ANCILLARY CONTROL WIRING AND POWER WHERE REQUIRED FOR THE CONTROL OR OPERATION OF THE PROVIDED EQUIPMENT ARE NOT ALWAYS SHOWN BUT ARE CONSIDERED INCLUDED IN THE SCOPE OF THE WORK. IT IS THE RESPONSIBILITY OF THE CONTRACTOR TO PROVIDE A FULLY FUNCTIONING INSTALLATION WHICH MEETS THE DESIGN INTENT, INCLUDING THE SPECIFIC REQUIREMENTS INCLUDED IN THESE DOCUMENTS.
2. THESE DOCUMENTS DESCRIBE A SINGLE CONSTRUCTION CONTRACT. THE USE OF SUBCONTRACTORS IS THE ELECTION OF THE CONTRACTOR. THESE DOCUMENTS DO NOT INTEND TO DIVIDE THE WORK AMONG THE CONTRACTOR'S SUBCONTRACTORS. WHERE THE DOCUMENTS IDENTIFY WORK WHICH IS "NOT IN MECHANICAL WORK" OR "NOT IN ELECTRICAL WORK" IT MEANS THAT WORK IS NOT FURTHER DESCRIBED OR SPECIFIED IN THE MECHANICAL OR ELECTRICAL DRAWINGS OR SPECIFICATIONS. IT DOES NOT PRECLUDE THE CONTRACTOR FROM DELEGATING THE WORK TO THE ENTITIES OF HIS ELECTION. IN ADDITION THE DIVISION OF THE CONTRACT DOCUMENTS INTO ARCHITECTURAL, STRUCTURAL, MECHANICAL, ELECTRICAL AND OTHER DESIGN DISCIPLINES NEITHER DIVIDES THE WORK FOR THOSE DISCIPLINES AS SHOWN ONLY IN THOSE DRAWINGS OR SPECIFICATIONS.
3. UNLESS OTHERWISE NOTED, IT IS THE RESPONSIBILITY OF THE GENERAL CONTRACTOR AND THE SUBCONTRACTORS TO REVIEW ALL DRAWINGS, PROJECT MANUAL, ADDENDA, ETC. IN ORDER TO ASSURE THE COORDINATION OF ALL WORK AFFECTING EACH TRADE. FAILURE TO REVIEW AND COORDINATE ALL CONTRACT DOCUMENTS BY THE GENERAL CONTRACTOR WITH ALL THE SUBCONTRACTORS FOR APPLICABLE ITEMS OF THE WORK SHALL NOT RELIVE THE RESPONSIBLE PARTY FROM PERFORMING ALL WORK SO REQUIRED AS PART OF THE CONTRACT.
4. UNLESS OTHERWISE NOTED, THE PROJECT MANUAL, WHICH INCLUDES THE GENERAL CONDITIONS, SUPPLEMENTAL CONDITIONS, AND TECHNICAL SPECIFICATIONS, AND THE DRAWINGS ARE COMPLEMENTARY AND TOGETHER DESCRIBE THE PROJECT REQUIREMENTS. WHERE THERE ARE DISCREPANCIES BETWEEN THE PROJECT MANUAL AND THE DRAWINGS, THE CONTRACTOR SHALL ADVISE THE ARCHITECT AND REQUEST A CLARIFICATION.
5. UNLESS OTHERWISE NOTED, THE CONTRACTOR SHALL LAYOUT AND SEQUENCE THE INSTALLATION OF THE WORK SO THAT THE DIFFERENT SYSTEMS DO NOT OBSTRUCT THE INSTALLATION OF SUCCESSIVE WORK. IN GENERAL, SYSTEMS INSTALLED FIRST SHOULD BE KEPT AS HIGH AND TIGHT TO STRUCTURE AS POSSIBLE TO LEAVE SPACE AVAILABLE FOR SYSTEMS WHICH FOLLOW.
6. REFER TO THE PROJECT MANUAL FOR SPECIFICATIONS, GENERAL INFORMATION, PRODUCTS AND EXECUTION REQUIREMENTS. REQUIREMENTS OF THE SPECIFICATIONS APPLY TO ALL ASPECTS OF THE WORK AND ARE INCLUDED AS ADDITIONAL INFORMATION FOR EACH ITEM SPECIFIED. IF DISCREPANCIES EXISTS BETWEEN THE SPECIFICATIONS AND DRAWINGS, THE MORE STRINGENT REQUIREMENTS SHALL PREVAIL. THE GENERAL CONTRACTOR SHALL NOTIFY THE OWNER'S REPRESENTATIVES OF ANY DISCREPANCIES.
7. THE GENERAL CONTRACTOR AND ALL SUBCONTRACTORS WILL VISIT THE SITE PRIOR TO BIDDING IN ORDER TO FAMILIARIZE THEMSELVES WITH THE EXISTING SITE CONDITIONS AND THE IMPACT OF THE PROPOSED NEW WORK, INDICATED ON THE DRAWINGS AND SPECIFICATIONS, ON THESE CONDITIONS. ANY QUESTIONS REGARDING THE COORDINATION OF NEW WORK OR EXISTING CONDITIONS MUST BE SUBMITTED TO THE OWNER'S REPRESENTATIVE IN WRITING PRIOR TO BID SUBMISSION AND WITH ADEQUATE TIME FOR RESPONSE TO ALL BIDDERS. THE OWNER'S REPRESENTATIVE WILL RESPOND TO QUESTIONS, SUBMITTED IN A TIMELY MANNER, WITH WRITTEN CLARIFICATIONS FORWARDED TO ALL BIDDERS.
8. IT IS THE GENERAL CONTRACTOR'S RESPONSIBILITY TO VERIFY SIZE AND INVERT ELEVATION OF OPENINGS / SLEEVES THROUGH CONCRETE AND MASONRY WALLS AND CONCRETE FOUNDATION WALLS. OPENINGS / SLEEVES ARE NOT LIMITED TO THOSE SHOWN ON STRUCTURAL DRAWING SHEETS.
9. IT IS THE RESPONSIBILITY OF THE GENERAL CONTRACTOR TO COORDINATE AND MAKE PROVISIONS FOR ALL PIPE / CONDUIT SLEEVES THROUGH CONCRETE WALLS.
10. ALL CONSTRUCTION RELATING TO BUILDING, PARKING OR SITE DEVELOPMENT SHALL CONFORM TO STATE OF OREGON AND JURISDICTIONAL ACCESSIBILITY REQUIREMENTS.
11. THE CONTRACTOR SHALL COORDINATE ANY AND ALL REQUIREMENTS FOR OFF-SITE IMPROVEMENTS, INCLUDING BUT NOT LIMITED TO SIDEWALKS, DRIVEWAYS, CURBS, GUTTERS, UTILITIES, ETC. OFF SITE IMPROVEMENTS SHALL MEET THE REQUIREMENTS OF THE AUTHORITY HAVING JURISDICTION (AHJ).
12. THE EXISTING DIMENSIONS AND CONDITIONS SHOWN ON THESE DRAWINGS ARE ASSUMED TO BE ACCURATE BASED ON AVAILABLE INFORMATION. THE CONTRACTOR SHALL, PRIOR TO THE START OF CONSTRUCTION, VERIFY ALL EXISTING CONDITIONS, PROVIDE A COMPLETE FIELD LAYOUT ON THE JOB SITE, AND NOTIFY THE OWNER'S REPRESENTATIVE OF ANY DEVIATIONS OR CONFLICTS WITH THESE DRAWINGS.
13. THE DRAWINGS SHALL NOT BE SCALED. THE GENERAL CONTRACTOR SHALL REFER TO THE DIMENSIONS INDICATED OR THE ACTUAL SIZES OF CONSTRUCTION ITEMS. WHERE NO DIMENSIONS OR METHOD OF DETERMINING A LOCATION IS GIVEN, VERIFY CORRECT DIMENSIONS OR LOCATION WITH THE OWNER'S REPRESENTATIVE PRIOR TO INSTALLATION.
14. ALL ITEMS IN THESE DOCUMENTS ARE NEW UNLESS OTHERWISE NOTED.
15. ITEMS INDICATED IN THIS SET NOTED "BY OWNER" ARE NOT IN THE CONTRACT (NIC). **DIMENSIONS ARE TO FACE OF STRUCTURE UNLESS OTHERWISE NOTED.**
16. WHERE DIMENSIONS ARE NOTED TO BE VERIFIED IN THE FIELD (VIF) THE DIMENSION SHOWN IS THE DESIGN BASIS, BUT MAY DIFFER FROM ACTUAL CONDITIONS. CONTRACTOR SHALL VERIFY THESE DIMENSIONS WHILE LAYING OUT THE WORK AND REPORT ANY DISCREPANCIES BETWEEN THE DESIGN BASIS AND ACTUAL DIMENSIONS TO THE OWNER'S REPRESENTATIVE PRIOR TO PROCEEDING WITH THE WORK. WHERE DIMENSIONS ARE NOTED "+/-" FIELD DIMENSIONS MAY VARY FROM THE NOTED DIMENSIONS BY MINOR AMOUNTS. IF THE CONTRACTOR IDENTIFIES DIMENSIONS IN THE FIELD THAT DIFFER BY MORE THAN 1" FROM THE +/- DIMENSIONS INDICTED IN THE DRAWINGS, THE CONTRACTOR SHOULD CONFIRM DIFFERENTIAL WITH ARCHITECTS.
17. FIXED DIMENSIONS NOTED OUTSIDE THESE AREAS AND NOT NOTED AS "MINIMUM" OR "CLEAR" DIMENSIONS MAY BE ASSUMED TO HAVE A TOLERANCE OF ±1/4".
18. WALL LOCATIONS NOT SPECIFICALLY DIMENSIONED BUT IN CLOSE RELATIVE LOCATION TO DIMENSIONED WALLS ARE TO BE ALIGNED FLUSH. ARCHITECT TO PROVIDE CLARIFICATION AT AREAS OF CONCERN.
19. WHERE TWO CORRIDORS INTERSECT, IT IS TO BE ASSUMED THAT THE WALL FACES ACROSS THE INTERSECTING CORRIDOR SHOULD CONTINUE IN ALIGNMENT, KEEPING A CONSISTENT CORRIDOR WIDTH.
20. PROVIDE IN-WALL BACKING FOR ALL WALL-MOUNTED ITEMS.
21. ELEVATIONS ARE TO TOP OF CONCRETE OR OTHER HARD SURFACE MATERIAL. DO NOT SCALE DRAWINGS. USE DIMENSIONS INDICATED.
22. INTERIOR DETAILS AND FINISHES ARE KEYED TO THE PLANS AT TYPICAL LOCATIONS AND APPLY TO ALL LOCATIONS WHICH ARE SIMILAR BUT ARE NOT OTHERWISE DETAILED OR NOTED. THE CONTRACTOR AND SUBCONTRACTORS ARE RESPONSIBLE TO COORDINATE THE LOCATION OF TYPICAL DETAILS AND INTERIOR FINISHES AND INSTALL THE WORK INDICATED. IF DISCREPANCIES EXIST OR QUALIFICATION IS REQUIRED, THE CONTRACTOR SHALL NOTIFY THE OWNER'S REPRESENTATIVE FOR CLARIFICATION PRIOR TO PROCEEDING.
23. ABBREVIATIONS ON THIS SHEET APPLY TO THE ENTIRE SET UNLESS OTHERWISE NOTED.
24. DETAILS ARE INTENDED TO SHOW METHOD AND MANNER OF ACCOMPLISHING THE WORK. MINOR MODIFICATIONS MAY BE REQUIRED TO SUIT JOB DIMENSIONS OR CONDITIONS AND SHALL BE INCLUDED AS PART OF THE WORK.
25. NOTES AND DETAILS ON DRAWINGS SHALL TAKE PRECEDENCE OVER GENERAL NOTES, SYMBOLS, AND TYPICAL DETAILS. SPECIFIC NOTES ON DETAILS APPLY TO SIMILAR CONDITIONS UNLESS NOTED OTHERWISE (UNO / UON).
26. THE BUILDING SHALL BE PROVIDED WITH A FULL SPRINKLER SYSTEM COMPLYING WITH APPLICABLE CODES OF THE AUTHORITY HAVING JURISDICTION.
27. WHERE FIRE RATED OPENING PROTECTION IS REQUIRED, THE FIRE DOORS AND SMOKE AND DRAFT CONTROL ASSEMBLIES INSTALLED IN CORRIDOR OPENINGS SHALL BE TESTED AND LABELED IN ACCORDANCE WITH OSSC CURRENT EDITION SECTION 714. IN ACCORDANCE WITH THE REQUIREMENTS OF THE LISTED ASSEMBLY, THE MANUFACTURER'S INSTALLATION INSTRUCTIONS SHALL BE PROVIDED WITH EACH ASSEMBLY FOR INSTALLATION AND FOR REVIEW BY THE INSPECTION AUTHORITY.
28. WALL FIRE RATING INDICATIONS ON THE FLOOR PLANS SHOW EXTENT OF FIRE RATED PARTITION. FIRE RATING IN A PARTITION SHALL CONTINUE OVER DOOR OR WINDOW OPENING WHETHER OR NOT THEY APPEAR IN PLAN.
29. ELEVATORS SHALL COMPLY WITH THE 'OREGON ELEVATOR SPECIALTY CODE'.

DEFERRED SUBMITTALS

REFER TO SPECIFICATION SECTION 01 1150 FOR BIDDER DESIGN REQUIREMENTS FOR BOTH AHJ REVIEW ITEMS AND NON-AHJ DEFERRED ITEMS. SUBMITTAL DOCUMENTS FOR AHJ DEFERRED SUBMITTAL ITEMS SHALL BE SUBMITTED TO THE ARCHITECT OF RECORD BY THE GENERAL CONTRACTOR. ARCHITECT AND APPROPRIATE ENGINEER OF RECORD SHALL REVIEW AND RETURN. THE GENERAL CONTRACTOR SHALL THEN FORWARD AHJ SUBMITTAL ITEMS TO THE BUILDING OFFICIAL FOR AHJ APPROVAL WITH A NOTATION INDICATING THAT THE DEFERRED SUBMITTAL DOCUMENTS HAVE BEEN REVIEWED AND THAT THEY HAVE BEEN FOUND IN GENERAL CONFORMANCE WITH THE DESIGN OF THE BUILDING. THE AHJ DEFERRED SUBMITTAL ITEMS SHALL NOT BE INSTALLED UNTIL THEIR DESIGN AND SUBMITTAL DOCUMENTS HAVE BEEN APPROVED BY THE BUILDING OFFICIAL.

A. DIVISION 7 - FIRESTOPPING
B. DIVISION 10 - STRUCTURAL SUPPORTS AND ENGINEERING FOR OVERHEAD SUSPENDED EQUIPMENT
C. DIVISION 22 - PLUMBING
D. DIVISION 23 - MECHANICAL
E. DIVISION 26 - ELECTRICAL
F. DIVISION 28 - FIRE ALARM

SEE SPEC SECTION 011150 SUBMITTAL REQUIREMENTS FOR NON-AHJ BIDDER DESIGNED/ ENGINEERED ITEMS.

SYMBOLS LEGEND

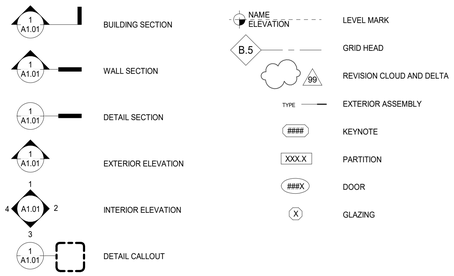

DOOR MANEUVERING CLEARANCES

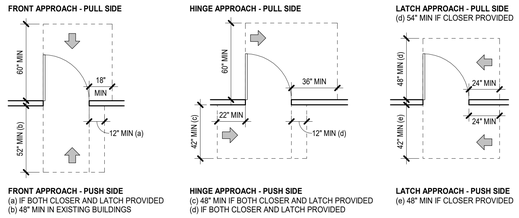

LEVEL CHANGE

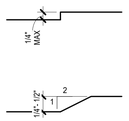

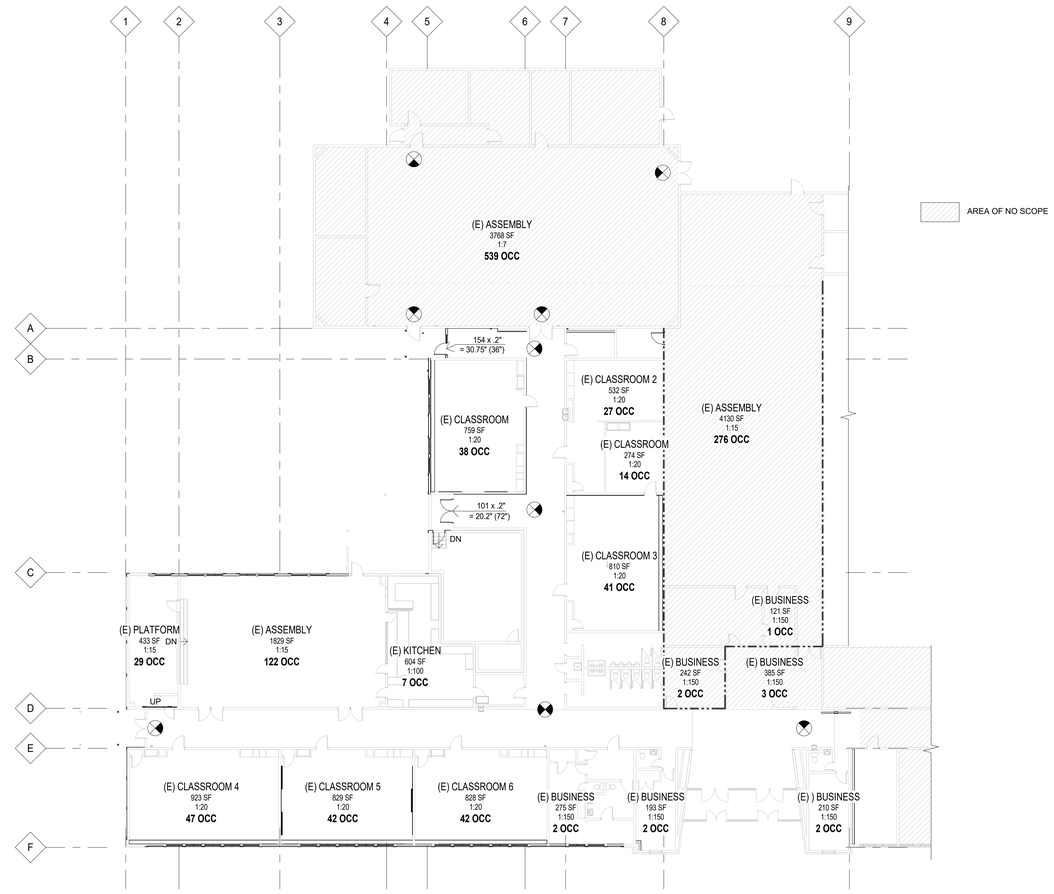

EXITING PLAN

(1/16" = 1'-0")

MOUNTING HEIGHTS

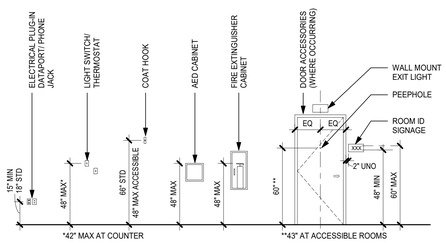

REACH RANGES

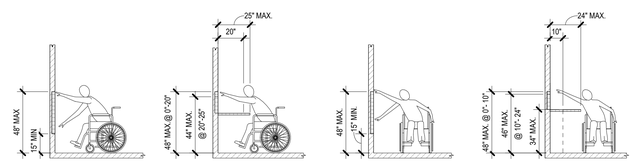

A117.1 FIGURE 308.2.1 UNOBSTRUCTED FORWARD REACH

A117.1 FIGURE 308.2.2 OBSTRUCTED HIGH FORWARD REACH (A) AND (B)

A117.1 FIGURE 308.3.1 UNOBSTRUCTED SIDE REACH

A117.1 FIGURE 308.3.2 OBSTRUCTED HIGH SIDE REACH (A) AND (B)

PROTRUSIONS

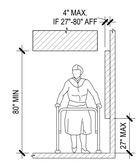

A117.1 FIGURE 307.2 LIMITS OF PROTRUDING OBJECTS

DRINKING FOUNTAIN

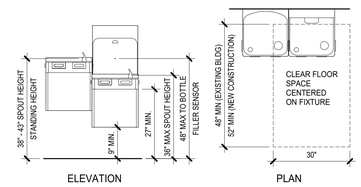

ARCHITECTURAL ABBREVIATIONS

#	POUND OR NUMBER	BD	BOARD	CONC	CONCRETE	DN	DOWN	EXP	EXPOSED, EXPANSION	FOS	FACE OF STEEL/STUD	HVAC	HEATING, VENTILLATION, AND AIR CONDITIONING	MH	MANHOLE	PAR	PARAPET	REINF	REINFORCE(D), REINFORCING	SV	SHEET VINYL	VEST	VESTIBULE
A/C	AIR CONDITIONING	BIT	BITUMINOUS	CONST	CONSTRUCTION	DR	DOOR	EXT	EXTERIOR	FP	FIREPROOFING	HWD	HARDWOOD	MIN	MINIMUM	PERF	PERFORATE(D)	REQ(D)	REQUIRED	TB, TCKBD	TACKBOARD	VFY	VERIFY
A/V	AUDIO VISUAL	BLDG	BUILDING	CONT	CONTINUE, CONTINUOUS	DS	DOWNSPOUT	FA	FIRE ALARM	FR	FRAME(D), FRAMING	HWH	HOT WATER HEATER	MISC	MISCELLANEOUS	PJT	PANEL JOINT	REV	REVISION(S), REVISED	TEL	TELEPHONE	VIF	VERIFY IN FIELD
AB	ANCHOR BOLT	BLKG	BLOCKING	COORD	COORDINATE	DTL	DETAIL	FAF	FLUID APPLIED FLOORING	FS	FULL SIZE, FLAME SPREAD	ID	INSIDE DIAMETER	MO	MASONRY OPENING	PLAM	PLASTIC LAMINATE	RH	RIGHT HAND	TEMP	TEMPERED, TEMPERATURE	W	WEST
AC	ASPHALTIC CONCRETE	BM	BENCH MARK	CPT	CARPET	DWG(S)	DRAWING(S)	FD	FLOOR DRAIN, FIRE DAMPER	FT	FIRE TREATED	INCL	INCLUDE(D), INCLUDING	MOD	MODULAR	PLAT	PLATFORM	RM	ROOM	TG, T&G	TONGUE AND GROOVE	W/	WITH
ACM	ALUMINUM COMPOSITE METAL	BO	BOTTOM OF	CRS	COURSE	DWR	DRAWER	FE(C)	FIRE EXTINGUISHER (CABINET)	FTG	FOOTING	INS(UL)	INSULATE(D), INSULATION	MP	METAL PANEL	PNL	PANEL	RND	ROUND	TO	TOP OF	W/O	WITHOUT
ACT	ACOUSTICAL CEILING TILE	BOL	BOLLARD	CS	COUNTERSINK	E	EAST	FF	FINISH FLOOR	GA	GAUGE	INT	INTERIOR	MRGB	MOISTURE RESISTANT GYPSUM WALL BOARD	PNT	PAINT	RO	ROUGH OPENING	TOC	TOP OF CURB, TOP OF CONCRETE	WC	WATER CLOSET
AD	AREA DRAIN	BOT	BOTTOM	CSMT	CASEMENT	EA	EACH	FFE	FURNISHINGS FIXTURES EQUIPMENT	GALV	GALVANIZED	JAN(T)	JANITOR	MTL	METAL	PSF	POUNDS PER SQUARE FOOT	S	SOUTH			WD	WOOD
ADD	ADDENDUM	BR(N)Z	BRONZE	CT	CERAMIC TILE	EB	EXPANSION BOLT	FGL	FIBERGLASS	GB	GRAB BAR, GYPSUM BOARD	JC	JANITOR'S CLOSET	MULL	MULLION	PSI	POUNDS PER SQUARE INCH	SA	SUPPLY AIR	TOF	TOP OF FRAMING	WP	WATERPROOF(ING)
ADH	ADHESIVE	BSMT	BASEMENT	CTR	CENTER	EJ	EXPANSION JOINT	FHC	FIRE HOSE CABINET	GL	GLASS, GLAZING, GRIDLINE	JT	JOINT	MWP	MEMBRANE WATERPROOFING	PT	PRESSURE TREATED, POINT	SAM	SELF-ADHERED MEMBRANE	TOP	TOP OF PARAPET	WS	WATERSTOP
ADJ	ADJUSTABLE, ADJACENT	CAB	CABINET	CUST	CUSTODIAL	EL, ELEV	ELEVATION	FHMS	FLATHEAD MACHINE SCREW	GWB	GYPSUM WALL BOARD	KO	KNOCK-OUT	N	NORTH	PTD	PAINTED, PAPER TOWEL DISPENSER	SC	SOLID CORE	TOPL	TOP OF PLATE	WWF	WELDED WIRE FABRIC
AFF	ABOVE FINISH FLOOR	CB	CATCH BASIN	CX	CONNECTION	ELEC	ELECTRIC(AL)	FHWS	FLATHEAD WOOD SCREW	GYP (BD)	GYPSUM (BOARD)	LAM	LAMINATE(D)	NAT	NATURAL	PTL	PARTIAL	SECT	SECTION	TOR	TOP OF ROOF	XPS	EXTRUDED POLYSTYRENE
AGG	AGGREGATE	CCTV	CLOSED CIRCUIT TV	CY	CUBIC YARD	EMER(G)	EMERGENCY	FIN	FINISH(ED)	HB	HOSE BIB	LAV	LAVATORY	NIC	NOT IN CONTRACT	PTN	PARTION	SIM	SIMILAR	TOS	TOP OF STEEL	YD	YARD
AHJ	AUTHORITY HAVING JURISDICTION	CEM	CEMENT	DEM(O)	DEMOLISH, DEMOLITION	ENCL	ENCLOSE(URE)	FL	FLOOR	HBD	HARDBOARD	LH	LEFT HAND	NOM	NOMINAL	PVC	POLYVINYL CHLORIDE	SL	SLEEVE	TOW	TOP OF WALL	±	PLUS OR MINUS
AL(UM)	ALUMINUM	CF	CUBIC FOOT	DEP	DEPRESSED	EOS	EDGE OF SLAB	FLASHG	FLASHING	HC	HOLLOW CORE	LW	LIGHTWEIGHT	NTS	NOT TO SCALE	PWD	PLYWOOD	SPEC(S)	SPECIFICATION(S)	TS	TUBE STEEL	ø	DIAMETER
ALT	ALTERNATE	CG	CORNER GUARD	DF	DRINKING FOUNTAIN	EP	ELECTRICAL PANEL BOARD	FLCO	FLOOR CLEANOUT	HD	HEAVY DUTY	MAX	MAXIMUM	OA	OVERALL	QT	QUARRY TILE	SQ	SQUARE	TYP	TYPICAL		
ANOD	AN(O)IZED	CI	CONTINUOUS INSULATION	DIA	DIAMETER	EPDM	ETHYLENE PROPYLENE DIENEMONOMER	FLR	FLOOR(ING)	HDR	HEADER	MB	MACHINE BOLT, MARKER BOARD	OC	ON CENTER	RA	RETURN AIR	SS	STAINLESS STEEL	U/C	UNDERCOUNTER		
AP	ACCESS / ACOUSTIC PANEL	CJ(T)	CONTROL JOINT	DIAG	DIAGONAL	EQ	EQUAL	FLS	FIRE LIFE SAFETY	HDW(R)	HARDWARE	MECH	MECHANICAL	OD	OUTSIDE DIAMETER	RAD	RADIUS	STD	STANDARD	UON, UNO	UNLESS NOTED OTHERWISE		
APPROX	APPROXIMATE	CL	CENTERLINE	DIM	DIMENSION	EQUIP	EQUIPMENT	FLUOR	FLUORESCENT	HM	HOLLOW METAL	MEZZ	MEZZANINE	OPG	OPENING	RB	RESILIENT BASE	STL	STEEL	VB	VAPOR BARRIER		
ARCH	ARCHITECT(URAL)	CLG	CEILING	DISP	DISPENSER	EST	ESTIMATE	FND(N)	FOUNDATION	HOR(IZ)	HORIZONTAL	MFR	MANUFACTURE(R)	OPP	OPPOSITE	RCP	REFLECTED CEILING PLAN	STRUCT	STRUCTURAL	VCT	VINYL COMPOSITION TILE		
AUTO	AUTOMATIC	CLR	CLEAR(ANCE)	DIV	DIVISION	EXH	EXHAUST	FOC	FACE OF CONCRETE	HR	HOUR	MFR	MANUFACTURE(R)	OVHD	OVERHEAD	RD	ROOF DRAIN	SUPP	SUPPLEMENT, SUPPLY	VERT	VERTICAL		
BATT	BATT INSULATION	CMU	CONCRETE MASONRY UNIT	DL	DEAD LOAD	EXIST(E)	EXISTING	FOF	FACE OF FINISH	HT	HEIGHT	MGR	MANAGER			REF(R)	REFER(ENCE), REFRIGERATOR	SUSP	SUSPENDED				
		COL	COLUMN	DMT	DEMOUNTABLE					HTG	HEATING												

KEY PLAN

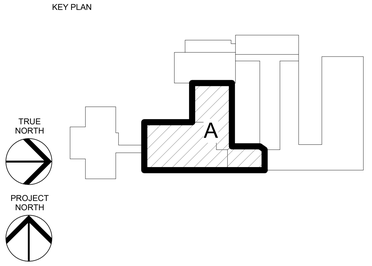

ZCS
524 Main Street, Suite 2
Oregon City, OR 97045
503.659.2205

Soderstrom Architects
1331 NW Lovejoy Street,
Suite 775
Portland, OR 97209
T 503-228-5617
sdra.com

LAUREL ELEMENTRY SCHOOL
1401 LAUREL ST,
JUNCTION CITY, OR 97448

LAUREL ELEMENTARY SCHOOL SEISMIC RETROFIT

REGISTERED ARCHITECT
4758
PORTLAND, OREGON
STATE OF OREGON

△	DESCRIPTION	DATE:

PROJECT NO.
WRK: P-2973-24
SDRA: 24059

DRAWN: FL
CHECKED: TH
DATE: 09/19/2025

PROJECT INFO

G1.01

BID AND PERMIT SET

ONE INCH EQUALS FULL SCALE 9/16/2025 3:06:57 PM Autodesk Docs://P2973 Laurel ES Classrooms & Cafeteria/P2973_ARCH_R23.rvt

Attachment A

WALL ASSEMBLIES

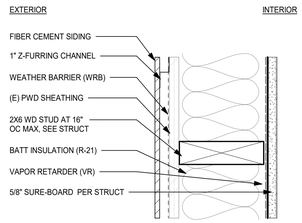

NOTE: FRONT WALL AT CLASSROOMS

EXT WALL ASSEMBLY - W1
(3" = 1'-0")

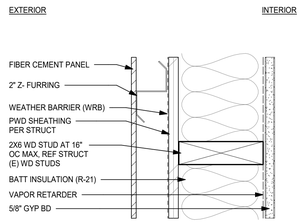

NOTE: WHERE ALL EXT AND INT FINISHES WERE REMOVED

EXT WALL ASSEMBLY - W2
(3" = 1'-0")

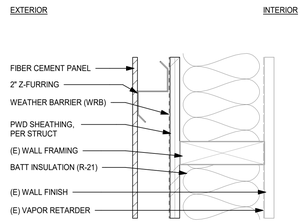

NOTE: WHERE BRICK WAS REMOVED, BUT INT FINISHES REMAIN

EXT WALL ASSEMBLY - W3
(3" = 1'-0")

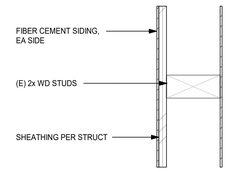

EXT WALL ASSEMBLY - W4
(3" = 1'-0")

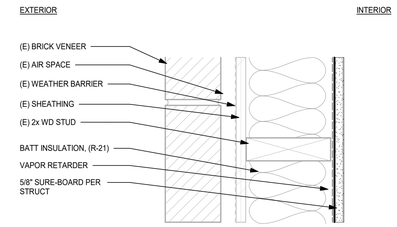

EXT WALL ASSEMBLY - W5
(3" = 1'-0")

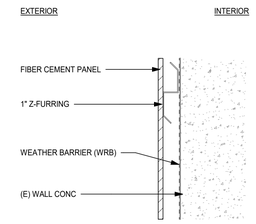

EXT WALL ASSEMBLY - W6
(3" = 1'-0")

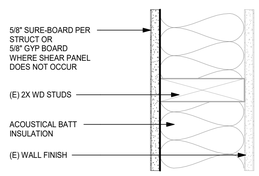

TYPICAL SHEAR WALL

PARTITION TYPE - P1
(3" = 1'-0")

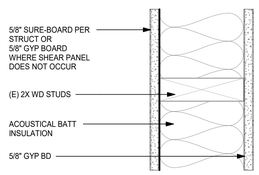

PARTITION TYPE - P2
(3" = 1'-0")

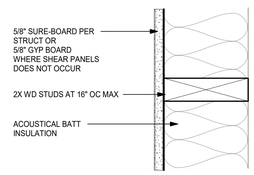

SHEAR WALLS AT SEISMIC SEPARATIONS

PARTITION TYPE - P3
(3" = 1'-0")

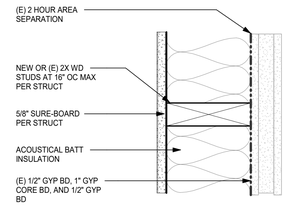

PARTITION TYPE - P4
(3" = 1'-0")

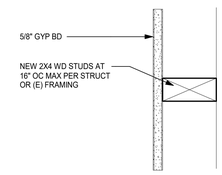

PARTITION TYPE - P5
(3" = 1'-0")

ROOF ASSEMBLIES

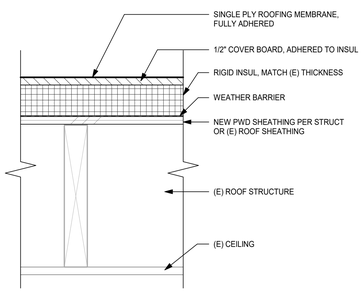

ROOF ASSEMBLY - R1
(3" = 1'-0")

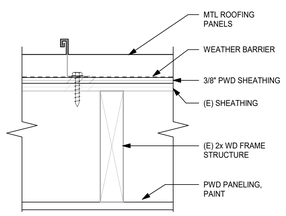

ROOF ASSEMBLY - R2
(3" = 1'-0")

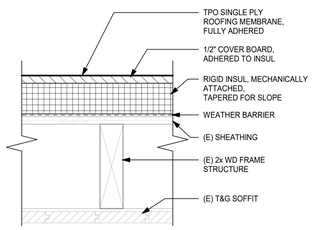

ROOF ASSEMBLY - R3
(3" = 1'-0")

FLOOR ASSEMBLIES

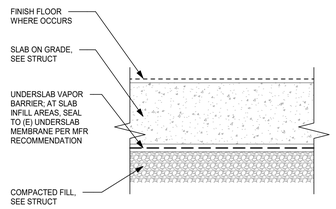

EXT FLOOR ASSEMBLY - 'XF1'
(3" = 1'-0")

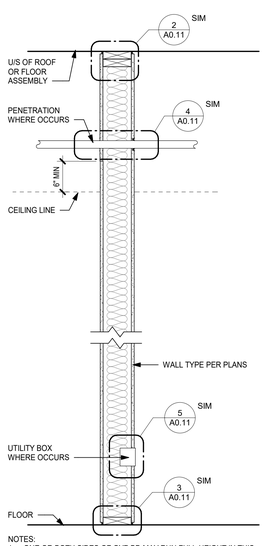

NOTES:
1. ONE OR BOTH SIDES OF GYP BD MAY RUN FULL-HEIGHT IN THIS CONDITION. REFER TO PARTITION TYPE LEGEND.
2. IN ROOMS WHERE NO CEILING IS CALLED FOR, THEN THE STUDS AND GYP BD SHALL RUN TO THE UNDERSIDE OF THE FLOOR / ROOF ASSEMBLY ABOVE.

1 PARTITION TO DECK
(1" = 1'-0")

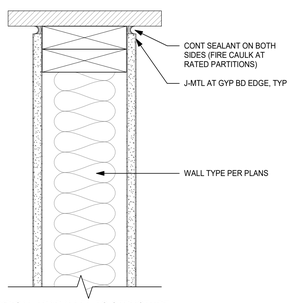

TYPICAL / PARALLEL TO STRUCTURE

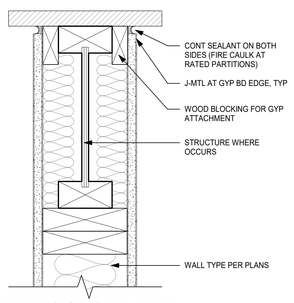

CENTERED ON STRUCTURAL MEMBER

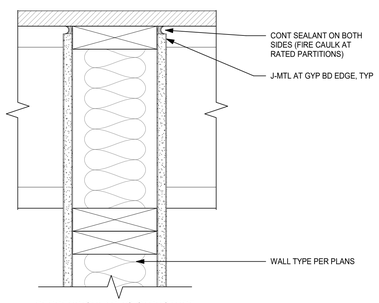

PERPENDICULAR TO STRUCTURE

2 PARTITION HEAD CONDITIONS
(3" = 1'-0")

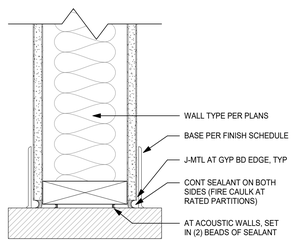

3 PARTITION SILL
(3" = 1'-0")

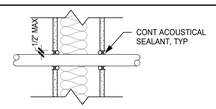

PENETRATION 1" DIA OR LESS

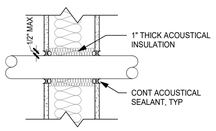

PENETRATION GREATER THAN 1" DIA

4 NON-RATED PENETRATIONS
(1 1/2" = 1'-0")

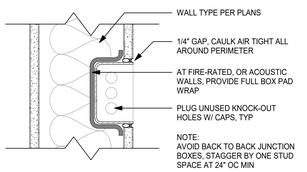

5 UTILITY BOX PENETRATION
(3" = 1'-0")

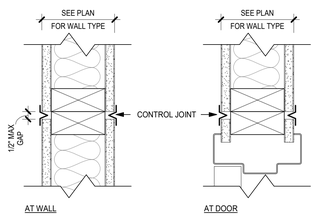

6 GYP BD CONTROL JOINT
(3" = 1'-0")

FINISH SUMMARY

HIGH PRESSURE LAMINATE	
HPL-1: CLASSROOM COUNTERS	MFR: TBD PRODUCT #: TBD COLOR: TBD
ACOUSTIC CEILINGS	
ACT-1: 12" x 12"	REFERENCE SPECIFICATION
ACT-2: 16" x 32"	REINSTALL SALVAGED TILES
RESILIENT FLOORING	
VCT-1: VINYL COMPOSITION TILE	MFR: TBD PRODUCT #: TBD COLOR: TBD
VCT-2: VINYL COMPOSITION TILE	MFR: TBD PRODUCT #: TBD COLOR: TBD
SV-1: SHEET VINYL	MFR: TBD PRODUCT #: TBD COLOR: TBD
RESILIENT BASE & ACCESSORIES	
RB-1: CORRIDORS & CLASSROOMS	MFR: TBD PRODUCT #: TBD COLOR: DARK GRAY
RB-2: CAFETERIA	MFR: TBD PRODUCT #: TBD COLOR: BLACK
PAINT AND COATINGS	
P-1: INTERIOR WALL FIELD COLOR	MATCH EXISTING WALL COLOR
P-2: EXTERIOR FIELD COLOR	EXTERIOR WALL COLOR, MATCH (E)
P-3: EXTERIOR ACCENT COLOR VERTICAL TRIM BOARDS	MFR: TBD COLOR: TBD
P-4: EXTERIOR ACCENT COLOR WINDOWS AT FRONT OF SCHOOL	MFR: TBD COLOR: TBD
P-5: EXTERIOR TRIM COLOR	MATCH EXISTING TRIM COLOR
WINDOW SHADES	
WS-1	MFR: MECCO PRODUCT: COLOR:

ZCS
524 Main Street, Suite 2
Oregon City, OR 97045
503.659.2205

Soderstrom Architects
1331 NW Lovejoy Street, Suite 775
Portland, OR 97209
T 503-228-5617
sdra.com

LAUREL ELEMENTRY SCHOOL
1401 LAUREL ST,
JUNCTION CITY, OR 97448

LAUREL ELEMENTARY SCHOOL SEISMIC RETROFIT

REGISTERED ARCHITECT 4758 PORTLAND, OREGON STATE OF OREGON

△	DESCRIPTION	DATE:

PROJECT NO.
WRK: P-2973-24
SDRA: 24059

DRAWN: FL
CHECKED: TH
DATE: 09/19/2025

ASSEMBLIES AND FINSH SCHEDULE

A0.11

BID AND PERMIT SET

ONE INCH EQUALS FULL SCALE 9/16/2025 3:06:58 PM Autodesk Docs://P2973 Laurel ES Classrooms & Cafeteria/P2973_ARCH_R23.rvt

Attachment A

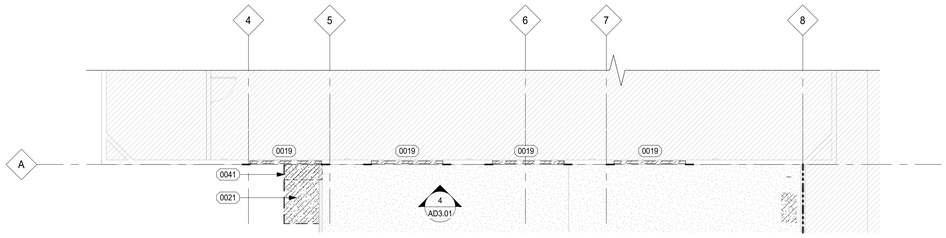

2 GYM DEMOLITION UPPER FLOOR PLAN

(1/8" = 1'-0")

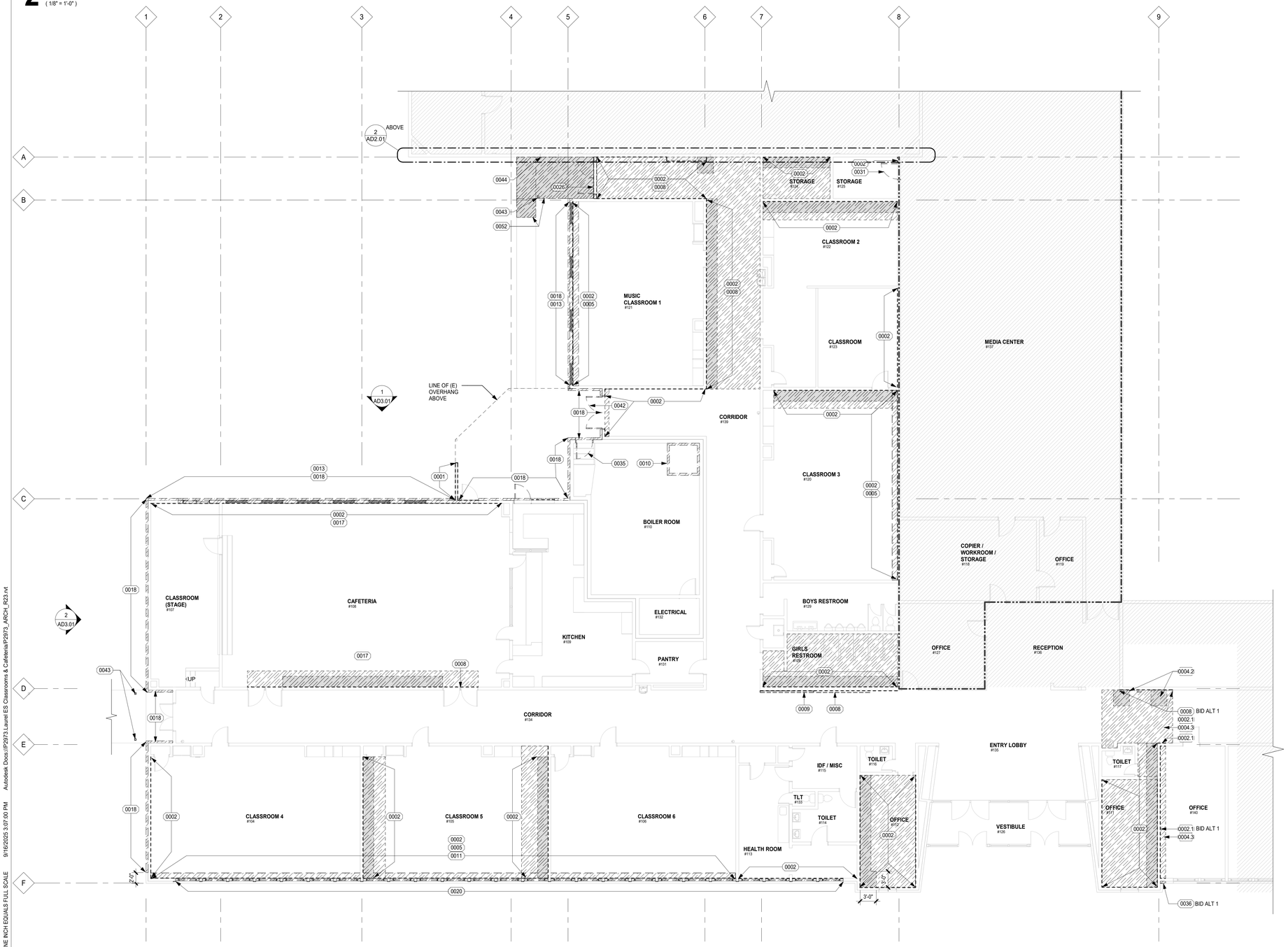

1 DEMOLITION FLOOR PLAN

(1/8" = 1'-0")

DEMOLITION NOTES

1. VERIFY EXTENT OF DEMOLITION WITH PROPOSED DESIGN.
2. PATCH ALL EXISTING WALLS AS REQUIRED TO PROVIDE A SMOOTH SURFACE FOR NEW FINISHES.
3. CONTRACTOR SHALL PROVIDE TEMPORARY PARTITION DUST BARRIERS IN ORDER TO MINIMIZE THE SPREAD OF DUST AND DEBRIS, AND TO PROTECT ADJACENT SPACES.
4. CONTRACTOR SHALL BE RESPONSIBLE FOR THE REMOVAL OF ALL DEMOLITION MATERIAL, IN ACCORDANCE WITH BUILDING OWNER / TENANT STANDARDS.
5. REMOVE AND SALVAGE WALL MOUNTED EQUIPMENT OR SIGNAGE FOR REINSTALL AS NEEDED TO COMPLETE STRUCT WORK.
6. REMOVE AND SALVAGE LIGHT FIXTURES AND CEILING MOUNTED DEVICES FOR REINSTALL AS NEEDED TO COMPLETE STRUCT WORK.
7. REMOVE AND SALVAGE STAIN STEEL WALL BASE. REINSTALL IN SAME LOCATION.

DEMOLITION LEGEND

EXISTING WALL TO REMAIN

EXISTING 2-HOUR RATED FIRE WALL

AREA OF NO WORK
(NOT IN CONTRACT)

SLAB AND FLOORING TO BE DEMOLISHED
AS REQD TO COMPLETE STRUCT SCOPE

CASEWORK TO BE DEMOLISHED;
FLOORING FINISH TO BE DEMOLISHED
CONC SLAB TO REMAIN

INTERIOR WALL FINISH TO BE DEMOLISHED TO STRUCTURE;
REMOVE AND SALVAGE WALL MOUNTED EQUIPMENT AND
DEVICES FOR REINSTALL

KEYNOTES

MARK	DESCRIPTION
0001	DEMO (E) WOOD PANELING AND TRIM BOARDS ON BOTH SIDES OF WALL
0002	DEMO WALL FINISHES TO STRUCTURE. REMOVE AND SALVAGE WALL MOUNTED EQUIPMENT AND DEVICES FOR REINSTALL
0002.1	BID ALT 1: DEMO WALL FINISHES TO STRUCTURE. REMOVE AND SALVAGE WALL MOUNTED EQUIPMENT AND DEVICES FOR REINSTALL
0004.2	BID ALT 1: DEMO CONCRETE SLAB PER STRUCT
0004.3	BID ALT 1: DEMO FLOOR FINISH TO CONC SLAB
0005	CASEWORK - REMOVE AND SALVAGE FOR REINSTALL
0008	STUDENT TILE ART - REMOVE AND SALVAGE FOR REINSTALL. CONFIRM LOCATION WITH OWNER BEFORE REINSTALL
0009	(E) WOOD GATE(S) - REMOVE AND SALVAGE FOR REINSTALL. ADJUST AS NEED AND PATCH PAINT.
0010	DEMO (E) BOILER ROOM BRICK CHIMNEY PER STRUCT
0011	DEMO (E) ROLLER SHADES
0013	DEMO (E) WINDOWS
0017	DEMO OVERHEAD PARTITION WALL TRACK AND JAMBS
0018	DEMO BRICK AND EXTERIOR WALL FINISH TO STRUCT FRAMING
0019	DEMO GLASS BLOCK WINDOW AND EXTERIOR T&G SIDING
0020	DEMO GLASS BLOCK W/ ALUM HOPPER WINDOW, WD TRIM BOARDS AND OTHER WD FINISH. STRUCTURAL OPENING FRAMING AND BRICK TO REMAIN
0021	DEMO (E) CANOPY ROOF TO STRUCTURE AND DOWNSPOUT
0026	DEMO WALL AND DOOR
0031	REMOVE AND SALVAGE (E) FIRE-RATED DOOR, HARDWARE, AND FRAME
0035	(E) DOOR AND HARDWARE - REMOVE AND SALVAGE. DEMO DOOR FRAMES
0036	BID ALT 1: (E) MASONRY - DEMO AS NEED TO PERFORM STRUCT SCOPE AND INSTALL SEISMIC JOINT COVER
0041	DEMO ROOF FRAMING PER STRUCT
0042	DEMO DOOR AND FRAME
0043	DEMO (E) STL COLUMN
0044	REMOVE AND SALVAGE (E) ALUM THRESHOLD
0052	DEMO (E) CONC SIDEWALK

ZCS
524 Main Street, Suite 2
Oregon City, OR 97045
503.659.2205

Soderstrom Architects
1331 NW Lovejoy Street,
Suite 775
Portland, OR 97209
T 503-228-5617
sdra.com

LAUREL ELEMENTRY SCHOOL
1401 LAUREL ST,
JUNCTION CITY, OR 97448

LAUREL ELEMENTARY SCHOOL SEISMIC RETROFIT

REGISTERED ARCHITECT
4758
PORTLAND, OR
STATE OF OREGON

△	DESCRIPTION	DATE:

PROJECT NO.
WRK: P-2973-24
SDRA: 24059

DRAWN:	FL
CHECKED:	TH
DATE:	09/19/2025

KEY PLAN

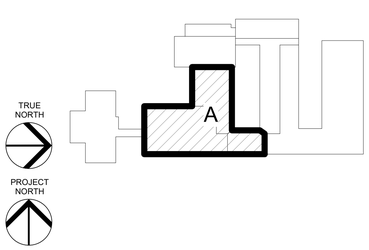

DEMOLITION
FLOOR PLANS

AD2.01

BID AND PERMIT SET

ONE INCH EQUALS FULL SCALE

9/16/2025 3:07:00 PM Autodesk Docs://P2973 Laurel ES Classrooms & Cafeteria/P2973_ARCH_R23.rvt

Attachment A

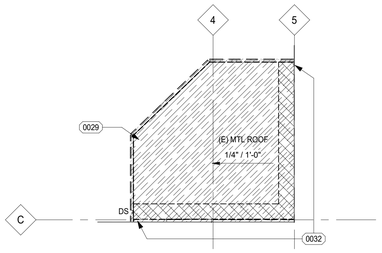

2 DEMOLITION ROOF PLAN

(1/8" = 1'-0")

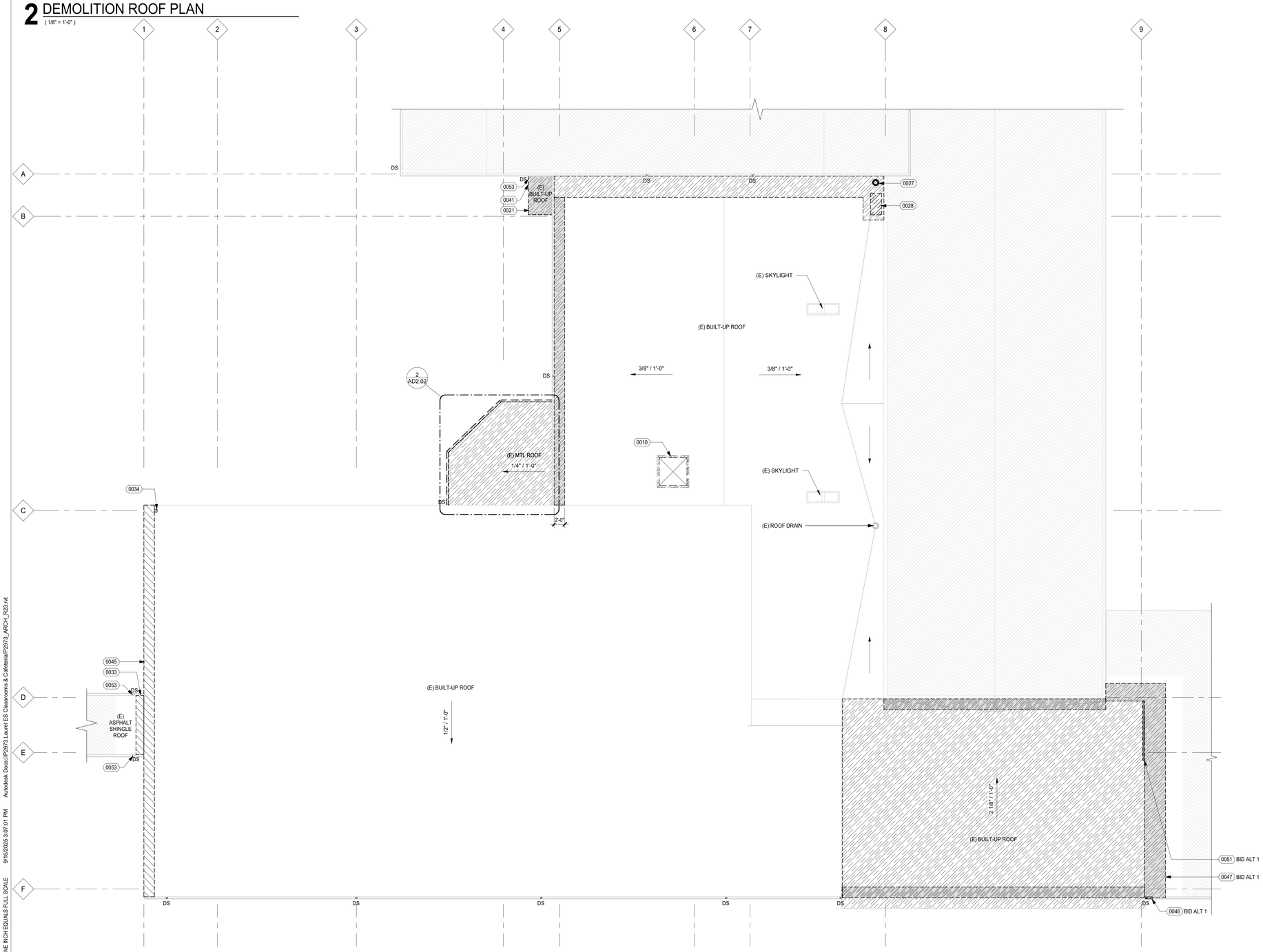

1 DEMOLITION ROOF PLAN

(1/8" = 1'-0")

ONE INCH EQUALS FULL SCALE 9/16/2025 3:07:01 PM Autodesk Docs://P2973 Laurel ES Classrooms & Cafeteria/P2973_ARCH_R23.rvt

ROOF NOTES

1. VFY EXTENT OF DEMOLITION WITH PROPOSED PLANS AND ELEVATIONS.
2. CONTRACTOR SHALL BE RESPONSIBLE FOR THE REMOVAL OF ALL DEMOLITION MATERIAL, IN ACCORDANCE WITH BUILDING OWNER / TENANT STANDARDS.
3. REMOVE AND SALVAGE ROOF VENTS IN AREAS OF ROOF DEMO FOR REINSTALL. PROVIDE NEW CURBS AS NEEDED AND REPLACE DAMAGED ITEMS WITH NEW.
4. REFER TO NON-ARCHITECTURAL SHEETS FOR ADDITIONAL DEMOLITION SCOPE.
5. DEMO DAMAGED ROOF FLASHING, TRIM OR FASCIA BOARDS.
6. DEMO DAMAGED SOFFIT AND SOFFIT VENTS.

ROOF LEGEND

X" / 12"	DIRECTION OF ROOF SLOPE, VIF
	AREA OF NO WORK (NOT IN CONTRACT)
	DEMO (E) ROOFING SYSTEM TO ROOF DECK
	DEMO (E) ROOFING MEMBRANE, DECK, AND FRAMING, REF STRUCT
	DEMO (E) ROOFING SYSTEM TO STRUCTURE AS REQ'D TO REMOVE (E) MASONRY PER STRUCT
DS	DOWNSPOUT
	DEMO AND SALVAGE GUTTER(S) AND DOWNSPOUT(S) FOR REINSTALL, REPLACE IF DAMAGED

KEYNOTES

MARK	DESCRIPTION
0010	DEMO (E) BOILER ROOM BRICK CHIMNEY PER STRUCT
0021	DEMO (E) CANOPY ROOF TO STRUCTURE AND DOWNSPOUT
0027	DEMO (E) ROOF DRAIN
0028	DEMO ROOF FOR NEW ROOF DRAIN
0029	DEMO (E) MTL ROOF PANEL, GUTTER, AND DOWNSPOUT
0032	DEMO MTL ROOF STRUCTURE AS NEEDED FOR MASONRY REMOVAL PER STRUCT
0033	DEMO ROOF AND FRAMING, FASCIA AND FLASHING AS NEEDED TO REMOVE (E) BRICK PER STRUCT
0034	DEMO (E) LIGHT FIXTURE
0041	DEMO ROOF FRAMING PER STRUCT
0045	DEMO ROOFING AS NEEDED TO INSTALL NEW FLASHG AND FASCIA BD
0046	BID ALT 1: DEMO GUTTER AND DOWNSPOUT
0047	BID ALT 1: DEMO ROOFING MATERIAL, DECKING, AND FRAMING AS NEEDED TO INSTALL SEISMIC JOINT
0051	BID ALT 1: DEMO ROOF FASCIA, FRAMING, AND DECKING BACK TO EXT EDGE OF WALL BELOW
0053	REMOVE AND SALVAGE (E) DOWNSPOUT FOR REINSTALL

KEY PLAN

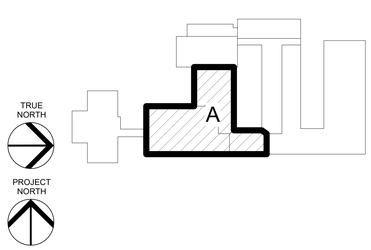

ZCS
524 Main Street, Suite 2
Oregon City, OR 97045
503.659.2205

Soderstrom Architects
1331 NW Lovejoy Street,
Suite 775
Portland, OR 97209
T 503-228-5617
sdra.com

LAUREL ELEMENTRY SCHOOL
1401 LAUREL ST,
JUNCTION CITY, OR 97448

LAUREL ELEMENTARY SCHOOL SEISMIC RETROFIT

REGISTERED ARCHITECT 4758 PORTLAND, OREGON STATE OF OREGON

△	DESCRIPTION	DATE:

PROJECT NO.
WRK: P-2973-24
SDRA: 24059

DRAWN:	FL
CHECKED:	TH
DATE:	09/19/2025

DEMOLITION ROOF PLANS

AD2.02

BID AND PERMIT SET

Attachment A

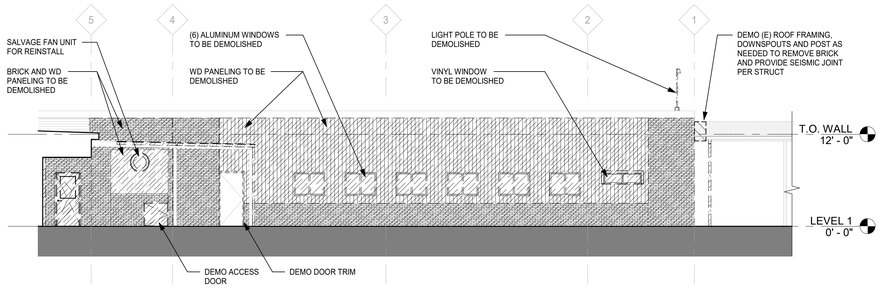

1 DEMO EXTERIOR ELEVATION - WEST

(1/8" = 1'-0")

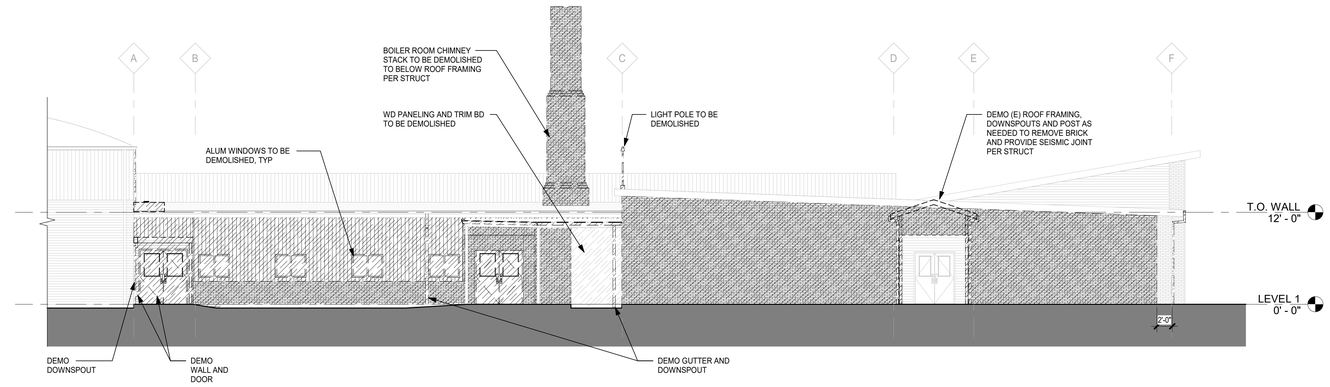

2 DEMO EXTERIOR ELEVATION - SOUTH

(1/8" = 1'-0")

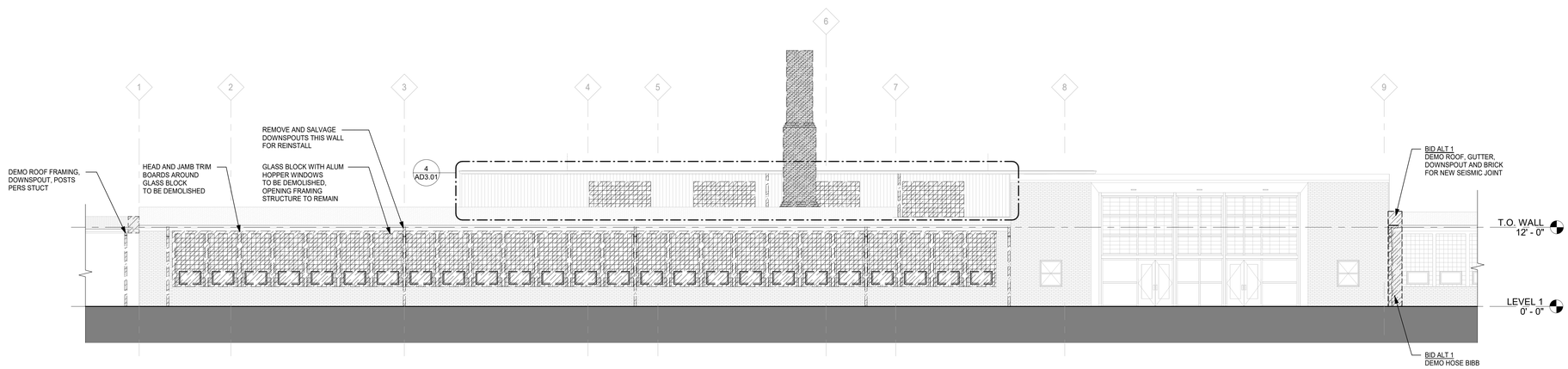

3 DEMO EXTERIOR ELEVATION - EAST

(1/8" = 1'-0")

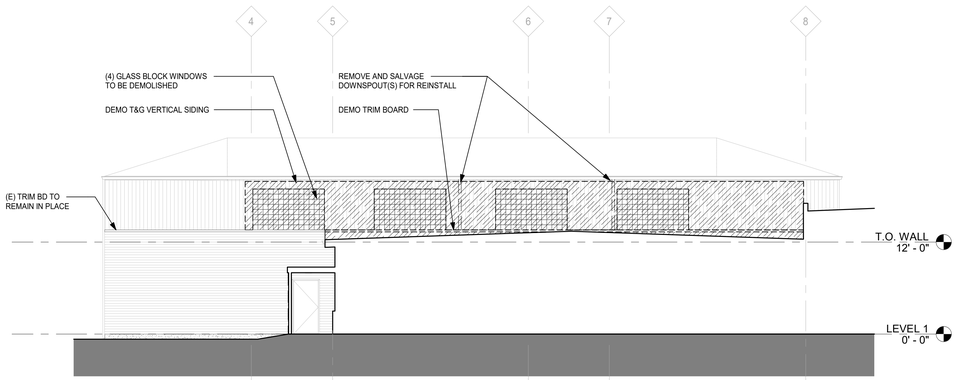

4 DEMO GYM EXTERIOR ELEVATION - EAST

(1/8" = 1'-0")

ONE INCH EQUALS FULL SCALE 9/16/2025 3:07:05 PM Autodesk Docs://P2973 Laurel ES Classrooms & Cafeteria/P2973_ARCH_R23.rvt

ZCS
524 Main Street, Suite 2
Oregon City, OR 97045
503.659.2205

Soderstrom Architects
1331 NW Lovejoy Street,
Suite 775
Portland, OR 97209
T 503-228-5617
sdra.com

LAUREL ELEMENTRY SCHOOL
1401 LAUREL ST,
JUNCTION CITY, OR 97448

LAUREL ELEMENTARY SCHOOL SEISMIC RETROFIT

REGISTERED ARCHITECT 4758 PORTLAND, OREGON STATE OF OREGON

△	DESCRIPTION	DATE:

PROJECT NO.
WRK: P-2973-24
SDRA: 24059

DRAWN:	FL
CHECKED:	TH
DATE:	09/19/2025

DEMOLITION EXTERIOR ELEVATIONS

AD3.01

BID AND PERMIT SET

Attachment A

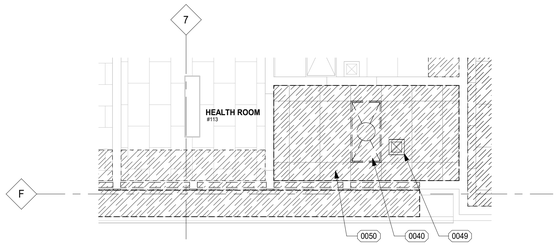

2 DEMO PARTIAL REFLECTED CEILING PLAN - HEALTH RM #113

(1/4" = 1'-0")

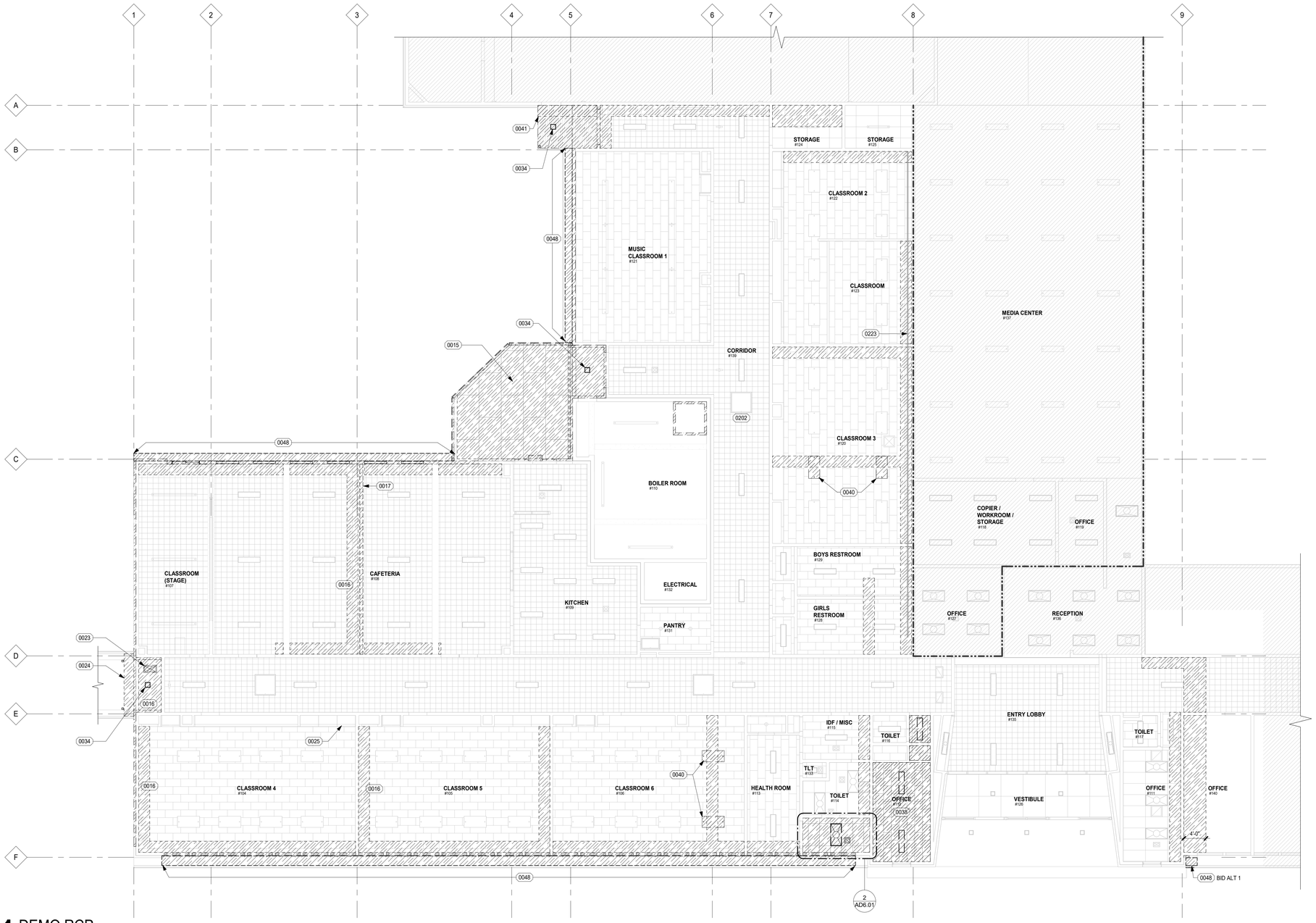

1 DEMO RCP

(1/8" = 1'-0")

DEMOLITION NOTES

1. VERIFY EXTENT OF DEMOLITION WITH PROPOSED DESIGN.
2. PATCH ALL EXISTING WALLS AS REQUIRED TO PROVIDE A SMOOTH SURFACE FOR NEW FINISHES.
3. CONTRACTOR SHALL PROVIDE TEMPORARY PARTITION DUST BARRIERS IN ORDER TO MINIMIZE THE SPREAD OF DUST AND DEBRIS, AND TO PROTECT ADJACENT SPACES.
4. CONTRACTOR SHALL BE RESPONSIBLE FOR THE REMOVAL OF ALL DEMOLITION MATERIAL, IN ACCORDANCE WITH BUILDING OWNER / TENANT STANDARDS.
5. REMOVE AND SALVAGE WALL MOUNTED EQUIPMENT OR SIGNAGE FOR REINSTALL AS NEEDED TO COMPLETE STRUCT WORK.
6. REMOVE AND SALVAGE LIGHT FIXTURES AND CEILING MOUNTED DEVICES FOR REINSTALL AS NEEDED TO COMPLETE STRUCT WORK.
7. REMOVE AND SALVAGE STAIN STEEL WALL BASE. REINSTALL IN SAME LOCATION.

DEMOLITION LEGEND

- EXISTING WALL TO REMAIN
- EXISTING 2-HOUR RATED FIRE WALL
- AREA OF NO WORK (NOT IN CONTRACT)
- DEMO SURFACE-MOUNTED TILES AS NEEDED TO COMPLETE STRUCT WORK
- (E) 12x12 ACOUSTICAL CEILING TILE
- (E) 24x48 ACOUSTICAL CEILING TILE
- (E) 16x32 CEILING MOUNTED TILE
- (E) LIGHT FIXTURES
- (E) ACCESS PANEL
- (E) AIR TERMINALS
- (E) EXIT SIGN

KEYNOTES

MARK	DESCRIPTION
0015	REMOVE AND SALVAGE PLYWOOD CEILING PANELS AND SOFFIT VENTS
0016	DEMO AREA OF CEILING TO STRUCTURE
0017	DEMO OVERHEAD PARTITION WALL TRACK AND JAMBS
0023	DEMO (E) SOFFIT VENT
0024	REMOVE AND SALVAGE SOFFIT PANELS FOR REINSTALL
0025	REMOVE AND SALVAGE WD WALL PANELS FOR REINSTALL ABOVE CASEWORK FOR ROOF ACCESS
0034	DEMO (E) LIGHT FIXTURE
0038	SALVAGE (E) CEILINGS TILES FOR REINSTALL IN OTHER LOCATIONS
0040	REMOVE AND SALVAGE (E) LIGHT FIXTURE FOR REINSTALL
0041	DEMO ROOF FRAMING PER STRUCT
0048	REMOVE AND SALVAGE SOFFIT AND VENT FOR REINSTALL
0049	REMOVE AND SALVAGE CEILING VENT FOR REINSTALL
0050	DEMO (E) ACT CEILING
0202	(E) ACCESS HATCH TO REMAIN IN PLACE
0223	(E) FIRE SPRINKLER LINE, CEILING MOUNT

KEY PLAN

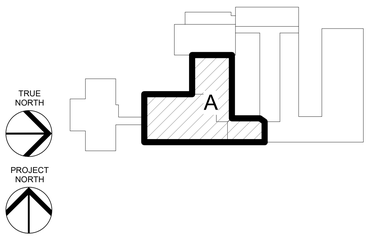

ZCS
524 Main Street, Suite 2
Oregon City, OR 97045
503.659.2205

Soderstrom Architects
1331 NW Lovejoy Street,
Suite 775
Portland, OR 97209
T 503-228-5617
sdra.com

LAUREL ELEMENTRY SCHOOL
1401 LAUREL ST,
JUNCTION CITY, OR 97448

LAUREL ELEMENTARY SCHOOL SEISMIC RETROFIT

REGISTERED ARCHITECT
4758
PORTLAND, OR
STATE OF OREGON

△	DESCRIPTION	DATE:

PROJECT NO.
WRK: P-2973-24
SDRA: 24059

DRAWN:	FL
CHECKED:	TH
DATE:	09/19/2025

DEMOLITION OVERALL RCP

AD6.01

BID AND PERMIT SET

ONE INCH EQUALS FULL SCALE 9/18/2025 3:07:06 PM Autodesk Docs://P2973 Laurel ES Classrooms & Cafeteria/P2973_ARCH_R23.rvt

Attachment A

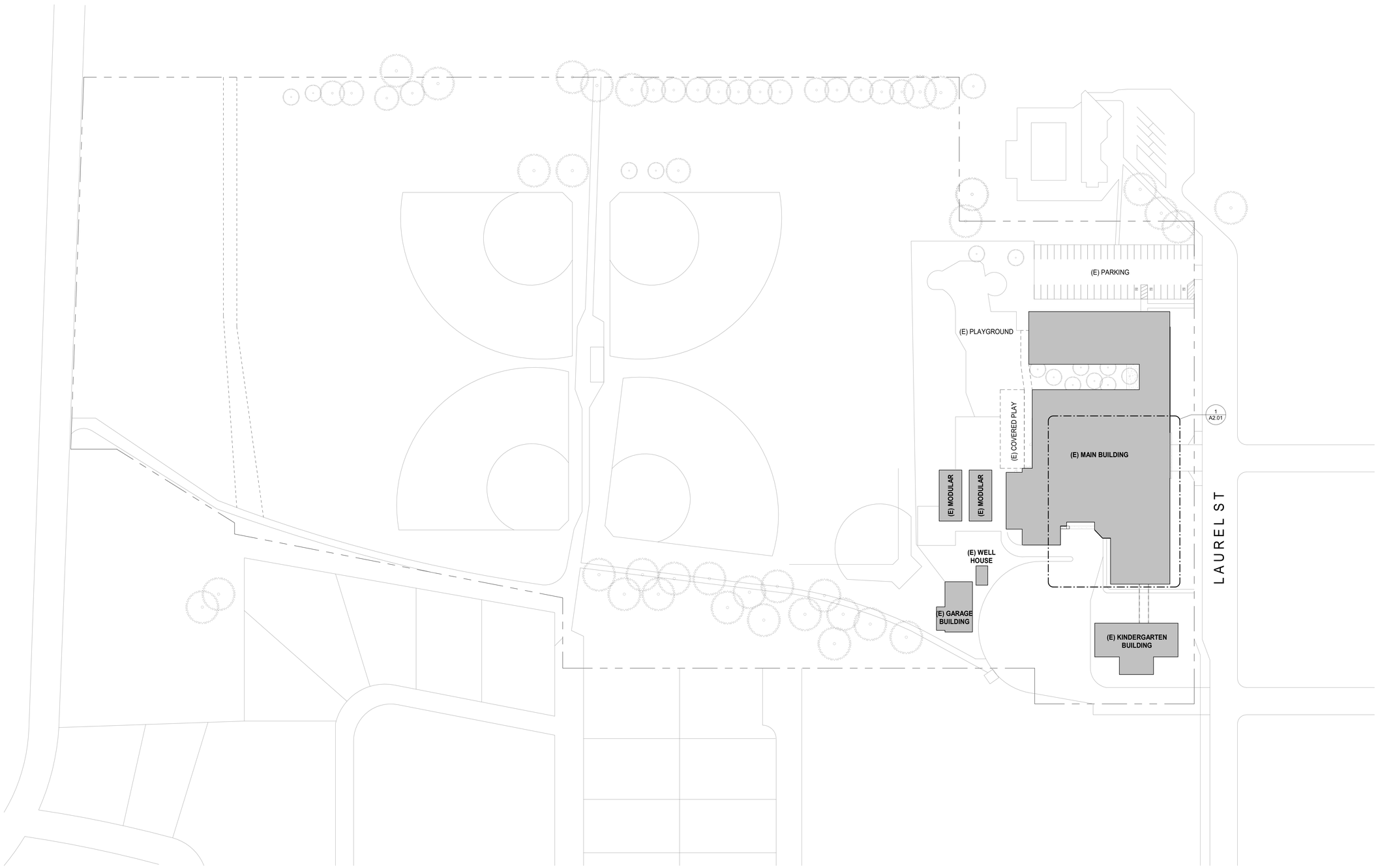

1 SITE PLAN
(1" = 50'-0")

NORTH

ONE INCH EQUALS FULL SCALE 9/19/2025 3:07:07 PM Autodesk Docs://P2973 Laurel ES Classrooms & Cafeteria/P2973_ARCH_R23.rvt

ZCS
524 Main Street, Suite 2
Oregon City, OR 97045
503.659.2205

Soderstrom Architects
1331 NW Lovejoy Street,
Suite 775
Portland, OR 97209

T 503-228-5617

sdra.com

LAUREL ELEMENTRY SCHOOL
1401 LAUREL ST,
JUNCTION CITY, OR 97448

LAUREL ELEMENTARY SCHOOL SEISMIC RETROFIT

REGISTERED ARCHITECT
4758
PORTLAND, OREGON
STATE OF OREGON

△	DESCRIPTION	DATE:

PROJECT NO.
WRK: P-2973-24
SDRA: 24059

DRAWN:	FL
CHECKED:	TH
DATE:	09/19/2025

ARCHITECTURAL SITE PLAN

A1.01

BID AND PERMIT SET

Attachment A

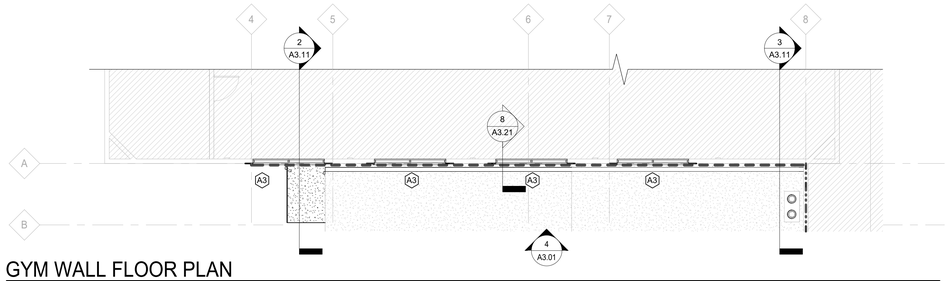

2 GYM WALL FLOOR PLAN

(1/8" = 1'-0")

DOOR SCHEDULE

MARK	PANEL SIZE WIDTH	PANEL SIZE HGT	TYPE	DOOR	FRAME	HW	FIRE RATING LABEL (MIN.)	NOTES
110A	3' - 0"	7' - 0"	(E)	(E) WD	(E) WD	(E)		ALTER (E) WD DOOR FRAME
125A	3' - 0"	7' - 0"	(E)	(E) HM-P	(E) HM-P	(E)	90 MIN	REINSTALL (E) DOOR SYSTEM
139A	3' - 0"	7' - 0"	A2	HM-P	HM-P			REF SPEC FOR HW
139B	6' - 0"	7' - 0"	A1	HM-P	HM-P			REF SPEC FOR HW

HM = HOLLOW METAL
WD= WOOD
P = PAINT
(E) = EXISTING

DOOR TYPES

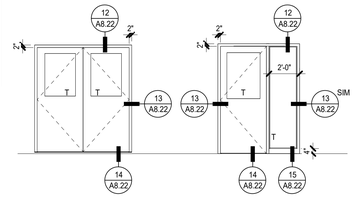

TYPE "A1"
HALF-LITE FLUSH PAIR

TYPE "A2"
HALF-LITE FLUSH W/ SIDELIGHT

PLAN NOTES

1. REINSTALL WALL MOUNTED EQUIPMENT OR SIGNAGE IN THEIR (E) LOCATIONS.
2. PAINT NEW GWB FINISH TO MATCH EXISTING. (P-1)
3. SALVAGE AND REINSTALL METAL BASE WHERE OCCURS. IF METAL BASE IS DAMAGED OR NO LONGER COVERS FULL LENGTH OF WALL, REPLACE FULL LENGTH OF WALL WITH RUBBER BASE.
4. PROVIDE NEW RUBBER BASE TO REPLACE DEMOLISHED RUBBER BASE, PAINT TO MATCH EXISTING.

PLAN LEGEND

- FRAMED WALL
- EXISTING WALL TO REMAIN
- EXISTING 2-HOUR RATED FIRE WALL
- INT WALL FINISH, PAINT TO MATCH EXISTING
- SEISMIC GAP
- AREA OF NO WORK (NOT IN CONTRACT)
- AREA OF CONC SLAB, ASSEMBLY 'XF1' UON
- AREA OF SHEET VINYL FLOORING W/ 4" COVED WALL BASE W/ ALUM TRIM
- AREA OF VINYL COMPOSITE TILE (VCT-1)

KEYNOTES

MARK	DESCRIPTION
0301	BID ALT 1: CONCRETE SLAB INFILL
0302	CONC SIDEWALK, SLOPE 1/4" / 1'-0" MIN
0307	CONC SIDEWALK
0401	BID ALT 1: REPAIR MASONRY VENEER AT SEISMIC JOINT
0506	NEW STEEL COL PER STRUCT. PAINT (P-2)
0602	WALL INFILL. MATCH (E) ADJACENT 2X SIZE
0604	REINSTALL (E) WOOD GATE, ADJUST AS NECESSARY
0605	REINSTALL (E) CASEWORK AND PATCH PAINT. NEW P-LAM COUNTERTOP
0615	SEISMIC JOINT COVER
0802	REINSTALL FIRE-RATED DOOR, HARDWARE, AND FRAME
0807	LEVEL DOOR THRESHOLD TO MEET ADA REQUIREMENTS. REPLACE DAMAGED VCT W/ VCT-2
0902	VINYL COMPOSITE TILE (VCT-1)
1202	REINSTALL (E) STUDENT ART TILE. VERIFY LOCATION WITH OWNER

DOOR AND WINDOW NOTES

1. "SAFETY GLAZING" SHALL BE PROVIDED IN ALL "HAZARDOUS LOCATIONS" DEFINED IN OSSC.
2. "T" ON FRAME TYPES INDICATES TEMPERED SAFETY GLAZING.
3. "L" ON FRAME TYPES INDICATES LAMINATED SAFETY GLAZING.
4. VERIFY IN FIELD ALL ROUGH OPENING DIMENSIONS.

WINDOW FRAME TYPES

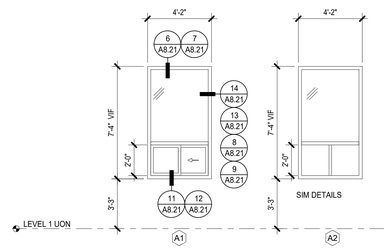

TRANSLUCENT WALL PANEL

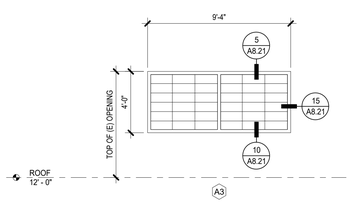

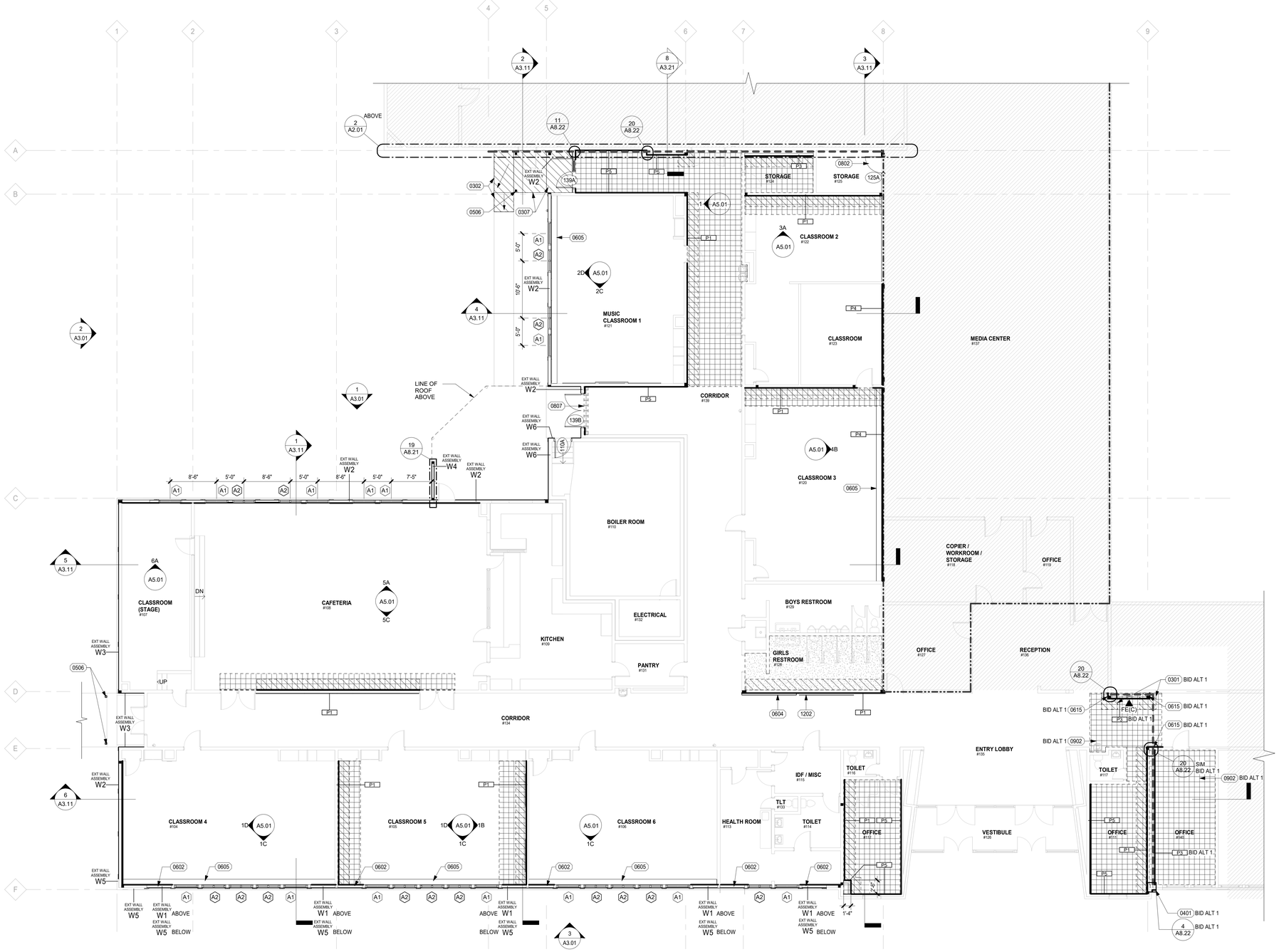

1 FLOOR PLAN

(1/8" = 1'-0")

ZCS
524 Main Street, Suite 2
Oregon City, OR 97045
503.659.2205

Soderstrom Architects
1331 NW Lovejoy Street,
Suite 775
Portland, OR 97209
T 503-228-5617
sdra.com

LAUREL ELEMENTRY SCHOOL
1401 LAUREL ST,
JUNCTION CITY, OR 97448

LAUREL ELEMENTARY SCHOOL SEISMIC RETROFIT

REGISTERED ARCHITECT 4758 PORTLAND, OR STATE OF OREGON

DESCRIPTION	DATE:

PROJECT NO.
WRK: P-2973-24
SDRA: 24059

DRAWN: FL
CHECKED: TH
DATE: 09/19/2025

PARTIAL FLOOR PLANS, TYPES, AND SCHEDULE

A2.01

BID AND PERMIT SET

ONE INCH EQUALS FULL SCALE 9/16/2025 3:07:10 PM Autodesk Docs://P2973 Laurel ES Classrooms & Cafeteria/P2973_ARCH_R23.rvt

Attachment A

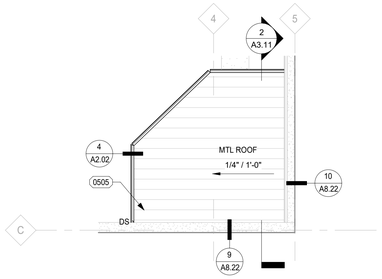

2 MTL ROOF PLAN
(1/8" = 1'-0")

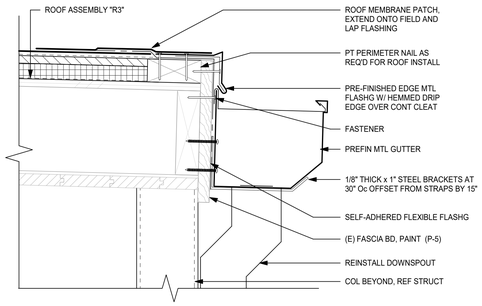

3 TPO ROOF CANOPY AT GUTTER
(3" = 1'-0")

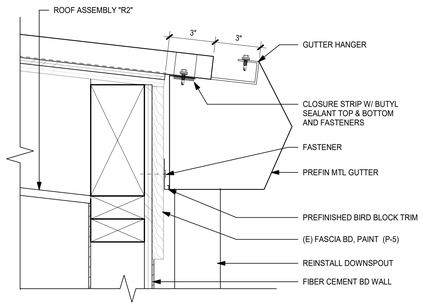

4 MTL ROOF CANOPY AT GUTTER
(3" = 1'-0")

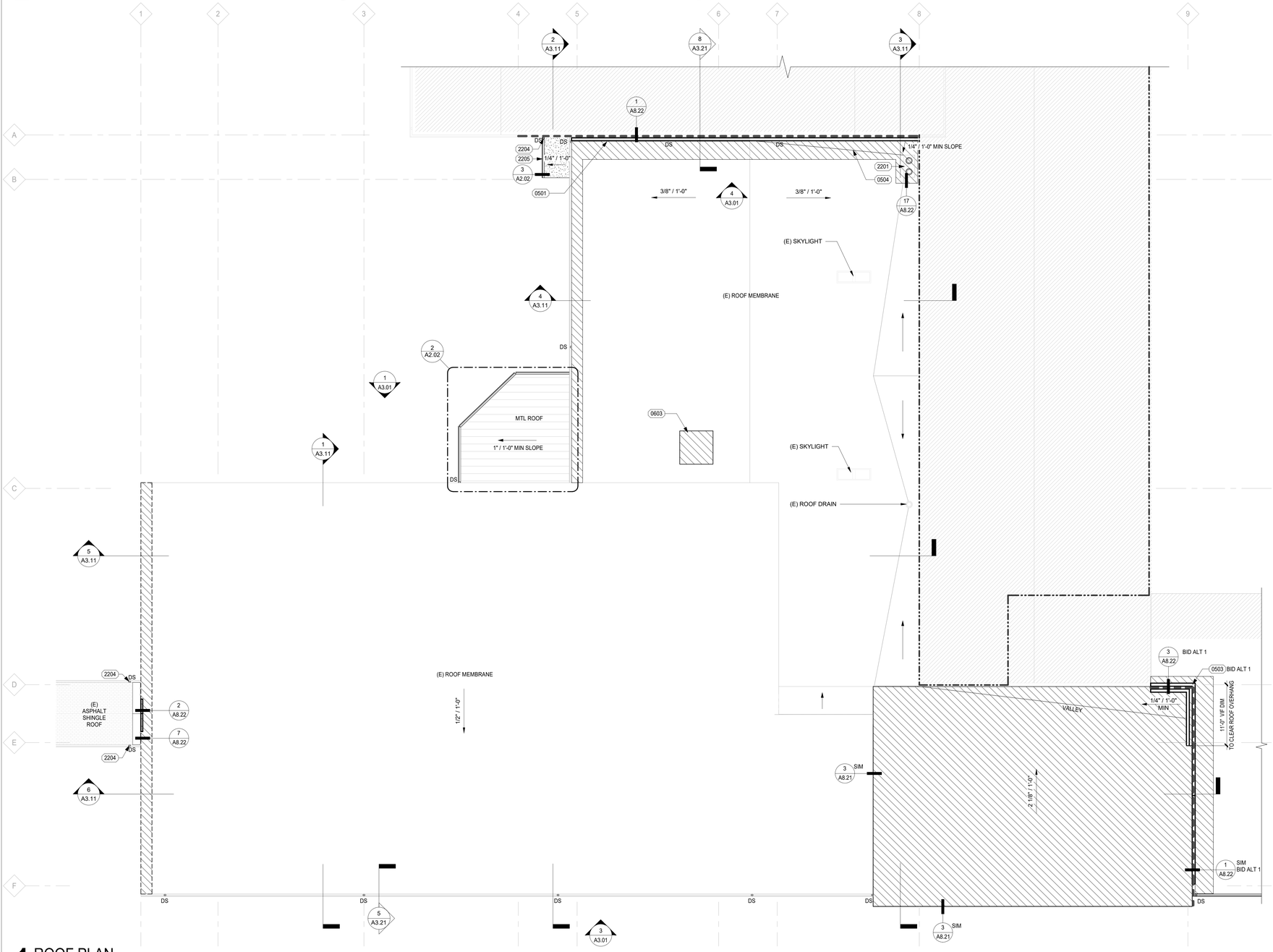

1 ROOF PLAN
(1/8" = 1'-0")

ROOF NOTES

1. ALL ROOF TOP EQUIPMENT WILL REQUIRE COLLATERAL PENETRATION FLASHING FOR CONDUIT AND/ OR PIPING. NOT ALL PENETRATIONS ARE INDICATED ON THIS PLAN, REFER TO THE MECHANICAL AND ELECTRICAL DRAWINGS AND THE SPECIFICATIONS MANUAL LOCATIONS AND QUANTITIES OF OTHER PENETRATIONS NOT INDICATED ON THIS PLAN.
2. ALL CRICKETS ARE ACHIEVED WITH TAPERED RIGID INSULATION WITH A 1/4" PER FOOT RETURN SLOPE TYPICAL AT FLAT ROOF AREA, UNLESS OTHERWISE NOTED.
3. ROOF ELEVATIONS SHOWN TO TOP OF THE ROOF SYSTEM (TOR), TOP OF PARAPET (T.O.P.), OR TOP OF WALL (T.O.W.). ALL ROOF ELEVATIONS ARE APPROXIMATE AND ARE TO BE FIELD VERIFIED.
4. REFER TO TYPICAL ROOF DETAILS FOR FURTHER INFORMATION.
5. ALL DOWNSPOUTS ARE TO MATCH (E) DIA UON.
6. PROVIDE NEW ROOF FLASHING, TRIM OR FASCIA BOARDS WHERE DAMAGED; PAINT NEW TO MATCH EXISTING.
7. PROVIDE NEW SOFFIT WHERE DAMAGED; PAINT NEW TO MATCH EXISTING.

ROOF LEGEND

X" / 12"	DIRECTION OF ROOF SLOPE
	ROOF DRAIN AND OVERFLOW
	AREA OF NO WORK (NOT IN CONTRACT)
	R-1 ROOFING ASSEMBLY
	R-2 ROOFING ASSEMBLY
	R-3 ROOFING ASSEMBLY
DS	DOWNSPOUT
	REINSTALL GUTTER(S) AND ASSOCIATED DOWNSPOUT(S); PATCH PAINT TO MATCH EXISTING
	SEISMIC GAP

KEYNOTES

MARK	DESCRIPTION
0501	LINE OF SEISMIC JOINT
0503	BID ALT 1: SEISMIC JOINT COVER AND PARAPET WALL
0504	ROOF CRICKET
0505	REINSTALL MTL ROOF PANEL, GUTTER, AND DOWNSPOUT
0603	INFILL ROOF STRUCTURE PER STRUCT
2201	ROOF AND OVERFLOW DRAIN
2204	DOWNSPOUT, ATTACH TO COLUMN. PAINT (P-2)
2205	MTL GUTTER, PAINT (P-2)

ZCS
524 Main Street, Suite 2
Oregon City, OR 97045
503.659.2205

Soderstrom Architects
1331 NW Lovejoy Street,
Suite 775
Portland, OR 97209
T 503-228-5617
sdra.com

LAUREL ELEMENTRY SCHOOL
1401 LAUREL ST,
JUNCTION CITY, OR 97448

LAUREL ELEMENTARY SCHOOL SEISMIC RETROFIT

REGISTERED ARCHITECT 4758 PORTLAND, OREGON STATE OF OREGON

△	DESCRIPTION	DATE:

PROJECT NO.
WRK: P-2973-24
SDRA: 24059

DRAWN:	FL
CHECKED:	TH
DATE:	09/19/2025

PARTIAL ROOF PLANS

A2.02

BID AND PERMIT SET

KEY PLAN

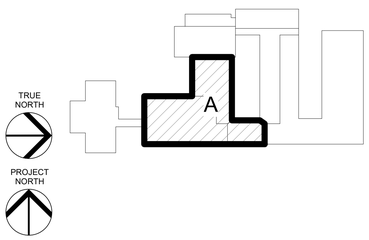

ONE INCH EQUALS FULL SCALE 9/16/2025 3:07:11 PM Autodesk Docs://P2973 Laurel ES Classrooms & Cafeteria/P2973_ARCH_R23.rvt

Attachment A

ELEVATION LEGEND

SEISMIC GAP

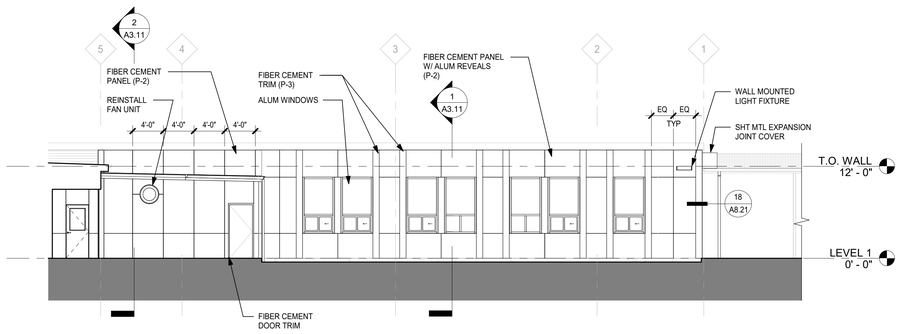

1 EXTERIOR ELEVATION - WEST

(1/8" = 1'-0")

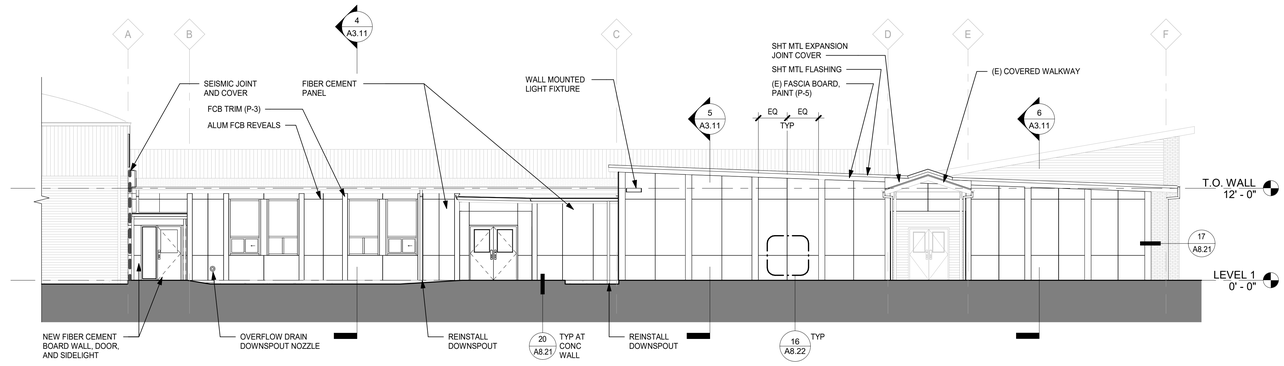

2 EXTERIOR ELEVATION - SOUTH

(1/8" = 1'-0")

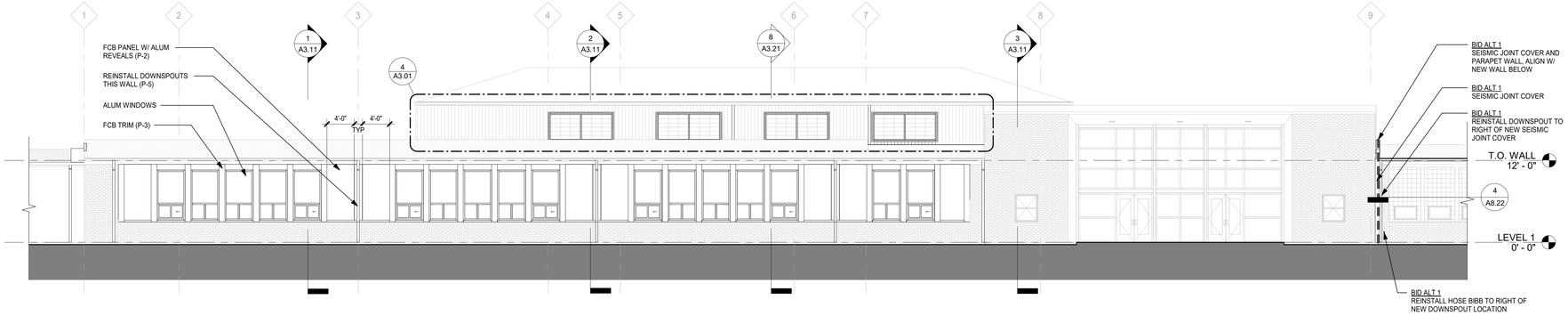

3 EXTERIOR ELEVATION - EAST

(1/8" = 1'-0")

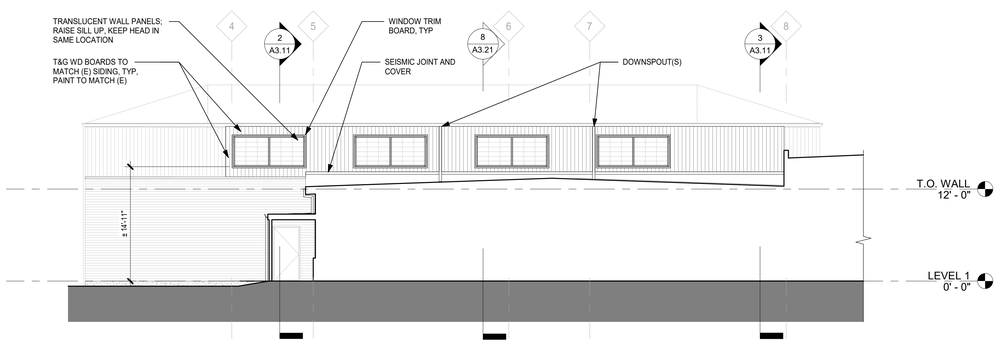

4 EXTERIOR GYM ELEVATION - EAST

(1/8" = 1'-0")

ONE INCH EQUALS FULL SCALE 9/16/2025 3:07:14 PM Autodesk Docs://P2973 Laurel ES Classrooms & Cafeteria/P2973_ARCH_R23.rvt

ZCS
524 Main Street, Suite 2
Oregon City, OR 97045
503.659.2205

Soderstrom Architects
1331 NW Lovejoy Street, Suite 775
Portland, OR 97209
T 503-228-5617
sdra.com

LAUREL ELEMENTRY SCHOOL
1401 LAUREL ST,
JUNCTION CITY, OR 97448

LAUREL ELEMENTARY SCHOOL SEISMIC RETROFIT

REGISTERED ARCHITECT 4758 PORTLAND, OREGON STATE OF OREGON

△	DESCRIPTION	DATE:

PROJECT NO.
WRK: P-2973-24
SDRA: 24059

DRAWN:	FL
CHECKED:	TH
DATE:	09/19/2025

EXTERIOR ELEVATIONS

A3.01

BID AND PERMIT SET

Attachment A

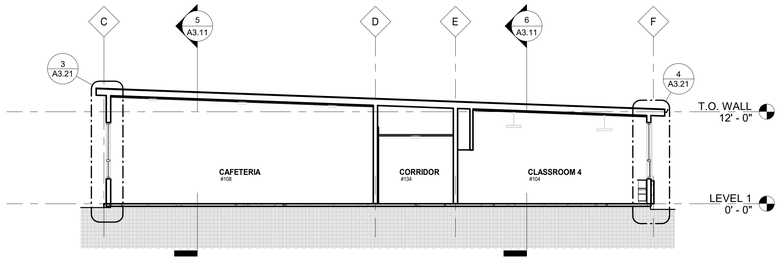

1 BUILDING SECTION - CLASSROOM AND CAFETERIA

(1/8" = 1'-0")

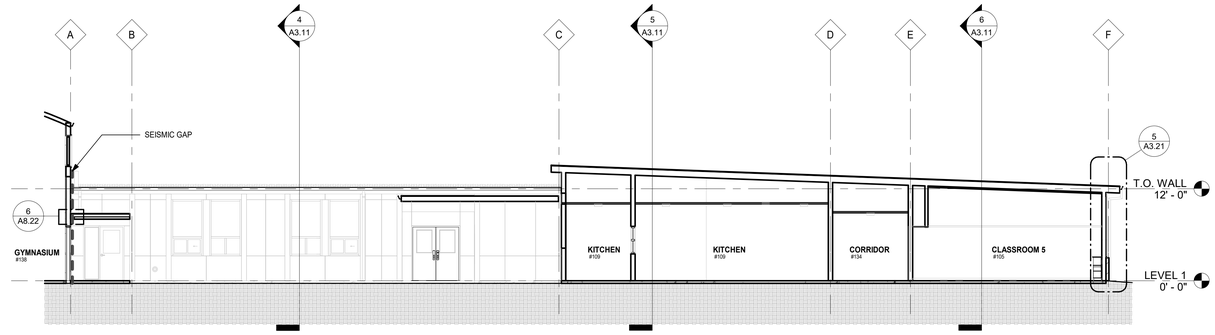

2 BUILDING SECTION - CANOPY, CAFE, AND CLASSROOMS

(1/8" = 1'-0")

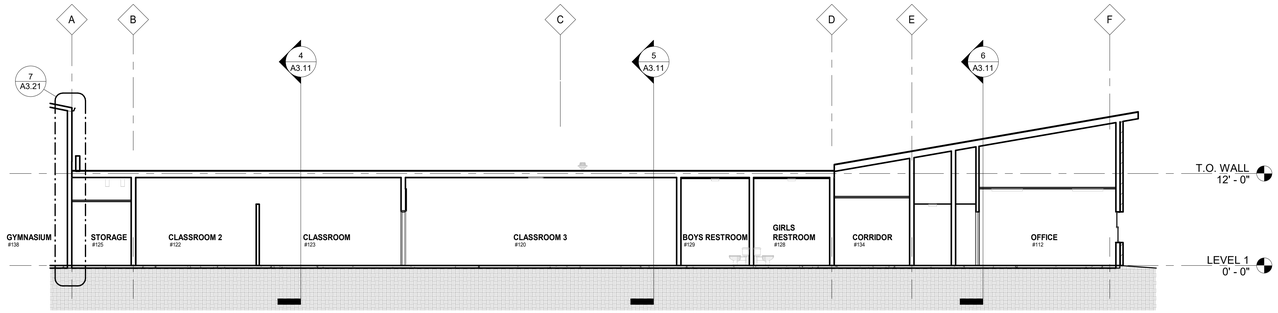

3 BUILDING SECTION - GRID 8

(1/8" = 1'-0")

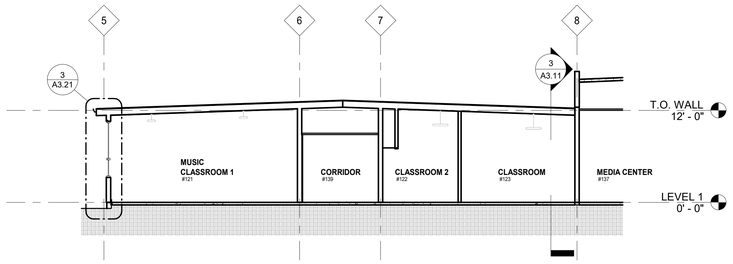

4 BUILDING SECTION - CLASSROOMS

(1/8" = 1'-0")

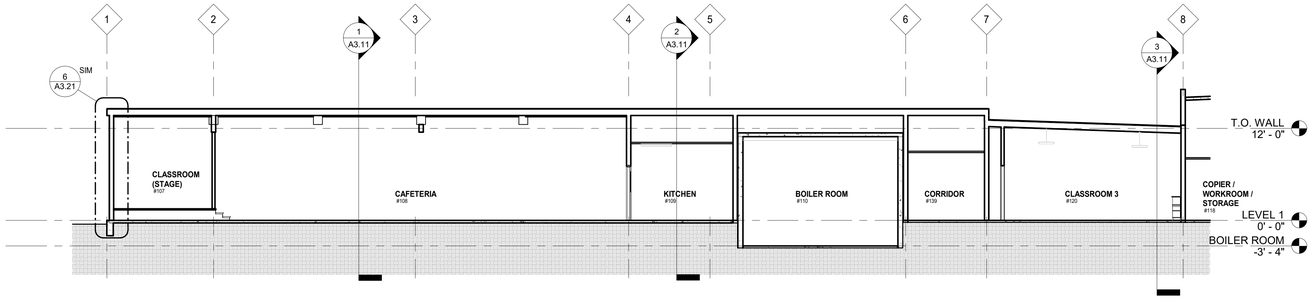

5 BUILDING SECTION - CAFETERIA

(1/8" = 1'-0")

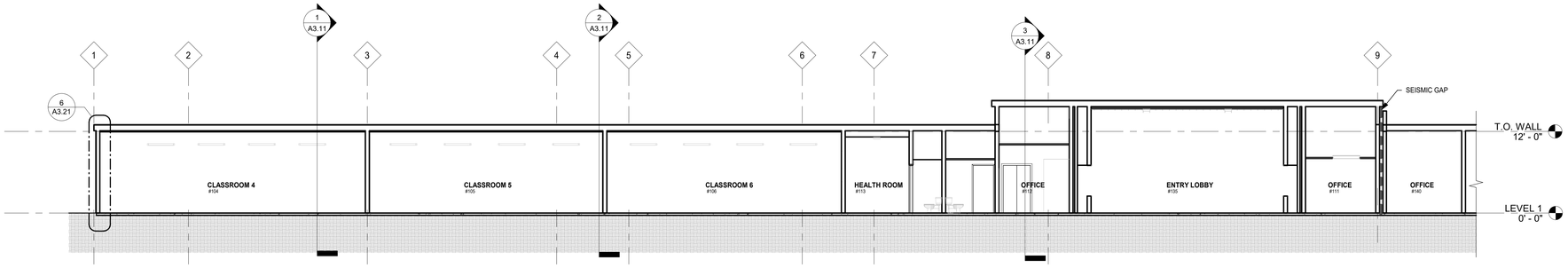

6 BUILDING SECTION - CLASSROOMS

(1/8" = 1'-0")

ONE INCH EQUALS FULL SCALE

9/18/2025 3:07:15 PM Autodesk Docs://P2973 Laurel ES Classrooms & Cafeteria/P2973_ARCH_R23.rvt

ZCS
524 Main Street, Suite 2
Oregon City, OR 97045
503.659.2205

Soderstrom Architects
1331 NW Lovejoy Street,
Suite 775
Portland, OR 97209
T 503-228-5617
sdra.com

LAUREL ELEMENTRY SCHOOL
1401 LAUREL ST,
JUNCTION CITY, OR 97448

LAUREL ELEMENTARY SCHOOL SEISMIC RETROFIT

REGISTERED ARCHITECT
4758
STATE OF OREGON

△	DESCRIPTION	DATE:

PROJECT NO.
WRK: P-2973-24
SDRA: 24059

DRAWN:	FL
CHECKED:	TH
DATE:	09/19/2025

BUILDING SECTIONS

A3.11

BID AND PERMIT SET

Attachment A

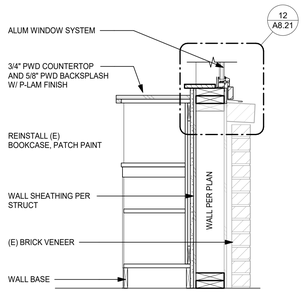

1 BOOKCASE AT WINDOW
(1" = 1'-0")

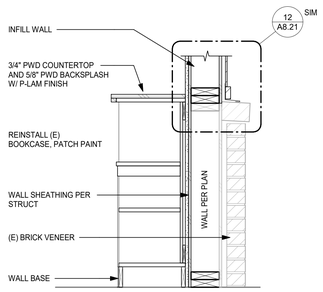

2 BOOKCASE AT WALL INFILL
(1" = 1'-0")

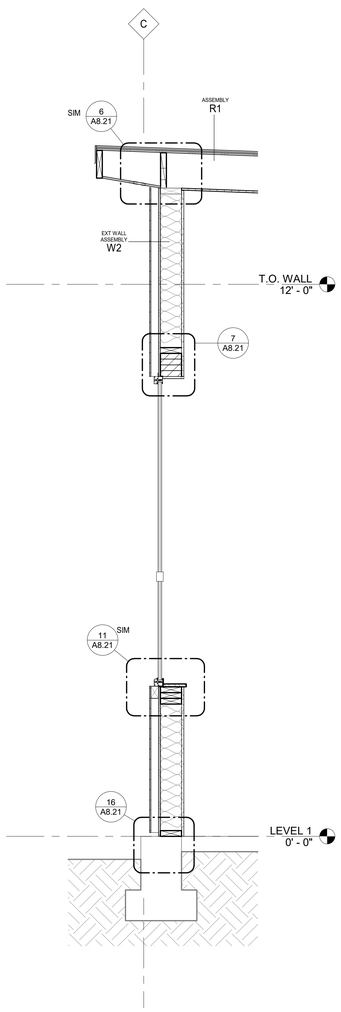

3 WALL SECTION
(3/4" = 1'-0")

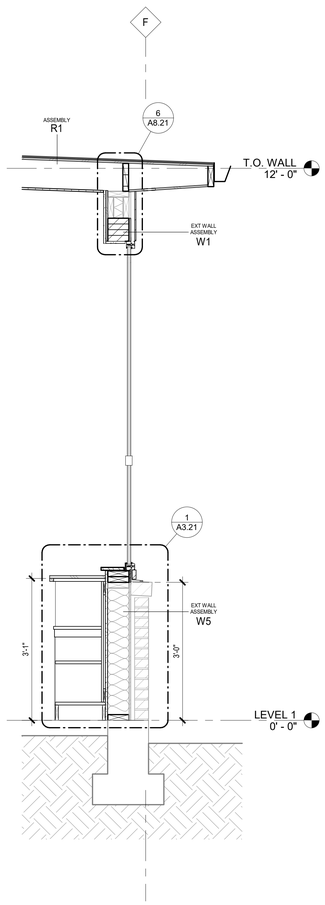

4 WALL SECTION
(3/4" = 1'-0")

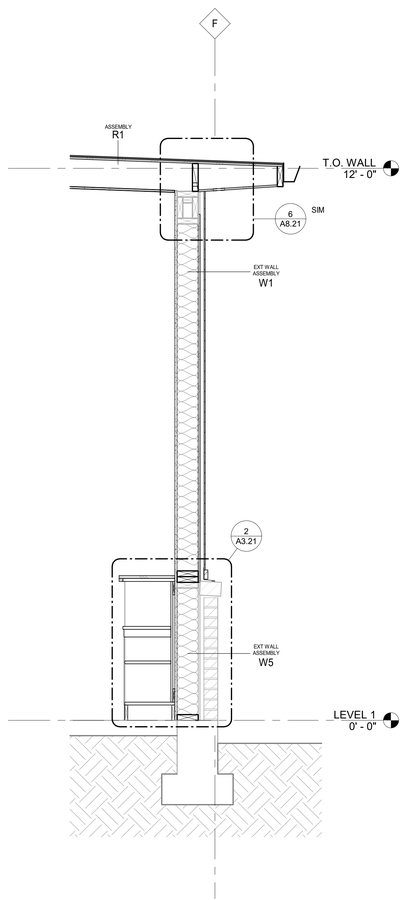

5 WALL SECTION
(3/4" = 1'-0")

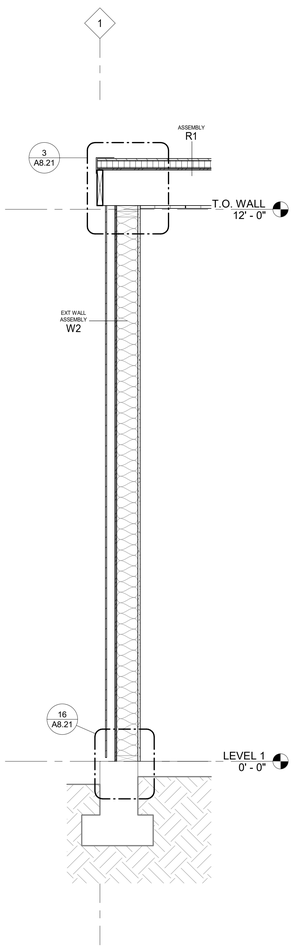

6 WALL SECTION
(3/4" = 1'-0")

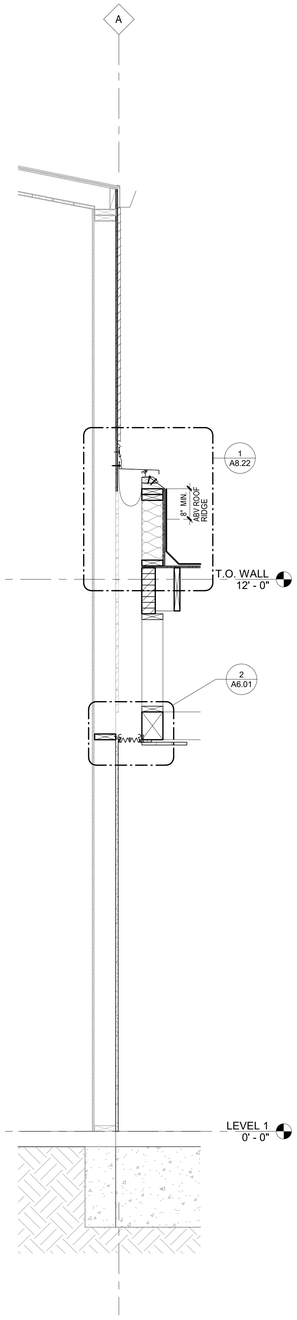

7 WALL SECTION
(3/4" = 1'-0")

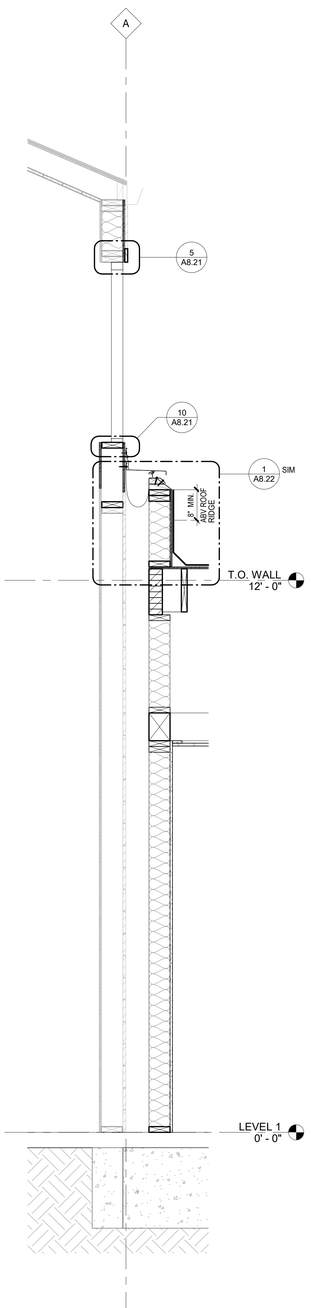

8 WALL SECTION
(3/4" = 1'-0")

ONE INCH EQUALS FULL SCALE 9/16/2025 3:07:16 PM Autodesk Docs://P2973.Laurel ES Classrooms & Cafeteria/P2973_ARCH_R23.rvt

ZCS
524 Main Street, Suite 2
Oregon City, OR 97045
503.659.2205

Soderstrom Architects
1331 NW Lovejoy Street,
Suite 775
Portland, OR 97209
T 503-228-5617
sdra.com

LAUREL ELEMENTRY SCHOOL
1401 LAUREL ST,
JUNCTION CITY, OR 97448

LAUREL ELEMENTARY SCHOOL SEISMIC RETROFIT

REGISTERED ARCHITECT 4758 PORTLAND, OREGON STATE OF OREGON

△	DESCRIPTION	DATE:

PROJECT NO.
WRK: P-2973-24
SDRA: 24059

DRAWN:	FL
CHECKED:	TH
DATE:	09/19/2025

WALL SECTIONS AND DETAILS

A3.21

BID AND PERMIT SET

Attachment A

KEYNOTES

MARK	DESCRIPTION
0605	REINSTALL (E) CASEWORK AND PATCH PAINT. NEW P-LAM COUNTERTOP
0618	1X TRIM BD, MATCH (E), PAINT
0909	REINSTALL (E) METAL WALL BASE UNLESS DAMAGED. REPLACE WITH RB-1 FULL LENGTH OF WALL.
0910	TRIM BOARD TO MATCH (E). PAINT P-1
1001	REINSTALL MARKER BOARD PANEL WHERE OCCURS IN (E) LOCATION
1002	REINSTALL TACKBOARD PANEL WHERE OCCURS IN (E) LOCATION
1003	ACOUSTIC WALL PANEL
1101	REINSTALL ELECTRONIC DISPLAY SCREEN WITH WALL MOUNT
1201	SECURITY WINDOW SHADE
1202	REINSTALL (E) STUDENT ART TILE. VERIFY LOCATION WITH OWNER
2301	REINSTALL MECH GRILLES IN (E) LOCATION
2302	MECHANICAL GRILLE
2601	REMOVE AND SALVAGE (E) JUNCTION BOXES, CONDUITS, AND EQUIP AS REQ'D; REINSTALL INTO WALL IF STILL REQ'D

NOTE: ALL CORRIDOR WALLS, SIM

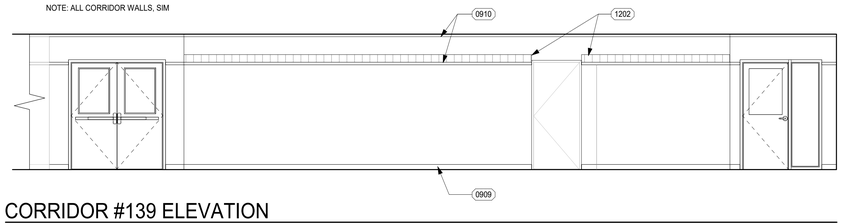

1 CORRIDOR #139 ELEVATION
(1/4" = 1'-0")

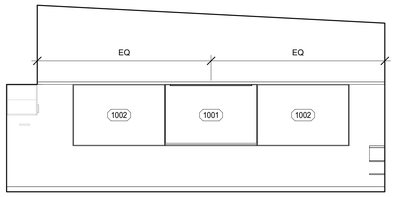

1B TYP CLASSROOM ELEVATION
(1/4" = 1'-0")

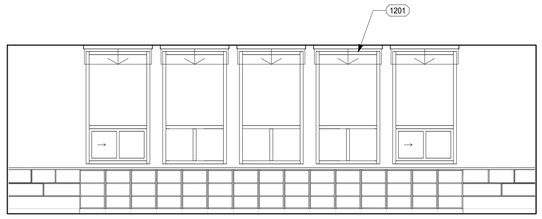

1C TYP CLASSROOM ELEVATION
(1/4" = 1'-0")

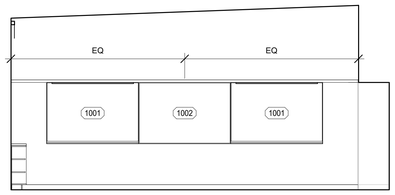

1D TYP CLASSROOM ELEVATION
(1/4" = 1'-0")

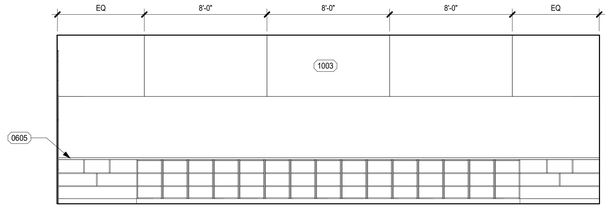

4B CLASSROOM 3 ELEVATION
(1/4" = 1'-0")

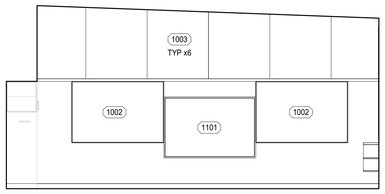

2C MUSIC CLASSROOM 1 ELEVATION
(1/4" = 1'-0")

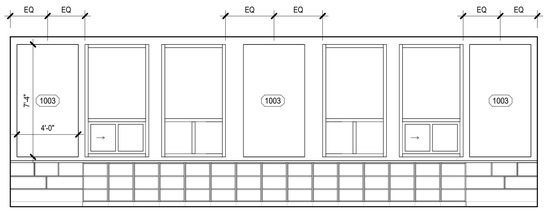

2D MUSIC CLASSROOM 1 ELEVATION
(1/4" = 1'-0")

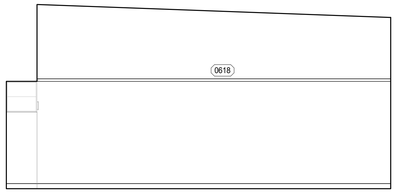

3A CLASSROOM 2 ELEVATION
(1/4" = 1'-0")

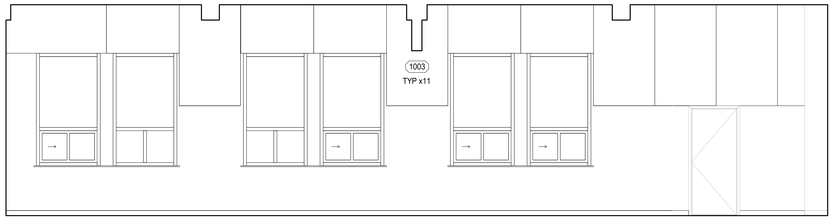

5A CAFETERIA ELEVATION
(1/4" = 1'-0")

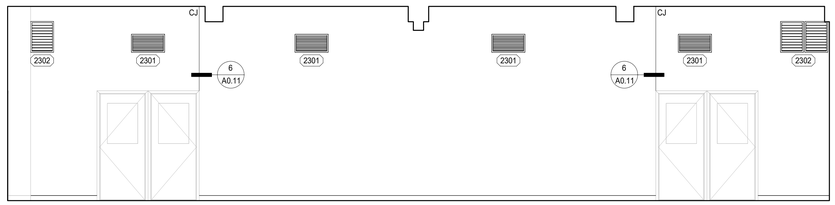

5C CAFETERIA ELEVATION
(1/4" = 1'-0")

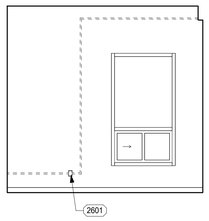

6A STAGE ELEVATION
(1/4" = 1'-0")

ZCS
524 Main Street, Suite 2
Oregon City, OR 97045
503.659.2205

Soderstrom Architects
1331 NW Lovejoy Street,
Suite 775
Portland, OR 97209

T 503-228-5617

sdra.com

LAUREL ELEMENTRY SCHOOL
1401 LAUREL ST,
JUNCTION CITY, OR 97448

LAUREL ELEMENTARY SCHOOL SEISMIC RETROFIT

REGISTERED ARCHITECT
4758
PORTLAND, OR
STATE OF OREGON

△	DESCRIPTION	DATE:

PROJECT NO.
WRK: P-2973-24
SDRA: 24059

DRAWN:	FL
CHECKED:	TH
DATE:	09/19/2025

INTERIOR ELEVATIONS

A5.01

BID AND PERMIT SET

ONE INCH EQUALS FULL SCALE 9/16/2025 3:07:18 PM Autodesk Docs://P2973 Laurel ES Classrooms & Cafeteria/P2973_ARCH_R23.rvt

Attachment A

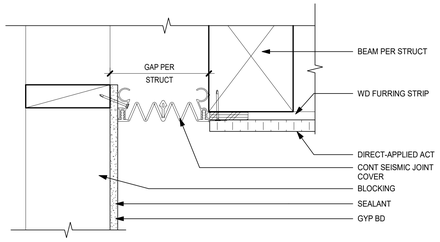

2 SEISMIC JOINT COVER AT CEILING
(3" = 1'-0")

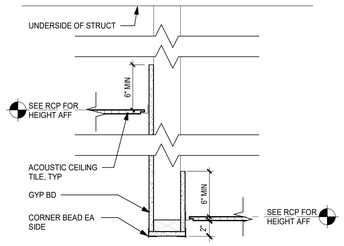

3 SOFFIT SECTION
(1 1/2" = 1'-0")

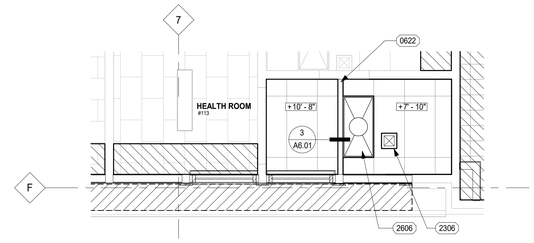

4 PARTIAL REFLECTED CEILING PLAN - HEALTH RM #113
(1/4" = 1'-0")

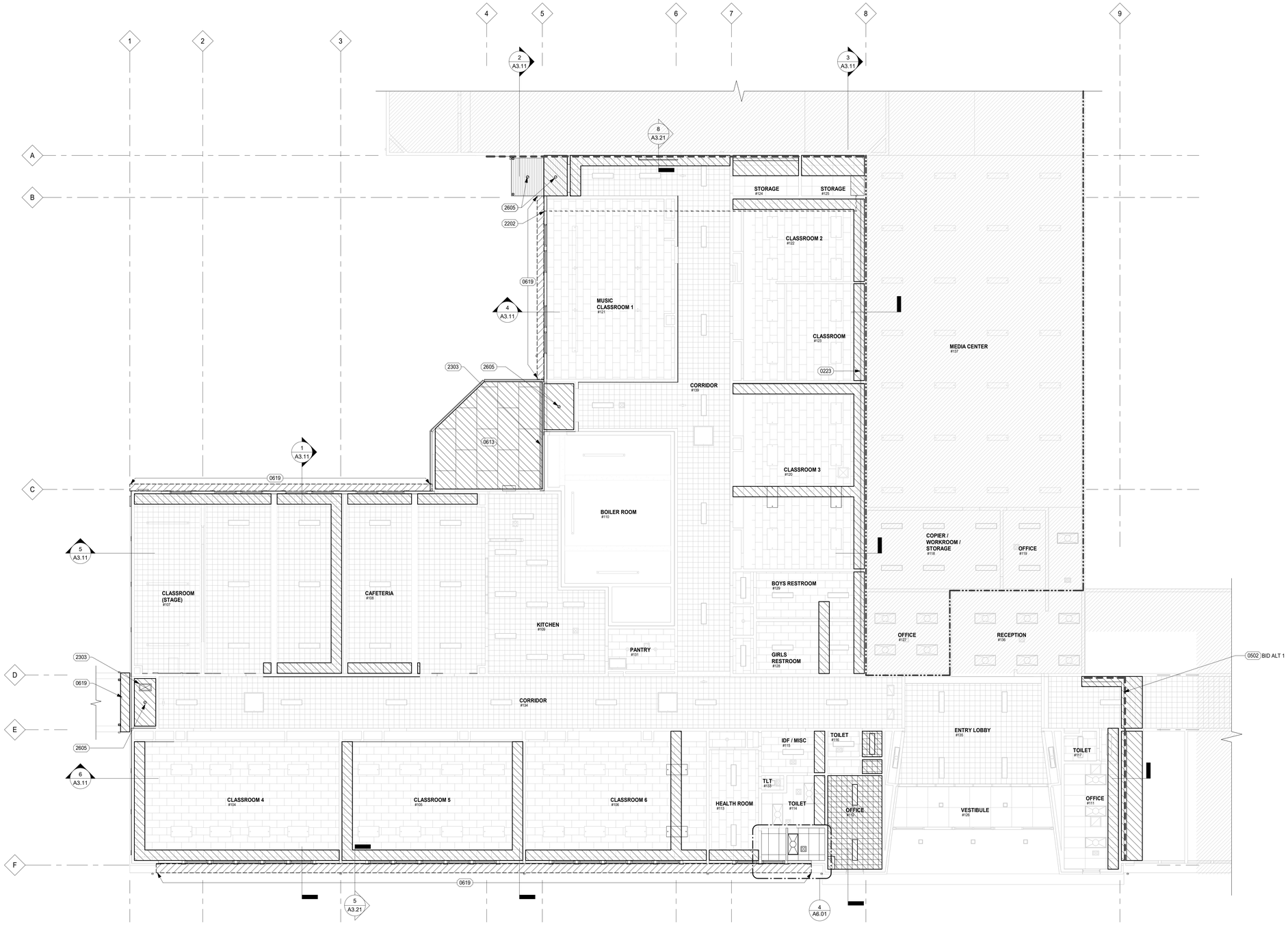

1 REFLECTED CEILING PLAN
(1/8" = 1'-0")

CEILING NOTES

1. REPORT TO ARCHITECT ANY CONFLICTS BETWEEN ELECTRICAL, MECHANICAL, OR STRUCTURAL DRAWINGS AND THIS LAYOUT.
2. ALL VISIBLE STRUCTURE, DUCTWORK, PIPES, CONDUITS, AND OTHER ASSOCIATED COMPONENTS NOT FULLY CONCEALED BEHIND A CONTINUOUS CEILING TO BE PAINTED.
3. REINSTALL CEILING MOUNTED EQUIPMENT OR SIGNAGE IN THEIR (E) LOCATION AS REQ'D.
4. REINSTALL LIGHT FIXTURES AND MECH GRILLES IN THEIR (E) LOCATION AS REQ'D.

CEILING LEGEND

- EXISTING WALL TO REMAIN
- EXISTING 2-HOUR RATED FIRE WALL
- AREA OF NO WORK (NOT IN CONTRACT)
- SEISMIC GAP
- SURFACE-MOUNT ACOUSTIC CEILING TILES
- REINSTALL SOFFIT AND SOFFIT VENTS
- 12x12 ACOUSTICAL CEILING TILE
- 24x48 ACOUSTICAL CEILING TILE
- 16x32 CEILING MOUNTED TILE
- +X'-X" — FINISH CEILING HEIGHT ABOVE FINISH FLOOR
- LIGHT FIXTURES
- ACCESS PANEL
- AIR TERMINALS
- EXIT SIGN

KEYNOTES

MARK	DESCRIPTION
0223	(E) FIRE SPRINKLER LINE, CEILING MOUNT
0502	SEISMIC JOINT COVER
0613	REINSTALL PLYWOOD CEILING PANELS AND SOFFIT VENTS
0619	REINSTALL SOFFIT PANELS AND VENTS
0622	SOFFIT WALL
2202	ROOF OVERFLOW DRAINAGE PIPE; DISCHARGE TO BRASS DRAIN NOZZLE 18" AFF AT EXT WALL
2303	SOFFIT VENT, SIZE TO MATCH (E)
2306	REINSTALL CEILING VENT
2605	6" DIA RECESSED LIGHT FIXTURE, TYP
2606	REINSTALL LIGHT FIXTURE

KEY PLAN

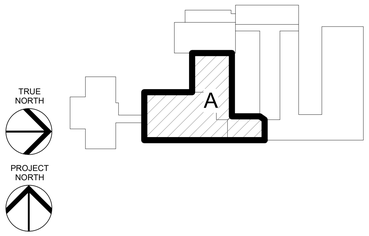

ZCS
524 Main Street, Suite 2
Oregon City, OR 97045
503.659.2205

Soderstrom Architects
1331 NW Lovejoy Street, Suite 775
Portland, OR 97209
T 503-228-5617
sdra.com

LAUREL ELEMENTRY SCHOOL
1401 LAUREL ST,
JUNCTION CITY, OR 97448

LAUREL ELEMENTARY SCHOOL SEISMIC RETROFIT

REGISTERED ARCHITECT 4758 Mauricio Pastrana STATE OF OREGON

△	DESCRIPTION	DATE:

PROJECT NO.
WRK: P-2973-24
SDRA: 24059

DRAWN:	FL
CHECKED:	TH
DATE:	09/19/2025

PARTIAL REFLECTED CEILING PLAN

A6.01

BID AND PERMIT SET

ONE INCH EQUALS FULL SCALE 9/16/2025 3:07:20 PM Autodesk Docs://P2973 Laurel ES Classrooms & Cafeteria/P2973_ARCH_R23.rvt

Attachment A

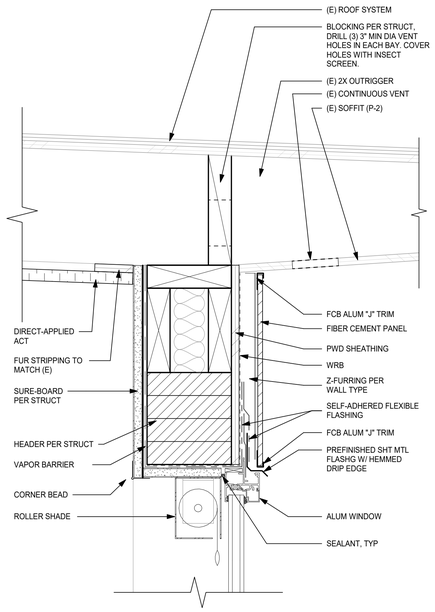

6 ALUM WINDOW HEAD AND OVERHANG
(3" = 1'-0")

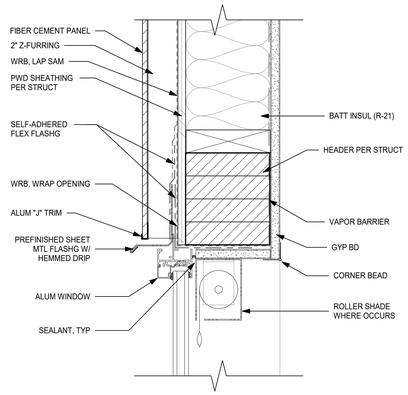

7 ALUM WINDOW HEAD
(3" = 1'-0")

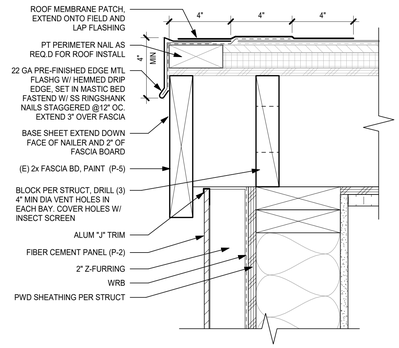

NOTE: FIELD VERIFY (E) CONDITIONS

3 ROOF EAVE AT FCB WALL
(3" = 1'-0")

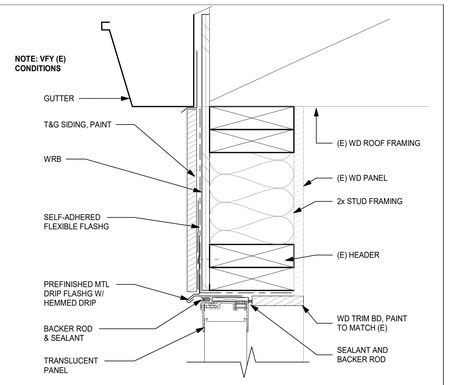

5 TRANSLUCENT PANEL HEAD
(3" = 1'-0")

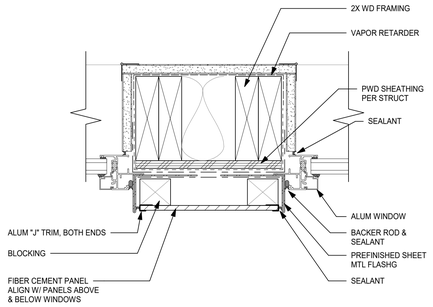

8 ALUM WINDOW JAMB
(3" = 1'-0")

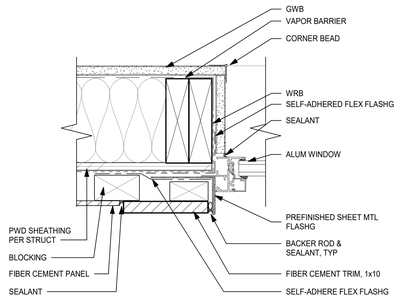

9 ALUM WINDOW JAMB
(3" = 1'-0")

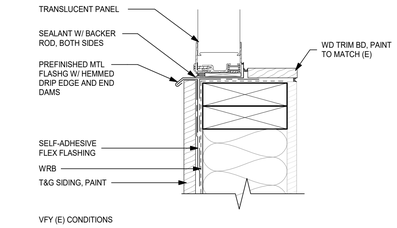

VFY (E) CONDITIONS

10 TRANSLUCENT PANEL SILL
(3" = 1'-0")

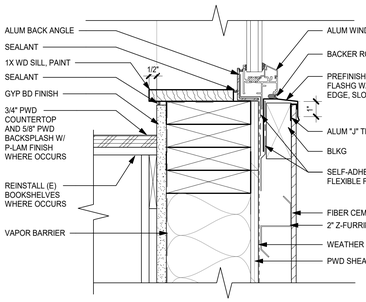

11 ALUM WINDOW SILL
(3" = 1'-0")

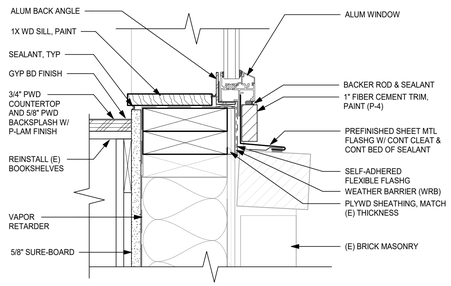

12 ALUM WINDOW SILL AT BRICK
(3" = 1'-0")

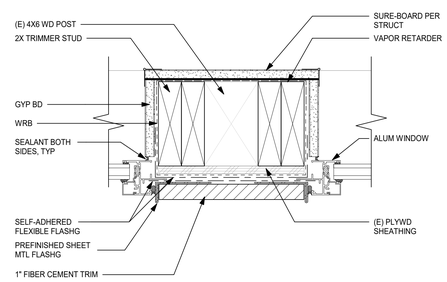

13 ALUM WINDOW JAMB ABOVE BRICK
(3" = 1'-0")

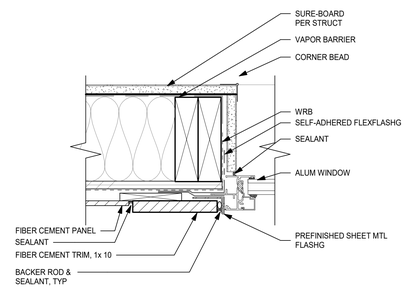

14 ALUM WINDOW JAMB ABOVE BRICK
(3" = 1'-0")

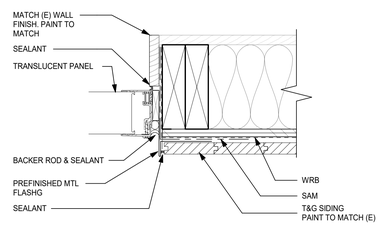

15 TRANSLUCENT PANEL JAMB
(3" = 1'-0")

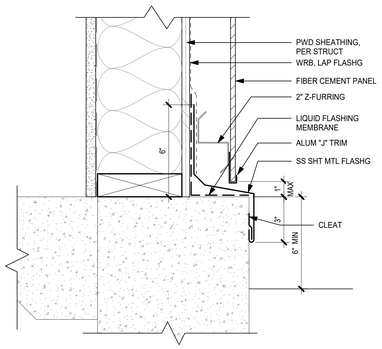

16 FCB BASE @ CONC FOOTING
(3" = 1'-0")

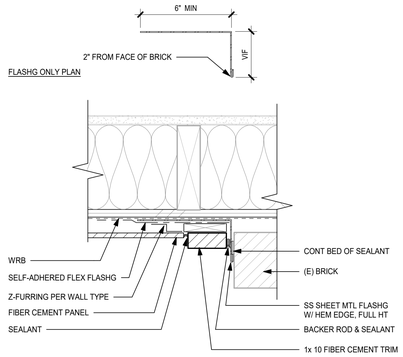

17 FIBER CEMENT BOARD AT BRICK
(3" = 1'-0")

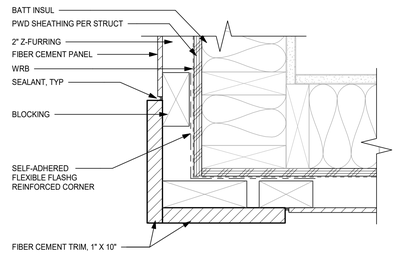

18 FIBER CEMENT BOARD AT CORNER
(3" = 1'-0")

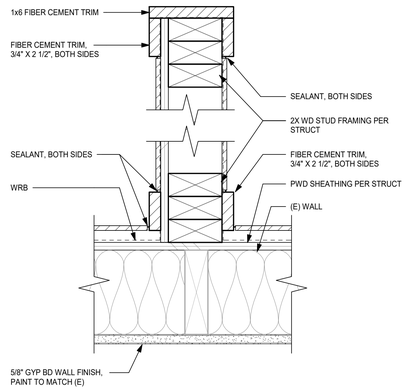

19 FIBER CEMENT BOARD WALL PLAN
(3" = 1'-0")

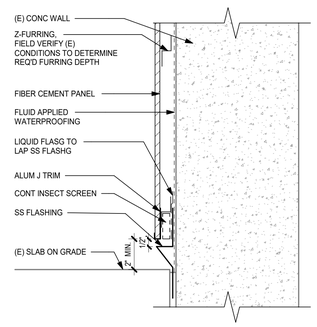

20 FIBER CEMENT BOARD AT CONC WALL
(3" = 1'-0")

ZCS
524 Main Street, Suite 2
Oregon City, OR 97045
503.659.2205

Soderstrom Architects
1331 NW Lovejoy Street, Suite 775
Portland, OR 97209
T 503-228-5617
sdra.com

LAUREL ELEMENTRY SCHOOL
1401 LAUREL ST,
JUNCTION CITY, OR 97448

LAUREL ELEMENTARY SCHOOL SEISMIC RETROFIT

REGISTERED ARCHITECT 4758 PORTLAND, OREGON STATE OF OREGON

△	DESCRIPTION	DATE:

PROJECT NO.
WRK: P-2973-24
SDRA: 24059

DRAWN:	FL
CHECKED:	TH
DATE:	09/19/2025

EXTERIOR DETAILS

A8.21

BID AND PERMIT SET

ONE INCH EQUALS FULL SCALE 9/16/2025 3:07:20 PM Autodesk Docs://P2973 Laurel ES Classrooms & Cafeteria/P2973_ARCH_R23.rvt

Attachment A

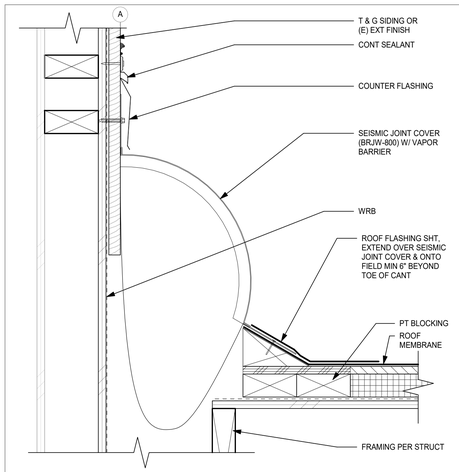

1 SEISMIC JOINT AT ROOF & WALL
(3" = 1'-0")

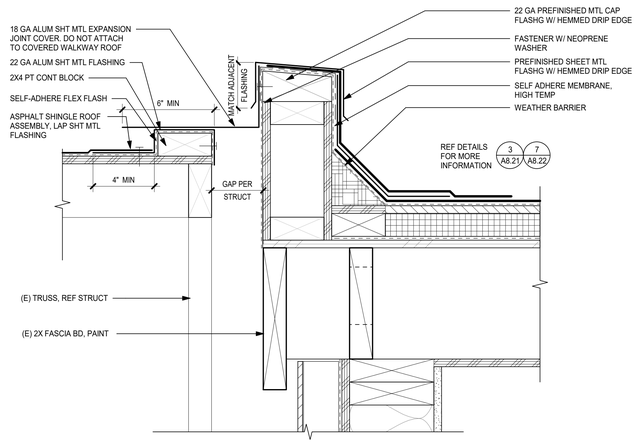

2 ROOF CURB & SEISMIC JOINT AT COVERED WALK
(3" = 1'-0")

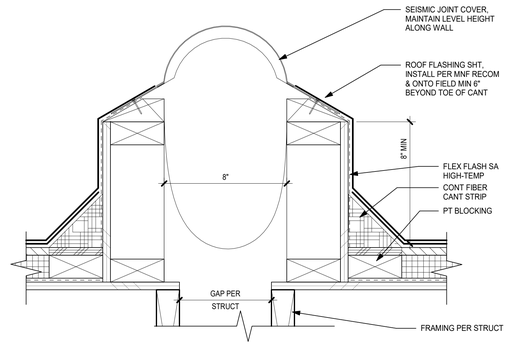

3 SEISMIC JOINT AT ROOF (BID ALT 1)
(3" = 1'-0")

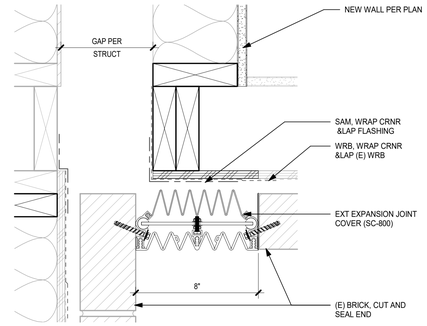

4 SEISMIC JOINT AT BRICK - PLAN (BID ALT 1)
(3" = 1'-0")

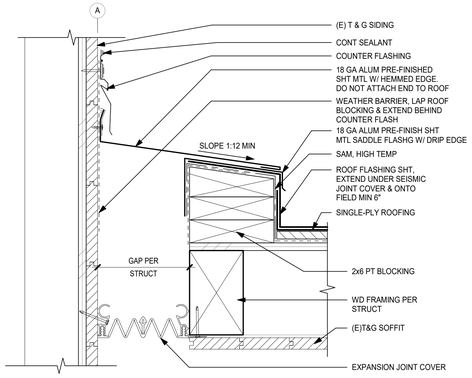

6 SEISMIC JOINT AT CANOPY
(3" = 1'-0")

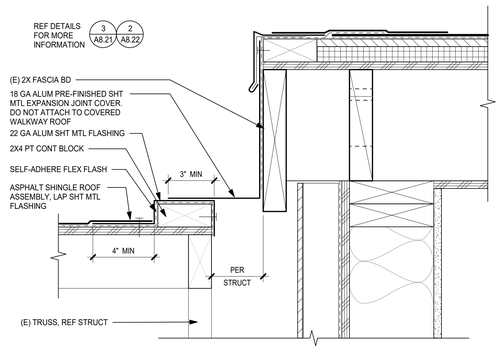

7 SEISMIC JOINT AT COVERED WALKWAY
(3" = 1'-0")

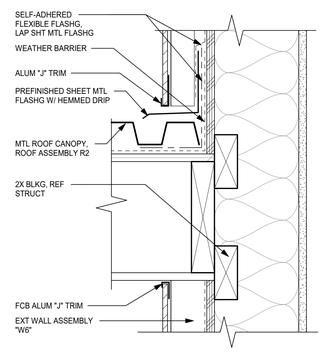

9 MTL CANOPY AT FCB WALL
(3" = 1'-0")

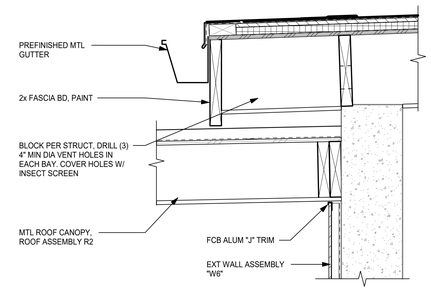

10 MTL CANOPY AT CONC WALL
(1 1/2" = 1'-0")

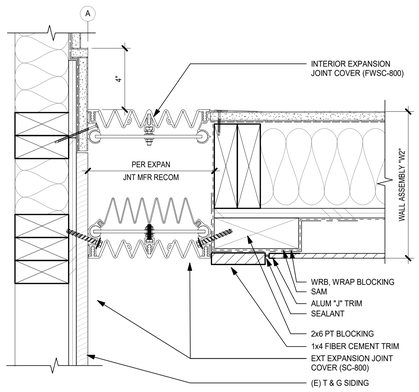

11 SEISMIC JOINT - PLAN DETAIL
(3" = 1'-0")

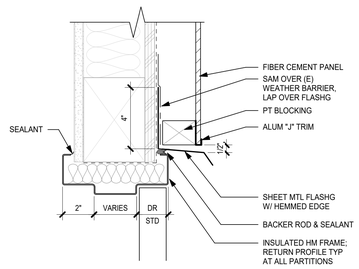

12 EXT HM HEAD
(3" = 1'-0")

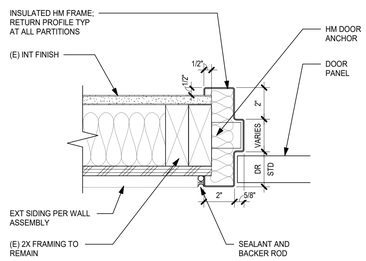

13 EXT HM JAMB
(3" = 1'-0")

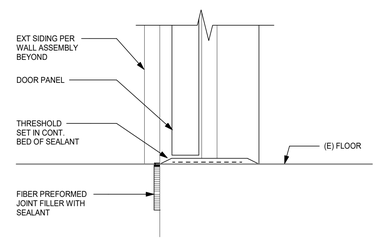

14 EXT HM THRESHOLD
(3" = 1'-0")

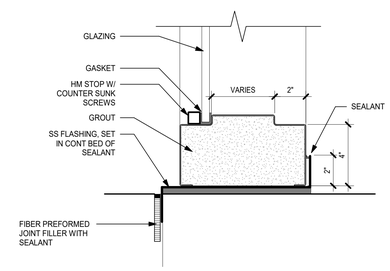

15 EXT HM WINDOW SILL
(3" = 1'-0")

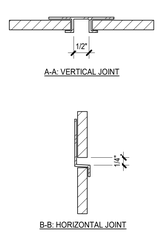

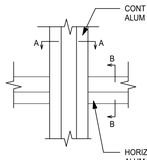

16 FIBER CEMENT PANEL ALUM REVEAL
(6" = 1'-0")

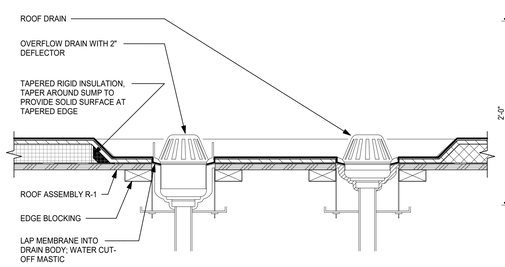

17 ROOF DRAIN AND OVERFLOW
(1 1/2" = 1'-0")

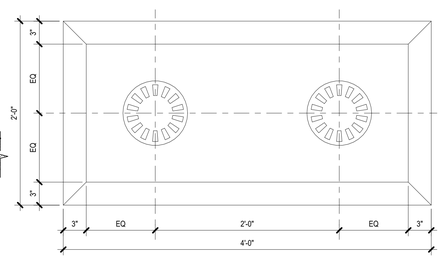

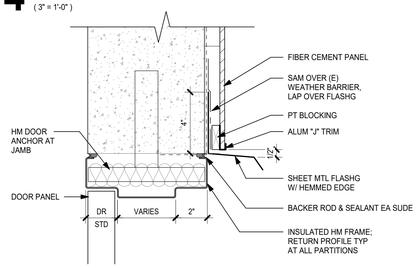

19 EXT HM HEAD/JAMB AT CONC WALL
(3" = 1'-0")

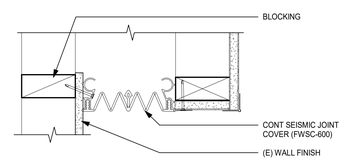

20 SEISMIC JOINT AT INT WALL
(3" = 1'-0")

ZCS
524 Main Street, Suite 2
Oregon City, OR 97045
503.659.2205

Soderstrom Architects
1331 NW Lovejoy Street, Suite 775
Portland, OR 97209
T 503-228-5617
sdra.com

LAUREL ELEMENTRY SCHOOL
1401 LAUREL ST,
JUNCTION CITY, OR 97448

LAUREL ELEMENTARY SCHOOL SEISMIC RETROFIT

REGISTERED ARCHITECT 4758 PORTLAND, OR STATE OF OREGON

△	DESCRIPTION	DATE:

PROJECT NO.
WRK: P-2973-24
SDRA: 24059

DRAWN:	FL
CHECKED:	TH
DATE:	09/19/2025

EXTERIOR DETAILS

A8.22

BID AND PERMIT SET

ONE INCH EQUALS FULL SCALE 9/16/2025 3:07:21 PM Autodesk Docs://P2973 Laurel ES Classrooms & Cafeteria/P2973_ARCH_R23.rvt

Attachment A

PROJECT STRUCTURAL NOTES (Junction City, Lane County, Oregon, 97448)

GENERAL INFORMATION:

1. STRUCTURAL DRAWINGS ARE A PORTION OF THE CONTRACT DOCUMENTS AND ARE INTENDED TO BE USED WITH ARCHITECTURAL, MECHANICAL, AND ELECTRICAL DRAWINGS. THE CONTRACTOR IS RESPONSIBLE FOR COORDINATING THE REQUIREMENTS FROM THESE DRAWINGS INTO THEIR SHOP DRAWINGS AND WORK. THESE GENERAL NOTES SUPPLEMENT THE PROJECT SPECIFICATIONS. REFER TO THE PROJECT SPECIFICATIONS FOR ADDITIONAL REQUIREMENTS. NOTES AND DETAILS ON THE STRUCTURAL DRAWINGS SHALL TAKE PRECEDENCE OVER THE GENERAL NOTES AND TYPICAL DETAILS. WHERE NO DETAILS ARE GIVEN, CONSTRUCTION SHALL BE AS SHOWN FOR SIMILAR WORK.
2. THE STRUCTURE IS DESIGNED TO FUNCTION AS A UNIT UPON COMPLETION. THE CONTRACTOR IS RESPONSIBLE FOR FURNISHING ALL TEMPORARY BRACING AND/OR SUPPORT THAT MAY BE REQUIRED AS THE RESULT OF THE CONTRACTOR'S CONSTRUCTION METHODS AND/OR SEQUENCES.
3. ALL EXISTING CONDITIONS, DIMENSIONS AND ELEVATIONS SHALL BE FIELD VERIFIED. THE CONTRACTOR SHALL NOTIFY THE ARCHITECT OF ANY SIGNIFICANT DISCREPANCIES FROM CONDITIONS SHOWN ON THE DRAWINGS.
4. THE GENERAL CONTRACTOR SHALL BE RESPONSIBLE FOR ALL CONSTRUCTION MEANS AND METHODS. RESPONSIBILITY SHALL INCLUDE BUT NOT LIMITED TO DEMOLITION AND CONSTRUCTION MEANS AND METHODS, TECHNIQUES, SEQUENCING, AND SAFETY REQUIRED TO COMPLETE CONSTRUCTION.
5. UNLESS OTHERWISE NOTED, MATERIAL AND DESIGN SPECIFICATIONS CITED HEREIN SHALL BE THOSE CONFORMING WITH THE VERSION OF THE APPLICABLE SPECIFICATIONS OR CODE MOST RECENTLY ADOPTED BY THE PERMITTING AUTHORITY. THESE STRUCTURAL NOTES ARE TO BE USED AS A SUPPLEMENT TO THE SPECIFICATIONS.
6. THIS STRUCTURE AND ALL OF ITS PARTS MUST BE ADEQUATELY BRACED AGAINST WIND, LATERAL EARTH AND SEISMIC FORCES UNTIL THE PERMANENT LATERAL-FORCE RESISTING SYSTEMS HAVE BEEN CONSTRUCTED AND ALL ATTACHMENTS AND CONNECTIONS NECESSARY FOR THE STABILITY OF THE STRUCTURE AND ITS PARTS HAVE BEEN MADE.
7. ALL FEATURES OF CONSTRUCTION NOT FULLY SHOWN SHALL BE OF THE SAME TYPE AND CHARACTER AS SHOWN FOR SIMILAR CONDITIONS, SUBJECT TO REVIEW BY THE ARCHITECT AND STRUCTURAL ENGINEER OF RECORD.
8. ALL PRODUCTS AND MATERIALS USED BY THE CONTRACTOR SHALL BE APPLIED, PLACED, ERECTED OR INSTALLED IN STRICT ACCORDANCE WITH THE MANUFACTURER'S INSTRUCTIONS.
9. ALL KEYNOTES INDICATE NEW ITEMS TYPICALLY UNLESS NOTED OTHERWISE.

CODE REQUIREMENT:

1. CONFORM TO ASCE 41-17 AND THE 2022 OREGON STRUCTURAL SPECIALTY CODE, BASED ON THE 2021 INTERNATIONAL BUILDING CODE (IBC). NOTE: THIS APPLIES TO ALL REFERENCES TO OSSC.

DESIGN CRITERIA:

1. DESIGN IS BASED ON THE STRENGTH AND DEFLECTION CRITERIA OF THE OSSC. IN ADDITION TO THE DEAD LOADS, THE FOLLOWING LOADING AND ALLOWABLE LOAD IS USED FOR DESIGN:

A. SNOW LOAD:

EXPOSURE FACTOR	1.0
SNOW IMPORTANCE FACTOR	1.2
MINIMUM SNOW LOAD	20 PSF
RAIN ON SNOW SURCHARGE	5.0 PSF
MINIMUM DESIGN SNOW LOAD	29 PSF

B. WIND LOAD:

BASIC WIND SPEED (3-SECOND GUST)	110 MPH
WIND EXPOSURE	B
WIND IMPORTANCE FACTOR	1.0
BUILDING CATEGORY	IV
TOPOGRAPHIC FACTOR	1.00

C. EARTHQUAKE DESIGN DATA:

RISK CATEGORY	IV
BSE-1E	
S_S	0.135g
S_1	0.06g
S_{XS}	0.217g
BSE-2E	
S_S	0.535g
S_1	0.295g
S_{XS}	0.734g
SITE CLASS	D
SEISMIC DESIGN CATEGORY	D
SEISMICITY LEVEL	HIGH
ANALYSIS PROCEDURE	LINEAR STATIC PROCEDURE

D. GEOTECHNICAL DATA

DESIGN BASED ON REPORT BY:	THE GALLI GROUP DATED DECEMBER 10TH, 2024
ULTIMATE SOIL CAPACITY	6,000 PSF

STRUCTURAL OBSERVATION:

THE STRUCTURAL ENGINEER OF RECORD (SEOR) WILL PERFORM STRUCTURAL OBSERVATION BASED ON THE REQUIREMENTS OF THE OSSC AT THE STAGES OF CONSTRUCTION LISTED BELOW. CONTRACTOR SHALL PROVIDE SUFFICIENT ADVANCED NOTICE AND ACCESS FOR THE SER TO PERFORM THESE OBSERVATIONS.

STRUCTURAL OBSERVATION

ITEM	COMMENTS
PRIOR TO FIRST CONCRETE POUR	AFTER REBAR PLACEMENT
DURING INITIAL WOOD FRAMING CONSTRUCTION	--
AS REQUIRED TO ADDRESS STRUCTURAL ISSUES	--

A FIELD REPORT WILL BE SUBMITTED TO THE BUILDING DEPARTMENT FOLLOWING EACH SITE VISIT.

SPECIAL INSPECTIONS AND TESTING:

1. SPECIAL INSPECTION WILL BE PROVIDED BY THE OWNER BASED ON THE REQUIREMENTS OF THE OSSC AS SUMMARIZED IN THE SPECIAL INSPECTION AND TESTING PROGRAM ON SHEET S0.20. CONTRACTOR SHALL PROVIDE SUFFICIENT NOTICE AND ACCESS FOR THE SPECIAL INSPECTOR TO PERFORM THESE INSPECTIONS.

SUBMITTALS:

1. SHOP DRAWINGS SHALL BE SUBMITTED TO THE ARCHITECT PRIOR TO FABRICATION AND CONSTRUCTION REGARDING ALL STRUCTURAL ITEMS, INCLUDING THE FOLLOWING:
   - A. CONCRETE MIX DESIGNS, CONCRETE AND MASONRY REINFORCEMENT (INCLUDING MILL TEST REPORTS), STRUCTURAL STEEL (INCLUDING MILL TEST REPORTS)
   - B. ANY CHANGES TO THE STRUCTURAL DRAWINGS SHALL BE SUBMITTED TO THE ARCHITECT AND ARE SUBJECT TO REVIEW AND ACCEPTANCE OF THE STRUCTURAL ENGINEER OF RECORD.
   - C. DESIGN DRAWINGS, SHOP DRAWINGS, AND CALCULATIONS FOR THE DESIGN AND FABRICATION OF ITEMS THAT ARE DESIGNED BY OTHERS, INCLUDING: GLUE-LAMINATED MEMBERS, FIBER REINFORCED POLYMER (FRP), WINDOW WALL, AND ALL OTHER GLAZING SYSTEMS SHALL BEAR THE SEAL AND SIGNATURE OF A PROFESSIONAL ENGINEER REGISTERED IN THE STATE OF OREGON, AND SHALL BE INCLUDED FOR CONNECTIONS TO THE STRUCTURE, CONSIDERING LOCALIZED EFFECTS ON STRUCTURAL ELEMENTS INDUCED BY THE CONNECTION LOADS. DESIGN SHALL BE BASED ON THE REQUIREMENTS OF THE OSSC WITH THE FOLLOWING:
     - EARTHQUAKE AND WIND LOADS AS NOTED IN DESIGN CRITERIA.
   - D. THE CONTRACTOR SHALL COORDINATE SEISMIC RESTRAINTS OF MECHANICAL, PLUMBING, AND ELECTRICAL EQUIPMENT, MACHINERY, AND ASSOCIATED PIPING WITH THE STRUCTURE. ANY CONNECTIONS TO THE STRUCTURE SHALL CONFORM TO OSSC AND SHALL BE SUBMITTED TO THE ARCHITECT PRIOR TO FABRICATION.

DIVISION 03 - CONCRETE

CONCRETE:

1. CONCRETE WORK SHALL CONFORM TO CHAPTER 19 OF THE OSSC. CONCRETE STRENGTHS SHALL BE VERIFIED BY STANDARD 28 DAY CYLINDER TESTS PER ASTM C39, AND SHALL BE AS FOLLOWS:

ABSOLUTE WATER-CEMENT RATIO BY WEIGHT			
f'c (PSI)	NON AIR-ENTRAINED	AIR-ENTRAINED	USE
4,000	0.50	N/A	INTERIOR SLABS ON GRADE
4,000	0.45	N/A	SPREAD FOOTINGS AND SHEAR WALL FOOTINGS

2. VERIFY WATER/CEMENT RATIO WITH FLOOR COVERING MANUFACTURER FOR CONCRETE FLOORS WITH MOISTURE SENSITIVE FLOOR COVERINGS, AND VERIFY COORDINATE WITH PROJECT SPECIFICATIONS.
3. MINIMUM CEMENT CONTENT PER CUBIC YARD SHALL BE AS FOLLOWS:
   - f'c=4,000 psi: 550 lbs.
4. FLY ASH CONFORMING TO ASTM C618 (INCLUDING TABLE 2A) TYPE F, MAY BE USED TO REPLACE UP TO 20% OF THE CEMENT CONTENT, PROVIDED THAT THE MIX STRENGTH IS SUBSTANTIATED BY TEST DATA.
5. THE CONTRACTOR SHALL SUBMIT CONCRETE MIX DESIGNS, ALONG WITH TEST DATA COMPLIANT WITH OSSC SECTION 1905, A MINIMUM OF TWO WEEKS PRIOR TO PLACING CONCRETE. NO WATER MAY BE ADDED TO CONCRETE IN THE FIELD UNLESS SPECIFICALLY APPROVED IN WRITING BY THE CONCRETE SUPPLIER IN CONJUNCTION WITH THE CONCRETE MIX DESIGN.
6. A WATER-REDUCING ADMIXTURE CONFORMING TO ASTM C494, USED IN STRICT ACCORDANCE WITH THE MANUFACTURER'S RECOMMENDATIONS, SHALL BE INCORPORATED IN CONCRETE DESIGN MIXES. A HIGH-RANGE WATER-REDUCING (HRWR) ADMIXTURE CONFORMING TO ASTM C494, TYPE F OR G, MAY BE USED IN CONCRETE MIXES PROVIDING THAT THE SLUMP DOES NOT EXCEED 8". AN AIR-ENTRAINING AGENT CONFORMING TO ASTM C260 SHALL BE USED IN CONCRETE MIXES FOR EXTERIOR HORIZONTAL SURFACES EXPOSED TO WEATHER. THE AMOUNT OF ENTRAINED AIR SHALL BE 5% +/- 1% BY VOLUME.

CONCRETE CAST IN PLACE:

1. CONCRETE SHALL HAVE A MAXIMUM SLUMP OF 4" WITHOUT THE USE OF ADMIXTURES AS NOTED.
2. A MINIMUM OF THREE (3) CONCRETE TEST CYLINDERS SHALL BE PROVIDED FOR EACH ONE HUNDRED (100) CU. YARDS, OR EACH DAY OF POUR, FOR EACH CONCRETE STRENGTH. CYLINDERS SHALL BE TESTED AS FOLLOWS:
   - A. ONE (1) AT SEVEN (7) DAYS, AND
   - B. TWO (2) AT TWENTY-EIGHT (28) DAYS
3. CONCRETE CYLINDER SAMPLING AND TESTING SHALL CONFORM WITH ASTM SPECIFICATIONS. ACCEPTANCE OF CONCRETE SHALL BE GOVERNED BY THE PROVISIONS OF ACI 318-19 "BUILDING CODE REQUIREMENTS FOR REINFORCED CONCRETE". TWO (2) SETS OF MIX DESIGNS, WITH COMPLETE STATISTICAL BACKUP, SHALL BE SUBMITTED FOR REVIEW.
4. CONCRETE MATERIALS, FORM WORK, MIXING, PLACING AND CURING SHALL CONFORM WITH THE SPECIFICATIONS CONTAINED IN THE ACI "MANUAL OF CONCRETE PRACTICE".
5. AT AREAS OF DEPRESSIONS FOR SLABS AND BEAMS, PROVIDE MINIMUM THICKNESS OF DEPTH AS FOR ADJACENT AREAS, UNLESS NOTED OTHERWISE.
6. CONCRETE SHALL NOT BE PLACED ON FROZEN GROUND.
7. BOND NEW CONCRETE TO EXISTING CONCRETE WITH "WELD-CRETE", AS MANUFACTURED BY LARSON PRODUCTS CORPORATION, OR APPROVED. AS A MINIMUM, EXISTING CONCRETE SURFACES SHALL BE ROUGHENED BY CHIPPING TO A MINIMUM 1/4" AMPLITUDE TO EXPOSE COARSE AGGREGATE. PREPARATION AND APPLICATION IS TO BE IN STRICT ACCORDANCE WITH THE MANUFACTURER'S RECOMMENDATIONS.
8. ALL EXPOSED CORNERS SHALL HAVE 3/4" CHAMFER, UNLESS NOTES OTHERWISE.

CONCRETE REINFORCING STEEL:

1. REINFORCING STEEL SHALL CONFORM TO ASTM A615, GRADE 60, FOR DEFORMED BARS AND ASTM A185 FOR SMOOTH WELDED WIRE FABRIC (WWF), UNLESS OTHERWISE NOTED. REINFORCING STEEL TO BE WELDED SHALL CONFORM TO ASTM A706. REINFORCING STEEL SHALL BE SECURELY TIED IN PLACE WITH #16 ANNEALED IRON WIRE.
2. BARS IN SLABS SHALL BE SUPPORTED ON WELL CURED CONCRETE BLOCKS OR APPROVED METAL CHAIRS, AS SPECIFIED BY THE CRSI MANUAL OF STRANDED PRACTICE, MSP-1. REINFORCING STEEL SHALL BE DETAINED IN ACCORDANCE WITH THE "ACI MANUAL OF STANDARD PRACTICE, MSP-1 REINFORCING STEEL SHALL BE DETAILED IN ACCORDANCE WITH THE "ACI MANUAL OF STANDARD PRACTICE FOR DETAILING REINFORCED CONCRETE STRUCTURES", ACI 315. LAP ALL REINFORCING BARS PER THE TYPICAL LAP SPLICE LENGTH SCHEDULE, EXCEPT AS NOTED. MECHANICAL SPLICES NOTED ON THE PLANS SHALL BE DAYTON BAR-GRIP SPLICES OR APPROVED WITH A CURRENT ICC APPROVAL REPORT.

TYPICAL LAP SPLICE LENGTH SCHEDULE

BAR SIZE	3,000 psi		4,000 psi		5,000 psi		6,000 psi	
	CASE 1	CASE 2	CASE 1	CASE 2	CASE 1	CASE 2	CASE 1	CASE 2
#4	29	43	25	37	22	33	20	31
#5	36	54	31	47	28	42	25	38

NOTES:
- A. DIMENSIONS ARE IN INCHES.
- B. CASES 1 AND 2 ARE DEFINED AS FOLLOWS: (db = BAR DIAMETER)
  - a. BEAMS OR COLUMNS:
    - CASE 1: COVER ≥ db AND c-c SPACING ≥ 2db
    - CASE 2: COVER < db OR c-c SPACING < 2db
  - b. ALL OTHERS:
    - CASE 1: COVER ≥ db AND c-c SPACING ≥ 3db
    - CASE 2: COVER < db OR c-c SPACING < 3db
- C. FOR TOP BARS, MULTIPLY LAP LENGTH ABOVE BY 1.3. TOP BARS ARE HORIZONTAL BARS WITH MORE THAN 12" OF CONCRETE CAST BELOW THE BARS.

3. REINFORCEMENT SHALL BE SECURED IN FORMS WITH TIES AND ANCHORAGE TO PREVENT DISPLACEMENT. ALL TIE WIRE SHALL BE MIN. #16 ANNEALED STEEL.
4. ALL REINFORCING STEEL SHALL BE TIED 100% ALONG ALL PERIMETER EDGES AND 50%FIELD.
5. REINFORCING (MINIMUM UNLESS NOTED OTHERWISE ON PLANS)
   - A. PLACE TWO (2) NO. 4 CONTINUOUS AT BOTTOM, TOP AND AT DISCONTINUOUS ENDS OF ALL FOUNDATIONS.
   - B. PLACE BARS AT CORNERS AND INTERSECTIONS FOR WALLS AND FOUNDATIONS EQUAL IN SIZE AND NUMBER TO HORIZONTAL REINFORCING WITH LEGS THAT SATISFY THE REQUIRED LAP SPLICE LENGTH PER SCHEDULE ABOVE.
   - C. PLACE TWO (2) NO. 4x OPENING DIMENSIONS PLUS 4'-0" EACH SIDE OF ALL OPENINGS AND TWO (2) NO. 4x4'-0" DIAGONAL BARS AT EACH CORNER OF ALL SLAB OPENINGS GREATER THAN 1'-6" IN DIMENSION.
6. ALL WELDED WIRE FABRIC SHALL CONFORM WITH ASTM A 185. ALL WIRE FABRIC SHALL BE SUPPLIED LAID IN FLAT SHEETS AND CHAIRED TO PROPER POSITION IN SLABS. LAP ONE (1) FULL MESH PLUS 2" ON SIDES AND ENDS.
7. ALL REINFORCING STEEL SHALL BE DETAILED, FABRICATED AND PLACED IN ACCORDANCE WITH ACI DETAILING MANUAL 315.
   - A. ALL REINFORCING STEEL SHALL BE ACCURATELY AND SECURELY PLACED.
   - B. REINFORCING SHALL NOT BE BENT OR DISPLACED FOR THE CONVENIENCE OF OTHER TRADES, UNLESS APPROVED BY THE STRUCTURAL ENGINEER.
   - C. SPLAY REINFORCING STEEL AROUND OPENINGS WITH 1" IN 10" SPLAY, UNLESS NOTED OTHERWISE.
   - D. MINIMUM COVER FROM CONCRETE SURFACES TO REINFORCING STEEL SHALL BE:
     - 3" TO BOTTOM OF FOOTING
     - 3/4" SLAB TO TOP AND BOTTOM SURFACES, CENTER OF SLAB ON GRADE
8. REINFORCEMENT BARS SHALL NOT BE TACK WELDED, WELDED, HEATED OR CUT, UNLESS INDICATED ON THE CONTRACT DOCUMENTS OR APPROVED BY THE STRUCTURAL ENGINEER OF RECORD.
9. REINFORCEMENT COUPLERS SHALL BE LENTON, FOX-HOWLETT OR APPROVED, CAPABLE OF DEVELOPING ONE HUNDRED TWENTY-FIVE PERCENT (125%) OF THE SPECIFIED YIELD STRENGTH OF THE REINFORCEMENT.

CONCRETE ACCESSORIES:

1. EPOXY ADHESIVE SHALL BE SIMPSON SET-3G OR APPROVED WITH EQUIVALENT ICC ALLOWABLE TENSION AND SHEAR VALUES. EPOXY ANCHORS SHALL BE INSTALLED IN STRICT CONFORMANCE WITH MANUFACTURER'S RECOMMENDATIONS. DO NOT CUT REINFORCING IN NEW OR EXISTING CONCRETE DURING INSTALLATION.
2. ADHESIVE ANCHORS INSTALLED IN HORIZONTALLY OR UPWARDLY INCLINED ORIENTATIONS TO RESIST SUSTAINED TENSION LOADS SHALL BE DONE BY A CERTIFIED ADHESIVE ANCHOR INSTALLER (AAI) AS CERTIFIED THROUGH ACI/CRSI, OR AN APPROVED ALTERNATE WHEN SUBMITTED AND APPROVED BY THE EOR (ACI 318-19 D.9.2.2)(ACI 318-19 17.8.2.2). PROOF OF CURRENT CERTIFICATION SHALL BE SUBMITTED TO THE ENGINEER FOR APPROVAL PRIOR TO COMMENCEMENT OF INSTALLATION.
3. ADHESIVE ANCHORS MUST BE INSTALLED IN CONCRETE AGED A MINIMUM OF 21 DAYS (ACI 318-19 17.2.2).

NON-SHRINK GROUT:

1. GROUT SHALL BE NON-SHRINKABLE GROUT CONFORMING WITH ASTM C 1107 AND C.R.D. - 621, CORPS OF ENGINEERS "SPECIFICATIONS FOR NON-SHRINK GROUT". GROUT SHALL HAVE A SPECIFIED COMPRESSIVE STRENGTH AT TWENTY-EIGHT (28) DAYS OF 5000 psi. PRE-GROUTING OF BASE PLATES WILL NOT BE PERMITTED.

DIVISION 05 - METALS

STRUCTURAL STEEL AND MISCELLANEOUS IRON:

STRUCTURAL STEEL SHALL BE:

STRUCTURAL STEEL	
ASTM A992, GRADE 50	WIDE FLANGE SHAPES
ASTM A36	CHANNELS, PLATES, AND ANGLES, U.N.O.

1. DESIGN, FABRICATION, AND ERECTION SHALL BE IN ACCORDANCE WITH THE "AISC SPECIFICATION FOR THE DESIGN, FABRICATION, AND ERECTION OF STRUCTURAL STEEL FOR BUILDINGS" WITH "COMMENTARY" AND THE "CODE OF STANDARD PRACTICE", WITH EXCEPTIONS NOTED IN SPECIFICATIONS.
2. DRAWINGS ARE DIMENSIONED FOR LAYOUT AND NOT DIMENSIONED PER AISC STANDARDS. IT IS THE RESPONSIBILITY OF THE GENERAL CONTRACTOR TO COORDINATE BETWEEN ALL DRAWINGS AND DEVELOP SHOP DRAWINGS WITH DETAIL AND DIMENSIONING PER AISC.
3. ALL FABRICATION, ERECTION, IDENTIFICATION, AND PAINTING SHALL CONFORM TO AISC SPECIFICATIONS.
4. ALL STEEL EXPOSED TO WEATHER, SOIL, MOISTURE, OR AS DENOTED ON PLANS SHALL BE HOT DIP GALVANIZED PER ASTM A-123, OR OTHER APPROVED PROTECTIVE COATING.
5. ALL WELDING SHALL CONFORM TO AWS (LATES EDITION) SPECIFICATIONS.
   - A. ALL WELDERS TO BE QUALIFIED UNDER AWS SPECIFICATIONS WITHIN THE PAST TWO YEARS FOR THE TYPE OF WELDING PERFORMED.
   - B. ALL WELDS SHALL BE PERFORMED USING PRE-QUALIFIED WELDING PROCEDURES.
   - C. WELDS FILLER METAL SHALL BE AWS A5.1 OR A5.5 E70XX ELECTRODES OR AWS A5.18 ER70S-X OR A5.2 E7X7-X.
   - D. AFTER FABRICATION, BUT BEFORE INSTALLATION, REMOVE RUST, SCALE, GREASE, AND OIL BY WIRE BRUSHING AND CHEMICAL TREATMENT.
   - E. WELDING OF REINFORCING STEEL SHALL BE AS SPECIFIED IN THESE STRUCTURAL NOTES UNDER **"CONCRETE REINFORCING STEEL"**.
6. ALL MEMBERS SHALL BE CONNECTED WITH SEMI-FINISHED MACHINE BOLTS, UNLESS NOTED OTHERWISE ON PLANS. MACHINE BOLTS SHALL CONFORM TO ASTM A 307, GRADE A.
7. ANCHOR BOLT SHALL CONFORM WITH ASTM A 307, GRADE A, AND SHALL BE PROVIDED WITH STANDARD WASHERS AND NUTS. GALVANIZE EXTERIOR BOLTS. GALVANIZING SHALL BE IN ACCORDANCE WITH ASTM A 153, CLASS C. NUTS SHALL BE OVER-TAPPED TO CLASS 2A FIT BEFORE GALVANIZING, IN ACCORDANCE WITH ASTM A 563.
8. BOLT HEADS OR NUTS BEARING ON SLOPING FLANGES SHALL BE EQUIPPED WITH BEVELED WASHERS.
9. ERECTION AIDS (SUCH AS BOLTS, CLIPS, SHIMS, SEATS OR ANY OTHERS REQUIRED TO FACILITATE CONSTRUCTION) ARE THE RESPONSIBILITY OF THE CONTRACTOR TO DESIGN AND PROVIDE.
10. ALL BRACING SHALL HAVE TWO (2) BOLT CONNECTIONS, UNLESS NOTED OTHERWISE. ALL CROSS BRACING SHALL BE BOLTED AT INTERSECTIONS WITH TWO (2) BOLT MINIMUM FOR ST AND ONE (1) BOLT FOR ANGLES. PROVIDE FILLER PLATE BETWEEN CROSS BRACES, AS REQUIRED.

DIVISION 06 - WOOD, PLASTICS AND COMPOSITES

FRAMING LUMBER:

1. ALL FRAMING LUMBER SHALL BE DOUGLAS FIR-LARCH AND SHALL BE GRADED UNDER THE MOST RECENTLY ADOPTED RULES OF THE WEST COAST LUMBER INSPECTION BUREAU (WCLIB).
2. ALL BEAMS AND JOISTS SHALL BE NO. 2 MINIMUM, UNLESS INDICATED OTHERWISE ON THE PLANS.
3. ALL STUDS AND BLOCKING SHALL BE NO. 2.
4. ALL LUMBER IN CONTACT WITH CONCRETE OR EXPOSED SHALL BE PRESSURE TREATED IN ACCORDANCE WITH AWPA STANDARD C-2 AND SHALL BEAR THE AWPA QUALITY MARK.
5. ALL GLULAM BEAMS TO BE 24F-V4 TYPICAL. 24F-V8 FOR CANTILEVERED OR CONTINUOUS SPAN.
6. ALL LVL LUMBER TO BE MICROLAM LVL OR APPROVED EQUAL.

PLYWOOD SHEATHING:

1. ALL PLYWOOD SHALL BE C-D GRADE WITH EXTERIOR GLUE MANUFACTURED IN ACCORDANCE WITH THE UNITED STATES PRODUCT STANDARDS PS 1-83/ANSI A199.1 "FOR CONSTRUCTION AND INDUSTRIAL PLYWOOD" AND SHALL CONFORM TO OSSC SECTION 2303 AND SHALL BEAR THE APA TRADEMARK OF THE APA.
2. PLYWOOD SHALL BE LAID WITH END JOINTS STAGGERED.
3. BLOCK ALL SHEAR WALL SHEATHING WITH 2x BLOCKING AT ALL EDGES.
4. OSB MAY BE SUBSTITUTED FOR PLYWOOD WITH SAME SPAN RATING.

NAILING AND FASTENERS:

1. NAILING INDICATED ON PLANS AND DETAILS ARE "COMMON" NAILS. MINIMUM FRAMING NAILING SHALL CONFORM TO OSSC TABLE 2304.10.2. SEE DETAILS FOR ADDITIONAL TYPICAL NAILING REQUIREMENTS. SUBSTITUTION OF NAILS OTHER THAN "COMMON" IS NOT PERMITTED WITHOUT PRIOR APPROVAL.
2. POWER DRIVEN NAILS OTHER THAN "COMMON" NAILS MAY BE USED IF DATA IS SUBMITTED AND APPROVED PRIOR TO USE.
3. ALL BOLTED CONNECTIONS SHALL BE MADE WITH MACHINE BOLTS (M.B.) CONFORMING TO ASTM A307. ALL BOLTS AND LAGS SHALL BE INSTALLED WITH STANDARD WASHERS, UNLESS NOTED.
4. JOIST HANGERS, HOLDOWNS AND OTHER FRAMING ACCESSORIES ARE REFERRED TO ON PLANS BY PARTICULAR TYPE AS MANUFACTURED BY SIMPSON COMPANY, SAN LEANDRO, CA. ALL HARDWARE IS TO BE FASTENED PER MANUFACTURER'S SPECIFICATIONS, U.N.O.
5. ALL PLATES AND LEDGERS SHALL BE ANCHORED WITH A MINIMUM OF THREE FASTENERS PER PIECE.
6. EPOXY ANCHOR BOLTS AND ADHESIVE INDICATED ON DRAWINGS MAY BE SUBSTITUTED UPON CONTRACTORS REQUEST WITH E.O.R. APPROVED EQUAL. DEPTH OF EMBEDMENT SHALL BE AS PER MANUFACTURER SPECIFICATIONS, UNLESS NOTED OTHERWISE. INSTALL ALL EPOXY FASTENERS IN STRICT ACCORDANCE WITH THE MANUFACTURER'S REQUIREMENTS.

SURE-BOARD PANELS:

1. SURE-BOARD SERIES 200/200W/200S PANELS SHALL BE INSTALLED PER THE DRAWINGS AND MANUFACTURER'S SPECIFICATIONS, COMPLYING WITH APPLICABLE CODES (AISI, IBC, IRC, ASCE 7, CBC, AND LOCAL JURISDICTIONS).
2. PANELS SERVE AS SHEAR WALL SHEATHING COMPONENTS FOR WOOD FRAMING AND MUST BE FASTENED PER THE MANUFACTURER'S EVALUATION REPORTS (ER-0126, ER-0185) AND AS INDICATED IN THESE DRAWINGS.
3. PANELS SHALL BE STORED DRY AND INSTALLED PER APPROVED SUBMITTALS, WITH FASTENERS PER ASTM STANDARDS AS INDICATED.

ZCS
524 Main Street, Suite 2
Oregon City, OR 97045
503.659.2205

LAUREL ELEMENTRY SCHOOL
1401 LAUREL ST,
JUNCTION CITY, OR 97448

LAUREL ELEMENTARY SCHOOL SEISMIC RETROFIT

△	DESCRIPTION	DATE:

PROJECT NO.	P-2973-24
DRAWN:	SJL
CHECKED:	EJT
DATE:	09-19-2025

STRUCTURAL GENERAL NOTES

S0.10

BID AND PERMIT SET

ONE INCH EQUALS FULL SCALE 9/17/2025 2:46:22 PM Autodesk Docs://P2973 Laurel ES Classrooms & Cafeteria/P2973_STRUCT_R23.rvt

Attachment A

GENERAL - SPECIAL INSPECTIONS

SYSTEM OR MATERIAL	OSSC CODE REFERENCE	CODE OR STANDARD REFERENCE	FREQUENCY (NOTE 6)		REMARKS
			CONTINUOUS	PERIODIC	
FABRICATORS	1705.11 1704.2.5				SPECIAL INSPECTION IS REQUIRED FOR STRUCTURAL LOAD-BEARING MEMBERS AND ASSEMBLIES FABRICATED ON THE PREMISES OF A FABRICATOR'S SHOP. SPECIAL INSPECTIONS SHALL BE PERFORMED DURING FABRICATION. PERFORMING SPECIAL INSPECTIONS IS NOT REQUIRED, WHERE FABRICATOR HAS BEEN APPROVED AS AN APPROVED FABRICATOR, PER SECTION 1704.2.5.1.
SUBMITTALS TO THE BUILDING OFFICIAL	1704.5			X	CERTIFICATES OF COMPLIANCE, REPORTS OF PRE-CONSTRUCTION TESTS, OR REPORTS OF MATERIAL PROPERTIES SHALL BE SUBMITTED TO THE BUILDING OFFICIAL.
POST INSTALLED MECHANICAL ANCHORS AND ADHESIVE ANCHORS (EXCLUDING CONDITIONS NOTED ABOVE) IN HARDENED CONCRETE	1705.3	ACI 318: 17.2.5		X	

SOILS/GEOTECHNICAL - SPECIAL INSPECTIONS

SYSTEM OR MATERIAL	OSSC CODE REFERENCE	CODE OR STANDARD REFERENCE	FREQUENCY (NOTE 6)		REMARKS
			CONTINUOUS	PERIODIC	
SOILS					
VERIFY MATERIALS BELOW SHALLOW FOUNDATIONS ARE ADEQUATE TO ACHIEVE THE DESIGN BEARING CAPACITY	1705.6	GEOTECHNICAL REPORT		X	BY THE GEOTECHNICAL ENGINEER OR QUALIFIED SPECIAL INSPECTOR
VERIFY EXCAVATIONS ARE EXTENDED TO PROPER DEPTH AND HAVE REACHED PROPER MATERIAL				X	
PERFORM CLASSIFICATION AND TESTING OF COMPACTED FILL MATERIALS				X	
DURING FILL PLACEMENT, VERIFY USE OF PROPER MATERIALS AND PROCEDURES IN ACCORDANCE WITH THE PROVISIONS OF THE APPROVED GEOTECHNICAL REPORT. VERIFY DENSITIES AND LIFT THICKNESSES DURING PLACEMENT AND COMPACTION OF COMPACTED FILL.			X		
PRIOR TO PLACEMENT OF COMPACTED FILL, INSPECT SUBGRADE AND VERIFY THAT SITE HAS BEEN PREPARED PROPERLY				X	

SOILS/GEOTECHNICAL - TESTING

SYSTEM OR MATERIAL	OSSC CODE REFERENCE	CODE OR STANDARD REFERENCE	FREQUENCY (NOTE 6)		REMARKS
			CONTINUOUS	PERIODIC	
FILL IN-PLACE DENSITY OR PREPARED SUBGRADE DENSITY	1705.6	VARIES; GEOTECHNICAL REPORT OR MINIMUM PER OSSC 1803.5.5, 1803.5.8, WHICHEVER IS GREATER		X	BY THE GEOTECHNICAL ENGINEER OR QUALIFIED SPECIAL INSPECTOR
MATERIAL VERIFICATION		VARIES; CLASSIFICATION AND TESTING OF CONTROLLED FILL MATERIALS		X	BY THE GEOTECHNICAL ENGINEER OR QUALIFIED SPECIAL INSPECTOR
TEST ELEMENTS	1705.6 1705.7		REFERENCE SPECIFICATIONS FOR PERFORMANCE VERIFICATION AND PROOF LOAD TESTING REQUIREMENTS		BY THE GEOTECHNICAL ENGINEER

CONCRETE - SPECIAL INSPECTIONS

SYSTEM OR MATERIAL	OSSC CODE REFERENCE	CODE OR STANDARD REFERENCE	FREQUENCY (NOTE 6)		REMARKS
			CONTINUOUS	PERIODIC	
GENERAL	1705.3 1901.6	ACI 318: 26.13			SPECIAL INSPECTIONS OF CONCRETE SHALL CONFORM TO THE REQUIREMENTS OF SECTION 1705.3 OF THE IBC AND SECTION 26.13 OF ACI 318.
REINFORCING STEEL AND (POST TENSIONED/PRETENSIONED) TENDON PLACEMENT	1901.5	ACI 318: CH. 20, 25.2, 25.3, 26.6.1-26.6.3		X	REINFORCING TO COMPLY WITH ALL CODE PROTECTION, SPACING AND TOLERANCE LIMITS.
INSPECT ANCHORS/BOLTS CAST IN CONCRETE	1705.3	ACI 318: 17.2.5 26.13		X	ALL CAST-IN-PLACE ANCHORS/BOLTS SHALL BE VISUALLY INSPECTED. REFERENCE STEEL INSPECTIONS FOR ADDITIONAL INSTALLATION, MATERIAL AND WELDING INSPECTIONS OF STEEL ITEMS EMBEDDED IN CONCRETE (HEADED STUDS, DBA's, ETC.)
VERIFYING USE OF REQUIRED MIX DESIGN(S)	1904.1 1904.2 1908	ACI 318: CH. 19, 26.4.3, 26.4.4		X	
CONCRETE SPECIMENS FOR TESTING		ASTM C172 ASTM C31 ACI 318: 26.5, 26.12	X		PRIOR TO CONCRETE PLACEMENT, FABRICATE CONCRETE SPECIMENS FOR TESTING. SEE THE CONCRETE TESTING TABLE FOR ADDITIONAL INFORMATION.
VERIFICATION OF FORMWORK		ACI 318: 26.11.1.2(b), 26.13.3.3		X	SPECIAL INSPECTIONS APPLY TO SHAPE, LOCATION AND DIMENSIONS OF THE CONCRETE MEMBER BEING FORMED
EMBEDDED ITEMS IN CONCRETE				X	ALL NON-STRUCTURAL EMBEDDED ITEMS, SUCH AS CONDUITS, PIPES AND SLEEVES, SHALL BE REVIEWED FOR CONFORMANCE WITH STRUCTURAL DOCUMENTS FOR SIZE, SPACING, LOCATION, EDGE DISTANCE AND TRIM REINFORCING.
REINFORCING STEEL MECHANICAL COUPLERS, TERMINATORS AND FORMSAVERS		ICC EVALUATION REPORTS		X	

CONCRETE - TESTING

SYSTEM OR MATERIAL	OSSC CODE REFERENCE	CODE OR STANDARD REFERENCE	FREQUENCY (NOTE 6)	REMARKS
CONCRETE STRENGTH	1705.3 ASTM C172 ASTM C 31 ACI 318 26.12, ACI 318 26.5	ASTM C39	EACH 150 CY NOR LESS THAN EACH 5000 SF OF SLAB OR WALL PLACED EACH SHIFT	FABRICATE SPECIMENS AT TIME FRESH CONCRETE IS PLACED
CONCRETE SLUMP		ASTM C143		
CONCRETE AIR CONTENT		ASTM C231		
CONCRETE TEMPERATURE		ASTM C1064		

STEEL - SPECIAL INSPECTIONS

SYSTEM OR MATERIAL	OSSC CODE REFERENCE	CODE OR STANDARD REFERENCE	INSPECTION (NOTES 5 AND 6)		REMARKS
			CONTINUOUS/ PERFORM	PERIODIC/ OBSERVE	
CONTRACTOR QUALITY CONTROL REQUIREMENTS		AISC 360 CHAPTER N		X	CONTRACTOR TO PROVIDE QUALITY CONTROL FOR ALL ITEMS INDICATED TO BE OBSERVED AND/OR PERFORMED IN TABLE BELOW
STEEL FABRICATION					
FABRICATION OF STRUCTURAL ELEMENTS	1704.2.5	AISC 360		X	REFER TO INSPECTION OF FABRICATOR REQUIREMENTS
MATERIAL VERIFICATION OF STRUCTURAL STEEL COMPONENTS	1705.2.1 TABLE 1705.2-3	ASTM A6 ASTM STANDARDS SPECIFIED IN CONSTRUCTION DOCUMENTS AISC 360 A3.1 AISC 360 N2.1		X	CERTIFIED MILL TEST REPORTS
MATERIAL VERIFICATION OF HIGH STRENGTH BOLTS, NUTS, AND WASHERS	1705.2.1.2 AISC 360 M2.5 TABLE 1705.2-3	AISC 360 A3.3 AISC 360 N3.2 ASTM STANDARDS SPECIFIED IN CONSTRUCTION DOCUMENTS RCSC 2.1		X	MANUFACTURER'S CERTIFIED TEST REPORTS
MATERIAL VERIFICATION OF ANCHOR BOLTS AND THREADED RODS		AISC 360 A3.4 AISC 360 N3.2 ASTM STANDARDS SPECIFIED IN CONSTRUCTION DOCUMENTS		X	MANUFACTURER'S CERTIFIED TEST REPORTS
MATERIAL VERIFICATION OF WELD FILLER METALS	1705.2.1.1 TABLE 1705.2-5	AISC 360 A3.5 AISC 360 N3.2 APPLICABLE AWS A5 DOCUMENTS		X	MANUFACTURER'S CERTIFIED TEST REPORTS
STRUCTURAL STEEL WELDING					
VERIFYING USE OF PROPER WPS'S	1705.2.1 AWS D1.1	AISC 360 N3.2		X	RETAIN A RECORD OF WELDING PROCEDURE SPECIFICATIONS
VERIFYING WELDER QUALIFICATIONS	1705.2	AWS D1.1		X	RETAIN A RECORD OF QUALIFICATION CARDS
SINGLE PASS FILLET WELDS LESS THAN OR EQUAL TO 5/16"	1705.2.1 AWS D1.1	AWS D1.1 CLAUSE 6		X	
INSPECTION TASKS PRIOR TO BOLTING					
PROPER FASTENERS SELECTED FOR THE JOINT DETAIL (GRADE, TYPE, BOLT LENGTH, IF THREADS ARE TO BE EXCLUDED FROM THE SHEAR PLANE)	1705.2.1.2 TABLE 1705.2-2	AISC 360 TABLE N5.6-1 AISC 360 M2.5		X	
CONNECTING ELEMENTS< INCLUDING THE APPROPRIATE FAYING SURFACE CONDITION AND HOLE PREPARATION, IF SPECIFIED, MEET APPLICABLE REQUIREMENTS				X	

WOOD - SPECIAL INSPECTIONS

SYSTEM OR MATERIAL	OSSC CODE REFERENCE	CODE OR STANDARD REFERENCE	FREQUENCY (NOTE 6)		REMARKS
			CONTINUOUS	PERIODIC	
WOOD - REQUIRED STRUCTURAL SPECIAL INSPECTIONS					
FABRICATION OF PREFABRICATED STRUCTURAL ELEMENTS	1705.5			X	REFER TO INSPECTION OF FABRICATOR REQUIREMENTS
WOOD - REQUIRED SEISMIC RESISTANCE INSPECTIONS					
CONNECTIONS FOR DIAPHRAGM CHORDS, COLLECTORS, BRACING, AND SHEAR WALL ANCHORAGE AND HOLDOWNS	1705.13.2.2			X	ALL FASTENERS/CONNECTIONS VISUALLY INSPECTED
FASTENING OF SHEAR WALL SHEATHING WITH EDGE NAILING ≤ 4"	1705.13.2			X	FOR WOOD SHEAR WALLS, SHEAR PANELS, AND DIAPHRAGMS. THIS INCLUDES NAILING, BOLTING, ANCHORING AND OTHER FASTENING TO OTHER COMPONENTS IN THE SEISMIC FORCE RESISTING SYSTEM
WOOD - REQUIRED WIND RESISTANCE INSPECTIONS					
NAILING, BOLTING, ANCHORING, AND OTHER FASTENING OF COMPONENTS WITHIN THE MAIN WIND-FORCE RESISTING SYSTEM, INCLUDING WOOD SHEAR WALLS, WOOD DIAPHRAGMS, COLLECTORS, BRACES, AND HOLDOWNS	1705.12.1			X	SPECIAL INSPECTIONS ARE NOT REQUIRED FOR WOOD SHEAR WALLS, SHEAR PANELS AND DIAPHRAGMS WHERE THE LATERAL RESISTANCE IS PROVIDED BY STRUCTURAL SHEATHING AND FASTENER SPACING IS MORE THAN 4 INCHES ON CENTER. REFER TO TABLE 2 FOR MATERIAL SPECIFIC REQUIREMENTS

REQUIRED SPECIAL INSPECTIONS for SEISMIC RESISTANCE

SYSTEM OR MATERIAL	OSSC CODE REFERENCE	CODE OR STANDARD REFERENCE	FREQUENCY (NOTE 6)		REMARKS
			CONTINUOUS	PERIODIC	
ARCHITECTURAL COMPONENTS					
INSTALLATION OF OTHER SEISMIC SUPPORTS FOR ARCHITECTURAL SYSTEMS AND THEIR COMPONENTS	1705.13.5			X	
PLUMBING MECHANICAL COMPONENTS					
INSTALLATION OF OTHER SEISMIC SUPPORTS FOR MECHANICAL SYSTEMS AND THEIR COMPONENTS	1705.13.6			X	
DESIGNATED SEISMIC SYSTEM VERIFICATION					
DESIGNATED SEISMIC SYSTEM VERIFICATION	1705.13.4			X	VERIFY THAT THE LABEL, ANCHORAGE OR MOUNTING CONFORMS TO THE CERTIFICATE OF COMPLIANCE. DESIGNATED SEISMIC SYSTEMS SHALL BE QUALIFIED IN ACCORDANCE WITH ASCE 7-16 13.2.2
SEISMIC ISOLATION SYSTEMS					
SEISMIC ISOLATION SYSTEMS IN SEISMICALLY ISOLATED STRUCTURES	1705.13.8			X	REQUIRED DURING FABRICATION AND INSTALLATION OF ISOLATOR UNITS AND ENERGY DISSIPATING DEVICES

REQUIRED TESTING for SEISMIC RESISTANCE

SYSTEM OR MATERIAL	OSSC CODE REFERENCE	CODE OR STANDARD REFERENCE	FREQUENCY (NOTE 6)		REMARKS
			CONTINUOUS	PERIODIC	
SEISMICALLY ISOLATED STRUCTURES					
SEISMIC ISOLATION SYSTEMS TESTS	1705.14.4	ASCE 7 - 17.8		X	

STATEMENT OF SPECIAL INSPECTION NOTES:

1. INSPECTIONS SHALL CONFORM TO SECTION 1705 OF THE 2022 OSSC, CONTRACT DOCUMENTS AND APPROVED SUBMITTALS. REFER TO SPECIAL INSPECTION AND TESTING TABLES FOR PROJECT REQUIREMENTS.

2. SPECIAL INSPECTIONS AND ASSOCIATED TESTING SHALL BE PERFORMED BY AN APPROVED ACCREDITED INDEPENDENT AGENCY MEETING THE REQUIREMENTS OF ASTM E329 (MATERIALS). THE INSPECTION AND TESTING AGENCY SHALL FURNISH TO THE STRUCTURAL ENGINEER ARCHITECT A COPY OF THEIR SCOPE OF ACCREDITATION. SPECIAL INSPECTORS SHALL BE APPROVED BY THE BUILDING OFFICIAL. WELDING INSPECTORS SHALL BE QUALIFIED PER SECTION 6.1.4.1(1) OF AWS D1.1.

3. THE SPECIAL INSPECTOR SHALL OBSERVE THE INDICATED WORK FOR COMPLIANCE WITH THE APPROVED CONSTRUCTION DOCUMENTS. ALL DISCREPANCIES SHALL BE BROUGHT TO THE ATTENTION OF THE CONTRACTOR FOR CORRECTION AND NOTED IN THE INSPECTION REPORTS.

4. THE SPECIAL INSPECTOR AND GEOTECHNICAL ENGINEER SHALL FURNISH INSPECTION REPORTS FOR EACH INSPECTION TO THE BUILDING OFFICIAL, STRUCTURAL ENGINEER, ARCHITECT, CONTRACTOR, AND OWNER. THE SPECIAL INSPECTION AGENCY SHALL SUBMIT A FINAL REPORT STATING THAT THE WORK REQUIRING SPECIAL INSPECTION WAS INSPECTED AND IS IN CONFORMANCE WITH THE APPROVED CONSTRUCTION DOCUMENTS AND THAT ALL DISCREPANCIES NOTED IN THE INSPECTION REPORTS HAVE BEEN CORRECTED.

5. QUALITY ASSURANCE (QA) IS REQUIRED FOR STRUCTURAL STEEL ITEMS PER AISC 360 AND 341 UNLESS SPECIFICALLY NOTED OTHERWISE. QUALITY CONTROL (QC) TO BE PROVIDED BY THE FABRICATOR, ERECTOR OR OTHER RESPONSIBLE CONTRACTOR AS APPLICABLE. CONTRACTOR AND SPECIAL INSPECTOR TO DOCUMENT QUALITY CONTROL AS REQUIRED IN AISC 360 SECTION N3 AND AISC 341 SECTION J2.

6. **INSPECTION TYPES:**
   - CONTINUOUS : THE FULL-TIME OBSERVATION OF WORK REQUIRING SPECIAL INSPECTION BY AN APPROVED SPECIAL INSPECTOR WHO IS PRESENT IN THE AREA WHERE THE WORK IS BEING PERFORMED.
   - PERIODIC : THE PART-TIME OR INTERMITTENT OBSERVATION OF WORK REQUIRING SPECIAL INSPECTION BY AN APPROVED SPECIAL INSPECTOR WHO IS PRESENT IN THE AREA WHERE THE WORK HAS BEEN OR IS BEING PERFORMED AND AT THE COMPLETION OF THE WORK.
   - OBSERVE : OBSERVE THESE FUNCTIONS ON A RANDOM, DAILY BASIS. OPERATIONS NEED NOT BE DELAYED PENDING OBSERVATIONS.
   - PERFORM : INSPECTIONS SHALL BE PERFORMED PRIOR TO THE FINAL ACCEPTANCE OF THE ITEM.

7. PERFORM INSPECTION PRIOR TO FINAL ACCEPTANCE OF THE ITEM FOR TEN WELDS TO BE MADE BY A GIVEN WELDER, WITH THE WELDER DEMONSTRATING UNDERSTANDING OF REQUIREMENTS AND POSSESSION OF SKILLS AND TOOLS TO VERIFY THESE ITEMS, THE PERFORM DESIGNATION OF THIS TASK SHALL BE REDUCED TO OBSERVE, AND THE WELDER SHALL PERFORM THIS TASK. SHOULD THE INSPECTOR DETERMINE THAT THE WELDER HAS DISCONTINUED PERFORMANCE OF THIS TASK, THE TASK SHALL BE RETURNED TO PERFORM UNTIL SUCH TIME AS THE INSPECTOR HAS RE-ESTABLISHED ADEQUATE ASSURANCE THAT THE WELDER WILL PERFORM THE INSPECTION TASKS LISTED.

8. SPECIAL INSPECTION OF MECHANICAL POST INSTALLED ANCHORS SHALL BE IN STRICT CONFORMANCE WITH THE ICC REPORT AND MANUFACTURER'S INSTALLATION REQUIREMENTS. ANCHOR INSTALLERS SHALL BE QUALIFIED AS REQUIRED BY JURISDICTION REQUIREMENTS.
   - INSPECTION REPORTS SHALL IDENTIFY NAMES OF INSTALLERS.
   - SPECIAL INSPECTOR SHALL PROVIDE DOCUMENTATION AT THE END OF ANCHOR INSTALLATIONS STATING THAT THE ANCHORS WERE INSPECTED PER APPROVED ANCHOR EVALUATION REPORT.

9. TESTING ABBREVIATIONS:
   A. NDT - NON-DESTRUCTIVE TESTING
   B. C.J.P. - COMPLETE JOINT PENETRATION
   C. MT - MAGNETIC PARTICLE TESTING
   D. RBS - REDUCED BEAM SECTION

10. DOCUMENT (D): INDICATES CONTRACTOR AND SPECIAL INSPECTOR TO PROVIDE DOCUMENTATION IN ACCORDANCE WITH AISC 341.

CONTRACTOR RESPONSIBILITY:

EACH CONTRACTOR RESPONSIBLE FOR THE CONSTRUCTION OF THE MAIN WIND-OR SEISMIC-FORCE-RESISTING SYSTEM, DESIGNATED SEISMIC SYSTEM OR A WIND-OR SEISMIC-RESISTING COMPONENT LISTED THE TABLES SHALL SUBMIT A WRITTEN STATEMENT OF RESPONSIBILITY TO THE BUILDING OFFICIAL AND THE OWNER PRIOR TO THE COMMENCEMENT OF WORK ON THE SYSTEM OR COMPONENT. THE CONTRACTOR'S STATEMENT OF RESPONSIBILITY SHALL CONTAIN THE FOLLOWING:

ACKNOWLEDGEMENT OF AWARENESS OF THE SPECIAL REQUIREMENTS CONTAINED IN THE STATEMENT OF SPECIAL INSPECTIONS.

1. ACKNOWLEDGEMENT THAT CONTROL WILL BE EXERCISED TO OBTAIN CONFORMANCE WITH THE CONSTRUCTION DOCUMENTS APPROVED BY THE BUILDING OFFICIAL.

2. PROCEDURES FOR EXERCISING CONTROL WITHIN THE CONTRACTOR'S ORGANIZATION, THE METHOD AND FREQUENCY OF REPORTING AND DISTRIBUTION OF THE REPORTS.

3. IDENTIFICATION AND QUALIFICATIONS OF THE PERSON(S) EXERCISING SUCH CONTROL AND THEIR POSITION(S) IN THE ORGANIZATION.

ZCS
524 Main Street, Suite 2
Oregon City, OR 97045
503.659.2205

LAUREL ELEMENTRY SCHOOL
1401 LAUREL ST,
JUNCTION CITY, OR 97448

LAUREL ELEMENTARY SCHOOL SEISMIC RETROFIT

EXPIRES: 06-30-26

△	DESCRIPTION	DATE:

PROJECT NO.	P-2973-24
DRAWN:	SJL
CHECKED:	EJT
DATE:	09-19-2025

SPECIAL INSPECTIONS AND TESTING

S0.20

BID AND PERMIT SET

ONE INCH EQUALS FULL SCALE 9/17/2025 2:46:22 PM Autodesk Docs://P2973 Laurel ES Classrooms & Cafeteria/P2973_STRUCT_R23.rvt

Attachment A

FOUNDATION SCHEDULE				
MARK	WIDTH	LENGTH	DEPTH	REINFORCEMENT
F-1	1' - 6"	CONT.	MATCH (E)	(2) #5 CONT. BAR
F-2	1' - 0"	CONT.	2' - 0"	(2) #5 CONT. BAR
F-3	2' - 0"	CONT.	1' - 6"	(3) #5 CONT. w/ #4 TRANS. @ 12" o.c. TOP AND BOTTOM
F-4	3' - 0"	CONT.	2' - 0"	(4) #5 CONT. w/ #4 TRANS. @ 12" o.c. TOP AND BOTTOM
F-5	3' - 0"	CONT.	1' - 0"	(3) #5 EACH WAY
F-6	5' - 0"	CONT.	2' - 0"	(6) #5 CONT. w/ #4 TRANS. @ 12" o.c. TOP AND BOTTOM
F-7	1' - 6" DIA.	-	4' - 0"	#5 TIES @ 6" o.c. w/ (6) #5 VERT. BARS

1. UNLESS NOTED OTHERWISE, REINFORCEMENT TO BE SPACED EVENLY IN FOOTING WITH CORRECT SIDE AND BOTTOM CLEARANCES.
2. ALL SHEAR WALL FOOTINGS TO MATCH LENGTH OF SHEAR WALL ABOVE U.N.O.
3. STRUCTURAL FILL TO BE 18" DEEP 3/4" MINUS COMPACTED ROCK PER GEOTECHNICAL REPORT BELOW ALL FOOTINGS.

SHEAR WALL SCHEDULE										
X	SHEATHING	NAIL SIZE (LENGTH, SHANK DIA., HEAD DIA.)	EDGE NAILING (o.c.)	FIELD NAILING (o.c.)	PANEL EDGE STUDS	TOP OF WALL A35 (o.c.)	TOP OF WALL LTP4 (o.c.)	BOTTOM PLATE DIMENSION	SILL PLATE ANCHORAGE (o.c.)	REMARKS
A	15/32" APA RATED	3"x0.148"x0.312"	6"	12"	(E) 2x	2' - 0"	2' - 0"	(E) 2x	5/8" DIA. TITEN HD w/ 5 1/2" MIN. EMBEDMENT @ 1'-6"	
B	15/32" APA RATED	3"x0.148"x0.312"	4"	12"	2x	1' - 0"	1' - 0"	(E) 2x	3/4" DIA. THREADED ROD w/ 8" MIN. EMBEDMENT w/ SIMPSON SET-3G @ 1'-6"	
C	5/8" SURE-BOARD 200W	#8x2" SCREW	2"	12"	2x	1' - 0"	1' - 0"	(E) 2x	5/8" DIA. THREADED ROD w/ 4" MIN EMBEDMENT @ 3'-0"	
D	5/8" SURE-BOARD 200W	#8x2" SCREW	2"	12"	2x	1' - 0"	1' - 0"	(E) 2x	5/8" DIA. THREADED ROD w/ 4" MIN EMBEDMENT w/ SIMPSON SET-3G @ 3'-0"	
E	5/8" SURE-BOARD 200W	#8x2" SCREW	2"	12"	2x	1' - 0"	1' - 0"	(E) 2x	3/4" DIA. THREADED ROD w/ 8" MIN. EMBEDMENT w/ SIMPSON SET-3G @ 2'-0"	

1. ALL PLYWOOD TO BE APA RATED STRUCTURAL 1 SHEATHING U.N.O.
2. ALL NAILS TO BE COMMON OR GALVANIZED BOX TYPE.
3. ATTACH RIM JOIST AND / OR BLOCKING TO SHEAR WALL AS INDICATED IN TABLE ABOVE.
4. ALL WALL SHEATHING TO EXTEND FULL HEIGHT OF WALL, TOP PLATE TO BOTTOM PLATE.
5. ALL SHEAR WALLS AND HOLDOWNS MUST HAVE CONTINUOUS LOAD PATH TO FOUNDATION.
6. USE WASHER PL1/4x3x0"-3" TYPICAL AT ALL ANCHOR BOLTS.
7. WHERE TOP PLATE FASTENING IS LESS THAN 12" o.c., USE MINIMUM BLOCKING OF 2 1/2" MANUFACTURED LUMBER (MICROLLAM LVL, OR PARALLAM PSL).
8. ALL SHEAR WALLS TO BE FULLY BLOCKED U.N.O. BLOCKING TO MATCH REQUIREMENTS FOR PANEL EDGE STUDS.
9. FOR SHEAR WALLS w/ STUDS SPACED @ 24" o.c. MAX. INSTALL SHEATHING WITH LONG DIMENSION ACROSS STUDS.

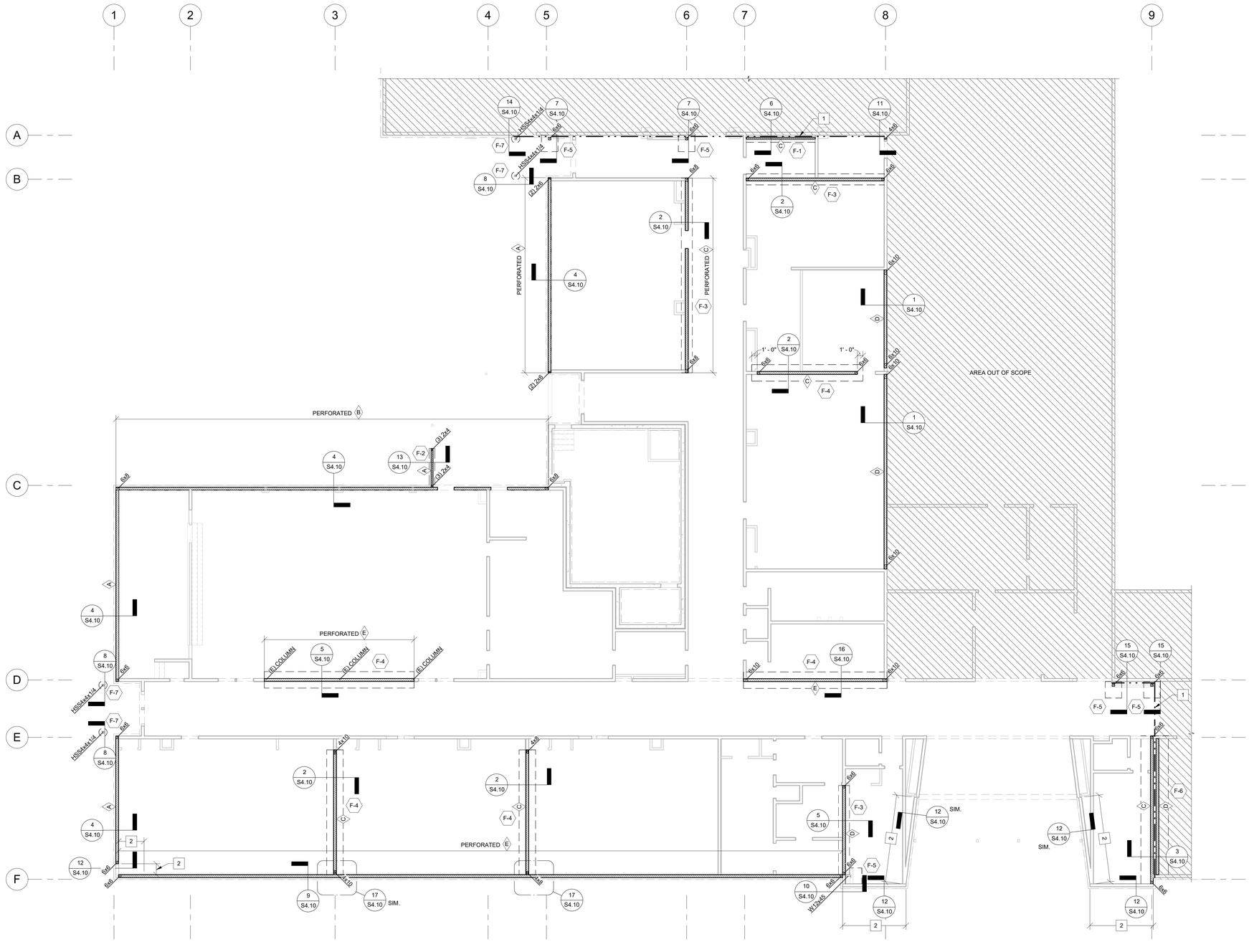

1 S1.10 FOUNDATION PLAN
1/8" = 1'-0"

FOUNDATION AND FRAMING PLAN NOTES

A. DIMENSIONS SHOWN ARE FOR REFERENCE ONLY, CONFIRM w/ ARCHITECTURAL PLAN AND DETAILS.

B. BOTTOM OF EXTERIOR FOOTINGS TO BE PLACED BELOW FROST DEPTH OR AS NOTED IN THE GEOTECHNICAL REPORT, WHICHEVER IS GREATER.

C. ALL FOOTINGS ARE TO BE CENTERED UNDER COLUMNS U.N.O.

D. ALL FOOTINGS TO BEAR OVER GRADE OVER FIRM, UNDISTURBED, NON-ORGANIC, NON-EXPANSIVE NATIVE MATERIAL, OR STRUCTURAL FILL AS REQUIRED PER GEOTECHNICAL REPORT.

E. SEE SHEET S0.10 AND S0.20 FOR ADDITIONAL NOTES AND SCHEDULES.

F. ALL KEYNOTES INDICATE NEW ITEMS TYPICALLY UNLESS NOTED OTHERWISE.

G. INDICATES FLOOR STEP. SEE ARCHITECTURAL PLANS FOR ADDITIONAL INFORMATION.

H. INDICATES (E) CONCRETE WALL ABOVE FOUNDATION.

I. INDICATES (E) WOOD FRAMED WALL ABOVE FOUNDATION.

J. X INDICATES SHEAR WALL TYPE. SEE SHEAR WALL SCHEDULE FOR ADDITIONAL INFORMATION.

K. INDICATES SHEAR WALL LOCATION ABOVE FOUNDATION. SEE SHEAR WALL SCHEDULE FOR ADDITIONAL INFORMATION.

L. INDICATES 2x4 MIN. WALL @ 16" o.c. w/ SINGLE P.T. BOTTOM PLATE AND DOUBLE TOP PLATE.

M. ALL SHEAR WALLS INDICATED AS "PERFORATED" THE CONTRACTOR SHALL PROVIDE NAILING PATTERN AROUND ALL WALL PENETRATIONS AS CALLED OUT ON FRAMING PLANS IN CORRESPONDENCE WITH THE SHEAR WALL SCHEDULE.

N. F-XX INDICATES FOOTING TYPE PER FOUNDATION SCHEDULE.

FOUNDATION PLAN KEYNOTES

1. 6" MIN. SEISMIC SEPARATION GAP. PROVIDE FLEXIBLE COUPLINGS AT ALL PIPING AND DUCTING.
2. ATTACH (E) BRICK TO (E) STUD WALL w/ 8mm PROSOCO ANCHORS w/ 3" EMBEDMENT @ 16" o.c. FULL HEIGHT OF STUD EACH STUD.

ZCS
524 Main Street, Suite 2
Oregon City, OR 97045
503.659.2205

LAUREL ELEMENTRY SCHOOL
1401 LAUREL ST,
JUNCTION CITY, OR 97448

LAUREL ELEMENTARY SCHOOL SEISMIC RETROFIT

STRUCTURAL REGISTERED PROFESSIONAL ENGINEER 70882 OREGON MATTHEW R. SMITH 09-19-2025
EXPIRES: 06-30-26

△	DESCRIPTION	DATE:

PROJECT NO.	P-2973-24
DRAWN:	SJL
CHECKED:	EJT
DATE:	09-19-2025

FOUNDATION PLAN

S1.10

BID AND PERMIT SET

ONE INCH EQUALS FULL SCALE 9/17/2025 2:46:24 PM Autodesk Docs://P2973 Laurel ES Classrooms & Cafeteria/P2973_STRUCT_R23.rvt

Attachment A

SHEAR WALL SCHEDULE

X	SHEATHING	NAIL SIZE (LENGTH, SHANK DIA., HEAD DIA.)	EDGE NAILING (o.c.)	FIELD NAILING (o.c.)	PANEL EDGE STUDS	TOP OF WALL A35 (o.c.)	TOP OF WALL LTP4 (o.c.)	BOTTOM PLATE DIMENSION	SILL PLATE ANCHORAGE (o.c.)	REMARKS
A	15/32" APA RATED	3"x0.148"x0.312"	6"	12"	(E) 2x	2' - 0"	2' - 0"	(E) 2x	5/8" DIA. TITEN HD w/ 5 1/2" MIN. EMBEDMENT @ 1'-6"	
B	15/32" APA RATED	3"x0.148"x0.312"	4"	12"	2x	1' - 0"	1' - 0"	(E) 2x	3/4" DIA. THREADED ROD w/ 8" MIN. EMBEDMENT w/ SIMPSON SET-3G @ 1'-6"	
C	5/8" SURE-BOARD 200W	#8x2" SCREW	2"	12"	2x	1' - 0"	1' - 0"	(E) 2x	5/8" DIA. THREADED ROD w/ 4" MIN EMBEDMENT @ 3'-0"	
D	5/8" SURE-BOARD 200W	#8x2" SCREW	2"	12"	2x	1' - 0"	1' - 0"	(E) 2x	5/8" DIA. THREADED ROD w/ 4" MIN EMBEDMENT w/ SIMPSON SET-3G @ 3'-0"	
E	5/8" SURE-BOARD 200W	#8x2" SCREW	2"	12"	2x	1' - 0"	1' - 0"	(E) 2x	3/4" DIA. THREADED ROD w/ 8" MIN. EMBEDMENT w/ SIMPSON SET-3G @ 2'-0"	

1. ALL PLYWOOD TO BE APA RATED STRUCTURAL 1 SHEATHING U.N.O.
2. ALL NAILS TO BE COMMON OR GALVANIZED BOX TYPE.
3. ATTACH RIM JOIST AND / OR BLOCKING TO SHEAR WALL AS INDICATED IN TABLE ABOVE.
4. ALL WALL SHEATHING TO EXTEND FULL HEIGHT OF WALL, TOP PLATE TO BOTTOM PLATE.
5. ALL SHEAR WALLS AND HOLDOWNS MUST HAVE CONTINUOUS LOAD PATH TO FOUNDATION.
6. USE WASHER PL1/4x3x0'-3" TYPICAL AT ALL ANCHOR BOLTS.
7. WHERE TOP PLATE FASTENING IS LESS THAN 12" o.c., USE MINIMUM BLOCKING OF 2 1/2" MANUFACTURED LUMBER (MICROLLAM LVL, OR PARALLAM PSL).
8. ALL SHEAR WALLS TO BE FULLY BLOCKED U.N.O. BLOCKING TO MATCH REQUIREMENTS FOR PANEL EDGE STUDS.
9. FOR SHEAR WALLS w/ STUDS SPACED @ 24" o.c. MAX. INSTALL SHEATHING WITH LONG DIMENSION ACROSS STUDS.

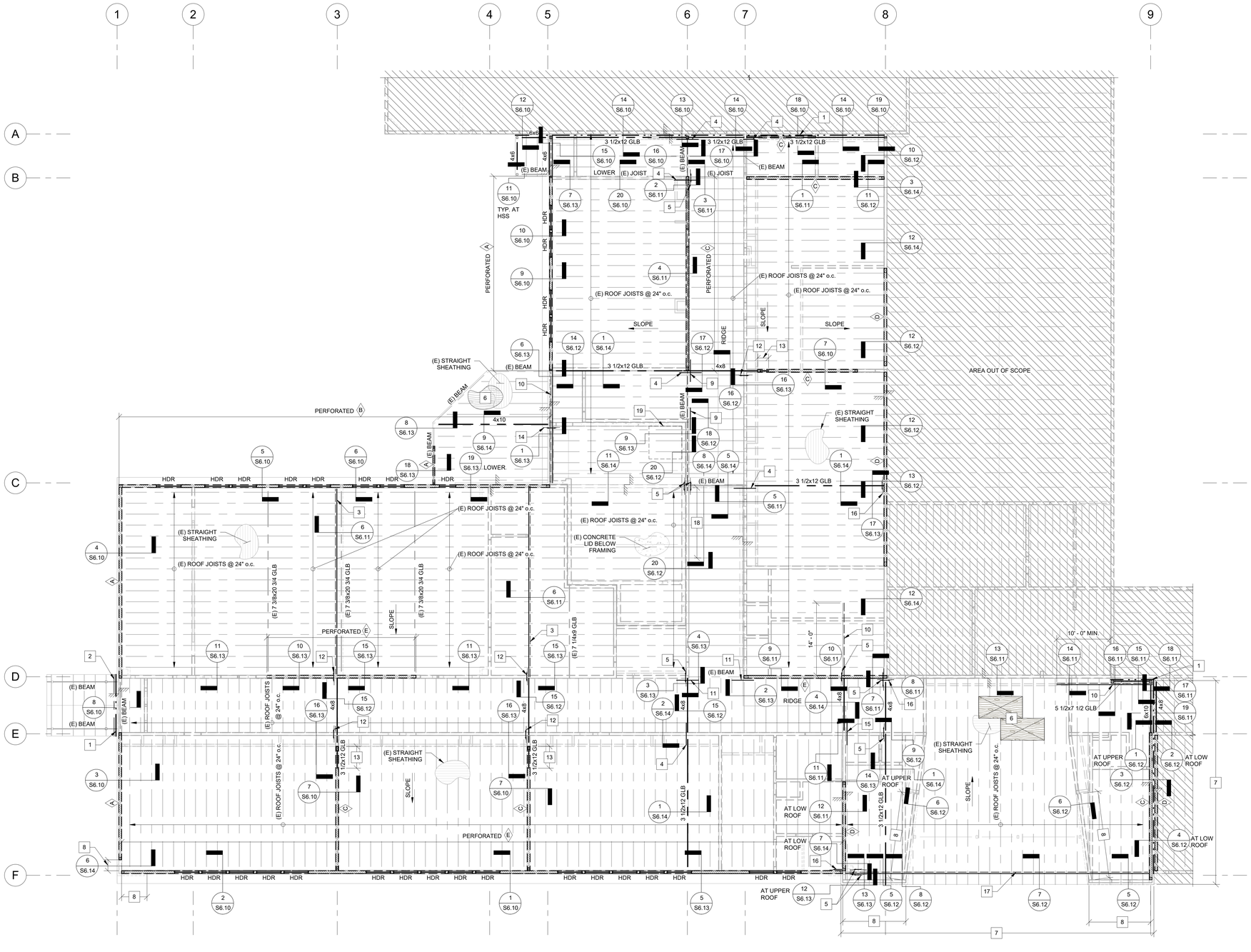

1 S2.10 ROOF FRAMING PLAN
1/8" = 1'-0"

ROOF FRAMING PLAN NOTES

A. DIMENSIONS SHOWN ARE FOR REFERENCE ONLY. CONFIRM w/ ARCHITECTURAL PLAN AND DETAILS.

B. SEE SHEETS S0.10 AND S0.20 FOR ADDITIONAL NOTES AND SCHEDULES.

C. ALL KEYNOTES INDICATE NEW ITEMS TYPICALLY UNLESS NOTED OTHERWISE.

D. INDICATES ROOF STEP. TYP. SEE ARCHITECTURAL PLANS FOR ADDITIONAL INFORMATION.

E. BEAMS ARE CENTERED ON COLUMNS, WALLS, AND/OR GRID LINES, U.N.O.

F. INDICATES (E) CONCRETE WALL BELOW FRAMING.

G. INDICATES (E) WOOD FRAMED WALL BELOW FRAMING.

H. X INDICATES SHEAR WALL TYPE. SEE SHEAR WALL SCHEDULE FOR ADDITIONAL INFORMATION.

I. INDICATES SHEAR WALL LOCATION BELOW FRAMING . SEE SHEAR WALL SCHEDULE FOR ADDITIONAL INFORMATION.

J. INDICATES 2x4 MIN. WALL @ 16" o.c. w/ SINGLE P.T. BOTTOM PLATE AND DOUBLE TOP PLATE BELOW FRAMING.

K. ALL SHEAR WALLS INDICATED AS "PERFORATED" THE CONTRACTOR SHALL PROVIDE NAILING PATTERN AROUND ALL WALL PENETRATIONS AS CALLED OUT ON FRAMING PLANS IN CORRESPONDENCE WITH THE SHEAR WALL SCHEDULE.

L. HDR TYPICAL EXTERIOR HEADER IS 5 1/2x6 GLB USE 1 KING STUD AND 1 TRIMMER UNLESS NOTED OTHERWISE. SEE DETAIL 10/S6.14 FOR ADDITIONAL INFORMATION.

ROOF FRAMING PLAN KEYNOTES

1. 6" MIN. SEISMIC SEPARATION GAP. PROVIDE FLEXIBLE COUPLINGS AT ALL PIPING AND DUCTING.
2. REMOVE (E) ATTACHMENTS AT (E) TRUSS. ADJUST AND REINSTALL (E) TRUSS FOR SEISMIC JOINT PER DETAIL 8/S6.10.
3. 4x FULL HEIGHT BLOCKING w/ SIMPSON CMST12 STRAP w/ 2 1/2"x0.148"ø NAILS EVERY HOLE FIRST BAY AND EVERY OTHER AFTER w/ 39" MIN. END LENGTH.
4. SIMPSON CMSTC16 STRAP w/ 2 1/2"x0.148"ø NAILS EVERY HOLE. PROVIDE 20" MIN. END LENGTH.
5. BACK-TO-BACK SIMPSON HTT4 HOLDOWN w/ SD SCREWS w/ 5/8"ø THREADED ROD.
6. 3/8" APA RATED PLYWOOD SHEATHING ATTACHED DIRECTLY OVER OF (E) SHEATHING w/ 3"x0.148"ø NAILS @ 6" o.c. PANEL EDGES AND 12" o.c. FIELD.
7. EXTENT OF PLYWOOD ROOF SHEATHING.
8. ATTACH (E) BRICK TO (E) STUD WALL w/ 8mm PROSOCO ANCHORS w/ 3" EMBEDMENT @ 16" o.c. FULL HEIGHT OF STUD EACH STUD.
9. STRAP PL3/8x3x2'-0" w/ (18) 3"x0.148"ø NAILS EACH END
10. 2x BLOCKING w/ SIMPSON CS14 STRAP w/ 2 1/2"x0.148"ø NAILS EVERY HOLE FIRST BAY AND EVERY OTHER AFTER. PROVIDE 15" MIN. END LENGTH.
11. SIMPSON CMST12 STRAP w/ 2 1/2"x0.148"ø NAILS EVERY HOLE. PROVIDE 39" MIN. END LENGTH.
12. SIMPSON HDU4 HOLDOWN w/ 5/8"ø THREADED ROD.
13. EXTEND BEAM ABOVE SHEAR WALL 4'-0" MIN. PROVIDE SDWS221000 SCREWS @ 4" o.c. FROM TOP PLATE TO BEAM.
14. SIMPSON LTTP2 HOLDOWN w/ SD SCREWS AT BEAM AND SIMPSON HD3B HOLDOWN AT CONCRETE WALL w/ (2) 5/8"ø TITEN HD w/ 4" EMBEDMENT w/ 5/8"ø THREADED ROD.
15. SIMPSON CS14 STRAP w/ 2 1/2"x0.148"ø NAILS EVERY HOLE w/ 15" MIN. END LENGTH.
16. SIMPSON HDU8 HOLDOWN w/ 7/8"ø THREADED ROD.
17. 4x8 FLATWISE BLOCKING w/ (2) CMST14 STRAPS w/ 2 1/2"x0.148"ø NAILS EVERY HOLE AT END LENGTH AND EVERY OTHER HOLE AFTER w/ 39" END LENGTH
18. 1/2" PLYWOOD ATTIC WALL SHEATHING w/ 3"x0.148"ø NAILS @ 6" o.c. AT PANEL EDGES AND 12" o.c. FIELD PER DETAIL 8/S6.14.
19. HIDDEN LINE INDICATES (E) CHIMNEY TO BE DEMOLISHED DOWN TO TOP OF (E) CONCRETE LID.

ZCS
524 Main Street, Suite 2
Oregon City, OR 97045
503.659.2205

LAUREL ELEMENTARY SCHOOL
1401 LAUREL ST,
JUNCTION CITY, OR 97448

LAUREL ELEMENTARY SCHOOL SEISMIC RETROFIT

STRUCTURAL REGISTERED PROFESSIONAL ENGINEER 70897 MATTHEW R. SMITH
09-30-2025
EXPIRES: 06-30-26

△	DESCRIPTION	DATE:

PROJECT NO.	P-2973-24
DRAWN:	SJL
CHECKED:	EJT
DATE:	09-19-2025

ROOF FRAMING PLAN

S2.10

BID AND PERMIT SET

ONE INCH EQUALS FULL SCALE 9/17/2025 2:46:25 PM Autodesk Docs://P2973 Laurel ES Classrooms & Cafeteria/P2973_STRUCT_R23.rvt

Attachment A

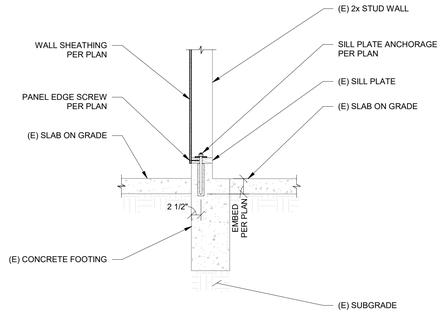

1 S4.10 INTERIOR SHEAR WALL AT (E) FOOTING
3/4" = 1'-0"

NOTE:
PROVIDE TEMPORARY SHORING AS REQUIRED FOR FOOTING INSTALLATION.

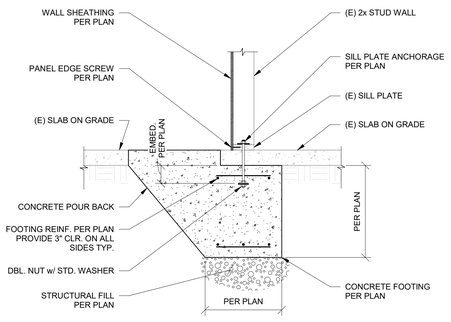

2 S4.10 INTERIOR SHEAR WALL AT FOOTING
3/4" = 1'-0"

NOTE:
PROVIDE TEMPORARY SHORING AS REQUIRED FOR FOOTING INSTALLATION.

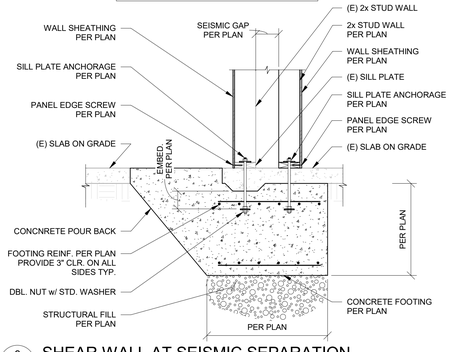

3 S4.10 SHEAR WALL AT SEISMIC SEPARATION
3/4" = 1'-0"

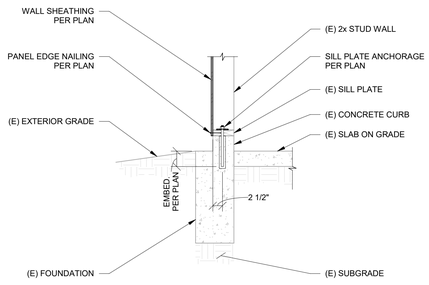

4 S4.10 EXTERIOR SHEAR WALL AT (E) FOOTING
3/4" = 1'-0"

NOTE:
PROVIDE TEMPORARY SHORING AS REQUIRED FOR FOOTING INSTALLATION.

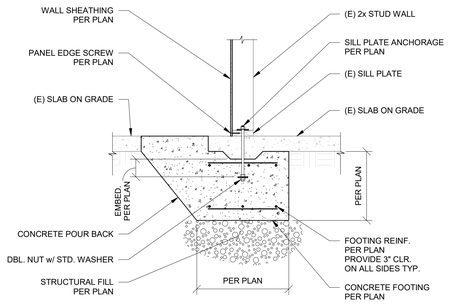

5 S4.10 INTERIOR SHEAR WALL AT FOOTING
3/4" = 1'-0"

NOTE:
PROVIDE TEMPORARY SHORING AS REQUIRED FOR FOOTING INSTALLATION.

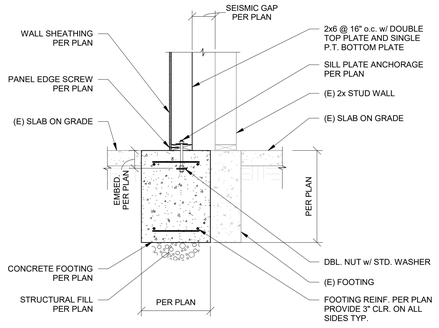

6 S4.10 SHEAR WALL AT SEISMIC SEPARATION
3/4" = 1'-0"

NOTE:
PROVIDE TEMPORARY SHORING AS REQUIRED FOR FOOTING INSTALLATION.

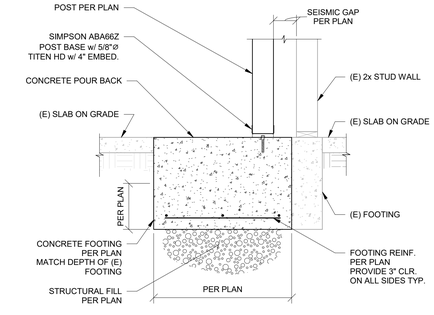

7 S4.10 INTERIOR SPREAD FOOTING
3/4" = 1'-0"

NOTE:
PROVIDE TEMPORARY SHORING AS REQUIRED FOR FOOTING INSTALLATION.

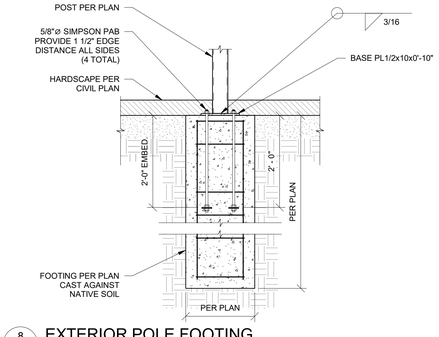

8 S4.10 EXTERIOR POLE FOOTING
3/4" = 1'-0"

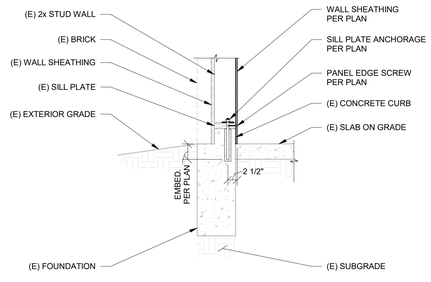

9 S4.10 EXTERIOR SHEAR WALL AT (E) FOOTING GRID F
3/4" = 1'-0"

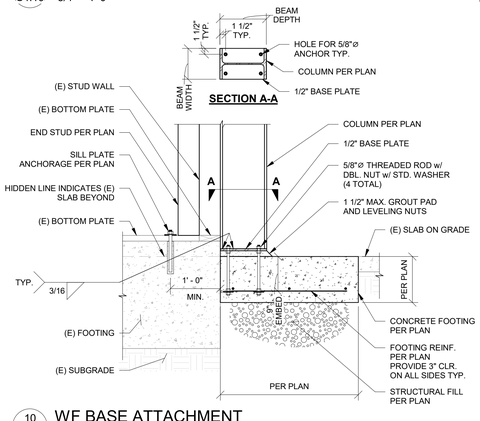

10 S4.10 WF BASE ATTACHMENT
3/4" = 1'-0"

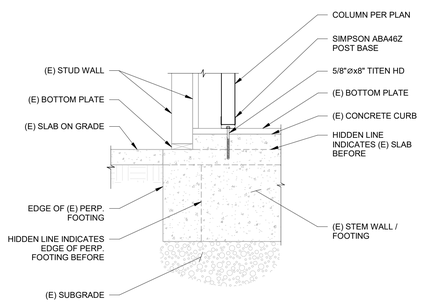

11 S4.10 COLUMN BASE ATTACHMENT TO (E) STEM WALL
3/4" = 1'-0"

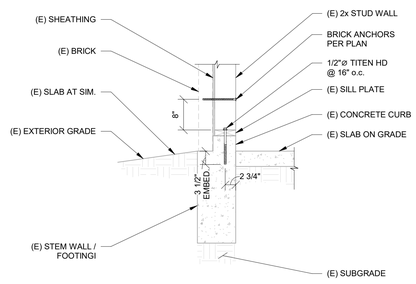

12 S4.10 BRICK ANCHORAGE TO (E) STUD WALL
3/4" = 1'-0"

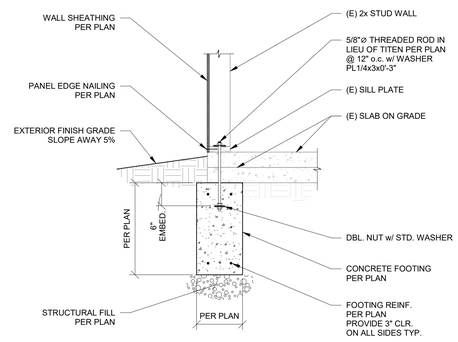

13 S4.10 CANOPY SHEAR WALL FOOTING
3/4" = 1'-0"

NOTE:
PROVIDE TEMPORARY SHORING AS REQUIRED FOR FOOTING INSTALLATION.

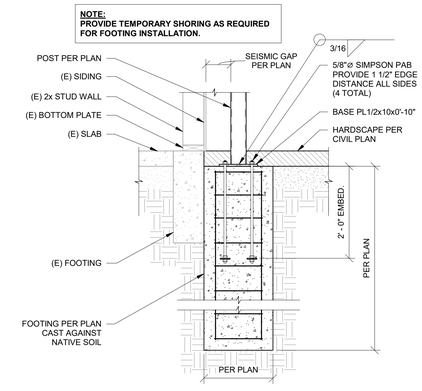

14 S4.10 EXTERIOR POLE FOOTING AT SEISMIC GAP
3/4" = 1'-0"

NOTE:
PROVIDE TEMPORARY SHORING AS REQUIRED FOR FOOTING INSTALLATION.

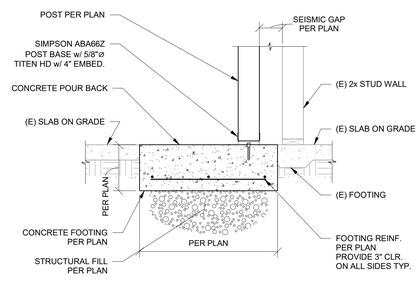

15 S4.10 INTERIOR SPREAD FOOTING
3/4" = 1'-0"

NOTE:
PROVIDE TEMPORARY SHORING AS REQUIRED FOR FOOTING INSTALLATION.

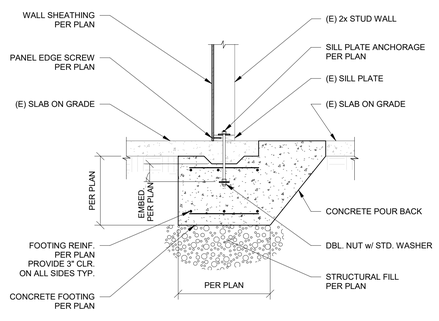

16 S4.10 INTERIOR SHEAR WALL AT FOOTING
3/4" = 1'-0"

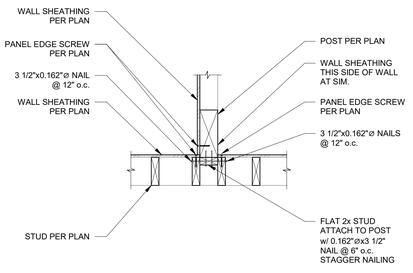

17 S4.10 SHEAR WALL INTERSECTION
1" = 1'-0"

ZCS
524 Main Street, Suite 2
Oregon City, OR 97045
503.659.2205

LAUREL ELEMENTRY SCHOOL
1401 LAUREL ST,
JUNCTION CITY, OR 97448

LAUREL ELEMENTARY SCHOOL SEISMIC RETROFIT

	DESCRIPTION	DATE:

PROJECT NO.	P-2973-24
DRAWN:	SJL
CHECKED:	EJT
DATE:	09-19-2025

FOUNDATION DETAILS

S4.10

BID AND PERMIT SET

Autodesk Docs://P2973 Laurel ES Classrooms & Cafeteria/P2973_STRUCT_R23.rvt 9/17/2025 2:46:26 PM

ONE INCH EQUALS FULL SCALE

Attachment A

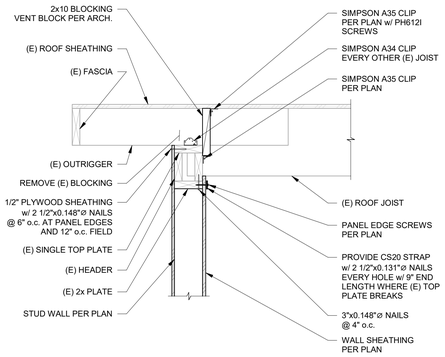

1 S6.10 SHEAR WALL GRID F FULL HEIGHT
1" = 1'-0"

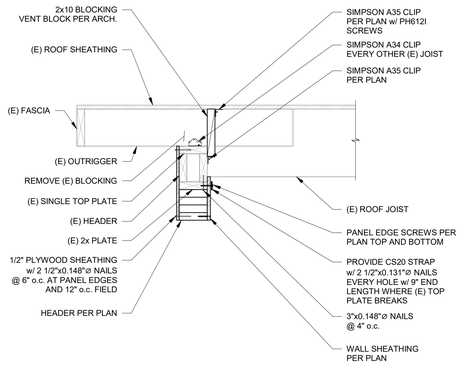

2 S6.10 SHEAR WALL GRID F AT HEADER
1" = 1'-0"

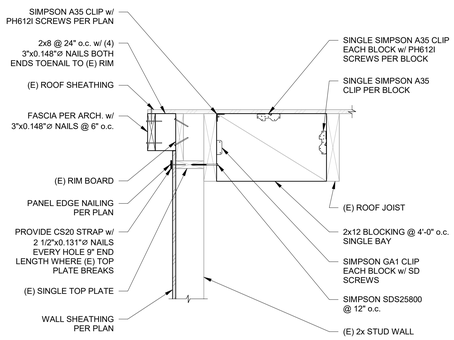

3 S6.10 SHEAR WALL GRID 1 AT PARALLEL JOIST
1" = 1'-0"

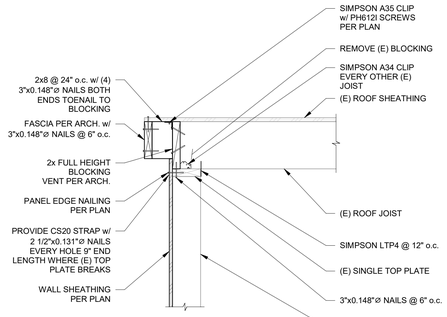

4 S6.10 SHEAR WALL GRID 1 AT PERP. JOIST
1" = 1'-0"

NOTE:
PROVIDE TEMPORARY SHORING AS REQUIRED FOR HEADER INSTALLATION.

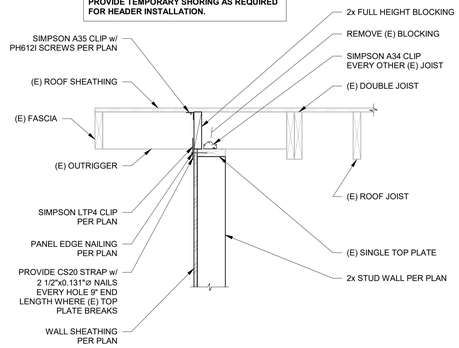

5 S6.10 SHEAR WALL GRID C FULL HEIGHT
1" = 1'-0"

NOTE:
PROVIDE TEMPORARY SHORING AS REQUIRED FOR HEADER INSTALLATION.

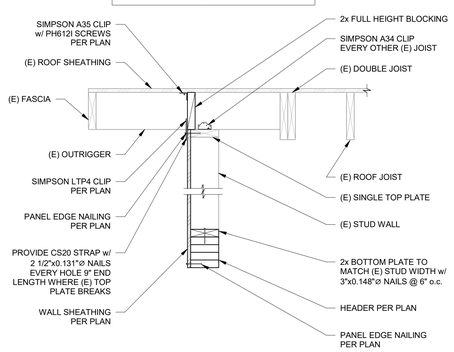

6 S6.10 SHEAR WALL GRID C AT HEADER
1" = 1'-0"

NOTE:
PROVIDE TEMPORARY SHORING AS REQUIRED FOR FOOTING INSTALLATION.

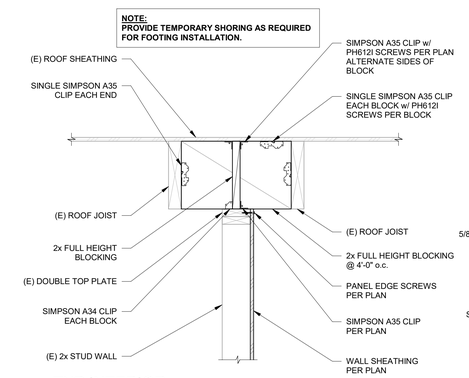

7 S6.10 TYP INTERIOR SHEAR WALL AT PARALLEL ROOF JOIST
1" = 1'-0"

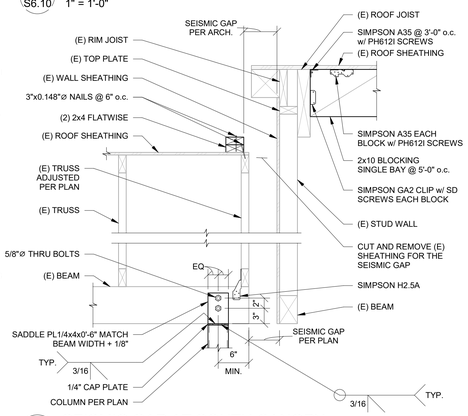

8 S6.10 SEISMIC GAP AT SOUTH CANOPY
1" = 1'-0"

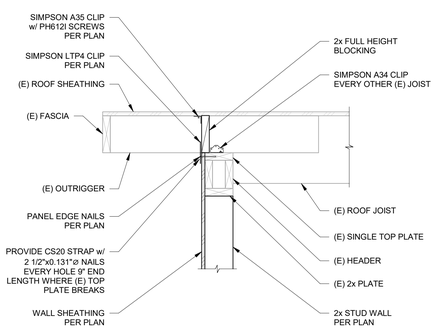

9 S6.10 SHEAR WALL GRID 5 FULL HEIGHT
1" = 1'-0"

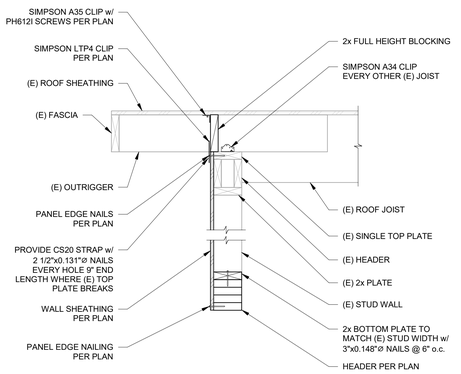

10 S6.10 SHEAR WALL GRID 5 AT HEADER
1" = 1'-0"

NOTE:
PROVIDE TEMPORARY SHORING AS REQUIRED FOR FOOTING INSTALLATION.

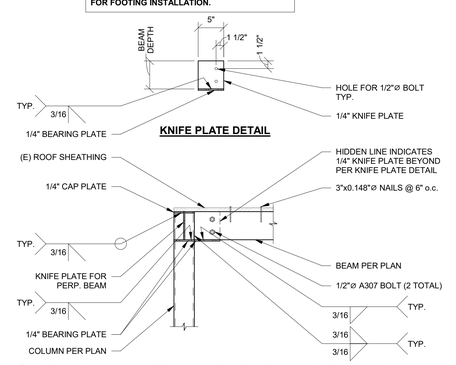

11 S6.10 TYP. BEAM ATTACHMENT TO HSS COLUMN
1" = 1'-0"

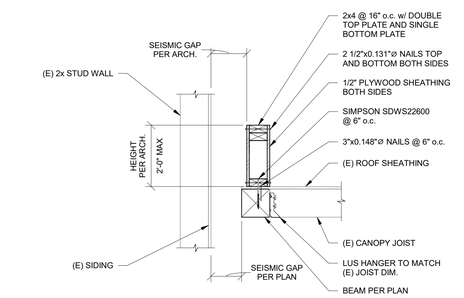

12 S6.10 SEISMIC GAP AT CANOPY
1" = 1'-0"

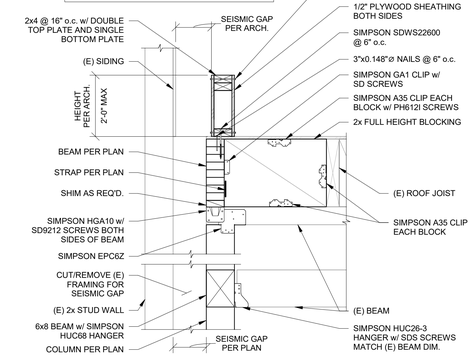

13 S6.10 SEISMIC GAP AT GRID A BEAM SUPPORT
1" = 1'-0"

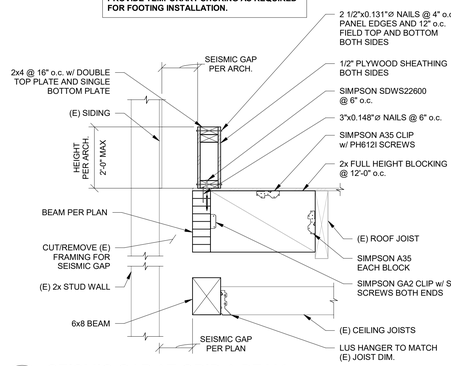

14 S6.10 SEISMIC GAP AT GRID A BEAM
1" = 1'-0"

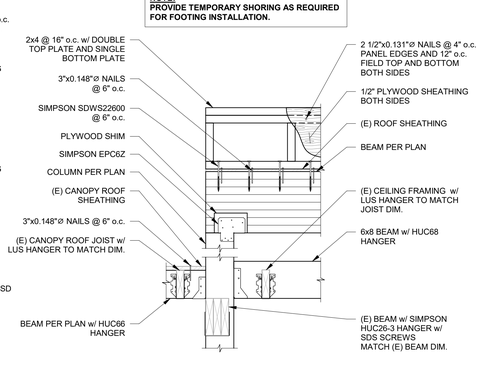

15 S6.10 CANOPY BEAM ATTACHMENT TO WOOD COLUMN
1" = 1'-0"

NOTE:
PROVIDE TEMPORARY SHORING AS REQUIRED FOR FOOTING INSTALLATION.

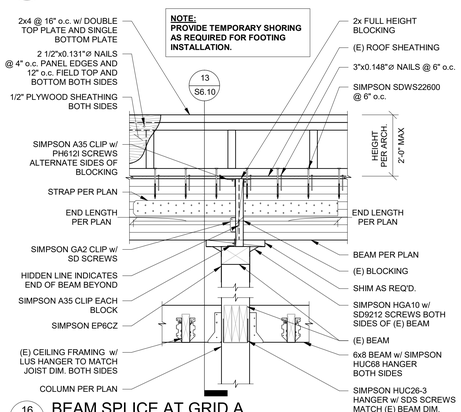

16 S6.10 BEAM SPLICE AT GRID A
1" = 1'-0"

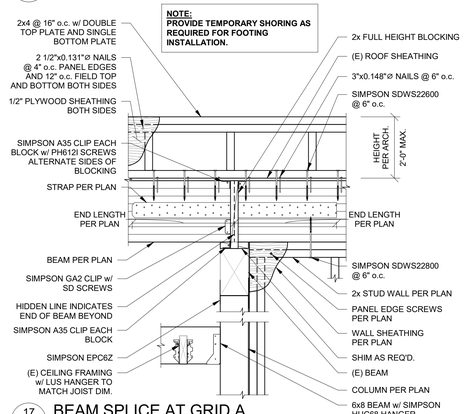

17 S6.10 BEAM SPLICE AT GRID A
1" = 1'-0"

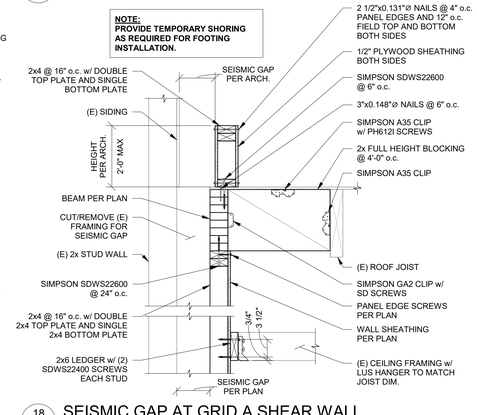

18 S6.10 SEISMIC GAP AT GRID A SHEAR WALL
1" = 1'-0"

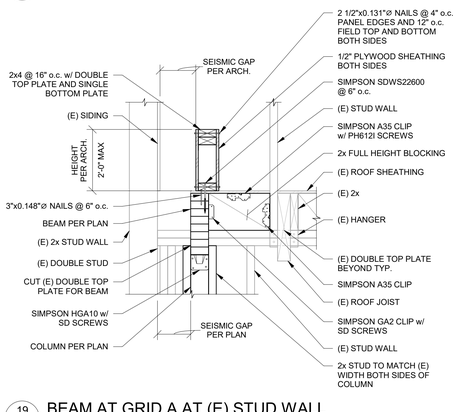

19 S6.10 BEAM AT GRID A AT (E) STUD WALL
1" = 1'-0"

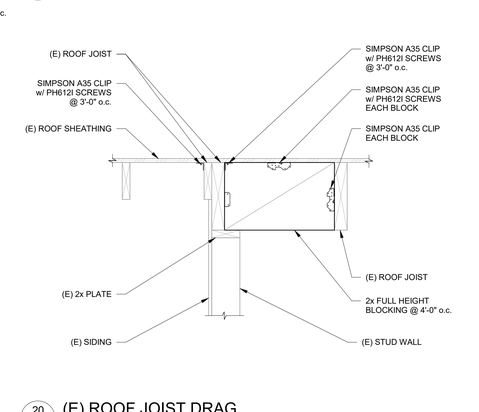

20 S6.10 (E) ROOF JOIST DRAG
1" = 1'-0"

ZCS
524 Main Street, Suite 2
Oregon City, OR 97045
503.659.2205

LAUREL ELEMENTRY SCHOOL
1401 LAUREL ST,
JUNCTION CITY, OR 97448

LAUREL ELEMENTARY SCHOOL SEISMIC RETROFIT

△	DESCRIPTION	DATE:

PROJECT NO.	P-2973-24
DRAWN:	SJL
CHECKED:	EJT
DATE:	09-19-2025

ROOF FRAMING DETAILS

S6.10

BID AND PERMIT SET

Autodesk Docs://P2973 Laurel ES Classrooms & Cafeteria/P2973_STRUCT_R23.rvt
9/17/2025 2:46:27 PM
ONE INCH EQUALS FULL SCALE

Attachment A

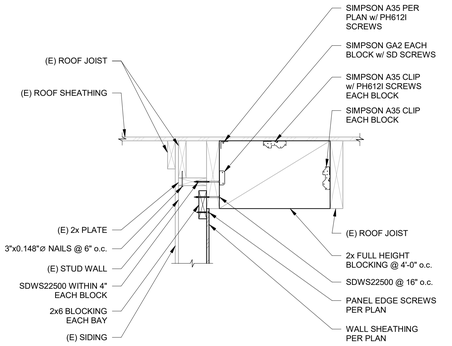

1 S6.11 (E) JOIST DRAG AT SHEAR WALL
1" = 1'-0"

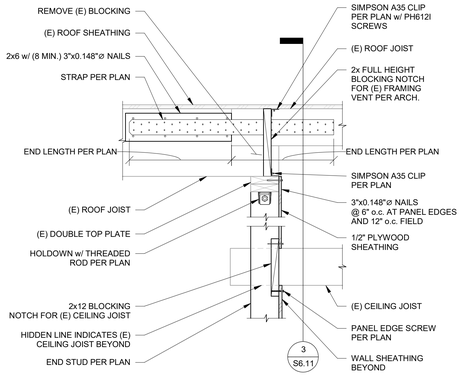

2 S6.11 DRAG ATTACHMENT AT (E) BEAM
1" = 1'-0"

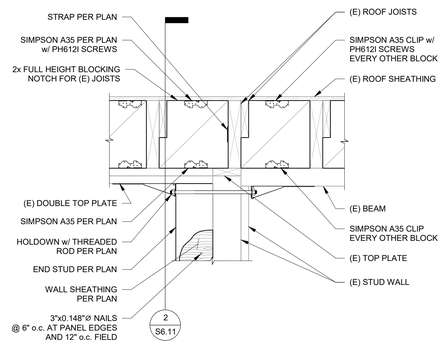

3 S6.11 DRAG ATTACHMENT TO SHEAR WALL GRID 6
1" = 1'-0"

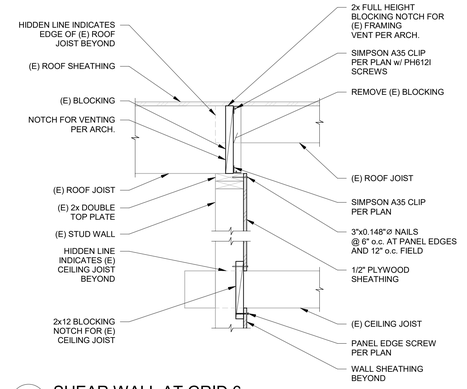

4 S6.11 SHEAR WALL AT GRID 6
1" = 1'-0"

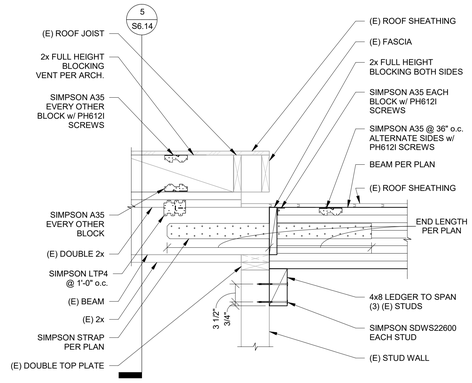

5 S6.11 DRAG BEAM SPLICE AT GRID C
1" = 1'-0"

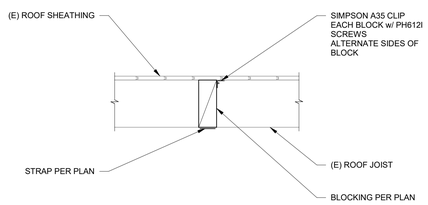

6 S6.11 BLOCKING / STRAPPING AT KITCHEN AND CAFETERIA
1" = 1'-0"

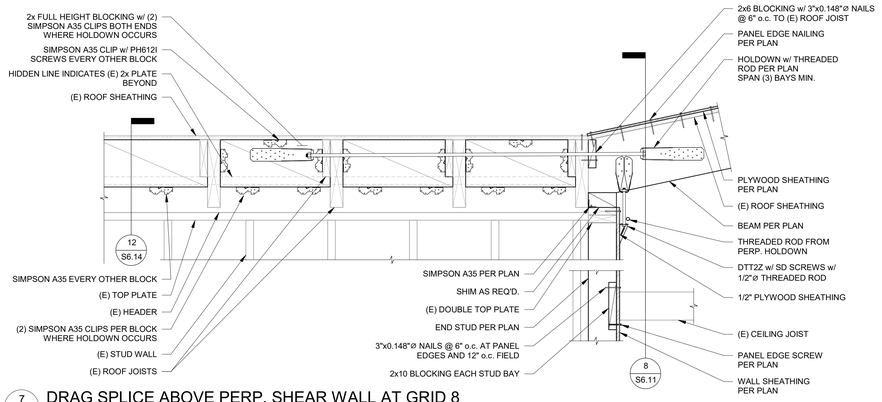

7 S6.11 DRAG SPLICE ABOVE PERP. SHEAR WALL AT GRID 8
1" = 1'-0"

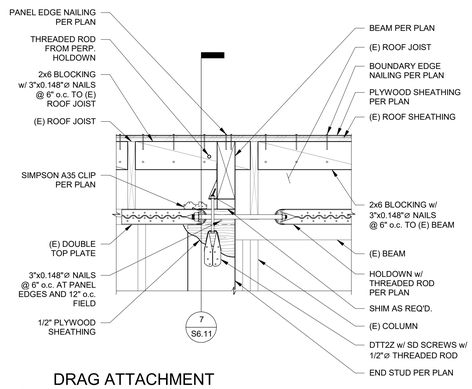

8 S6.11 DRAG ATTACHMENT TO INTERIOR SHEAR WALL MAIN ENTRANCE
1" = 1'-0"

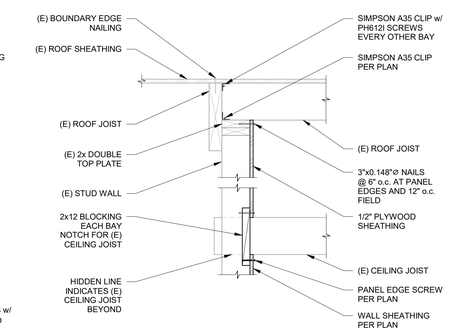

9 S6.11 NORTH SHEAR WALL AT GRID D
1" = 1'-0"

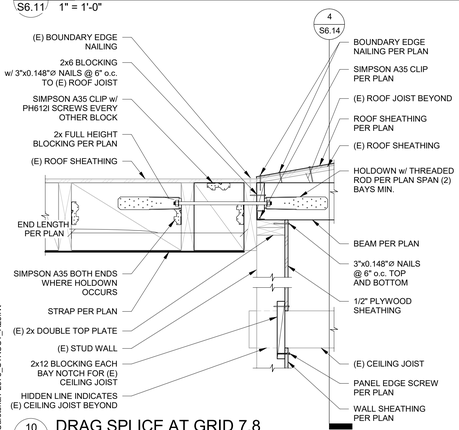

10 S6.11 DRAG SPLICE AT GRID 7.8
1" = 1'-0"

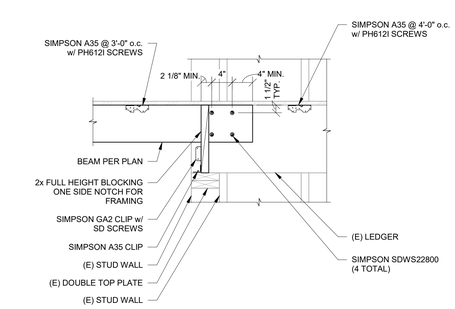

11 S6.11 DRAG SPLICE TO (E) LEDGER
1" = 1'-0"

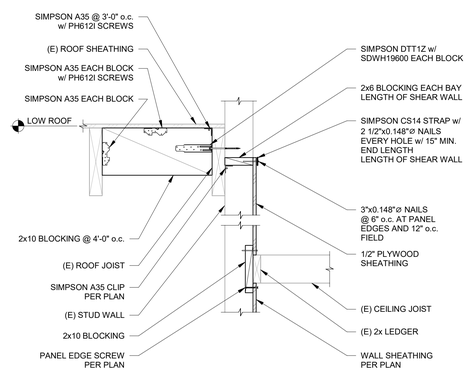

12 S6.11 SHEAR WALL AT MAIN ENTRANCE SOUTH
1" = 1'-0"

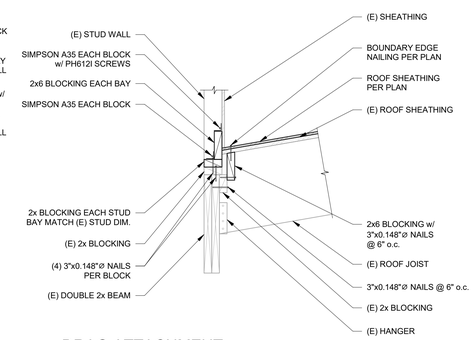

13 S6.11 DRAG ATTACHMENT TO (E) BEAM AT MAIN ENTRANCE
1" = 1'-0"

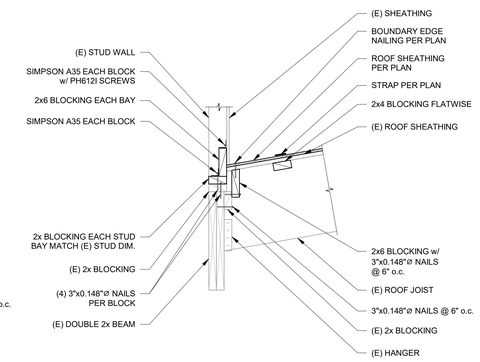

14 S6.11 DIAPHRAGM CORNER REINF. AT MAIN ENTRANCE
1" = 1'-0"

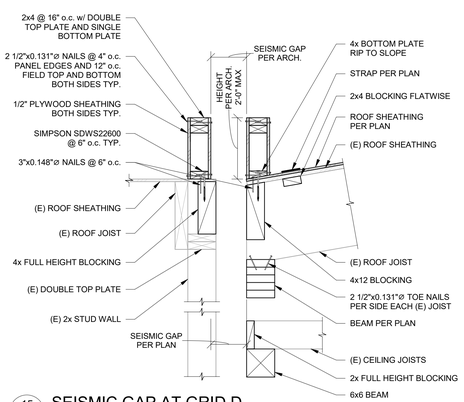

15 S6.11 SEISMIC GAP AT GRID D
1" = 1'-0"

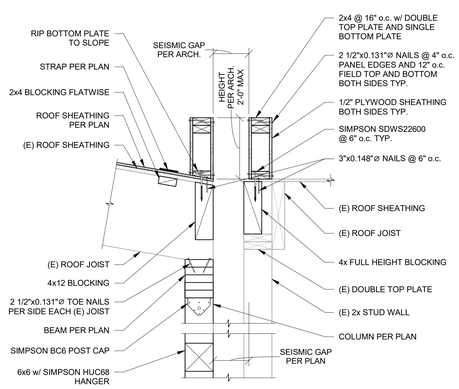

16 S6.11 SEISMIC GAP AT GRID D POST TO BEAM
1" = 1'-0"

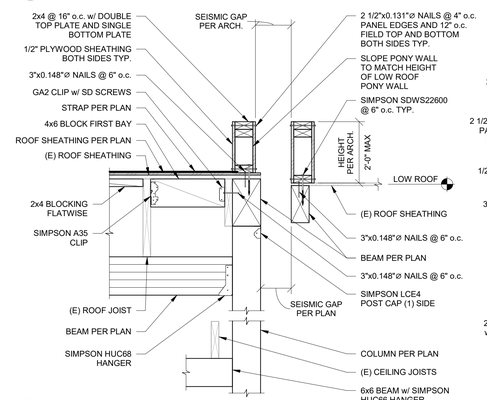

17 S6.11 SEISMIC GAP WEST CORNER GRID 9
1" = 1'-0"

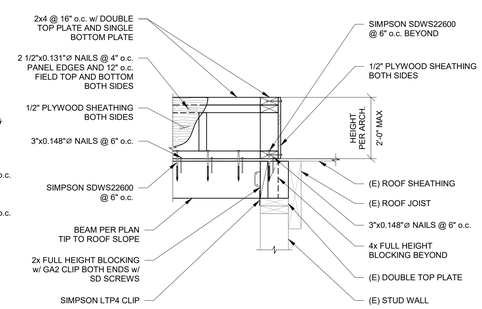

18 S6.11 LOW ROOF BEAM AT (E) STUD WALL GRID 9
1" = 1'-0"

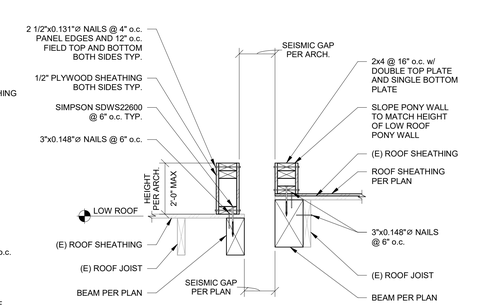

19 S6.11 SEISMIC GAP ABOVE HALLWAY GRID 9
1" = 1'-0"

ZCS
524 Main Street, Suite 2
Oregon City, OR 97045
503.659.2205

LAUREL ELEMENTARY SCHOOL
1401 LAUREL ST.,
JUNCTION CITY, OR 97448

LAUREL ELEMENTARY SCHOOL SEISMIC RETROFIT

△	DESCRIPTION	DATE:

PROJECT NO.	P-2973-24
DRAWN:	SJL
CHECKED:	EJT
DATE:	09-19-2025

ROOF FRAMING DETAILS

S6.11

BID AND PERMIT SET

Autodesk Docs://P2973 Laurel ES Classrooms & Cafeteria/P2973_STRUCT_R23.rvt 9/17/2025 2:46:28 PM
ONE INCH EQUALS FULL SCALE

Attachment A

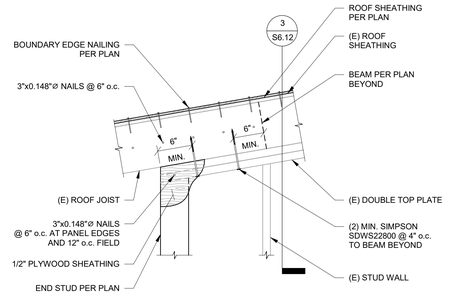

1 S6.12 DRAG ATTACHMENT TO SHEAR WALL GRID 9
1" = 1'-0"

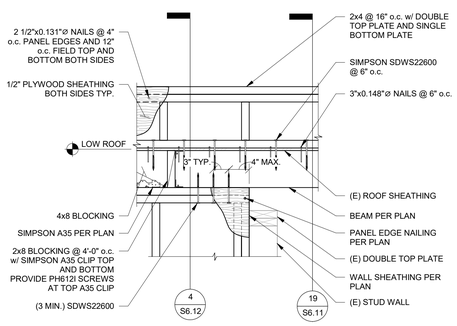

2 S6.12 BEAM TO STUD WALL AT LOW ROOF GRID 9
1" = 1'-0"

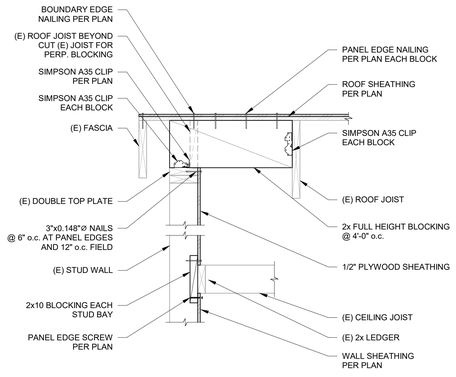

3 S6.12 SHEAR WALL AT UPPER ROOF GRID 9
1" = 1'-0"

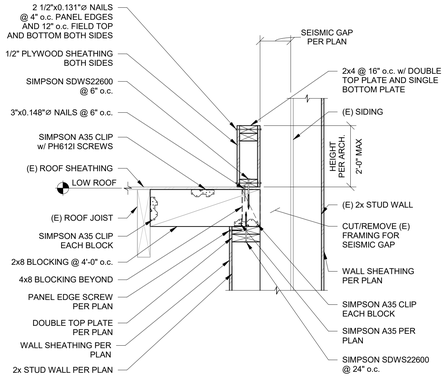

4 S6.12 LOW ROOF SHEAR WALL AT GRID 9
1" = 1'-0"

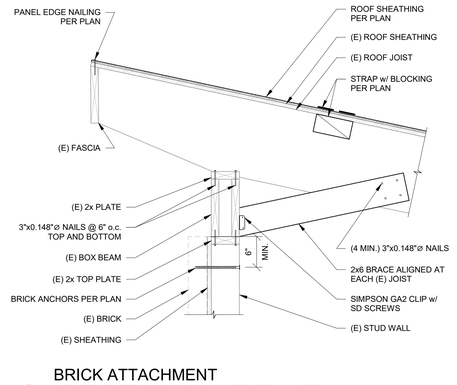

5 S6.12 BRICK ATTACHMENT AT FRONT WALL MAIN ENTRANCE
1" = 1'-0"

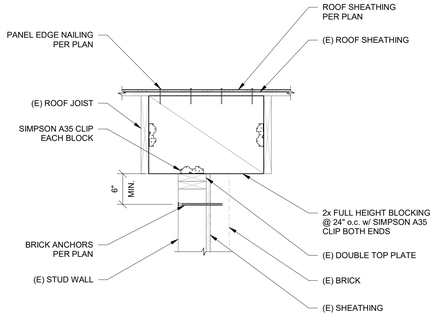

6 S6.12 BRICK ATTACHMENT AT VESTIBULE WALLS
1" = 1'-0"

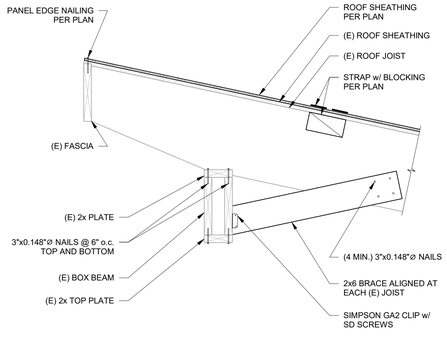

7 S6.12 BLOCKING / STRAPPING AT FRONT MAIN ENTRANCE
1" = 1'-0"

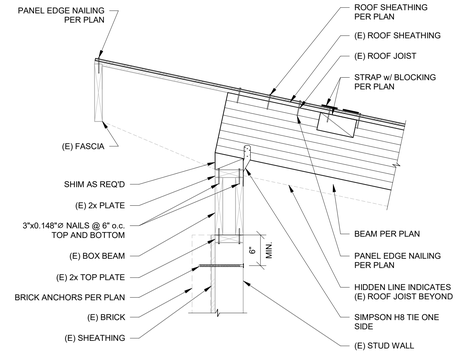

8 S6.12 DRAG BEAM ATTACHMENT TO EXT. WALL GRID 8
1" = 1'-0"

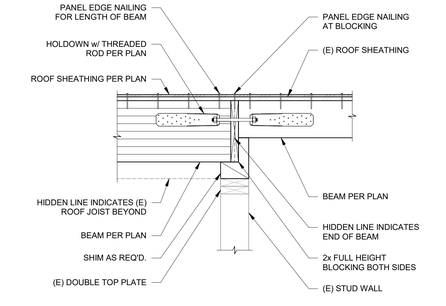

9 S6.12 BEAM SPLICE AT GRID 8
1" = 1'-0"

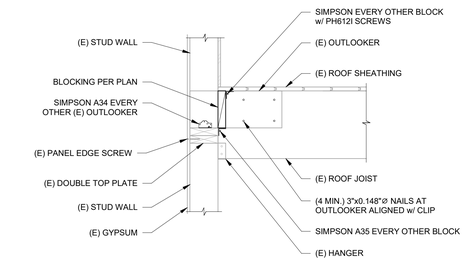

10 S6.12 BLOCKING AT GRID 8
1" = 1'-0"

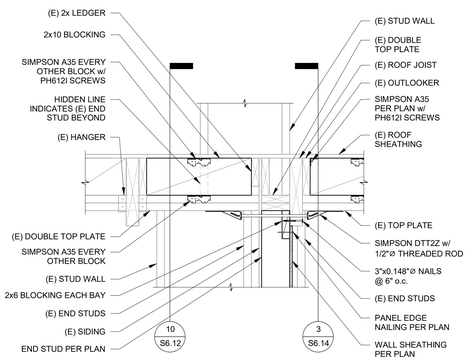

11 S6.12 TOP OF SHEAR WALL AT GRID 8
1" = 1'-0"

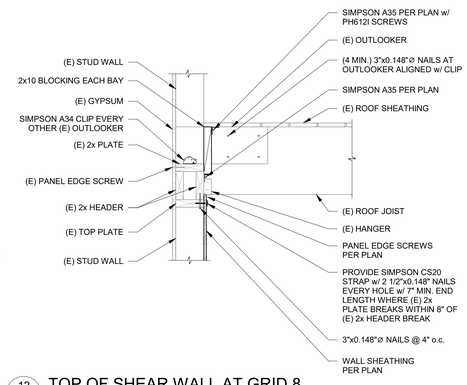

12 S6.12 TOP OF SHEAR WALL AT GRID 8
1" = 1'-0"

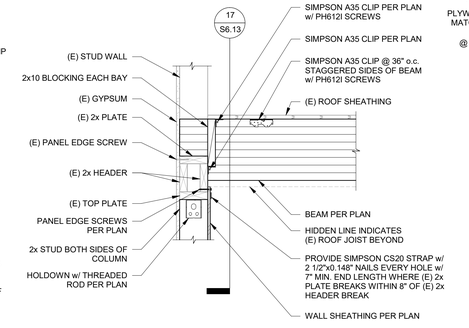

13 S6.12 DRAG BEAM SUPPORT AT PERPENDICULAR SHEAR WALL AT GRID 8
1" = 1'-0"

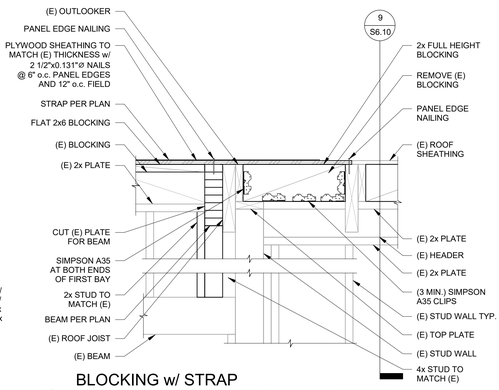

14 S6.12 BLOCKING w/ STRAP ATTACHMENT TO SHEAR WALL AT GRID 5
1" = 1'-0"

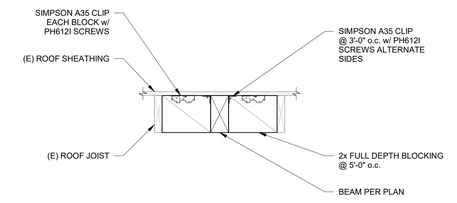

15 S6.12 TYP. DRAG BEAM AT HALLWAY
1" = 1'-0"

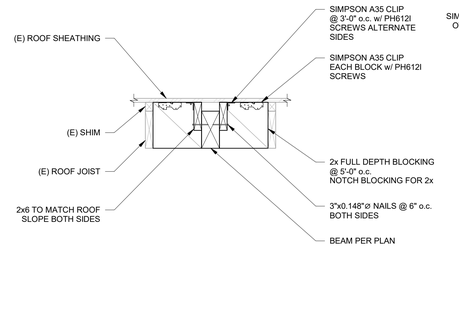

16 S6.12 DRAG BEAM CROSSING (E) ROOF RIDGE
1" = 1'-0"

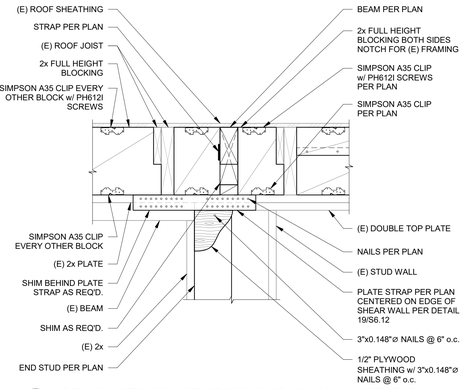

17 S6.12 DRAG ATTACHMENT TO SHEAR WALL GRID 6
1" = 1'-0"

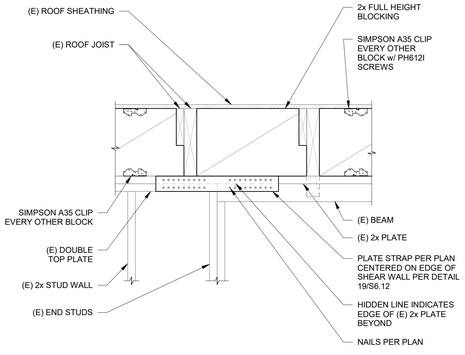

18 S6.12 PLATE STRAP GRID 6
1" = 1'-0"

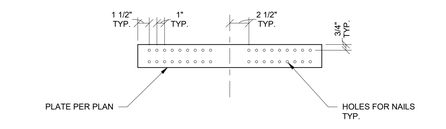

19 S6.12 PLATE STRAP DETAIL
1 1/2" = 1'-0"

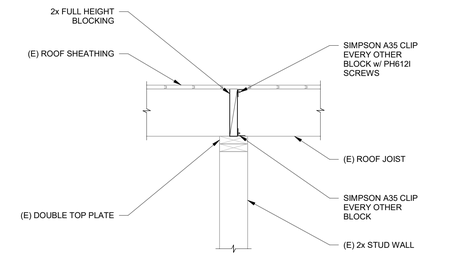

20 S6.12 BLOCKING ABOVE (E) STUD WALL GRID 6
1" = 1'-0"

ZCS
524 Main Street, Suite 2
Oregon City, OR 97045
503.659.2205

LAUREL ELEMENTRY SCHOOL
1401 LAUREL ST.
JUNCTION CITY, OR 97448

LAUREL ELEMENTARY SCHOOL SEISMIC RETROFIT

△	DESCRIPTION	DATE:

PROJECT NO.	P-2973-24
DRAWN:	SJL
CHECKED:	EJT
DATE:	09-19-2025

ROOF FRAMING DETAILS

S6.12

BID AND PERMIT SET

Autodesk Docs://P2973 Laurel ES Classrooms & Cafeteria/P2973_STRUCT_R23.rvt
9/17/2025 2:46:28 PM
ONE INCH EQUALS FULL SCALE

Attachment A

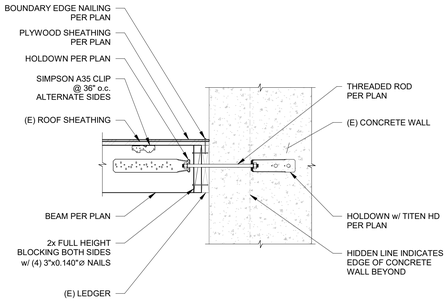

1 S6.13 CANOPY DRAG ATTACHMENT TO (E) CONCRETE WALL
1" = 1'-0"

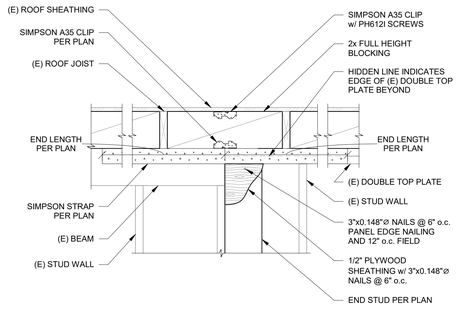

2 S6.13 DRAG SPLICE ALONG GRID D
1" = 1'-0"

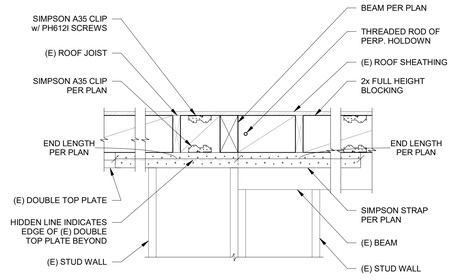

3 S6.13 DRAG SPLICE ALONG GRID D
1" = 1'-0"

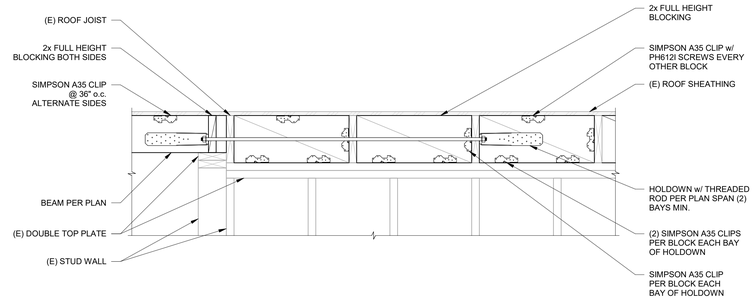

4 S6.13 DRAG BEAM TO BLOCKING SPLICE ALONG GRID 6
1" = 1'-0"

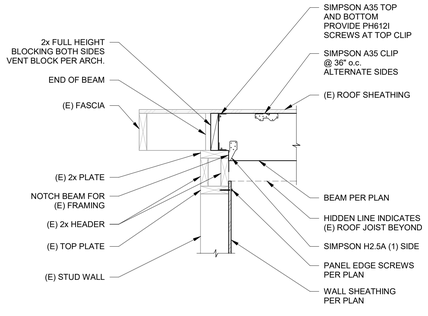

5 S6.13 DRAG BEAM AT EXTERIOR WALL GRID 6
1" = 1'-0"

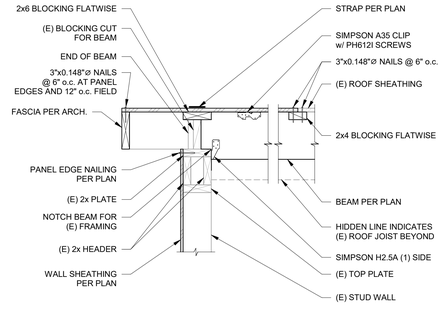

6 S6.13 DRAG BEAM AT EXTERIOR WALL ALONG GRID B.6
1" = 1'-0"

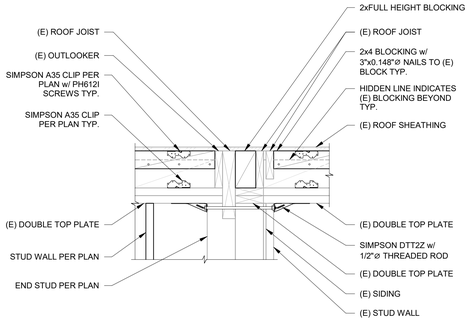

7 S6.13 DRAG ATTACHMENT TO SHEAR WALL GRID 5
1" = 1'-0"

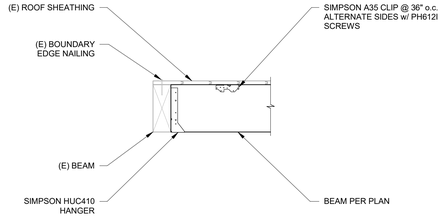

8 S6.13 DRAG BEAM ATTACHMENT TO (E) CANOPY BEAM
1" = 1'-0"

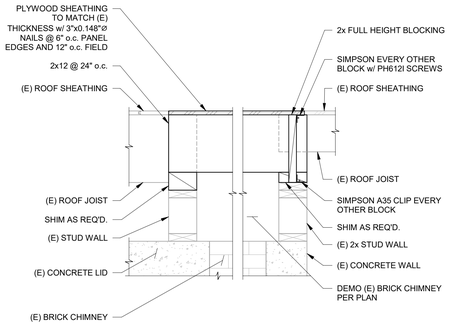

9 S6.13 ROOF INFILL FOR (E) CHIMNEY
1" = 1'-0"

NOTE:
PROVIDE TEMPORARY SHORING AS REQUIRED FOR FOOTING INSTALLATION.

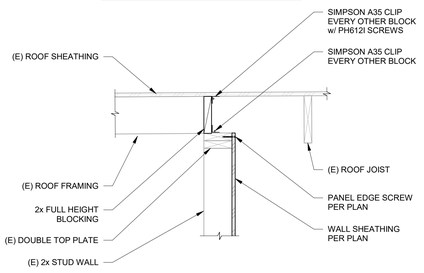

10 S6.13 SHEAR WALL PERP. TO FRAMING
1" = 1'-0"

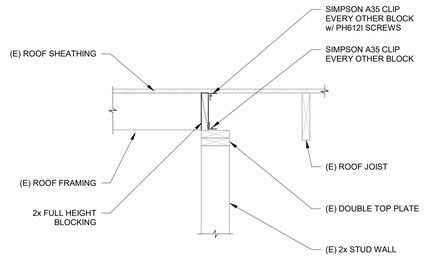

11 S6.13 STUD WALL PERP. TO FRAMING
1" = 1'-0"

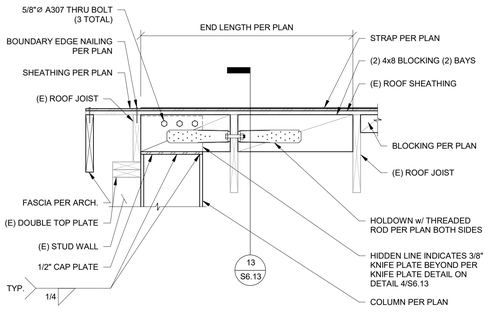

12 S6.13 ATTACHMENT TO WF COLUMN SIDE VIEW
1" = 1'-0"

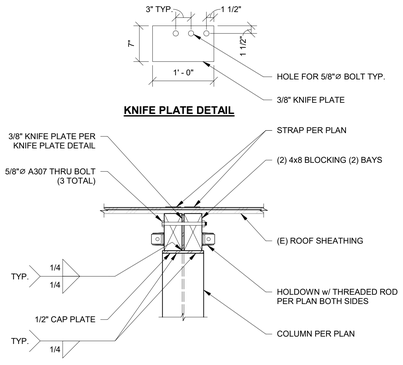

13 S6.13 ATTACHMENT TO WF COLUMN SECTION
1" = 1'-0"

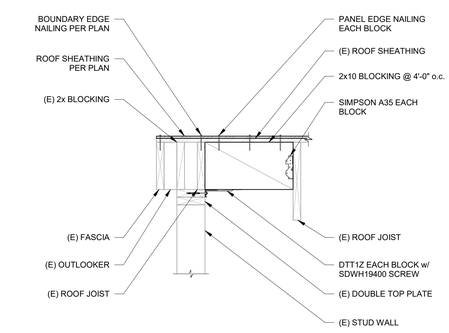

14 S6.13 UPPER ROOF DIAPHRAGM EDGE GRID 7.8
1" = 1'-0"

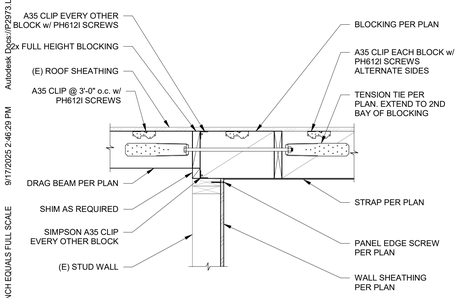

15 S6.13 DRAG BEAM TO DRAG BLOCKING CONNECTION
1" = 1'-0"

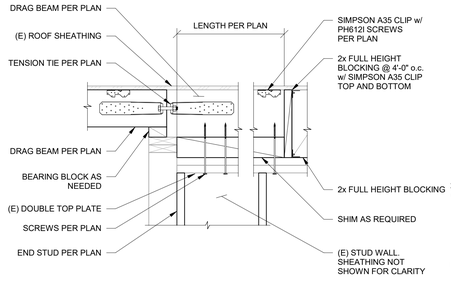

16 S6.13 DRAG BEAM TO SHEAR WALL CONNECTION
1" = 1'-0"

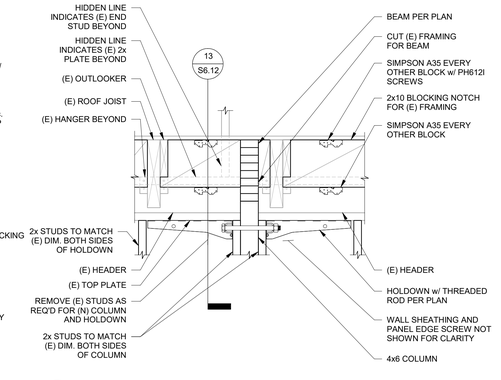

17 S6.13 BEAM POCKET AT GRID C
1" = 1'-0"

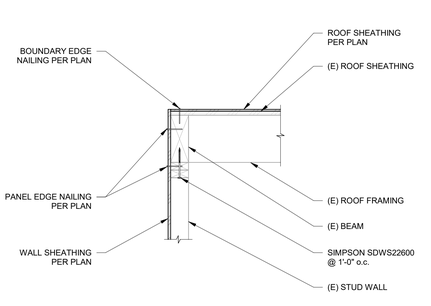

18 S6.13 CANOPY SHEAR WALL
1" = 1'-0"

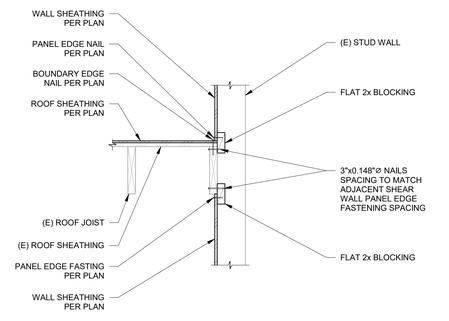

19 S6.13 SHEAR WALL GRID C AT CANOPY
1" = 1'-0"

ZCS
524 Main Street, Suite 2
Oregon City, OR 97045
503.659.2205

LAUREL ELEMENTRY SCHOOL
1401 LAUREL ST.,
JUNCTION CITY, OR 97448

LAUREL ELEMENTARY SCHOOL SEISMIC RETROFIT

△	DESCRIPTION	DATE:

PROJECT NO.	P-2973-24
DRAWN:	SJL
CHECKED:	EJT
DATE:	09-19-2025

ROOF FRAMING DETAILS

S6.13

BID AND PERMIT SET

Autodesk Docs://P2973_Laurel ES Classrooms & Cafeteria/P2973_STRUCT_R23.rvt 9/17/2025 2:46:29 PM

ONE INCH EQUALS FULL SCALE

Attachment A

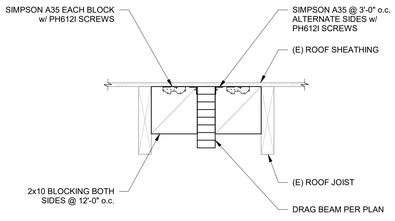

1 S6.14 TYP. DRAG BEAM TO SHEATHING CONNECTION
1" = 1'-0"

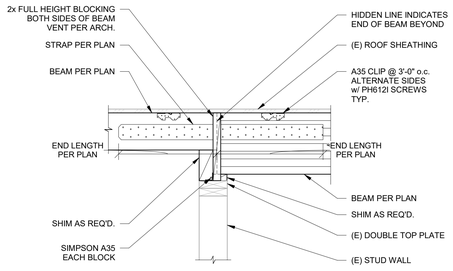

2 S6.14 DRAG BEAM CONNECTION
1" = 1'-0"

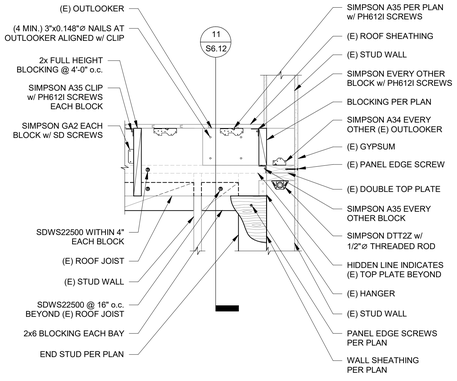

3 S6.14 DRAG SPLICE AT GRID B SHEAR WALL
1" = 1'-0"

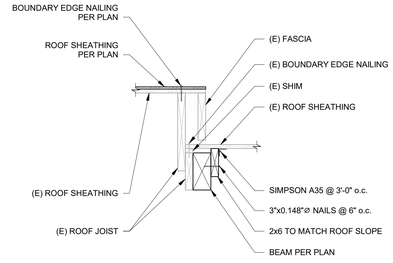

4 S6.14 DRAG BEAM ABOVE HALLWAY AT ROOF STEP
1" = 1'-0"

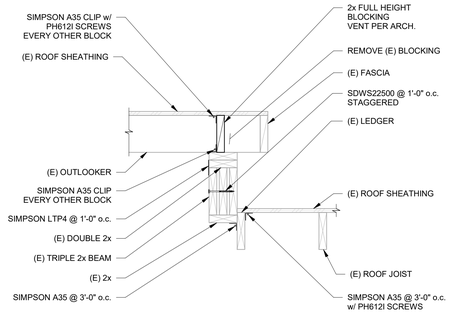

5 S6.14 IN-PLANE ATTACHMENT AT (E) BEAM GRID C
1" = 1'-0"

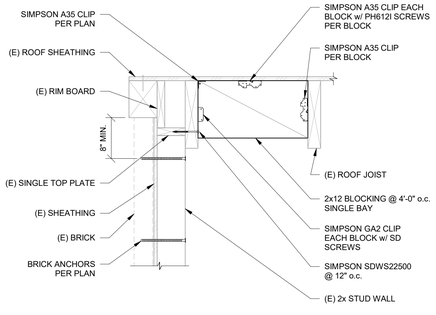

6 S6.14 (E) BRICK ATTACHMENT TO STUD WALL GRID 1
1" = 1'-0"

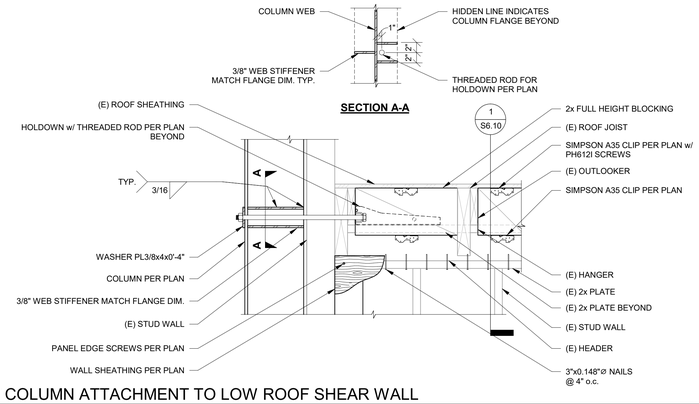

7 S6.14 WF COLUMN ATTACHMENT TO LOW ROOF SHEAR WALL
1" = 1'-0"

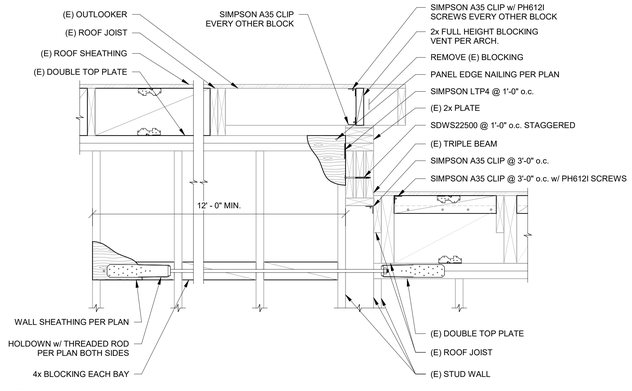

8 S6.14 DRAG SPLICE AT ROOF STEP GRID 6
1" = 1'-0"

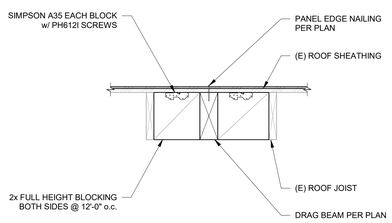

9 S6.14 CANOPY DRAG BEAM TO SHEATHING CONNECTION
1" = 1'-0"

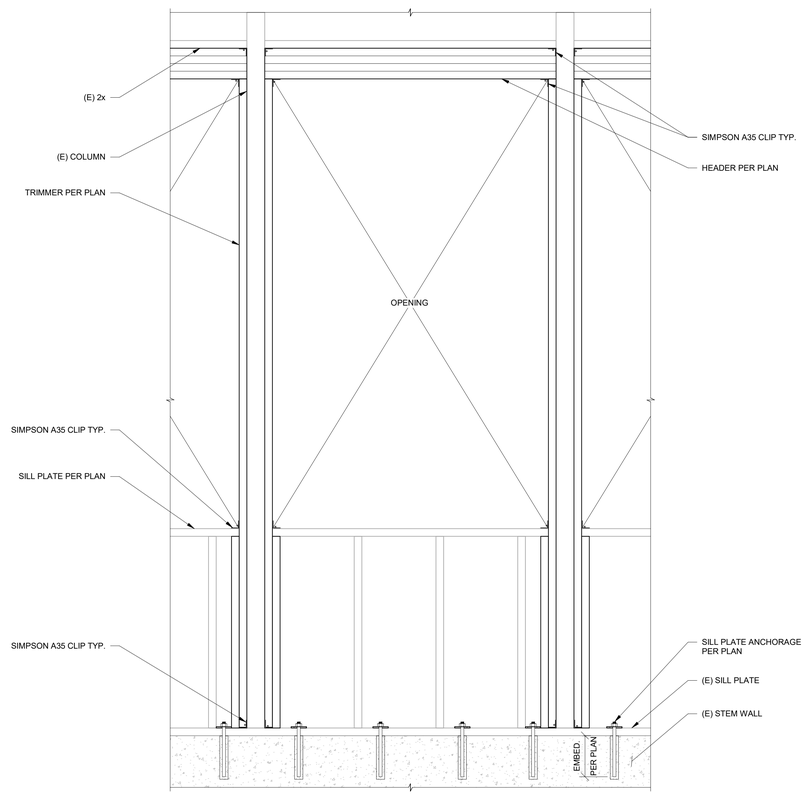

10 S6.14 TYP. ATTACHMENT AT OPENING
1" = 1'-0"

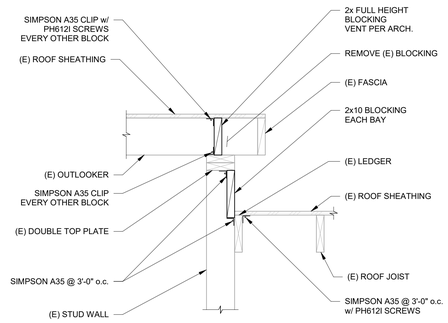

11 S6.14 IN-PLANE ATTACHMENT AT ROOF STEP GRID C
1" = 1'-0"

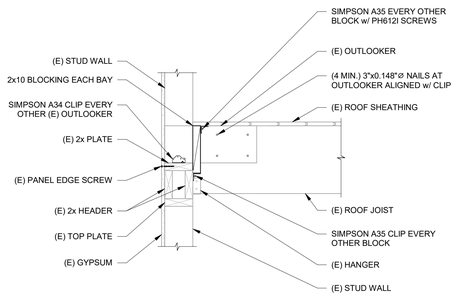

12 S6.14 TOP OF STUD WALL AT GRID 8
1" = 1'-0"

ZCS
524 Main Street, Suite 2
Oregon City, OR 97045
503.659.2205

LAUREL ELEMENTRY SCHOOL
1401 LAUREL ST,
JUNCTION CITY, OR 97448

LAUREL ELEMENTARY SCHOOL SEISMIC RETROFIT

△	DESCRIPTION	DATE:

PROJECT NO.	P-2973-24
DRAWN:	SJL
CHECKED:	EJT
DATE:	09-19-2025

ROOF FRAMING DETAILS

S6.14

BID AND PERMIT SET

ONE INCH EQUALS FULL SCALE 9/17/2025 2:46:29 PM Autodesk Docs://P2973 Laurel ES Classrooms & Cafeteria/P2973_STRUCT_R23.rvt

THE FOLLOWING ARE DRAWINGS PREPARED BY PBS

GENERAL NOTES

1. THIS DRAWING IS DIAGRAMMATIC. IT IS FOR GENERAL ASBESTOS ABATEMENT AND SAMPLE LOCATION INFORMATION ONLY.
2. THIS DRAWING ONLY SHOWS THOSE ASBESTOS-CONTAINING BUILDING MATERIALS THAT ARE TO BE REMOVED TO ACCOMMODATE THE SEISMIC UPGRADE PROJECT.
3. ASBESTOS-CONTAINING BUILDING MATERIALS ARE KNOWN TO EXIST IMMEDIATELY ADJACENT TO ABATEMENT AND OTHER SCOPE OF WORK ITEMS IN THE SCHOOL BUILDING. DO NOT DISTURB ASBESTOS-CONTAINING MATERIALS TO REMAIN.
4. REFER TO THE PRE-RENOVATION HAZARDOUS BUILDING MATERIALS SURVEY REPORT, PBS ENGINEERING AND ENVIRONMENTAL, JANUARY 2025 FOR ADDITIONAL ASBESTOS-CONTAINING MATERIAL INFORMATION.
5. REMOVE ASBESTOS-CONTAINING BUILDING MATERIALS IN ACCORDANCE WITH SPECIFICATION SECTION 02 82 13.
6. ALL PAINT IS TO BE CONSIDERED LEAD-BASED. WORK TO BE PERFORMED IN ACCORDANCE WITH SPECIFICATION 02 83 14.

KEY NOTES

1. ASBESTOS-CONTAINING DOOR CAULK TO BE REMOVED.
2. ASBESTOS-CONTAINING PIPE INSULATION TO BE REMOVED.
3. ASBESTOS-CONTAINING DUCT PAINT/MASTIC TO BE REMOVED.

LEGEND

- ASBESTOS-CONTAINING FLOOR TILE AND MASTIC WITH <1% ASBESTOS COVEBASE MASTIC TO BE REMOVED
- BID ALTERNATE 1 - ASBESTOS-CONTAINING FLOOR TILE AND MASTIC WITH <1% ASBESTOS COVEBASE MASTIC TO BE REMOVED.
- ASBESTOS-CONTAINING WINDOW CAULK TO BE REMOVED

ASBESTOS SAMPLE SYMBOLS

◇ 007 — DRAWING REFERENCE TO BULK SAMPLE FIELD CODE, SEE INVENTORY OF SAMPLES
— MATERIAL SYMBOL

NOT TESTED	NEGATIVE -	POSITIVE +	
○	⊖	●	THERMAL SYSTEM INSULATION
□	⊟	■	SURFACING MATERIAL
◇	◇	◆	MISCELLANEOUS MATERIAL

INVENTORY OF ASBESTOS SAMPLES

DRAWING REFERENCE	FIELD CODE	LAB RESULT	MATERIAL SAMPLED
◇ 001	24011830-0001	(-/-)	COVEBASE/MASTIC
◆ 002	24011830-0002	(+/+)	FLOOR TILE/MASTIC
◆ 003	24011830-0003	(+)	FLOOR TILE/MASTIC
◆ 004	24011830-0004	(+/-)	FLOOR TILE/MASTIC
◇ 005	24011830-0005	(-/-)	COVEBASE/MASTIC
◇ 006	24011830-0006	(-)	GYPSUM WALLBOARD/ JOINT COMPOUND/MASTIC
◆ 007	24011830-0007	(+/<1%)	FLOOR TILE/MASTIC
◆ 008	24011830-0008	(+/<1%)	FLOOR TILE/MASTIC
◆ 009	24011830-0009	(+)	FLOOR TILE/MASTIC
◇ 010	24011830-0010	(-/-/-)	MATERIAL DEBRIS
◇ 011	24011830-0011	(-)	MILLBOARD
◇ 012	24011830-0012	(-/-)	BRICK/MORTAR
◆ 013	24011830-0013	(-/<1%)	CEILING TILE
◇ 014	24011830-0014	(-/-/-)	SHEET FLOOR COVERING/ MASTIC
◇ 015	24011830-0015	(-/-/-)	SHEET FLOOR COVERING/ MASTIC
◇ 016	24011830-0016	(-/-)	GYPSUM WALLBOARD
◆ 017	24011830-0017	(+/<1%)	FLOOR TILE/MASTIC
◆ 018	24011830-0018	(+/<1%)	FLOOR TILE/MASTIC
◇ 019	24011830-0019	(-)	CEILING TILE
◆ 020	24011830-0020	(+/<1%)	FLOOR TILE/MASTIC
◆ 021	24011830-0021	(+/<1%/+/<1%)	FLOOR TILE/MASTIC
◆ 022	24011830-0022	(+/-)	FLOOR TILE/MASTIC
◆ 023	24011830-0023	(<1%/-/-)	FLOOR TILE/MASTIC
◇ 024	24011830-0024	(-)	CERAMIC TILE GROUT
◆ 025	24011830-0025	(<1%/-/-)	FLOOR TILE/MASTIC
◇ 026	24011830-0026	(-)	CERAMIC TILE GROUT
◇ 027	24011830-0027	(-)	CERAMIC TILE GROUT
◇ 028	24011830-0028	(-)	CERAMIC TILE GROUT
◇ 029	24011830-0029	(-)	LAY-IN CEILING TILE
◆ 030	24011830-0030	(<1%/<1%/-)	FLOOR TILE/MASTIC
◆ 031	24011830-0031	(+/<1%)	FLOOR TILE/MASTIC
◆ 032	24011830-0032	(-/+/-/-)	FLOOR TILE/MASTIC
◆ 033	24011830-0033	(-/-/<1%)	COVEBASE/MASTIC
◆ 034	24011830-0034	(+/<1%)	FLOOR TILE/MASTIC
◇ 074	24011830-0074	(-/-)	FLOOR TILE/MASTIC
◇ 075	24011830-0075	(-/-)	COVEBASE/MASTIC
◇ 076	24011830-0076	(-)	CEILING TILE
◇ 077	24011830-0077	(-)	GLASS BLOCK GROUT
◆ 078	24011830-0078	(+)	CAULK/EXTERIOR BUILDING SEALANT

INVENTORY OF ASBESTOS SAMPLES (CONTINUED)

DRAWING REFERENCE	FIELD CODE	LAB RESULT	MATERIAL SAMPLED
◇ 079	24011830-0079	(-/-)	COVEBASE/MASTIC
◇ 080	24011830-0080	(-)	WINDOW GLAZING COMPOUND
◆ 081	24011830-0081	(<1%)	WINDOW GLAZING COMPOUND
◇ 082	24011830-0082	(-)	SEALANT
◇ 083	24011830-0083	(-)	WINDOW GLAZING COMPOUND
◇ 084	24011830-0084	(-)	WINDOW GLAZING COMPOUND
◇ 085	24011830-0085	(-)	SEALANT
◆ 035	24011830-0035	(+/<1%)	FLOOR TILE/MASTIC
◆ 036	24011830-0036	(+/-)	FLOOR TILE/MASTIC
◇ 037	24011830-0037	(-)	WINDOW GLAZING
◆ 038	24011830-0038	(+/-)	FLOOR TILE/MASTIC
◇ 039	24011830-0039	(-/-)	FLOOR TILE/MASTIC
◇ 040	24011830-0040	(-/-)	RUBBER FLOOR/MASTIC
◇ 041	24011830-0041	(-/-/-)	COVEBASE/MASTIC
◇ 042	24011830-0042	(-/-)	PANELING/GYPSUM WALLBOARD
◇ 043	24011830-0043	(-/-)	BRICK/MORTAR
◆ 044	24011830-0044	(-/-/-/<1%)	COVEBASE/MASTIC
◇ 045	24011830-0045	(-)	MASTIC
◇ 046	24011830-0046	(-)	GYPSUM WALLBOARD/ JOINT COMPOUND
◇ 047	24011830-0047	(-/-)	MASTIC
◇ 048	24011830-0048	(-)	CEILING TILE
◇ 049	24011830-0049	(-)	LAY-IN CEILING TILE
◇ 050	24011830-0050	(-)	LAY-IN CEILING TILE
◇ 051	24011830-0051	(-)	CEILING TILE
● 052	24011830-0052	(+/-)	AIR CELL
● 053	24011830-0053	(+/+)	HARD FITTING
◇ 054	24011830-0054	(-)	BRICK/MORTAR
● 055	24011830-0055	(+)	BOILER INSULATION
● 056	24011830-0056	(+)	WATER TANK INSULATION
◇ 057	24011830-0057	(-/-)	MASTIC
◆ 058	24011830-0058	(+/-)	FLOOR TILE/MASTIC
◆ 059	24011830-0059	(+/-)	FLOOR TILE/MASTIC
◆ 060	24011830-0060	(+/-)	FLOOR TILE/MASTIC
◇ 061	24011830-0061	(-)	MILLBOARD
◇ 062	24011830-0062	(-)	WINDOW GROUT
◆ 063	24011830-0063	(+)	CAULK/EXTERIOR BUILDING SEALANT
◇ 064	24011830-0064	(-/-)	GYPSUM WALLBOARD/ JOINT COMPOUND
◇ 065	24011830-0065	(-/-)	JOINT COMPOUND
◇ 066	24011830-0066	(-/-)	GYPSUM WALLBOARD/
◇ 067	24011830-0067	(-/-)	JOINT COMPOUND
◇ 068	24011830-0068	(-)	MILLBOARD
◆ 069	24011830-0069	(+)	CAULK/EXTERIOR BUILDING SEALANT
◇ 070	24011830-0070	(-)	GLASS BLOCK GROUT
◇ 071	24011830-0071	(-/-)	BRICK/MORTAR
◇ 072	24011830-0072	(-)	CEILING TILE
◆ 073	24011830-0073	(-/-/+/-)	FLOOR TILE/MASTIC

LEAD SAMPLE SYMBOLS

△ 1007 — DRAWING REFERENCE TO LEAD SAMPLE FIELD CODE, SEE INVENTORY OF SAMPLES
— MATERIAL SYMBOL

▲ LEAD DETECTED △ BELOW THE LIMIT OF DETECTION

INVENTORY OF AA LEAD SAMPLES

SAMPLE NUMBER	FIELD CODE	LAB RESULT (ppm)	MATERIAL DESCRIPTION
▲ 1001	24011830-1001	7,170	PAINT ON ROOM 6 CLOSET INTERIOR; WOOD, BEIGE, GOOD
▲ 1002	24011830-1002	7,720	PAINT ON ROOM 3 CLOSET INTERIOR; WOOD, BEIGE, GOOD
▲ 1003	24011830-1003	39.2	PAINT ON ROOM 1 WINDOWSILL; WOOD, BEIGE, GOOD
△ 1004	24011830-1004	<12.2	PAINT ON BUILDING EXTERIOR CAFETERIA; WOOD SIDING, GRAY, GOOD

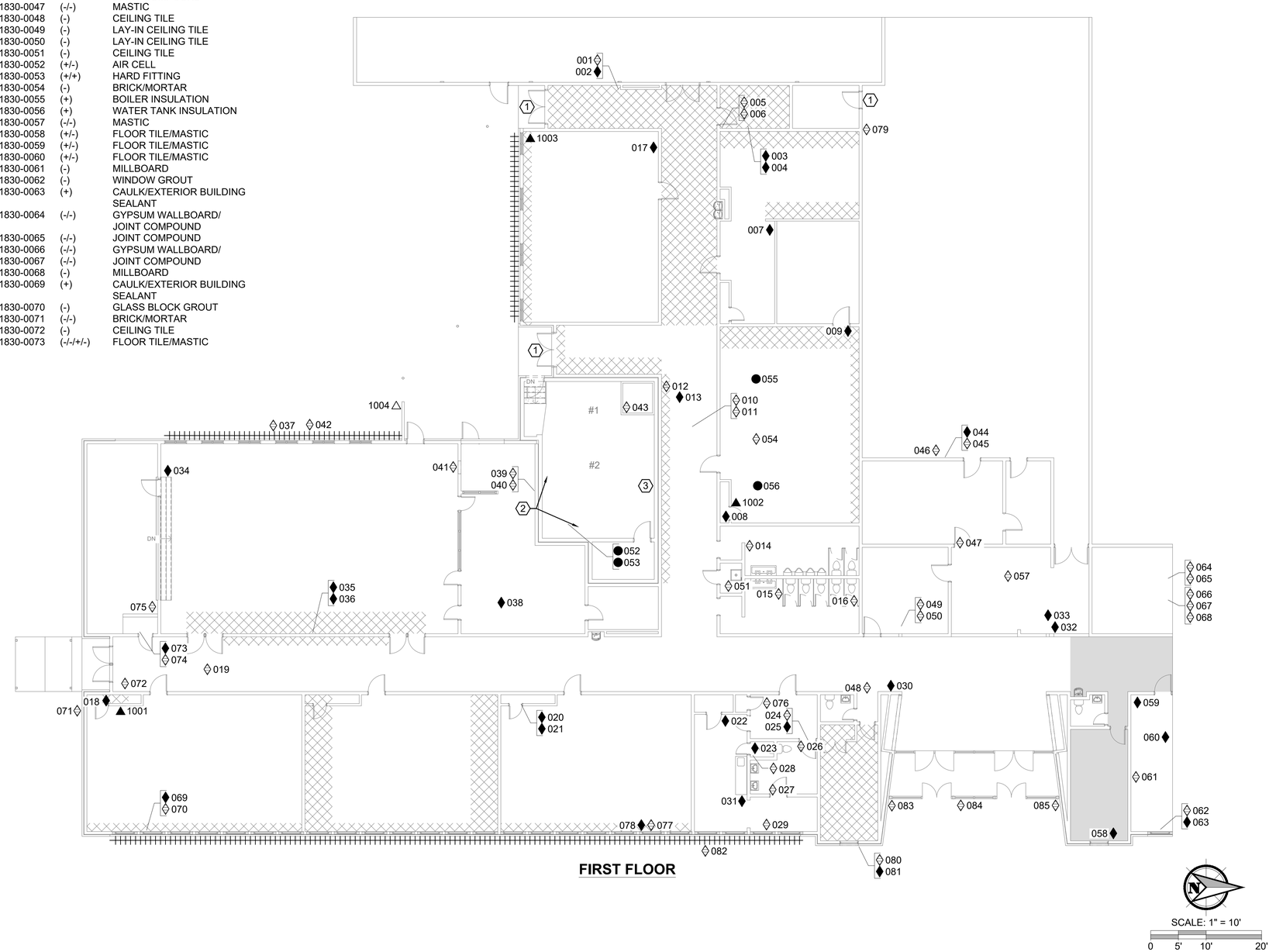

FIRST FLOOR

PREPARED FOR: JUNCTIN CITY SCHOOL DISTRICT

PBS Engineering and Environmental LLC
4412 SW Corbett Avenue
Portland, OR 97239
503.248.1939
pbsusa.com
PBS AN APEX COMPANY

HAZARDOUS MATERIAL ABATEMENT PLAN
LAUREL ELEMENTARY SCHOOL
1401 LAUREL STREET, JUNCTION CITY, OREGON

NO	REVISION	DATE	BY	APPD

DRAWN BY: JAB
CHECKED: RD
DATE: MARCH 2025
PROJECT NUMBER: 24011830_0002
SHEET DRAWING NO: HA1
SHEET 1 OF 1

FULL SIZE SHEET FORMAT IS 24X36; IF PRINTED SIZE IS NOT 24X36, THEN THIS SHEET FORMAT HAS BEEN MODIFIED & INDICATED DRAWING SCALE IS NOT ACCURATE.

Filename: L:\Projects_DVP\JUN0072\24011830\24011830\DWG\ABATEMENT\24011830_0002_HA1.dwg Layout Tab: 11X17 User: James Blanco CAD Plot Date/Time: 4/1/2025 10:20:36 AM

Attachment A

PREVAILING WAGE RATES

for

Public Works Contracts in Oregon

Oregon Bureau of Labor and Industries

Prevailing Wage Rates for Public Works Contracts

Christina E. Stephenson
Labor Commissioner
Rates Effective July 5, 2025

In this rate book are the new prevailing wage rates for Oregon non-residential public works projects, effective July 5, 2025.

Prevailing wage rates are the minimum hourly wages that must be paid to all workers employed on all public works projects. Thank you for your engagement in the process and commitment to Oregon law.

Our team is ready to help support you with any questions you have. We also offer regular, free, informational seminars and webinars for contractors and public agencies. Contact us at PWR.Email@boli.oregon.gov or (971) 245-3844.

Christina E. Stephenson
Labor Commissioner

More information about prevailing wage rates:

The Oregon Bureau of Labor & Industries publishes the prevailing wage rates (PWR) that are required to be paid to workers on non-residential public works projects in Oregon.

Separate documents, *Definitions of Covered Occupations for Public Works Contracts in Oregon,* provide occupational definitions used to classify the duties performed on public works projects. These definitions are used to find the correct prevailing wage rate.

The rate book and definition publications are available online at https://www.oregon.gov/boli, as well as additional information, supporting documents, and forms.

Please contact us at PWR.Email@boli.oregon.gov or (971) 245-3844, for additional information such as:

- Applicable prevailing wage rates for projects (Generally, the rates in effect at the time the bid specifications are first advertised are those that apply for the duration of the project.)
- Federal Davis-Bacon rates (In cases where projects are subject to both state PWR and federal Davis-Bacon rates, the higher wage must be paid.)
- Required PWR provisions for specifications and contracts
- Apprentice rates

TABLE OF CONTENTS

JULY 5, 2025

Required Postings for Contractors and Subcontractors 1

Public Works Bonds 2

Finding the Correct Prevailing Wage Rate 3

Prevailing Wage Rates by Occupations 4

List of Ineligible Contractors 27

Forms necessary to comply with ORS 279C.800 through ORS 279C.870 can be found on our website at https://www.oregon.gov/boli/employers/Pages/prevailing-wage.aspx. Contractors are encouraged to use and keep on file the forms provided as master copies for use on future prevailing wage rate projects.

All of the information in this booklet can be accessed and printed from the Internet at: www.oregon.gov/BOLI

Pursuant to ORS 279C.800 to ORS 279C.870, the prevailing wage rates contained in this booklet have been adopted for use on public works contracts in Oregon.

Required Postings for Prevailing Wage Contractors and Subcontractors

PREVAILING WAGE RATES

Every contractor and subcontractor engaged in work on a public works must post the applicable prevailing wage rates for that project in an obvious place on the worksite, so workers have ready access to the information.

DETAILS OF FRINGE BENEFIT PROGRAMS

When a contractor or subcontractor provides or contributes to a health and welfare plan or a pension plan, or both, for employees who are working on a public works project, the details of all fringe benefit plans or programs must be posted on the worksite.

The posting must include a description of the plan or plans, information about how and where claims can be made and where to obtain more information. The notice must be posted in an obvious place on the work site in the same location as the prevailing wage rates.

WORK SCHEDULE

Contractors and subcontractors must give workers their regular work schedule (days of the week and number of hours per day) in writing before beginning work on the project.

Contractors and subcontractors may provide the schedule at the time of hire, prior to starting work on the contract, or by posting the schedule in a location frequented by employees, along with the prevailing wage rate information and any fringe benefit information.

If an employer fails to give written notice of the worker's schedule, the work schedule will be presumed to be a five-day schedule. The schedule may only be changed if the change is intended to be permanent and is not designed to evade the PWR overtime requirements.

ORS 279C.840(4); OAR 839-025-0033(1). ORS 279C.840(5); OAR 839-025-0033(2). ORS 279C.540(2); OAR 839-025-0034.

PUBLIC WORKS BONDS

Every contractor and subcontractor who works on public works projects subject to the prevailing wage rate (PWR) law is required to file a $30,000 **"PUBLIC WORKS BOND"** with the Construction Contractors' Board (CCB). This includes flagging and landscaping companies, temporary employment agencies, and sometimes sole proprietors.

The key elements of ORS 279C.830(2) and ORS 279C.836 specify that:

- Specifications for every contract for public works must contain language stating that the contractor and every subcontractor must have a public works bond filed with the CCB before starting work on the project, unless otherwise exempt.
- Every contract awarded by a contracting agency must contain language requiring the contractor:
  - To have a public works bond filed with the CCB before starting work on the project, unless otherwise exempt; and
  - To include in every subcontract a provision requiring the subcontractor to have a public works bond filed with the CCB before starting work on the project unless otherwise exempt
- Every subcontract that a contractor or subcontractor awards in connection with a public works contract between a contractor and a public agency must require any subcontractor to have a public works bond filed with the CCB before starting work on the public works project, unless otherwise exempt.
- Before permitting a subcontractor to start work on a public works project, contractors must first verify their subcontractors either have filed the bond or have elected not to file a public works bond due to a bona fide exemption.
- The PWR bond is to be used exclusively for unpaid wages determined to be due by the Bureau of Labor & Industries.
- The bond is in effect continuously (you do not have to have one per project).
- A public works bond is in addition to any other required bond the contractor or subcontractor is required to obtain.

Exemptions:

- Allowed for a disadvantaged business enterprise, a minority-owned business, woman-owned business, a business that a service-disabled veteran owns, or an emerging small business certified under ORS 200.055, for the first FOUR years of certification;
  - Exempt contractor must still file written verification of certification with the CCB and give the CCB written notice that they elect not to file a bond.
  - The prime contractor must give written notice to the public agency that they elect not to file a public works bond.
  - Subcontractors must give written notice to the prime contractor that they elect not to file a public works bond.
- For projects with a total project cost of $100,000 or less, a public works bond is not required. (Note this is the total project cost, not an individual contract amount.)
- Emergency projects, as defined in ORS 279A.010(f).

PREVAILING WAGE RATES

FINDING THE CORRECT PREVAILING WAGE RATE

To find the correct rate(s) required on your public works project, you will need:

- the date the project was first advertised for bid
- the county your project is in
- the duties of workers on the job

Generally, the rate you should look for is based on the date the project was first advertised for bid. (See OAR 839-025-0020(8) for information about projects that contract through a CM/GC, or contract manager/general contractor.)

The Labor Commissioner must establish the prevailing rate of wage for each region as defined in law. (See ORS 279C.800.) A map of these regions can be found on BOLI's website.

To find the correct rate in this rate book:

1. *Determine the duties that are being performed by each worker.* Use the booklet *Definitions of Covered Occupations* to find the definition that most closely matches the actual work performed by the worker. You can find this publication online at https://www.oregon.gov/boli/employers/Pages/occupational-definitions.aspx.

2. *Find the correct occupation in the "Prevailing Wage Rate for Public Works Contracts" below.* The prevailing wage rate is made up of an hourly base rate and an hourly fringe rate. The combination of these two amounts must be paid to each worker. Watch for possible zone differential, shift differential, and/or hazard pay. If the occupation lists different rates for different Areas of the state, locate the Area that includes the county where the project is located.

Apprentices must be paid consistent with their registered apprenticeship program standard. You can find apprenticeship rates on our website at https://www.oregon.gov/boli/employers/Pages/prevailing-wage-rates.aspx. You may also contact the agency to confirm the correct apprenticeship rate.

The "Prevailing Wage Rate Laws" handbook provides specific information and answers questions regarding prevailing wage laws and is available on our website at https://www.oregon.gov/boli/employers/Documents/2024%20PWR%20Law%20book%20-%20FINAL.pdf.

If you have any questions about any of this information, please contact the Bureau of Labor & Industries at PWR.Email@boli.oregon.gov or (971) 245-3844.

Prevailing Wage Rates by Occupations—Table of Contents

Using the booklet, Definitions of Covered Occupations, find the definition and group number, if applicable, that most closely matches the actual work being performed by the worker.

Asbestos Worker/Insulator 5
Boilermaker 5
Bricklayer/Stonemason 5
Bridge and Highway Carpenter (See Carpenter Group 5) 5
Carpenter 5
Cement Mason 6
Diver 7
Diver Tender 7
Dredger 7
Drywall, Lather, Acoustical Carpenter & Ceiling Installer 8
Drywall Taper (See Painter & Drywall Taper) 17
Electrician 9
Elevator Constructor, Installer and Mechanic 13
Fence Constructor (Non-Metal) 13
Fence Erector (Metal) 13
Flagger (Laborer Group 1) 14
Glazier 13
Hazardous Materials Handler 13
Highway/Parking Striper 13
Ironworker 14
Laborer 14
Landscape Laborer/Technician 15
Limited Energy Electrician 15
Line Constructor 17
Marble Setter 17
Millwright Group 1 (See Carpenter Group 3) 5
Painter & Drywall Taper 18
Piledriver (See Carpenter Group 6) 5
Plasterer and Stucco Mason 18
Plumber/Pipefitter/Steamfitter 18
Power Equipment Operator 19
Roofer 21
Sheet Metal Worker 22
Soft Floor Layer 24
Sprinkler Fitter 24
Tender to Mason Trades (Brick and Stonemason, Mortar Mixer, Hod Carrier) 24
Tender to Plasterer and Stucco Mason 25
Testing and Balancing (TAB) Technician 25
Tile Setter/Terrazzo Worker: Hard Tile Setter 25
Tile, Terrazzo, and Marble Finisher 25
Truck Driver 26

ASBESTOS WORKER/INSULATOR	**62.02**	**25.42**
Firestop Containment	**48.74**	**18.89**
BOILERMAKER	**43.83**	**32.22**
BRICKLAYER/STONEMASON	**49.60**	**25.92**

This trade is tended by "Tenders to Mason Trades."

Add $1.00 per hour to base rate for refractory repair work.

CARPENTER

Zone A (Base Rate)

Group 1	**54.69**	**16.81**
Group 2	**54.86**	**16.81**
Group 3 (Millwrights)	**61.57**	**22.38**
Group 4	**Eliminated**	
Group 5 (Bridge & Highway)	**56.06**	**16.81**
Group 6 (Piledrivers)	**56.06**	**16.81**

Zone Differential for Carpenters - Add to Zone A Base Rate

Zone B **1.25** per hour
Zone C **1.70** per hour
Zone D **2.00** per hour
Zone E **3.00** per hour
Zone F **5.00** per hour
Zone G **10.00** per hour

Zone A: Projects located within 30 miles of the respective city hall of the cities listed.
Zone B: More than 30 miles but less than 40 miles.
Zone C: More than 40 miles but less than 50 miles.
Zone D: More than 50 miles but less than 60 miles.
Zone E: More than 60 miles but less than 70 miles.
Zone F: More than 70 miles but less than 100 miles.
Zone G: More than 100 miles.

Reference Cities for Group 1 and 2 Carpenters

Albany	Coos Bay	Klamath Falls	Newport	Roseburg
Astoria	Eugene	La Grande	Ontario	Salem
Baker City	Goldendale	Lakeview	Pendleton	The Dalles
Bend	Grants Pass	Longview	Portland	Tillamook
Brookings	Hermiston	Madras	Port Orford	Vancouver
Burns	Hood River	Medford	Reedsport	

See more information on Reference Cities for Zone Differential and Premium Pays on page 6.

CARPENTER (continued)

Reference Cities for Group 3 Carpenters

Eugene	Medford	Portland	Vancouver
Longview	North Bend	The Dalles	

Reference Cities for Group 5 and 6 Carpenters

Bend	Longview	North Bend
Eugene	Medford	Portland

Note: All job or project locations shall be computed (determined) on the basis of road miles and in the following manner. A mileage measurement will start at the entrance to the respective city hall, facing the project (if possible), and shall proceed by the normal route (shortest time--best road via Google Maps) to the geographical center on the highway, railroad, and street construction projects (end of measurement). On all project contracts, the geographical center where the major portion of the construction is located, shall be considered the center of the project (end measurement).

Group 1, 2, 5, and 6:
Welders shall receive a 5% premium per hour based on their Group's journeyman wage rate, with an 8-hour minimum.

Group 1, 2, and 3:
When working with toxic treated wood, workers shall receive $.25/hour premium pay for minimum of eight (8) hours.

Group 5 and 6:
When working with creosote and other toxic treated wood, workers shall receive $.25/hour premium pay for minimum of eight (8) hours.

Group 6:
When working in sheet pile coffer dams or cells up to the external water level, workers shall receive $.15/hour premium pay for minimum of eight (8) hours.

CEMENT MASON
This trade is tended by "Concrete Laborer."

Group 1	**46.13**	**22.31**
Group 2	**47.09**	**22.31**
Group 3	**47.09**	**22.31**
Group 4	**48.05**	**22.31**

Zone Differential for Cement Mason - Add to Basic Hourly Rate

Zone A: **3.00** per hour
Zone B: **5.00** per hour
Zone C: **10.00** per hour

Zone A: Projects located 60-79 miles of the respective city hall of the Reference Cities listed below .
Zone B: Projects located 80-99 miles of the respective city hall of the Reference Cities listed below.
Zone C: Projects located 100 or more miles of the respective city hall of the Reference Cities listed below.

See more information on Reference Cities for Zone Differential on page 7.

CEMENT MASON (continued)

Reference Cities for Cement Mason

Bend	Eugene	Pendleton	Salem	Vancouver
Corvallis	Medford	Portland	The Dalles	

When a contractor takes employees to a project that is located more than 59 miles from the city hall of the Reference City that is closest to the contractor's place of business, Zone Pay is to be paid for the distance between the city hall of the identified Reference City and the project site.

Note: All miles are to be determined on the basis of road miles using the normal route (shortest time – best road), from the city hall of the Reference City closest to the contractor's place of business and the project.

DIVER & DIVER TENDER

Zone 1 (Base Rate)

DIVER	**108.33**	**20.40**
DIVER TENDER	**64.32**	**20.40**

Any Diver or Diver's Tender working on a project more than 50 miles from Portland, OR city hall shall receive forty dollars ($40.00) per day in addition to their regular pay. Miles are calculated via the "shortest route" filter using Google Maps from Portland, OR city hall or the employee's primary residence; whichever one is closer

Diver Depth Pay:

Depth Below Water Surface (FSW)	**Daily Depth Pay**
50-100 ft.	**2.00** per foot over 50 feet
101-150 ft.	**3.00** per foot over 100 feet
151-220 ft.	**4.00** per foot over 150 feet
Over 220 ft.	**5.00** per foot over 220 feet

The actual depth in FSW shall be used in determining depth premium.

Diver Enclosure Pay (working without vertical escape):

Distance Traveled in the Enclosure	**Daily Enclosure Pay**
0 – 25ft.	**N/C**
25 – 300 ft.	**1.00** per foot from the entrance
300 – 600 ft.	**1.50** per foot beginning at 300 ft.
Over 600 ft.	**2.00** per foot beginning at 600 ft.

DREDGER

Zone A (Base Rate)

Leverman (Hydraulic & Clamshell)	**58.75**	**16.95**
Assistant Engineer (Watch Engineer, Mechanic Machinist)	**55.59**	**16.95**
Tenderman (Boatman Attending Dredge Plant), Fireman	**54.10**	**16.95**
Fill Equipment Operator	**52.93**	**16.95**
Assistant Mate	**50.23**	**16.95**

See more information on Zone Differential on page 8.

DREDGER (continued)

Zone Differential for Dredgers – Add to Zone A Base Rate

Zone B: **3.00** per hour
Zone C: **6.00** per hour

Zone mileage based on road miles:

Zone A: Center of jobsite to no more than 30 miles from the **City Hall of Portland.**
Zone B: More than 30 miles but not more than 60 miles.
Zone C: Over 60 miles.

DRYWALL, LATHER, ACOUSTICAL CARPENTER & CEILING INSTALLER

1. DRYWALL INSTALLER	**54.49**	**17.01**
2. LATHER, ACOUSTICAL CARPENTER & CEILING INSTALLER	**54.49**	**17.01**

Zone Differential for Lather, Acoustical Carpenter & Ceiling Installer

Zone mileage based on road miles:

Zone B	61-80 miles	**6.00** per hour
Zone C	81-100 miles	**9.00** per hour
Zone D	101 or more	**12.00** per hour

The correct transportation allowance shall be based on AAA road mileage from the City Hall of the transportation reference cities listed herein.

Reference Cities for Drywall, Lather, Acoustical Carpenter & Ceiling Installer

Albany	Bend	Grants Pass	Medford	Portland	Seaside
Astoria	Brookings	Hermiston	Newport	Reedsport	The Dalles
Baker	Coquille	Klamath Falls	North Bend	Roseburg	Tillamook
Bandon	Eugene	Kelso-Longview	Pendleton	Salem	Vancouver

Certified welders shall receive 5% over the base wage rate, with an eight (8) hour minimum.

ELECTRICIAN

Electrician/Limited Energy Electrician Area Map

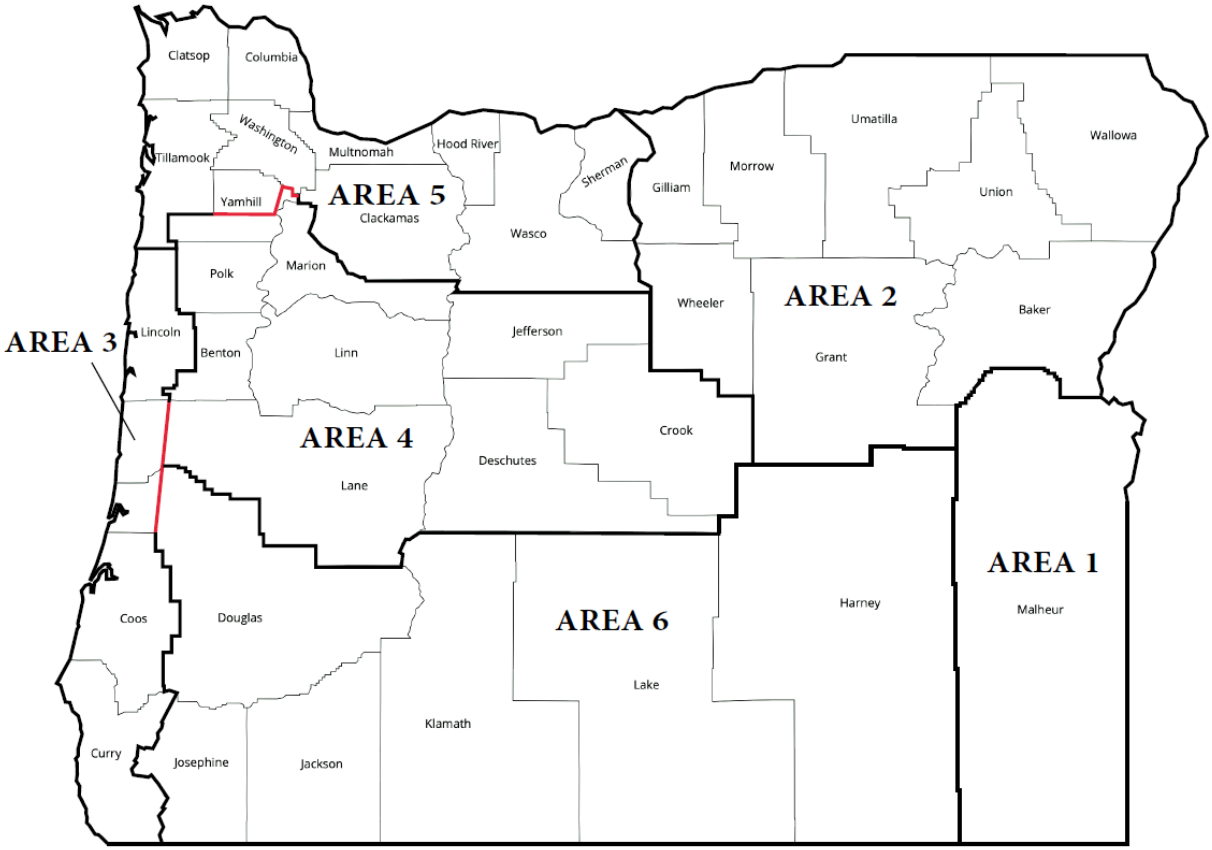

Note: If you are unable to determine the area of a project located on or near the cross-county boundaries marked in red on the map, call or email the BOLI Prevailing Wage Rate Coordinator at (971) 245-3844 or PWR.email@boli.oregon.gov.

Area 1

Electrician	**42.40**	**20.14**
Wireman Welder/Cable Splicer	**46.64**	**20.40**

Reference County

Malheur

Shift Differential*

1st Shift "day":	Between the hours of 8:00am and 4:30pm	– 8 hours pay for 8 hours work
2nd Shift "swing":	Between the hours of 4:30pm and 1:00am	– 8 hours pay for 8 hours work plus 10% for all hours worked
3rd Shift "graveyard":	Between the hours of 12:30am and 9:00am	– 8 hours pay for 8 hours work plus 15% for all hours worked.

* The Employer shall be permitted to adjust the starting hours of the shift by up to two (2) hours.

Work will be paid at time and one half the regular rate: (1) When workmen are under compressed air or where gas masks are required; (2) When working tunnels or shafts where danger of falling rocks or other debris exists; and (3) When working from suspended or swinging scaffolds or boson's chairs.

ELECTRICIAN (continued)

Area 2

Electrician	**58.00**	**25.92**
Cable Splicer	**60.90**	**26.01**
Certified Welder	**72.50**	**26.36**
Material Handler	**34.80**	**19.32**

Reference Counties

Baker	Grant	Umatilla	Wallowa
Gilliam	Morrow	Union	Wheeler

Add 50% of the base rate when workers are required to work under the following conditions:

1) Under compressed air with atmospheric pressure exceeding normal pressure by at least 10%.

2) From trusses, swing scaffolds, bosun's chairs, open platforms, unguarded scaffolds, open ladders, frames, tanks, stacks, silos and towers where the workman is subject to a direct fall of (a) more than 60 feet or (b) into turbulent water under bridges, powerhouses or spillway faces of dams.

Area 3

Electrician	**51.76**	**26.90**

Reference Counties

Coos	Douglas (a)	Lincoln
Curry	Lane (a)	

(a) Those portions of Lane and Douglas counties lying **west** of the red line on the Electrician Area Map posted above.

Shift Differential*

1st Shift "day":	Between the hours of 8:00am and 4:30pm	–	8 hours pay for 8 hours work
2nd Shift "swing":	Between the hours of 4:30pm and 1:00am	–	8 hours pay for 8 hours work plus 17% for all hours worked
3rd Shift "graveyard":	Between the hours of 12:30am and 9:00am	–	8 hours pay for 8 hours work plus 31% for all hours worked.

***** The Employer shall be permitted to adjust the starting hours of the shift by up to two (2) hours.

When workers are required to work under compressed air or where gas masks are required, or to work from trusses, all scaffolds including mobile elevated platforms, any temporary structure, bosun's chair or on frames, stacks, towers, tanks, within 15' of the leading edges of any building at a distance of:

50 – 75 feet to the ground	Add 1 ½ x the base rate
75+ feet to the ground	Add 2 x the base rate

High Time is not required to be paid on any permanent structure with permanent adequate safeguards (handrails, mid-rails, and toe guards). Any vehicle equipped with outriggers are exempted from this section.

ELECTRICIAN (continued)

Area 4

Electrician	**57.65**	**24.86**
Cable Splicer	**63.42**	**25.03**
Lighting Maintenance/Material Handler	**27.76**	**10.73**

Reference Counties for Area 4

Benton	Jefferson	Marion
Crook	Lane (b)	Polk
Deschutes	Linn	Yamhill (c)

(b) Those portions of Lane and Douglas counties lying **east** of the red line on the Electrician Area Map posted above.

(c) The portion of Yamhill county lying **south** of the red line on the Electrician Area Map posted above.

Shift Differential*

1st Shift "day"	Between the hours of 8:00am and 4:30pm –	8 hours pay for 8 hours work
2nd Shift "swing"	Between the hours of 4:30pm and 1:00am –	8 hours pay for 8 hours work plus 17% for all hours worked
3rd Shift "graveyard"	Between the hours of 12:30am and 9:00am –	8 hours pay for 8 hours work plus 31.4% for all hours worked.

***** The Employer shall be permitted to adjust the starting hours of the shift by up to two (2) hours.

Area 5

Electrician	**63.50**	**31.98**
Electrical Welder	**69.85**	**32.17**
Material Handler/Lighting Maintenance	**36.20**	**21.97**

Reference Counties

Clackamas	Hood River	Tillamook	Yamhill (d)
Clatsop	Multnomah	Wasco	
Columbia	Sherman	Washington	

(d) The portion of Yamhill county lying **north** of the red line on the Electrician Area Map posted above.

Shift Differential*****

1st Shift "day"	Between the hours of 7:00am and 5:30pm –	8 hours pay for 8 hours work
2nd Shift "swing"	Between the hours of 4:30pm and 3:00am –	8 hours pay for 8 hours work plus 17.3% for all hours worked
3rd Shift "graveyard"	Between the hours of 12:30am and 11:00am –	8 hours pay for 8 hours work plus 31.4% for all hours worked.

***** The Employer shall be permitted to adjust the starting hours of the shift by up to two (2) hours.

See more information about Zone Pay on page 12.

ELECTRICIAN (continued)

Zone Pay for Area 5 – **Electrician and Electrical Welder** – Add to Basic Hourly Rate

Zone mileage based on air miles:

Zone 1: 31-50 miles – **1.50** per hour
Zone 2: 51-70 miles – **3.50** per hour
Zone 3: 71-90 miles – **5.50** per hour
Zone 4: Beyond 90 – **9.00** per hour

There shall be a 30-mile free zone from downtown Portland City Hall and a similar 15-mile free zone around the following cities:

Astoria	Seaside	Tillamook
Hood River	The Dalles	

Further, the free zone at the Oregon coast shall extend along Hwy 101 west to the ocean Hwy 101 east 10 miles if not already covered by the above 15-mile free zone.

When workers are performing electrical work on a structure at or above the 90 ft. level directly above the ground, floor, roadway, roof or water where scaffolding or special safety devices which have not been approved by the Occupational Safety and Health Administration are used, the wage rate for such work shall be double the straight time hourly rate.

Area 6

Electrician	**45.58**	**20.70**
Lighting Maintenance and Material Handler	**22.84**	**10.59**

Reference Counties

Douglas (e)	Jackson	Klamath
Harney	Josephine	Lake

(e) The portion of Douglas county lying **east** of the red line on the Electrician Area Map posted above.

Shift Differential*

1st Shift "day"	Between the hours of 8:00am and 4:30pm	–	8 hours pay for 8 hours work
2nd Shift "swing"	Between the hours of 4:30pm and 1:00am	–	8 hours pay for 8 hours work plus 7.5% for all hours worked
3rd Shift "graveyard"	Between the hours of 12:30am and 9:00am	–	8 hours pay for 8 hours work plus 15% for all hours worked.

***** The Employer shall be permitted to adjust the starting hours of the shift by up to two (2) hours.

When workers are required to work under compressed air or to work from trusses, scaffolds, swinging scaffolds, bosun's chair or on building frames, stacks or towers at a distance, the following should be added to base rate.

50 – 90 feet to the ground: Add 1 ½ x the base rate
90+ feet to the ground: Add 2 x the base rate

When such work is performed outside of the regularly scheduled working hours, workmen shall be paid three (3) times the regular rate of pay. An assignment of work referred to in this Section shall entitle the workman to the premium rate for a period of at least two (2) hours.

ELEVATOR CONSTRUCTOR, INSTALLER AND MECHANIC

Area 1

Mechanic	**67.61**	**43.84**

Reference Counties

Baker Union Wallowa

Umatilla – **See Area 2 rate**

Area 2

Mechanic	**67.89**	**43.87**

Reference Counties

Benton	Deschutes	Jefferson	Malheur	Umatilla
Clackamas	Douglas	Josephine	Marion	Wasco
Clatsop	Gilliam	Klamath	Morrow	Washington
Columbia	Grant	Lake	Multnomah	Wheeler
Coos	Harney	Lane	Polk	Yamhill
Crook	Hood River	Lincoln	Sherman	
Curry	Jackson	Linn	Tillamook	

FENCE CONSTRUCTOR (NON-METAL)	**41.10**	**18.30**
FENCE ERECTOR (METAL)	**41.10**	**18.30**
GLAZIER	**53.15**	**23.31**

Add $1.00 to base rate when employee works from a swing stage, scaffold, suspended contrivance or mechanical apparatus from the third floor up or thirty feet of free fall (whichever is less), and employee is required to wear a safety belt.

Add twenty percent (20%) to base rate when employee works from a bosun chair (non-motorized single-man apparatus), regardless of height.

Certified welders shall receive twenty percent (20%) above the base rate for actual time spent performing welding duties.

HAZARDOUS MATERIALS HANDLER	**31.03**	**18.18**
HIGHWAY/PARKING STRIPER	**71.89**	**19.50**

IRONWORKER

Zone 1 (Base Rate):	**46.82**	**33.98**

Zone Differential for Ironworker – Add to Basic Hourly Rate

Zone 2: **6.88/**hr. or $55.00 maximum per day
Zone 3: **10.00**/hr. or $80.00 maximum per day
Zone 4: **12.50/**hr. or $100.00 maximum per day

Zone 1: Projects located within 45 miles of city hall in the reference cities listed below.
Zone 2: More than 46 miles, but less than 60 miles.
Zone 3: More than 61 miles, but less than 100 miles.
Zone 4: More than 100 miles.

Note: Zone pay for Ironworkers shall be determined using the quickest route per Google Maps and computed from the city hall or dispatch center of the reference cities listed below **or** the residence of the employee, whichever is nearer to the project.

Reference Cities and Dispatch Center

Portland

LABORER

Zone A (Base Rate):

Group 1 (Includes Flagger)	**41.10**	**18.30**
Group 2	**42.47**	**18.30**
Group 3	**43.00**	**18.30**
Group 4	**36.13**	**18.30**
Group 5 (Landscape Laborer)	**29.42**	**18.30**

Zone Differential for Laborers Add to Zone A Base Rate

Zone B: **.85** per hour
Zone C: **1.25** per hour
Zone D: **2.00** per hour
Zone E: **4.00** per hour
Zone F: **5.00** per hour

Zone A: Projects located within 30 miles of city hall in the reference cities listed.
Zone B: More than 30 miles but less than 40 miles.
Zone C: More than 40 miles but less than 50 miles.
Zone D: More than 50 miles but less than 80 miles.
Zone E: More than 80 miles but less than 100 miles.
Zone F: More than 100 miles.

Reference Cities for Laborer

Albany	Burns	Hermiston	Roseburg
Astoria	Coos Bay	Klamath Falls	Salem
Baker City	Eugene	Medford	The Dalles
Bend	Grants Pass	Portland	

See more information on Zone Differential and Live Sewer Pay on page 15.

LABORER (Continued)

Note: All job or project locations shall be computed (determined) on the basis of road miles and in the following manner. A mileage measurement will start at the entrance to the respective city hall, facing the project (if possible), and shall proceed by the normal route (shortest time, best road) to the geographical center on the highway, railroad, and street construction projects (end of measurement). On all other project contracts, the geographical center where the major portion of the construction is located, shall be considered the center of the project (end measurement).

Any Laborer working in Live Sewers shall receive forty dollars ($40) per day in addition to their regular pay.

LANDSCAPE LABORER/TECHNICIAN (Laborer Group 5) **See Laborer Group 5 Rate**

LIMITED ENERGY ELECTRICIAN

Electrician/Limited Energy Electrician Area Map

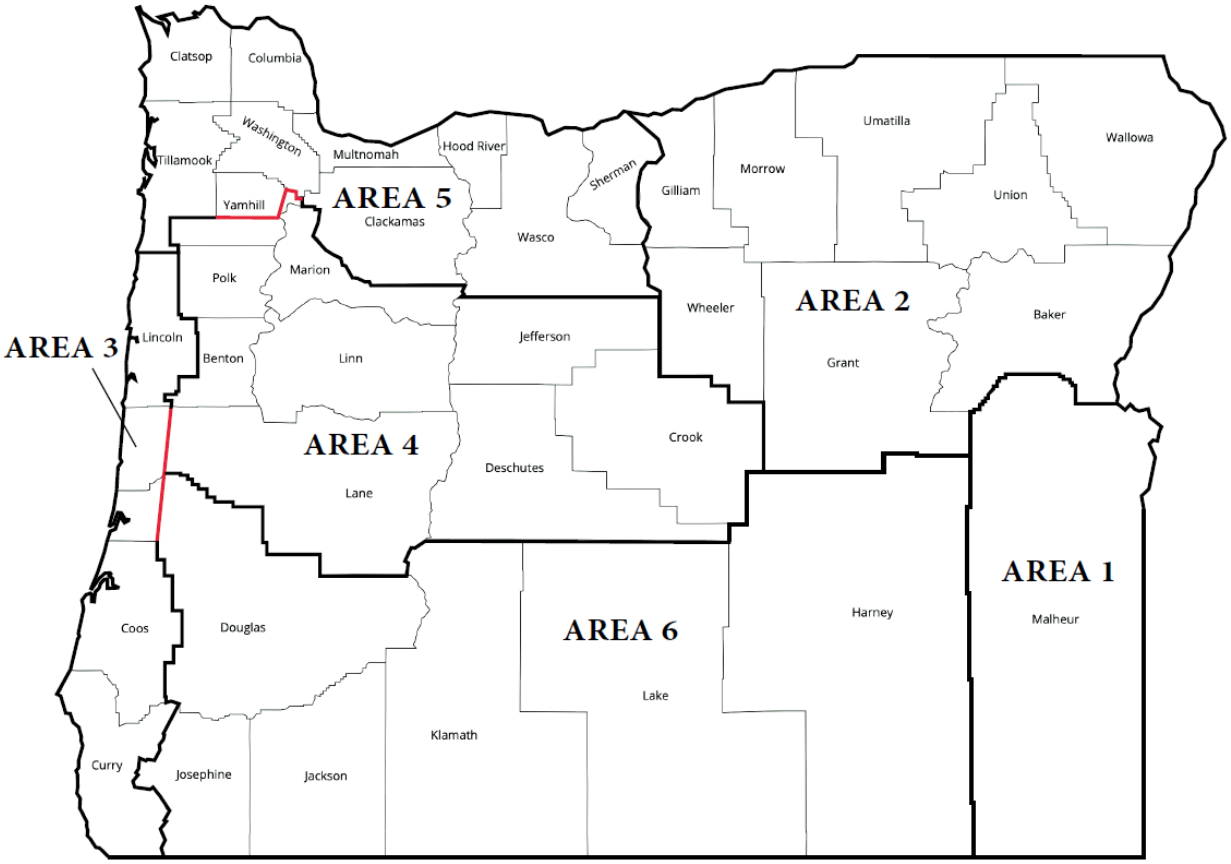

Note: If you are unable to determine the area of a project located on or near the cross-county boundaries marked in red on the map, call or email the BOLI Prevailing Wage Rate Coordinator at (971) 245-3844 or PWR.email@boli.oregon.gov.

Area 1	**37.90**	**16.80**
Reference County		
Malheur		

LIMITED ENERGY ELECTRICIAN (continued)

Area 2	**37.97**	**18.44**

Reference Counties

Baker	Grant	Umatilla	Wallowa
Gilliam	Morrow	Union	Wheeler

Area 3	**41.93**	**24.17**

Reference Counties

Coos	Douglas (a)	Lincoln
Curry	Lane (a)	

(a) Those portions of Lane and Douglas counties lying **west** of the red line on the Electrician Area Map posted above

Area 4	**42.98**	**19.40**

Reference Counties

Benton	Jefferson	Marion
Crook	Lane (b)	Polk
Deschutes	Linn	Yamhill (c)

(b) Those portions of Lane and Douglas counties lying **east** of the red line on the Electrician Area Map posted above.

(c) The portion of Yamhill county lying **south** of the red line on the Electrician Area Map posted above.

Area 5	**52.12**	**26.76**

Reference Counties

Clackamas	Hood River	Tillamook	Yamhill (d)
Clatsop	Multnomah	Wasco	
Columbia	Sherman	Washington	

(d) The portion of Yamhill county lying **north** of the red line on the Electrician Area Map posted above.

Area 6	**35.49**	**17.99**

Reference Counties

Douglas (e)	Jackson	Klamath
Harney	Josephine	Lake

(e) The portion of Douglas county lying **east** of the red line on the Electrician Area Map posted above.

LINE CONSTRUCTOR

Area 1 (All Regions)

Group 1	**75.47**	**27.15**
Group 2	**67.38**	**26.78**
Group 3	**41.12**	**17.94**
Group 4	**57.95**	**23.16**
Group 5	**50.54**	**19.42**
Group 6	**40.43**	**18.97**
Group 7	**22.84**	**14.16**

Reference Counties

All counties

Pursuant to ORS 279C.815(2)(b), the Line Constructor Area 1 rate is the highest rate of wage among the collective bargaining agreements for Line Constructor Area 1 and Area 2.

MARBLE SETTER	**50.60**	**25.92**

This trade is tendered by "Tile, Terrazzo, & Marble Finishers." Add $1.00 per hour to base rate for refractory repair work.

PAINTER & DRYWALL TAPER

COMMERCIAL PAINTING	**37.74**	**16.82**
INDUSTRIAL PAINTING	**39.94**	**16.82**
BRIDGE PAINTING	**46.83**	**16.82**

Shift Differential for Painter
Add $2.00/hour to base rate for entire shift if any hours are worked outside of 5:00 a.m. to 5:00 p.m.

DRYWALL TAPER Zone A (Base Rate)	**48.02**	**21.53**

Zone Differential for Drywall Taper – Add to Zone A Base Rate

Zone B: **6.00** per hour
Zone C: **9.00** per hour
Zone D: **12.00** per hour

Zone A: Projects located less than 61 miles from the respective city hall of the dispatch cities listed.
Zone B: Projects located 61 miles to 80 miles.
Zone C: Projects located 81 miles to 100 miles.
Zone D: Projects located 101 miles or more.

See more information on Dispatch Cities for Zone Differential on page 18.

PAINTER & DRYWALL TAPER (continued)

Dispatch Cities for Drywall Taper

Albany	Bend	Grants Pass	Medford	Portland	Seaside
Astoria	Brookings	Hermiston	Newport	Reedsport	The Dalles
Baker	Coquille	Klamath Falls	North Bend	Roseburg	Tillamook
Bandon	Eugene	Kelso-Longview	Pendleton	Salem	Vancouver

Note: Zone pay is based on AAA Road Mileage.

PLASTERER AND STUCCO MASON

This trade is tended by "Tenders to Plasterers."

Zone A (Base Rate)	**44.61**	**19.63**

Zone Differential for Plasterer and Stucco Mason – Add to Zone A Base Rate

Zone B: **6.00** per hour
Zone C: **9.00** per hour
Zone D: **12.00** per hour

Zone A: Projects located less than 61 miles from the respective city hall of the reference cities listed below.
Zone B: Projects located 61 miles to 80 miles.
Zone C: Projects located 81 miles to 100 miles.
Zone D: Projects located 101 miles or more.

Reference Cities for Plasterer & Stucco Mason

Bend	Eugene	Medford	Portland	Seaside
Coos Bay	La Grande	Newport	Salem	The Dalles

Add $1.00 to base rate for swinging scaffold work.

Add $2.00 to base rate for nozzle technicians on plastering machines.

PLUMBER/PIPEFITTER/STEAMFITTER

Area 1	**-------**	**-------**

Reference Counties

Harney – **See Area 3 rates** Malheur – **See Area 3 rates**

Baker – **See Area 2 rates**

Area 2	**65.20**	**34.91**

Reference Counties

Baker	Morrow	Wallowa
Gilliam	Union	Wheeler
Grant	Umatilla	

See more information about Zone Pay on page 19

PLUMBER/PIPEFITTER/STEAMFITTER (continued)

Zone Differential for Area 2 – Add to Base Rate
Zone 2: **10.62/**hr. not to exceed $80.00 day.

Zone mileage based on road miles:
Zone 2: Eighty (80) miles or more from City Hall in Pasco, Washington.

Add $1.00 to base rate in one-hour minimum increments if it is possible for worker to fall 35 ft. or more.

Add $1.00 to base rate in one-hour minimum increments if worker is required to wear a mask in hazardous areas.

Area 3	**60.77**	**37.10**

Reference Counties

Benton	Deschutes	Klamath	Multnomah
Clackamas	Douglas	Lake	Polk
Clatsop	Harney	Lane	Sherman
Columbia	Hood River	Lincoln	Tillamook
Coos	Jackson	Linn	Wasco
Crook	Jefferson	Malheur	Washington
Curry	Josephine	Marion	Yamhill

Gilliam – **See Area 2 rates** Grant – **See Area 2 rates** Morrow – **See Area 2 rates**
Umatilla – **See Area 2 rates** Wheeler – **See Area 2 rates**

POWER EQUIPMENT OPERATOR

POWER EQUIPMENT OPERATOR MAP

POWER EQUIPMENT OPERATOR (continued)

Zone 1 (Base Rate)

Group 1	**58.94**	**17.15**
Group 1A	**61.10**	**17.15**
Group 1B	**63.26**	**17.15**
Group 2	**57.03**	**17.15**
Group 3	**55.88**	**17.15**
Group 4	**52.55**	**17.15**
Group 5	**51.31**	**17.15**
Group 6	**48.09**	**17.15**

Zone Pay Differential for Power Equipment Operator – Add to Zone 1 Base Rate
Zone 2: **3.00** per hour
Zone 3: **6.00** per hour

For projects in the following metropolitan counties:

Clackamas	Marion	Washington
Columbia	Multnomah	Yamhill

(A) All jobs or projects located in Multnomah, Clackamas and Marion counties, West of the western boundary of Mt. Hood National Forest and West of Mile Post 30 on Interstate 84 and West of Mile Post 30 on State Hwy 26 and West of Mile Post 30 on Hwy 22 and all jobs located in Yamhill County, Washington County and Columbia County shall receive Zone 1 pay for all classifications.

(B) All jobs or projects located in the area outside the *identified boundary* above, but less than 50 miles from Portland City Hall shall receive Zone 2 pay for all classifications.

(C) All jobs or projects located more than 50 miles from Portland City Hall, but outside the identified border above, shall receive Zone 3 pay for all classifications.

Reference cities for projects in all remaining counties:

Albany	Coos Bay	Grants Pass	Medford
Bend	Eugene	Klamath Falls	Roseburg

(A) All jobs or projects located within 30 miles of the respective city hall of the above mentioned cities shall receive Zone 1 pay for all classifications.

(B) All jobs or projects located more than 30 miles and less than 50 miles from the respective city hall of the above mentioned cities shall receive Zone 2 for all classifications.

(C) All jobs or projects located more than 50 miles from the respective city hall of the above mentioned cities shall receive Zone 3 pay for all classifications.

Note: All job or project locations shall be computed (determined) on the basis of road miles and in the following manner. A mileage measurement will start at the entrance to the respective city hall, facing the project (if possible), and shall proceed by the normal route (shortest time-best road) to the geographical center on the highway, railroad, and street construction projects (end of measurement). On all other project contracts, the geographical center where the major portion of the construction is located, shall be considered the center of the project (end measurement).

See more information on Hazard Pay and Shift Differential calculation on page 21.

POWER EQUIPMENT OPERATOR (continued)

Add $10.00/hour hyperbaric pay for Group 4 Tunnel Boring Machine Mechanic.

Add $0.40 to the base rate for any and all work performed underground, including operating, servicing and repairing of equipment.

Add $0.50 to the base rate per hour for any employee who works suspended by a rope or cable.

Add $0.50 to the base rate for employees who do “pioneer” work (break open a cut, build road, etc.) more than one hundred fifty (150) feet above grade elevation.

Note: A Hazardous Waste Removal Differential must be added to the base rate if work is performed inside the boundary of a Federally Designated Waste Site. For information on this differential, call the Prevailing Wage Rate Coordinator at (971) 245-3844.

Shift Differential

Two-Shift Operations:

On a two-shift operation, when the second shift starts after 4:30 p.m., second-shift workers shall be paid the base hourly wage rate plus 5% for all hours worked.

When the second shift starts at 8:00 p.m. or later, the second-shift workers shall be paid at the base hourly wage rate plus 10% for all hours worked.

Three-Shift Operations:

On a three-shift operation, the base hourly wage rate plus five percent (5%) shall be paid to all second-shift workers for all hours worked, and the base hourly wage rate plus ten percent (10%) shall be paid to all third shift workers for all hours worked.

ROOFER

Area 1	**44.51**	**22.70**

Reference Counties

Baker	Deschutes	Morrow	Union
Clackamas	Gilliam	Multnomah	Wasco
Clatsop	Grant	Sherman	Wallowa
Columbia	Hood River	Tillamook	Washington
Crook	Jefferson	Umatilla	Wheeler

Add 10% to the base rate for handling coal tar pitch or coal tar-based materials.

Add 10% to the base rate for handling fiberglass insulation.

ROOFER (continued)

Area 2 **40.15** **18.97**

Reference Counties

Benton	Harney	Lake	Malheur
Coos	Jackson	Lane	Marion
Curry	Josephine	Lincoln	Polk
Douglas	Klamath	Linn	Yamhill

Crook – **See Area 1 rates** Deschutes – **See Area 1 rates**

Application, spudding and cutting or removal of coal tar products 10%over basic wage scale.

Application, spudding and cutting fiberglass insulation add a 10% over the basic wage scale.

Area 4 **44.51** **22.70**

Reference County

Umatilla Union Wallowa

Add 10% to the base rate for handling coal tar pitch or coal tar-based materials.

Add 10% to the base rate for handling fiberglass insulation.

Pursuant to ORS 279C.815(2)(b), the Roofer Area 1 rate is the highest rate of wage among the collective bargaining agreements for Roofer Areas 1, 4 and 5.

Area 5 **44.51** **22.70**

Reference County

Morrow

Add 10% to the base rate for handling coal tar pitch or coal tar-based materials. Add 10% to the base rate for handling fiberglass insulation.

Pursuant to ORS 279C.815(2)(b), the Roofer Area 1 rate is the highest rate of wage among the collective bargaining agreements for Roofer Areas 1, 4 and 5.

SHEET METAL WORKER

Area 1 **56.24** **32.77**

Reference Counties

Benton	Deschutes	Lincoln	Polk	Washington
Clackamas	Gilliam	Linn	Sherman	Wheeler
Clatsop	Grant	Marion	Tillamook	Yamhill
Columbia	Hood River	Morrow	Umatilla	
Crook	Jefferson	Multnomah	Wasco	

See more information on Shift Differential calculation and Hazard Pay on page 23.

SHEET METAL WORKER (Continued)

Swing Shift Operations:

When a second (or "swing") shift starts between 2:00pm -7:00pm, second-shift workers shall be paid the base hourly wage rate plus $8.25 for all hours worked.

Graveyard Shift Operations:

When the second (or "graveyard") shift starts between 7:00pm – 1:00am, second-shift workers shall be paid the base hourly wage rate plus $12.65 for all hours worked.

Add 10% to base rate for work performed on any swinging platform, swinging chair or swinging ladder.

Add 10% to base rate for work where a worker is exposed to resins, chemicals, or acid.

Area 2	-------	-------

Reference Counties

Baker – **See Area 3 rate** Malheur – **See Area 4 rate**

Area 3	**50.00**	**28.37**

Reference Counties

Baker Union Wallowa

Morrow – **See Area 1 rate** Umatilla – **See Area 1 rate**

Add $.45 to base rate for work performed on any swinging stage, swinging scaffold or boson chair in excess of thirty (30) feet above the ground.

Add $1.00 to base rate for work where it is necessary to wear a chemically activated type face mask.

Area 4	**45.14**	**30.45**

Reference Counties

Douglas Jackson Klamath Lane
Harney Josephine Lake Malheur

Coos – **See Area 5 rate** Curry – **See Area 5 rate**

Swing Shift Operations:

When a second (or "swing") shift starts between 2:00pm -7:00pm, second-shift workers shall be paid the base hourly wage rate plus $6.76 for all hours worked.

Graveyard Shift Operations:

When the second (or "graveyard") shift starts between 7:00pm – 1:00am, second-shift workers shall be paid the base hourly wage rate plus $10.37 for all hours worked.

Add 10% to base rate for work performed on any swinging platform, swinging chair or swinging ladder.

Add 10% to base rate for work where a worker is exposed to resins, chemicals, or acid.

SHEET METAL WORKER (Continued)

Area 5	**45.45**	**31.54**

Reference Counties

Coos Curry

Swing Shift Operations:

When a second (or "swing") shift starts between 2:00pm -7:00pm, second-shift workers shall be paid the base hourly wage rate plus $6.81 for all hours worked.

Graveyard Shift Operations:

When the second (or "graveyard") shift starts between 7:00pm – 1:00am, second-shift workers shall be paid the base hourly wage rate plus $10.44 for all hours worked.

Add 10% to base rate for work performed on any swinging platform, swinging chair or swinging ladder. Add 10% to base rate for work where a worker is exposed to resins, chemicals, or acid.

SOFT FLOOR LAYER	**44.28**	**19.17**

SPRINKLER FITTER

Area 1	**51.65**	**27.57**

Reference Counties

Benton	Deschutes	Jefferson	Malheur	Umatilla
Clackamas	Douglas	Josephine	Marion	Wasco
Clatsop	Gilliam	Klamath	Morrow	Washington
Columbia	Grant	Lake	Multnomah	Wheeler
Coos	Harney	Lane	Polk	Yamhill
Crook	Hood River	Lincoln	Sherman	
Curry	Jackson	Linn	Tillamook	

Area 2	**44.40**	**27.56**

Reference Counties

Baker Union Wallowa

Gilliam – **See Area 1 rate** Malheur – **See Area 1 rate** Umatilla – **See Area 1 rate**
Grant – **See Area 1 rate** Morrow – **See Area 1 rate**

TENDER TO MASON TRADES (Brick and Stonemason, Mortar Mixer, Hod Carrier)	**45.79**	**17.80**

Add $0.50 to base rate for refractory repair work.

TENDER TO PLASTERER AND STUCCO MASON

Zone A (Base Rate)	**44.79**	**18.30**

Zone Differential for Tender to Plasterer and Stucco Mason – Add to Zone A Base Rate

Zone B: **6.00** per hour
Zone C: **9.00** per hour
Zone D: **12.00** per hour

Zone A: Projects located within 60 miles of city hall in the reference cities listed.
Zone B: More than 61 miles but less than 80 miles.
Zone C: More than 81 miles but less than 100 miles.
Zone D: More than 101 miles

Reference Cities

Bend	Eugene	Medford	Portland	Seaside
Coos Bay	La Grande	Newport	Salem	The Dalles

Add $0.50 to base rate for refractory repair work.

TESTING AND BALANCING (TAB) TECHNICIAN

For work performed under the Sheet Metal classification, including Air-Handling Equipment, Ductwork

See SHEET METAL WORKER RATE

For work performed under the Plumber/Pipefitter/Steamfitter classification, including Water Distribution Systems

See PLUMBER/PIPEFITTER/STEAMFITTER RATE

TILE SETTER/TERRAZZO WORKER: Hard Tile Setter	**43.93**	**22.51**

This trade is tended by “Tile, Terrazzo, & Marble Finisher.” Add $2.00 when performing terrazzo work.

Add $1.00 when working with epoxy, furnane, or alkor acetylene.

TILE, TERRAZZO, AND MARBLE FINISHER

1. TILE, TERRAZZO FINISHER	**32.68**	**16.93**

Add $2.00 when performing terrazzo work.

Add $1.00 when working with epoxy, furnane, or alkor acetylene.

2. BRICK & MARBLE FINISHER	**32.68**	**17.06**

Add $1.00 per hour to base rate for refractory repair work.

TRUCK DRIVER

Zone A (Base Rate)

Group 1	**35.41**	**18.30**
Group 2	**35.57**	**18.30**
Group 3	**35.74**	**18.30**
Group 4	**36.08**	**18.30**
Group 5	**36.35**	**18.30**
Group 6	**36.57**	**18.30**
Group 7	**36.82**	**18.30**

Zone Differential for Truck Drivers – Add to Zone A Base Rate

Zone B: **.65** per hour
Zone C: **1.15** per hour
Zone D: **1.70** per hour
Zone E: **2.75** per hour

Zone A: Projects within 30 miles of the cities listed.
Zone B: More than 30 miles but less than 40 miles.
Zone C: More than 40 miles but less than 50 miles.
Zone D: More than 50 miles but less than 80 miles.
Zone E: More than 80 miles.

Reference Cities

Albany	Burns	Hermiston	Madras	Pendleton	The Dalles
Astoria	Coos Bay	Hood River	Medford	Portland	Tillamook
Baker	Corvallis	Klamath Falls	McMinnville	Port Orford	Vancouver
Bend	Eugene	La Grande	Newport	Reedsport	
Bingen	Goldendale	Lakeview	Ontario	Roseburg	
Brookings	Grants Pass	Longview	Oregon City	Salem	

Note: All job or project locations shall be computed (determined) on the basis of road miles and in the following manner. A mileage measurement will start at the entrance to the respective city hall, facing the project (if possible), and shall proceed by the normal route (shortest time-best road) to the geographical center on the highway, railroad, and street construction projects (end of measurement). On all other project contracts, the geographical center where the major portion of the construction is located, shall be considered the center of the project (end measurement).

LIST OF CONTRACTORS INELIGIBLE
TO RECEIVE PUBLIC WORKS CONTRACTS
PUBLICATION DATE: JULY 5, 2025

To: All Oregon Contracting Agencies

Pursuant to ORS 279C.860, contractors on this list are ineligible to receive public works contracts subject to the Prevailing Wage Rate Law. These contractors and subcontractors, as well as any firm, corporation, partnership or association in which the contractor or subcontractor has a financial interest are ineligible to receive public works contracts until removed from this list. You can find the most current and up to date list of contractors ineligible to receive public works contracts on our website at https://www.oregon.gov/boli/employers/Pages/pwr-ineligible-contractors.aspx.

If you have questions regarding the list or for the most current information regarding persons ineligible to receive prevailing wage contracts, please contact the Prevailing Wage Rate Coordinator in Portland at (971) 245-3844.

Contractor	Address	Date placed	Removal date
A1 Dumptruck Services LLC	703 N Hayden Meadows Dr., #206 Portland, OR 97213 731 N Hayden Meadows Dr., #206 Portland, OR 97217 2408 NE 164th Avenue Vancouver, WA 98684	2/24/2020	2/23/2027
Alan Tatom	168 Clearwater Avenue NE Salem, OR 97301	7/10/2015	7/9/2025
Cameron Creations, Steven Cameron, Nancy Cameron *	PO Box 2 Lowell, OR 97452	5/25/2000	
David Miller *	731 NW Naito Parkway, #215 Portland, OR 97209	6/17/2020	
Eugene Graeme	169 SE Cody Lane Madras, OR 97741	7/3/2017	7/2/2027
Lisa Hoang aka Kim Lien Hoang aka Lien Kim Hoang aka Kim Hope aka Lisa K Ryan aka Ryan Lien Hoang aka Kim L Hoang aka Lien Hoang Ryan aka Lien K Hoang-Ryan aka Hoang K Lien aka Lisa Hall aka Lisa Kim Ryan aka Lien Ryan aka Lien Hoang Ryan aka Kim Hoang Lien aka K Lisa Hoang	703 N Hayden Meadows Dr., #206 Portland, OR 97213 731 N Hayden Meadows Dr., #206 Portland, OR 97217 2408 NE 164th Avenue Vancouver, WA 98684	2/24/2020	2/23/2027
NW Flagging LLC	703 N Hayden Meadows Dr., #206 Portland, OR 97213 731 N Hayden Meadows Dr., #206 Portland, OR 97217 2408 NE 164th Avenue Vancouver, WA 98684	2/24/2020	2/23/2027

LIST OF CONTRACTORS INELIGIBLE
TO RECEIVE PUBLIC WORKS CONTRACTS
PUBLICATION DATE: JULY 5, 2025

Contractor	Address	Date placed	Removal date
Oregon Building & Landscaping Services LLC	703 N Hayden Meadows Dr., #206 Portland, OR 97213 731 N Hayden Meadows Dr., #206 Portland, OR 97217 2408 NE 164th Avenue Vancouver, WA 98684	2/24/2020	2/23/2027
Pacific NW Drywall & Acoustics LLC aka Pacific NW Drywall& Acoustics LLC*	731 NW Natio Parkway #215 Portland, OR 97209	6/17/2020	
Phillip Walker	580 Market Street NE Salem, OR 97301	7/10/2015	7/9/2025
Regional Traffic Management LLC	703 N Hayden Meadows Dr., #206 Portland, OR 97213 731 N Hayden Meadows Dr., #206 Portland, OR 97217 2408 NE 164th Avenue Vancouver, WA 98684	2/24/2020	2/23/2027
Sang In Nam dba Cornerstone Janitorial Services*	130 NE Danbury Ave Hillsboro, OR 97124	9/20/2016	
WCI Construction LLC	169 SE Cody Lane Madras, OR 97741	7/3/2017	7/2/2027
WWJD Traffic Control, Inc.	168 Clearwater Avenue NE Salem, OR 97301	7/10/2015	7/9/2025

*** Not to be removed from debarment.**

Prevailing Wage Rate Laws Handbook

The 2024 edition of the ***Prevailing Wage Rate Laws Handbook*** is now available on our website at https://www.oregon.gov/boli/employers/Pages/prevailing-wage.aspx.

In addition to providing this and other PWR publications, Oregon BOLI Labor & Industries' PWR Unit regularly offers free, informational seminars for both public agencies and contractors. The current schedule is available online at https://www.oregon.gov/boli/employers/Pages/prevailing-wage-seminars.aspx.

If you are interested in being included on our mailing lists for future seminar notifications, please contact us at PWR.Email@boli.oregon.gov or (971) 245-3844.

Occupation and Premium/Differential Pay **Base Rate / Fringe Rate**

ELECTRICIAN

Electrician/Limited Energy Electrician Area Map

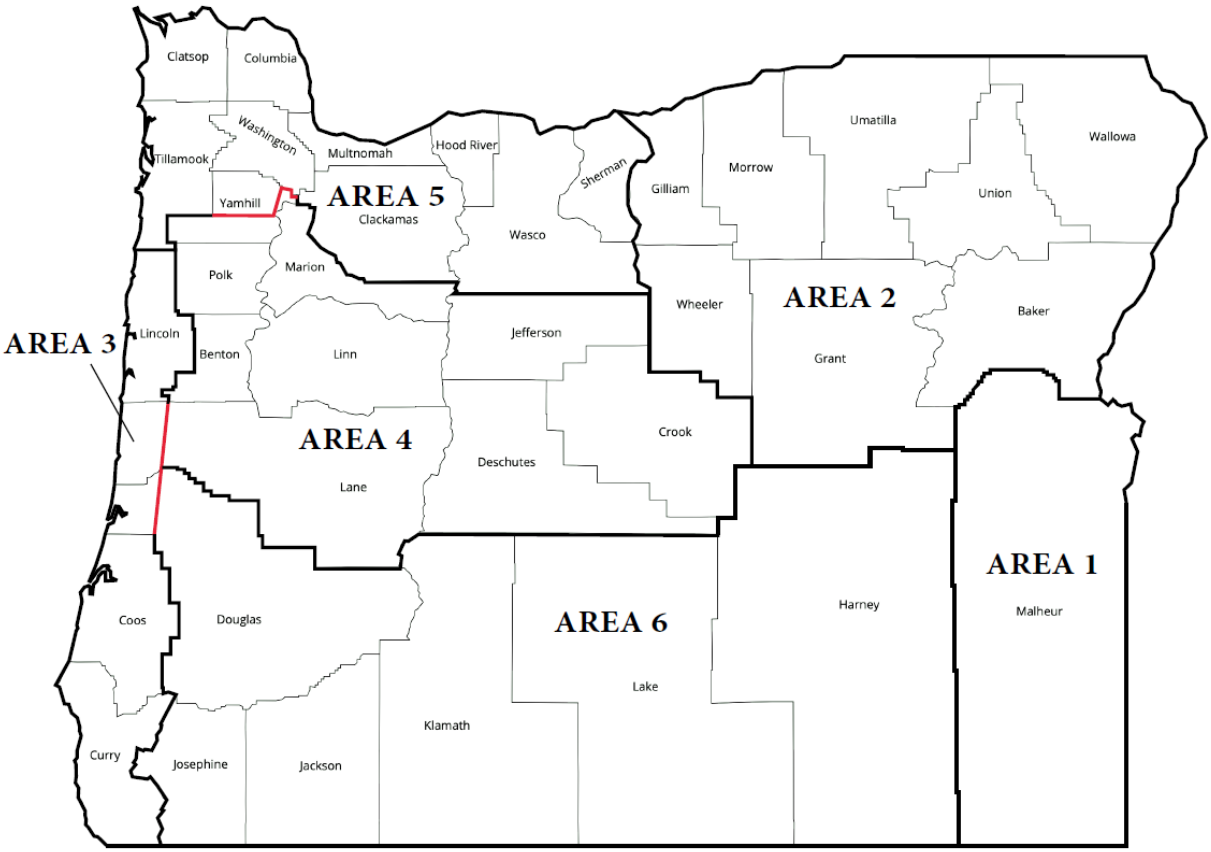

Note: If you are unable to determine the area of a project located on or near the cross-county boundaries marked in red on the map, call or email the BOLI Prevailing Wage Rate Coordinator at (971) 245-3844 or PWR.email@boli.oregon.gov.

Area 2

Electrician	**60.00**	**27.78**
Cable Splicer	**63.00**	**27.87**
Certified Welder	**75.00**	**28.23**
Material Handler	**36.00**	**20.76**

Reference Counties

Baker	Grant	Umatilla	Wallowa
Gilliam	Morrow	Union	Wheeler

Add 50% of the base rate when workers are required to work under the following conditions:

1) Under compressed air with atmospheric pressure exceeding normal pressure by at least 10%.

2) From trusses, swing scaffolds, bosun's chairs, open platforms, unguarded scaffolds, open ladders, frames, tanks, stacks, silos and towers where the workman is subject to a direct fall of (a) more than 60 feet or (b) into turbulent water under bridges, powerhouses or spillway faces of dams.

Occupation and Premium/Differential Pay	Base Rate	Fringe Rate

IRONWORKER

Zone 1 (Base Rate):	**48.31**	**34.48**

Zone Differential for Ironworker – Add to Basic Hourly Rate

Zone 2: **8.13**/hr. or $65.00 maximum per day
Zone 3: **11.25**/hr. or $90.00 maximum per day
Zone 4: **16.25/**hr. or $130.00 maximum per day

Zone 1: Projects located within 45 miles of city hall in the reference cities listed below.
Zone 2: More than 46 miles, but less than 60 miles.
Zone 3: More than 61 miles, but less than 100 miles.
Zone 4: More than 100 miles.

Note: Zone pay for Ironworkers shall be determined using the quickest route per Google Maps and computed from the city hall or dispatch center of the reference cities listed below **or** the residence of the employee, whichever is nearer to the project.

Reference Cities and Dispatch Center

Portland

PLASTERER AND STUCCO MASON

This trade is tended by "Tenders to Plasterers."

Zone A (Base Rate)	**46.56**	**19.83**

Zone Differential for Plasterer and Stucco Mason – Add to Zone A Base Rate

Zone B: **6.00** per hour
Zone C: **9.00** per hour
Zone D: **12.00** per hour

Zone A: Projects located less than 61 miles from the respective city hall of the reference cities listed below.
Zone B: Projects located 61 miles to 80 miles.
Zone C: Projects located 81 miles to 100 miles.
Zone D: Projects located 101 miles or more.

Reference Cities for Plasterer & Stucco Mason

Bend	Eugene	Medford	Portland	Seaside
Coos Bay	La Grande	Newport	Salem	The Dalles

Add $1.00 to base rate for swinging scaffold work.

Add $2.00 to base rate for nozzle technicians on plastering machines.