ASHLAND SCHOOL DISTRICT

DISTRICT WIDE HVAC UPGRADES PROJECT

BELLVIEW ELEMENTARY SCHOOL

BID DOCUMENTS

HMK COMPANY

MFIA INC.

NOVEMBER 21, 2022

PROJECT MANAGER:	Brandon Reid, Project Manager HMK Company 46 N Front Street, Suite 201 Medford, OR 97501 Phone: 303-261-2089 Email: brandon.reid@hmkco.org
DESIGN PROFESSIONAL:	Scott Miller, Principal MFIA, Inc 2007 SE Ash Street Portland, Oregon 97214 Phone: 503-234-0548 Email: scott.miller@mfia-eng.com
SCHOOL DISTRICT:	Steve Mitzel, Program Executive Ashland School District 885 Siskiyou Blvd Ashland, OR 97520 Phone: 541-482-2811 Email: steve.mitzel@ashland.k12.or.us
PROJECT:	Ashland School District District Wide HVAC Upgrades Project Bellview Elementary School
LOCATION:	1070 Tolman Creek Rd Ashland, Oregon 97520

TABLE OF CONTENTS

DIVISION 00 – PROCUREMENT AND CONTRACTING REQUIREMENTS

00 0110 – Table of Contents
00 1113 – Invitation to Bid
00 2113 – Instructions to Bidders
00 4100 – Bid Form
00 4339 – First Tier Sub Contractor Disclosure
00 5000 – Stipulated Sum Agreement
00 6000 – General Conditions
00 6113 – Payment Bond
00 6613 – Performance Bond
00 7343 – Prevailing Wage Requirements
00 8000 – Supplementary Conditions

DIVISION 01 – GENERAL REQUIREMENTS

01 1000 – Summary
01 2000 – Price and Payment Procedures
01 2300 – Alternates
01 3000 – Administrative Requirements
01 3216 – Network Analysis Schedule
01 4000 – Quality Requirements
01 5000 – Temporary Facilities and Controls
01 5100 – Temporary Utilities
01 5713 – Temporary Erosion and Sediment Control
01 5721 – Indoor Air Quality Controls
01 6000 – Product Requirements
01 6023 – Substitution Request Form
01 6116 – Volatile Organic Compound (VOC) Content Restrictions
01 7000 – Execution and Closeout Requirements
01 7419 – Construction Waste Management and Disposal
01 7800 – Closeout Submittals
01 7900 – Demonstration and Training
01 9100 – Commissioning

DIVISION 23 – TECHNICAL SPECIFICATIONS PROVIDED BY MFIA, Inc.

23 0500 HVAC Materials and Methods
23 0548 Sound and Vibration Control
23 0590 Testing, Adjusting and Balancing
23 0700 HVAC Insulation
23 0923 DDC Controls
23 0993 Sequence of Operation for HVAC Controls
23 2100 Hydronic Piping and Pumps
23 2500 HVAC Water Treatment
23 3000 Air Distribution
23 3400 HVAC Fans
23 4000 HVAC Air Cleaning Devices
23 6215 Air Cooled Liquid Chiller
23 7400 Central Station HVAC Units

DIVISION 26 – TECHNICAL SPECIFICATIONS PROVIDED BY MFIA, Inc.

26 0000	Common Work Results for Electrical
26 0523	Control – Voltage Electrical Power Cables
26 0526	Grounding and Bonding for Electrical Systems
26 0529	Hangars And Supports for Electrical Systems
26 0533	Raceway and Boxes for Electrical Systems
26 0544	Sleeves And Sleeve Seals for Electrical Raceways and Cabling
26 0548.16	Seismic Controls for Electrical Systems
26 0553	Identification For Electrical Systems
26 0575	Electrical Connections to Equipment
26 2413	Switchboards
26 2816	Enclosed Switches and Circuit Breakers

ATTACHMENT – MECHANICAL DRAWINGS PROVIDED BY MFIA, Inc. DATED NOVEMBER 17, 2022

ATTACHMENT – ELECTRICAL DRAWINGS PROVIDED BY MFIA, Inc. DATED NOVEMBER 17, 2022

ATTACHMENT A – Prevailing Wage Rate

ASHLAND SCHOOL DISTRICT
DISTRICT WIDE HVAC UPGRADES PROJECT
BELLVIEW ELEMENTARY SCHOOL
Bids Due 2:00 PM, December 15, 2022

INVITATION FOR BIDS

NOTICE IS HEREBY GIVEN that sealed bids will be accepted at **the HMK Medford Office** by Brandon Reid, Project Manager, HMK Company at 46 N Front Street, Suite 201, Medford, OR 97501 until **2:00 PM** Local Time, **December 15, 2022,** at which time and place bids will be closed. A public bid opening will be held immediately after closing.

The work consists of:

1. New controls for:

    a. 3 single constant volume units with chilled water, heating water coils, air-side economizer. These are three new units to replace other systems in 3 classrooms not previously served by the chiller.

    b. 3 space pressure relief fans

    c. Space temperature sensors for 3 I.T. closets

2. Mechanical revisions:

    a. Replace existing air-cooled chiller with new under alternate #1

    b. Add 3 mechanical room relief plenum system fans with new discharge hood

    c. Modify existing single zone heating and ventilation AHU for gym to include chilled water coil and SZ VAV operation (motor replacement). This includes modification of the unit line voltage panel with the addition of a VFD.

    d. Salvage to owner 2 split systems

    e. Replace chilled water pumps with slightly larger units

    f. Add isolation valves at the boilers for true lead-lag operation via the Aerco boil control panel

    g. Install 3 new air handlers with heating and chilled water coils for HVAC needs of three existing classrooms. This includes distribution ductwork, chilled water, and heating water piping.

3. Electrical revisions:

    a. Upgrade Electrical main service panel for larger chiller breaker under alternate #1. This involves on site modification of the panel per U.L. guidelines.

    b. New connections for new and modified mechanical devices

The following deadlines and restrictions are applicable to the project: Project Start date is **June 19, 2023**.

Contract must meet a Substantial Completion date of **August 25, 2023.**

A MANDATORY Pre-Bid Meeting will be held at **3:30 PM** on **November 28, 2022,** at **Bellview Elementary School** located at **1070 Tolman Creek Rd, Ashland, OR 97520**. Representatives of the Contractors will meet with the Owner and Project Manager for review of the project specifications and then visit the site for a walk of the facility.

All bids must be submitted on the proposal forms furnished to the bidders. Each bid proposal shall be submitted in a sealed envelope and plainly marked **"DISTRICT WIDE HVAC UPGRADES - BELLVIEW ELEMENTARY SCHOOL"** and show the name and business address of the bidder. Each bid must be accompanied by an unconditional cashier's check, certified check or surety bond of the bidder in the amount of ten percent (10%). Unsuccessful bidders will have their security refunded to them when the contract has been awarded.

Bid documents may be obtained from the HMK Company web site https://www.hmkco.org/bid-documents/.

Any objections to or comments upon the bid specifications must be submitted in writing to the attention of Brandon Reid, Project Manager, HMK Company, 46 N Front Street, Suite 201, Medford, OR 97501. To be considered, such objections or comments must be received at least FIVE (5) working days before the bid closing date.

This contract is for a public work subject to ORS 279C.800 to 279C.870 (the Oregon Prevailing Wage Rate Law). **BOLI wage rates will be applicable to this project.** The wage rates are included in the bid documents which are available as noted above.

No bid for a construction contract shall be received or considered by the public contracting agency unless the bidder is licensed by the Construction Contractors Board of the State of Oregon as required by ORS 701.035 and 701.055. Each bid must identify whether the bidder is an Oregon resident bidder, as defined in ORS 279A.120.

Bidder's attention is directed to compliance with ORS 279C.370 regarding submission of the First-Tier Subcontractor Disclosure Form. If the contract amount exceeds $100,000.00, the First-Tier Subcontractor Disclosure Form will be required and may be submitted either with the bid or within **two (2)** hours after the bid closing time and date at the bid site address. Failure to provide the First-Tier Subcontractor Disclosure Form may result in bid rejection.

The District reserves the right to reject any or all bids, to waive formalities, and to postpone the award of the contract for thirty (30) days. All bids and all prices quoted in bids shall be firm for a period of sixty (60) days after the bid closing date.

Dated this 21st day of November 2022

Brandon Reid
Project Manager, HMK Company
on behalf of Ashland School District

PART 1 – GENERAL

1.1 GENERAL

A. The Work contemplated under this contract with Ashland School District, (also referred to as the Owner or the District), includes all labor, materials, transportation, equipment and services necessary for, and reasonably incidental to, the completion of all Work in connection with the project described in the bidding documents.

B. A brief summary of the Work to be completed for the District is as follows:

1. New controls for:

   a. 3 single constant volume units with chilled water, heating water coils, air-side economizer. These are three new units to replace other systems in 3 classrooms not previously served by the chiller.

   b. 3 space pressure relief fans

   c. Space temperature sensors for 3 I.T. closets

2. Mechanical revisions:

   a. Replace existing air-cooled chiller with new under alternate #1

   b. Add 3 mechanical room relief plenum system fans with new discharge hood

   c. Modify existing single zone heating and ventilation AHU for gym to include chilled water coil and SZ VAV operation (motor replacement). This includes modification of the unit line voltage panel with the addition of a VFD.

   d. Salvage to owner 2 split systems

   e. Replace chilled water pumps with slightly larger units

   f. Add isolation valves at the boilers for true lead-lag operation via the Aerco boil control panel

   g. Install 3 new air handlers with heating and chilled water coils for HVAC needs of three existing classrooms. This includes distribution ductwork, chilled water, and heating water piping.

3. Electrical revisions:

   a. Upgrade Electrical main service panel for larger chiller breaker under alternate #1. This involves on site modification of the panel per U.L. guidelines.

   b. New connections for new and modified mechanical devices

1.2 EXAMINATION OF SITE AND CONDITIONS

A. Prior to submitting a bid, the bidder shall examine the District facilities, and ascertain all of the physical conditions in relation thereto. The bidder shall also make a careful examination of the drawings, specifications and other contract documents and shall fully inform himself as to the quantity of materials and the sources of supply of the materials. Failure to make these precautions will not release the successful bidder from entering into a contract or excuse him from performing the Work in strict accordance with the terms of the contract.

B. The Owner will not be responsible for any loss or any unanticipated costs that may be suffered by the successful bidder as a result of such bidder's failure to fully inform himself in advance with regard to all conditions pertaining to the Work and the character of the Work required. No statement made by any officer, agent or employee of the Owner in relation to the physical conditions pertaining to the site of the Work will be binding on the Owner.

1.3 INTERPRETATION OF CONTRACT DOCUMENTS

A. If any person contemplating submitting a bid for the proposed contract finds discrepancies in, or omission from, or is in doubt as to the true meaning of any part of the drawings, specifications or form of contract documents, he may submit to the

Architect a written request for an interpretation thereof to be received in the office of the Architect no later than **7 calendar days before bids due, before 2:00 PM** local time. The person submitting the request will be responsible for its delivery prior to the time of closing.

B. Any official interpretation of the drawings, specifications, and conditions of the contract or forms of contract documents will be made only by subsequent addenda issued by the Project Manager. The Owner will not be responsible for any other explanation or interpretation of the proposed documents.

1.4 SPECIFIED PRODUCTS AND SUBSTITUTIONS

A. Bids must be based upon the use of items and manufacturers named in the specifications, or, approved equals issued by addenda during the bidding period. <u>Approval of equals or substitutions must not be assumed.</u>

B. If a prospective bidder or supplier seeks approval of a particular manufacturer's material or product other than the material, product and / or manufacturer designated in the specifications, he may submit a written request for such substitute material, product and / or manufacturer. Substitution requests are to be submitted using the Substitution Request Form included in this project manual. Substitution requests must be received in the office of the architect no later than **7 calendar days before bids due, before 2:00 PM** local time. The person requesting the substitution will be responsible for delivery of the substitution request form prior to the time of closing. **Faxed or Emailed Substitution Request Forms will be accepted.**

B. Approval of substitution requests will be made only by addenda issued by the Project Manager during the bidding period. The Owner will not be responsible for any other approval of a particular manufacturer's materials.

1.5 PRE-BID MEETING

A. A **MANDATORY** Pre-Bid Meeting will be held at **3:30 PM** on **November 28, 2022,** at **Bellview Elementary School, 1070 Tolman Creek RD, Ashland OR 97520**. Representatives of the Pre-Qualified Contractors will meet with the Owner and Project Manager at the site for review of the project specifications and site walk of the facility.

B. Contractors intending to submit proposals for this project must attend this pre-bid meeting. No other meeting will be held.

1.6 GENERAL STATUTORY PROVISIONS CONCERNING PUBLIC CONTRACTS

A. In accordance with the provisions of Oregon Revised Statues (ORS) 279C.530, it is agreed that the Contractor shall make prompt payment, as due, to all person supplying to the contractor labor or materials for the prosecution of the Work provided for herein, pay all contributions or amounts due the State Industrial Accident Fund from the Contractor incurred in the performance of the contract herein, not permit any lien or claims to be file or prosecuted against the District on account of any labor or material furnished, and to pay the State Tax Commission all sums withheld from employees pursuant to ORS 316.169, ORS 316.189 and ORS 316.167.

B. Pursuant to ORS 279C.515, it is agreed that if the Contractor fails, neglects or refuses to make prompt payment on any claim for labor or services furnished to the Contractor by any persons in connection with this agreement as such claim becomes due, the proper officer of officers representing the District may pay such claim to the person furnishing the labor or service and charge the amount of the payment against the Contractor. The payment of a claim in the manner authorized in this paragraph shall not relieve the Contractor or his surety from obligation with respect to any unpaid claims.

C. Pursuant to ORS 279C.520, it is a condition of this agreement that no person shall be employed by the Contractor for more than eight (8) hours in any one (1) day, or forty hours in any one (1) week, except in cases of necessity, emergency or where the public policy absolutely requires it, and in such cases, the person shall be paid at least time and a half pay for all overtime in excess of eight (8) hours in any one (1) day and for Work performed on Saturdays and legal holidays.

D. Pursuant to ORS 279C.525 the Contractor shall comply with the provisions of all federal, state and local statues, ordinances and regulations dealing with the prevention of environmental pollution and the preservation of natural resources that affect the project.

E. Pursuant to ORS 279C.530, it is an express condition of this agreement that the Contractor shall, promptly, as due, make payment to any person, co-partnership, association or corporation furnishing medical, surgical and hospital care or other needed care and attention, incident to sickness or injury, to the employees of such Contractor, or all sums which the Contractor may or shall have deducted from their wages of his employees for such services pursuant to the terms of ORS 279B.230, and any contract entered into pursuant thereto, or collected or deducted from the wages of its employees pursuant to any law, contract or agreement for the purposes of providing or paying for such service.

F. The hourly rate of wage to be paid by the Contractor (and incorporated in his

subcontracts) shall not be less than provided in ORS 279C.800 to ORS 279C.870, and as hereinafter included in Section 00 7343-BOLI Wage Rate Requirements.

G. Pursuant to ORS 645.001 et seq. OAR Chapter 437, Div. 3 and OAR Chapter 437-002-0320 through OAR Chapter 437-002-0325, the Contractor shall comply with the following conditions under any contract to provide the District with goods or services.

1. Contractors and their employees shall comply with the requirements of the above cited Laws, Rules, Policies and Regulations

2. The Contractor shall review the Material Safety Data Sheets filed by the District to determine if there are any chemicals stored at the site of Work which the Contractor or any subcontractors will use, or could be exposed to in an emergency

3. Workers shall inform the executive officer at the location where services are being performed of all hazardous chemicals which they or their sub-contractors bring upon education facility property, and upon request, provide the District with M.S.D.S. for such chemicals

H. Each bid shall identify whether the bidder is an Oregon resident bidder, as defined in ORS 279A.120.

I. Pursuant to ORS 279C.830 (3), the contractor and every subcontractor must have a public works bond filed with the Construction Contractors Board before starting work on the project, unless exempt under ORS 279C.836 (4), (7), (8) or (9).

1.7 BID SECURITY

A. No bid will be considered unless accompanied by a cashier's check or bid bond executed in favor of the District and associated facility for an amount equal to at least ten percent (10%) of the base bid and shall accompany the bid as evidence of good faith and as guarantee that if awarded the contract the bidder will execute the contract and provide a performance bond and payment bond as required. The successful bidder's check or bid bond will be retained until he has entered into a satisfactory contract and furnished a 100% performance bond and payment bond. The Owner reserves the right to hold the bid security as hereinafter noted.

B. The bid bond shall be furnished by a bonding company licensed to do business in the State of Oregon.

C. Should the successful bidder fail to execute and deliver the signed agreement and a satisfactory payment bond and performance bond within ten (10) days after the bid has been accepted by the Owner, the cashiers check or bid bond may be forfeited as liquidated damages at the option of the Owner. The date of acceptance of the bid and the award of the contract as contemplated by the contract documents shall mean the day on which the Owner takes official action in making the award.

1.8 EXECUTION OF THE BID FORM

A. The bid form invites bids on definite drawings and specifications. Only the amounts and information asked for on the bid form furnished will be considered as the bid. Each bidder shall bid upon the Work exactly as specified and provided in the bid form. The

bidder shall include in a sum to cover the cost of all items contemplated by the bidding documents.

B. The bid form included in the project manual as Document 00 4100 is the official bid form that will be used in submitting a bid. Only the official bid form may be used in submitting a bid.

C. All blank spaces in the official bid form shall be filled and numbers shall be stated both in writing and in figures. If the bid is made by a partnership, it shall contain the names of each partner and shall be signed in the firm name, followed by the signature of the partner signing for the firm. The address of the bidder shall be typed or printed on the bid form.

D. Bids which are incomplete, or which are conditioned in any way, or which contain erasures or alterations may be rejected.

1.9 SUBMISSION OF BID

A. The bid proposal shall be sealed in an opaque envelope, addressed as follows:

BID PROPOSAL
DISTRICT WIDE HVAC UPGRADES
BELLVIEW ELEMENTARY SCHOOL
JACKSON COUNTY SCHOOL DISTRICT 5
46 N Front Street, Suite 201
Medford, Oregon 97501
Attn: Brandon Reid, Project Manager

B. Bids will be received up to **2:00 PM**, local time, **December 15, 2022,** at the address listed above.

D. Any bid submitted after the scheduled closing time will be returned to the bidder unopened.

1.10 OPENING OF BIDS

A. A public bid opening will be held immediately following the scheduled closing via Teams Meeting. A link to the meeting will be emailed to those firms listed on the Pre-bid meeting sign-in sheet prior to the time of bid. Each and every bid received prior to the closing time will be publicly opened and read aloud irrespective of any irregularities or informalities contained in such bids.

1.11 DURATION OF BID PROPOSALS

A. The base bid shall be irrevocable for a period of sixty (60) days from the date and time of bid opening.

B. The base bid may be adjusted for alternate prices and / or unit prices for a period of sixty (60) days from the date and time of bid opening.

1.12 CONTRACT AND BOND

A. Within ten (10) days after receipt of Notice of Award, any bidder to whom a contract is

awarded shall execute a formal written contract and shall furnish corporate surety bonds with a surety company satisfactory to the District in an amount equal to the full contract sum based upon the estimated quantities of items covered by the contract for the faithful performance of said contract and all provisions thereof; provided, the formation of said contract shall not be completed and the District shall not be liable thereon until said formal written contract has been executed both by the successful bidder and by the District and a performance bond and a payment bond, properly executed has been delivered and accepted by the District.

B. The cashiers check or bid bond of the bidder with whom a contract is entered into will be returned when said contract has been properly executed by the bidder and said performance and payment bond, properly executed, has been delivered to and accepted by the District. The cashiers check or bid bond to each bidder who was not awarded a contract will be returned promptly after the contract and bond of the successful bidder, properly executed, has been delivered to and accepted by the District.

C. Any bidder to whom a contract is awarded and who shall default in executing said formal written contract or in furnishing a satisfactory performance and payment bond within the time and in the manner required by these specifications shall be liable to the District for whatever damages, including expenses and attorney's fees as may be incurred by the District in recovering to another bidder whether by a single action or by successive actions, shall not operate to release any defaulting bidder from said liability. The parties agree that the cashiers check or bid bond amount is fair determination of the amount of damages which the District would incur as a result of any such failure on the part of the bidder and the full amount will be forfeited as liquidated damages and will not constitute a penalty. In the event competent tribunal finds that this amount does not properly represent an award of liquidated damages, expenses and attorney's fees incurred by the District as a result of the bidder's default, then the final determination of the tribunal shall be deemed to represent the damages, expenses and attorneys fees incurred by the District as a result of the bidder's default.

1.13 SUBSTANTIAL COMPLETION AND LIQUIDATED DAMAGES

A. Substantial Completion shall occur by **August 25, 2023.**

B Should the building not be ready for occupancy by the time and date listed above, liquidated damages to be paid by the Contractor to the Owner for each calendar day of delay, shall be included in the terms of any contract awarded hereunder in lieu of a penalty. The amount of liquidated damages shall be $1,000.00 per day.

1.14 DISTRICT PERSONNEL EXCLUDED FROM THE CONTRACT

A. No officer, agent or employee of the District shall be permitted any interest in the contract.

1.15 RESERVATIONS

A. The Board of Directors of Ashland School District, expressly reserves the following rights:

1. To reject all bids

2. To waive any or all irregularities in bids submitted

3. To consider the responsibility and competency of bidders in making any award

4. In the event two or more bids shall be for the same amount for the same Work, to award the contract by lot or otherwise as it deems appropriate

5. To award contract to one Contractor with the aggregate low bid

6. To reject any bid or bids not in compliance with prescribed bidding procedures and requirements

7. To reject any bid or bids not meeting the specifications set forth herein

8. In the event any bidder to whom a contract is awarded shall default in executing said formal contract or in furnishing a satisfactory performance and payment bond within the time and in the manner herein before specified, to re-award the contract to another bidder.

9. To accept Alternates in any order or combination, and to determine the low Bidder on the basis of the sum of the Base Bid and Alternates accepted.

1.16 ACCEPTANCE OF CONDITIONS

A. Each bidder by submission of a bid assents to each and every term and condition set forth anywhere in these contract documents and agrees to be bound thereby.

1.17 INTERPRETATION UPON CONTRACT DOCUMENTS

A. Only the Board of Directors of Jackson County School District 5 as represented by the Project Manager has authority to place any interpretation upon the foregoing or annexed contract documents. Any interpretation, either verbal or written, attempted to be placed thereon by any other person will not be binding upon the District.

1.18 EQUAL EMPLOYMENT

A. All bidders shall comply with the Provision of Executive Order 1246 (30 F.R. 12319-25) regarding Equal Employment Opportunity.

1.19 IMMIGRATION REFORM AND CONTROL ACT

A. All bidders shall comply with the provisions of the Immigration Reform and Control Act of 1986 regarding the verification of employment eligibility.

1.20 REFERENCES REQUIREMENTS

A. All bidders shall provide a list of three different project references for projects that the Contractor worked on within the last three years of comparable size and scope. **References must be submitted with the Bid Form.**

B. Bidders shall use their own form to supply their list of references. The list of project references shall include the following information:

1. Name of the Project

2. Project description

3. Project location

4. Project date

5. Dollar value of the Project

6. Name of the project contact person

7. Telephone number for contact person

8. Email for contact person

C. The references will be checked to determine if they are supportive of the bidder's ability to meet the requirements of this ITB.

D. The bidder must provide references that can be contacted regarding the quality of workmanship, level of service provided, timeliness of completion, and adherence to specifications.

E. The District reserves the right to choose and investigate any reference whether or not furnished by the bidder, and to investigate past performance of any bidder with respect to its successful performance on similar projects, its completion or delivery of service on schedule, and its lawful payment of suppliers, Subcontractors, and employees.

F. The District may postpone the award or execution of the Contract after the announcement of the apparent successful Contractor in order to complete its investigation. The District may reject a bid if, in the opinion of the District the overall reference responses indicate inadequate performance of the Contractor.

G. The District representative will make three attempts to contact the references from the list provided by the Contractor. If the reference is not contacted after three attempts that reference will be removed from the list and the bid rejected as non-responsive.

H. Each reference contacted shall be asked the same questions, including but not limited to: (1) quality of service; (2) delivery; (3) responsiveness to reported problems, including orders and billing; (4) how well the Contractor met the terms of the contract; and (5) whether or not the reference would choose to hire the Contractor again.

1.21 CRIMINAL HISTORY CHECK / PHOTO ID

A. It is the responsibility of the Contractor to submit the names of all Contractor employees and all Subcontractor employees who will be on the job site for more than one day. These employees shall fill out a criminal history form provided by the District and the Contractor must submit the completed forms to HMK Company (HMKCO). Criminal history checks will be run through the Oregon State Police as provided for in ORS 326.603. The District shall bear the cost of processing such Criminal history checks.

1. Through the signature on the criminal history form, authorization is also given to HMK Company and its representative to investigate this information.

Further, with this signature, consent is given to all governmental agencies, public or private companies and individuals to release information regarding the individual to the HMK Company and to their representative. The District shall bear the cost of processing such Criminal history checks.

B. In accordance with ORS 326.603(8) the District is required to terminate the employment or contract status of any individual who refuses to consent to a criminal history check of to be fingerprinted or falsely swears to the non-conviction of any crime.

C. In accordance with ORS 326.603(7)(a) no individual found to have been convicted of any crime listed in ORS 342.143 or of an attempt to commit one of the listed crimes shall be allowed to work on any District site.

1. It is vital that employees are instructed to accurately complete criminal history forms. Crimes listed in ORS 342.143 which automatically bar an individual from employment with or contracting with the District are primarily crimes of violence, crimes against children, and sex related crimes. However, falsely swearing that you have not been convicted of a crime obligates the District to terminate employment or contract status even if the crime is not listed in ORS 342.143.

D. No Employee shall have direct contact with students.

E. All employees working on site for more than one day shall wear a Name and Photo Identification Badge. Any employee on site for less than one day shall wear a visitor badge. Badges shall be the responsibility of the Contractor to provide. Badge shall state the Ashland School District, name of the project, employee name, and company they represent.

1.22 TOBACCO FREE EDUCATION FACILITY

A. All bidders shall comply with OAR 581.021.0110 and ORS 326.051 regarding Tobacco Use on Public Grounds.

B. For the purpose of this document “tobacco” is defined to include any lighted or unlighted cigarette, cigar, pipe, clove cigarette, and any other smoking product, spit tobacco, also known as smokeless, dip, chew, snuff, in any form, nicotine or nicotine delivering devices, chemicals or devices that produce the physical effect of nicotine substances or any other tobacco substitute (e.g., e-cigarettes). This does not include FDA approved nicotine replacement therapy products used for the purpose of cessation.

C. No employee, sub-contractor, material supplier, or project visitor is permitted to smoke, inhale, dip, or chew or sell tobacco at any time, <u>including non-education hours.</u>

1. In any building, facility; or

2. On education facility grounds, athletic grounds, or parking lots.

END OF SECTION

DATE:_____

LEGAL NAME OF BIDDER:_____

To: Jackson County School District 5
Board of Directors
885 Siskiyou Blvd
Ashland, Oregon 97520

The Undersigned, having examined the Contract Documents, including the Bidding and Contract Requirements, the General Requirements, the Technical Specifications entitled:

DISTRICT WIDE HVAC UPGRADES - BELLVIEW ELEMENTARY SCHOOL

As prepared by (MFIA, Inc.) and Ashland School District, as well as the premises and conditions affecting the Work, hereby proposes and agrees to perform, within the time stipulated, the Work, including all its component parts, and everything required to be performed, and to provide and furnish all labor, material, tools, expendable equipment, transportation and all other services required to perform the Work and complete in a workmanlike manner ready for use, all as required by and in strict accordance with the Contract Documents for the sums computed as follows:

BASE BIDS:

Project: District Wide HVAC Upgrades - Bellview Elementary School

_____DOLLARS $_____

which lump sums are hereby designated as BASE BIDS,

ALTERNATES

Provide all labor and materials necessary for the provisions of these alternate prices as referenced in 01 2300

Alternate 1: Replace existing air-cooled chiller with new_____Dollars $_____

Alternate 1a: Upgrade electrical main service panel for larger chiller breaker___Dollars $_____

Alternate 2: Replacement of all control devices for new system_____Dollars $_____

UNIT PRICING ADDITIVE OR DEDUCTIVE

Provide all labor, equipment and materials necessary for the provisions of these unit prices as referenced in Section 00 2113.

Unit prices shall be for any additive or deductive work. The unit price shall include full compensation for the cost of labor, materials, equipment, overhead, profit, and any additional costs associated with the unit price bid.

Unit Price 1: _____ Dollars $ _____ Each

Unit Price 2: _____ Dollars $ _____ Each

Unit Price 3: _____ Dollars $ _____ Each

Unit Price 4: _____ Dollars $ _____ Each

TIME OF COMPLETION

The Undersigned agrees if awarded the Contract to complete all the Work in an acceptable manner in conformance with the Contract Documents and within the time specified.

ADDITIONAL REQUIREMENTS

1. The Undersigned agrees that the enclosed Bid Guarantee (bid bond, certified or cashier's check) in the amount of ten percent (10%) of the Basic Bid sum made payable to the Owner, shall be kept in escrow with the Owner; that its amount shall be a measure of liquidated damages the Owner will sustain by failure of the Undersigned to execute agreement and furnish bond, and that if the Undersigned fails to deliver the prescribed bond within ten (10) calendar days after receipt of the written notice of award, then the Bid Guarantee shall become the property of the Owner.

2. Should this proposal not be accepted within sixty (60) calendar days after the date and time of bid opening, or if the Undersigned executes Agreement and delivers bond, the Bid Guarantee shall be returned.

3. Contractor's State of Oregon Contractors' License Registration Number.
   _____

4. Receipt of Addenda numbered _____ is hereby acknowledged.

5. The undersigned certifies that the Bidder is a _____ Bidder as defined in ORS 279A.120. ("Resident" or "Non-Resident", to be filled in by Bidder)

6. References are to be submitted with Bid Form as per Section 00 2113, 1.20.

SIGNATURES

_____
Legal Name of Bidder's Firm

By:_____ Title:_____

Address:_____ Telephone:_____

Email: _____

State of Incorporation, if Corporation:_____

Names of Partners, if Partnership:

_____ _____

Signed By_____

_____
Printed Name of Bidder / Firm

Bids which are submitted by Bid Closing, but for which a required disclosure submittal has not been made by the specified Disclosure Deadline, are not responsive and shall not be considered for Contract award.

AGENCY SUPPLIED INFORMATION:

PROJECT NAME: District Wide HVAC Upgrades - Bellview Elementary School

BID #: ___N/A_____BID CLOSING: Date: **December 15, 2022,** Time: **2:00 PM**
REQUIRED DISCLOSURE DEADLINE: Date: **December 15, 2022,** Time: **4:00 PM**
Deliver Form To (Agency): Jackson County School District 5
Designated Recipient (Person): Brandon Reid, Project Manager
Agency's Address: 46 N Front Street, Suite 201
Medford, OR 97501

INSTRUCTIONS:

The contracting agency will insert "N/A" below if the contract value is not anticipated to exceed $100,000. Otherwise, this form must be submitted either with the bid or within **TWO (2)** working hours after the advertised bid closing date and time;

FAILURE TO SUBMIT THIS FORM BY THE DISCLOSURE DEADLINE WILL RESULT IN A NON-RESPONSIVE BID. A NON-RESPONSIVE BID WILL NOT BE CONSIDERED FOR AWARD.

It is the responsibility of bidders to submit this disclosure form and any additional sheets, with the bid number and project name clearly marked, and must be submitted at the location specified in the Invitation to Bid on the advertised bid closing date and within two (2) working hours after the advertised bid closing time at the location indicated by the specified disclosure deadline. See "Instructions to Bidders".

List below the name of each subcontractor that will be furnishing labor or materials and that is required to be disclosed, the category of work that the subcontractor will be performing and the dollar value of the subcontract. Enter" NONE" if there are no subcontractors that need to be disclosed. (ATTACH ADDITIONAL SHEETS IF NEEDED).

BIDDER DISCLOSURE:

SUBCONTRACTOR NAME	DOLLAR VALUE	CATEGORY OF WORK
1)		
2)		
3)		
4)		
5)		
6)		

7)		
8)		
9)		
10)		
11)		
12)		
13)		
14)		
15)		
16)		

The above listed first-tier subcontractor(s) are providing labor, or labor and material, with a Dollar Value equal to or greater than:

a) Five percent (5%) of the total Contract Price, but at least $15,000. (If the Dollar Value is less than $15,000, do not list the subcontractor above);

or

b) $350,000 regardless of the percentage of the total Contract Price.

Form Submitted By (Bidder Name): _____

Contact Name: _____

Phone #: _____

Email: _____

END OF SECTION

AGREEMENT made as of the___ day of _____, 202_, between **JACKSON COUNTY SCHOOL DISTRICT 5 (**hereinafter "the Owner") **and** _____, (hereinafter "the Contractor").

The Project is: Jackson County School District 5
District Wide HVAC Upgrades Project
Bellview Elementary School

The Owner is: Jackson County School District 5
Steve Mitzel, Program Executive
885 Siskiyou Blvd
Ashland, OR 97520

The Consultant is: Scott Miller, P.E.
MFIA, Inc.
2007 SE Ash St
Portland, OR 97214

The Contractor is: **To Be Determined**

The Owner and Contractor agree as follows:

ARTICLE 1 THE CONTRACT DOCUMENTS

The Contract Documents consist of this Agreement, the General Conditions of the Contract, any Supplementary, or other Conditions, Drawings, Specifications, Addenda issued prior to execution of this Agreement, other documents listed in this Agreement and Modifications issued after execution of this Agreement; these form the Contract, and are incorporated by this reference herein. The Contract represents the entire and integrated agreement between the parties and supersedes prior negotiations, representations or agreements, either written or oral. An enumeration of the Contract Documents, other than Modifications, appears in Article 8.

ARTICLE 2 THE WORK OF THIS CONTRACT

The Contractor shall fully execute the Work described in the Contract Documents, including such construction activity as is reasonably inferable from the Contract Documents as necessary to produce the results intended by the Contract Documents, except to the extent specifically indicated in the Contract Documents to be the responsibility of others.

ARTICLE 3 DATE OF COMMENCEMENT AND SUBSTANTIAL COMPLETION

3.1 The date of commencement of the Work shall be the date of the date to be fixed in a notice to proceed issued by the Owner, which shall be issued no less than two (2) days prior to the date of commencement.

3.2 The Contract Time shall be measured from the date of commencement.

3.3 The Contractor shall continuously and diligently prosecute the Work and shall achieve Substantial Completion of the entire Work not later than **August 25, 2023**, subject to approved adjustments of this Contract Time as provided in the Contract Documents.

3.4. If the Contractor fails to achieve Substantial Completion of the Work within the Contract Time and as otherwise required by the Contract Documents, the Owner shall be entitled to recover from the Contractor as liquidated damages and not as a penalty $1,000.00 per day which shall commence on the first day following the expiration of the Contract Time and continuing until the date of Substantial Completion. Such liquidated damages are hereby agreed to be a reasonable estimate of the damages the Owner will incur as a result of delay in the completion of the Work. The Owner may deduct any accrued liquidated damages from any unpaid amount due or to become due to the Contractor. Any Liquidated damages not so deducted shall be paid to the Owner upon demand together with interest as provided by Oregon law.

ARTICLE 4 CONTRACT SUM

4.1 The Owner shall pay the Contractor the Contract Sum in current funds for the Contractor's proper and timely performance of the Contract and full and final completion of the Work. The Contract Sum shall be **_____ DOLLARS AND XX/100 ($_____).** This sum includes all general conditions, profit, overhead and all other amounts due or to become due to the Contractor for the proper and timely performance of the Contract and full and final completion of the Work. The Contract sum is subject to authorized additions and deductions as provided in the Contract Documents.

4.2 PERMITS, FEES AND NOTICES

4.2.1 The Contractor shall secure and pay for:

.1 All pertinent specialty permits. (The owner is securing and paying for the plan review, building permit, and system development fees.)

4.2.2 The Contractor will be responsible for any renewals of and penalties arising from the building permit and from all other permits and governmental or utility fees. The Contractor shall secure and pay for all other permits and governmental fees, licenses and inspections necessary for proper execution and completion of the Work which are customarily secured after execution of the Contract and which are legally required when bids are received or negotiations concluded, including without limitation electrical, sewer, water, and plumbing permits and fees.

4.3 The Contract Sum is based upon the following alternates, if any, which are described in the Contract Documents and are hereby accepted by the Owner:

4.4 Unit prices, if any, are as follows: See Section 00 4100, Bid Form

ARTICLE 5 PAYMENTS

5.1 PROGRESS PAYMENTS

5.1.1 Based upon Applications for Payment which include all the necessary supporting documentation is received by the Owners Delegated Representative, and Owner not later than the first day of the month, and Certificates for Payment are issued by the Owners Delegated Representative, the Owner shall make progress payments on account of the Contract Sum to the Contractor as provided below and elsewhere in the Contract Documents.

5.1.2 The period covered by each Application for Payment shall be one calendar month ending on the last day of the month, or as follows:

5.1.3 Provided that an Application for Payment and all supporting documentation, including all full and unconditional lien waivers related to the Work for which payment is requested is received by the Owners

Delegated Representative and Owner not later than the first day of a month, the Owner shall make payment to the Contractor not later than the last day following the Owners Delegated Representative's approval. If an Application for Payment is received by the Owners Delegated Representative after the application date fixed above, payment shall be as set forth below.

5.1.4 Each Application for Payment shall be based on the most recent schedule of values submitted by the Contractor in accordance with the Contract Documents. The schedule of values shall allocate the entire Contract Sum among the various portions of the Work. The schedule of values shall be prepared in such form and supported by such data to substantiate its accuracy as the Owners Delegated Representative and any Lender may require. This schedule, unless objected to by the Owners Delegated Representative, shall be used as a basis for reviewing the Contractor's Applications for Payment, provided, however, in no instance shall the schedule of values ever exceed the reasonable value of the Work performed.

5.1.5 Applications for Payment shall indicate the percentage of completion of each portion of the Work as of the end of the period covered by the Application for Payment.

5.1.6 Unless otherwise provided in the Owner's agreement with any Lender, and subject to other provisions of the Contract Documents, the amount of each progress payment shall be computed as follows:

.1 Take that portion of the Contract Sum properly allocable to completed Work as determined by multiplying the percentage completion of each portion of the Work by the share of the Contract Sum allocated to that portion of the Work in the schedule of values, less retainage of Five percent (5%). Pending final determination of cost to the Owner of changes in the Work, amounts not in dispute shall be included as provided in Subparagraph 7.3.8 of the General Conditions, or as modified by the parties;

.2 Add that portion of the Contract Sum properly allocable to materials and equipment delivered and suitably stored at the site for subsequent incorporation in the completed construction (or, if approved in advance by the Owner, suitably stored off the site at a location agreed upon in writing), less retainage of five percent (5%);

.3 Subtract the aggregate of 9.5 previous Payments made by the Owner; and

.4 Subtract amounts, if any, for which the Owners Delegated Representative has withheld or nullified a Certificate for Payment as provided in Paragraph 9.5 of the General Conditions.

or as modified by the parties.

5.1.7 The progress payment amount determined in accordance with Subparagraph 5.1.6 shall be further modified under the following circumstances:

.1 Add, upon Substantial Completion of the Work, a sum sufficient to increase the total payments to the full amount of the Contract Sum, less such amounts as the Owners Delegated Representative, any Lender or the Owner shall determine for incomplete Work, retainage applicable to such Work and unsettled claims;

.2 Add, if final completion of the Work is thereafter materially delayed through no fault of the Contractor, any additional amounts payable in accordance with Subparagraph 9.10.3 of the General Conditions.

5.1.8 Reduction or limitation of retainage, if any, shall be as follows:

5.1.9 Except with the Owner's prior written approval, the Contractor shall not make advance payments to suppliers for materials or equipment which have not been delivered and stored at the site.

5.1.10 Contractor shall:

.1 Make payment promptly, as and when due, to all persons supplying to labor, materials, equipment or services;

.2 Pay all contributions or amounts due the Industrial Accident Fund from Contractor or any Subcontractor incurred in the performance of the Work;

.3 Not permit any lien or claim to be filed or prosecuted against the Owner, on account of any labor, materials, equipment or services furnished, supplied or provided;

.4 Pay to the Department of Revenue all sums withheld from employees pursuant to ORS 316.167;

.5 Demonstrate that an employee drug testing program as set forth herein is in place for Contractor and all Subcontractors pursuant to ORS 279C.505;

.6 To the extent that any demolition is included as a part of the Work, salvage or recycle construction and demolition debris, if feasible and cost-effective;

.7 To the extent that any lawn or landscape maintenance is included as a part of the Work, compost or mulch yard waste material at an approved site, if feasible and cost-effective.

5.1.11 If the Contractor fails, neglects or refuses to make prompt payment of any claim for labor or services furnished to the Contractor or any Subcontractor by any person in connection with the Work as such claim becomes due, the proper officer or officers representing the Owner may pay such claim to the person furnishing the labor or services and charge the amount of the payment against funds due or to become due the Contractor by reason of this Agreement.

5.1.12 If the Contractor or a first-tier Subcontractor fails, neglects or refuses to make payment to a person furnishing labor or materials in connection with the Work within 30 days after receipt of payment from the Owner or the Contractor, the Contractor or first-tier Subcontractor shall owe the person the amount due plus interest charges commencing at the end of the 10-day period that payment is due under ORS 279C.505 and 279C.580 and ending upon final payment, unless payment is subject to a good faith dispute as defined in ORS 279C.505 and 279C.580. The rate of interest charged to the Contractor or first-tier Subcontractor on the amount due shall equal three times the discount rate on 90-day commercial paper in effect at the Federal Reserve Bank in the Federal Reserve district that includes Oregon on the date that is 30 days after the date when payment was received from the Owner or from the Contractor, but the rate of interest shall not exceed 30 percent. The amount of interest may not be waived.

5.1.13 If the Contractor or a Subcontractor fails neglects or refuses to make payment to a person furnishing labor or materials in connection with the Work, the person may file a complaint with the Construction Contractors Board, unless payment is subject to a good faith dispute as defined in ORS 279C.505 and 279C.580.

5.1.14 The payment of a claim in the manner authorized in this Agreement shall not relieve the Contractor or the Contractor's surety from obligation with respect to any unpaid claims.

5.1.15 No person shall be employed by the Contractor or any Subcontractors, which are subject to the statutory limitations of Oregon law for more than ten (10) hours in any one (1) day, or 40 hours in any one

(1) week, except in cases of necessity, emergency, or where the public policy absolutely requires it, and in such cases, the employee shall be paid at least time and a half pay:

.1 For all overtime in excess of eight (8) hours a day or 40 hours in any one (1) week when the work week is five (5) consecutive days, Monday through Friday; or

.2 For all overtime in excess of ten (10) hours a day or 40 hours in any one (1) week when the work week is four (4) consecutive days, Monday through Friday; and

.3 For all Work performed on Saturday and on any legal holiday specified in ORS 279.334.

5.1.16 The Contractor shall give notice to employees in writing, either at the time of hire or before commencement of Work on the Project, or by posting a notice in a location frequented by employees, of the number of hours per day and days per week that the employees may be required to work. The Contractor shall include an identical provision in its subcontracts and require all Subcontractors, of any tier, to include an identical provision in all subcontracts.

5.1.17 The Contractor shall promptly, as and when due, make payment to any person, co-partnership, association or corporation, furnishing medical, surgical and hospital care or other needed care and attention, incident to sickness or injury, to the employees of the Contractor, of all sums which the Contractor agrees to pay for such services and all moneys and sums which Contractor collected or deducted from the wages of employees pursuant to any law, contract or agreement for the purpose of providing or paying for such service.

5.1.18 Every Subcontractor will comply with ORS 656.017, unless it is an exempt employer under ORS 656.126.

5.1.19 The Contractor is not a contributing member to the Public Employees' Retirement System and will be responsible for any and all federal, state and local taxes applicable to payments received under this Agreement. The Contractor will not be eligible for any benefits from these contract payments of federal Social Security, employment insurance, Workers' Compensation or the Public Employees' Retirement System.

5.1.20 The hourly rate of wage to be paid by the Contractor or every Subcontractor subject to prevailing wage rates to workers, shall be not less than the prevailing rate of wage for an hour's work in the same trade or occupation in the locality where such labor is performed.

5.1.21 The Contractor and every Subcontractor subject to prevailing wage rates to employees shall keep the prevailing wage rates for that project posted in a conspicuous and accessible place in or about the project.

5.1.22 The Contractor and every Subcontractor subject to prevailing wage rates to employees and shall also provide for or contribute to a health and welfare plan or a pension plan, or both, for its employees on the Project and shall post notice describing such plans in a conspicuous and accessible place in or about the Project. The notice preferably shall be posted in the same place as the notice required under 5.1.16. In addition to the description of the plans, the notice shall contain information on how and where to make claims and where to obtain further information.

5.1.23 The Contractor represents and agrees that the specifications contain a sufficient provision stating the existing prevailing rate of wage which must be paid to workers in each trade or occupation required for such public work employed in the performance of the Work either by the Contractor or any Subcontractor or other person doing or contracting to do the whole or any part of the Work contemplated by the contract. Such workers shall be paid not less than such specified minimum hourly rate of wage.

5.1.24 The District represents and agrees that the specifications contain a sufficient provision stating that a fee is required to be paid to the Commissioner of the Bureau of Labor and Industries as provided in ORS 279C.825. The fee shall be paid to the commissioner pursuant to the administrative rule of the commissioner.

5.1.25 The Contractor or the Contractor's surety and every Subcontractor or Subcontractor's surety subject to prevailing wage rates shall file certified statements with the Owner in writing in the form prescribed by the Commissioner of the Bureau of Labor and Industries, certifying the hourly rate of wage paid each worker which Contractor or the Subcontractor has employed upon such public work, and further certifying that no worker employed upon such public work has been paid less than the prevailing rate of wage or less than the minimum hourly rate of wage specified in the contract, which certificate and statement shall be verified by the oath of Contractor or the Contractor's surety or Subcontractor or the Subcontractor's surety that the Contractor or Subcontractor has read such statement and certificate and knows the contents thereof and that the same is true to the Contractor's or subcontractor's knowledge. The certified statements shall set out accurately and completely the payroll records for the prior week including the name and address of each worker, the worker's correct classification, rate of pay, daily and weekly number of hours worked, deductions made and actual wages paid. Each certified statement required shall be delivered or mailed by Contractor or the Subcontractor to the public contracting agency. Certified statements for each week, during which the Contractor or the Subcontractor employs a worker upon the Project shall be submitted once a month, by the fifth (5th) business day of the following month.

5.1.26 The Contractor or Subcontractor shall preserve the certified statements for a period of three (3) years from the date of completion of the contract.

5.1.27 Per ORS 279C.855, the Contractor represents and agrees that the Owner has fully and timely included a provision in the Contract Documents that the Contractor and any Subcontractor shall comply with ORS 279C.840 in the invitation for bids, the request for bids, the contract specifications, the accepted bid or elsewhere in the Contract Documents and that the Owner has no liability for unpaid minimum wages.

5.1.28 Owner shall make progress payments on the contract monthly as Work progresses. Payments shall be based upon estimates of Work completed that are approved by the Owner. A progress payment shall not be considered acceptance or approval of any Work or waiver of any defects therein. In instances when an invoice is filled out incorrectly, or when there is any defect or impropriety in any submitted invoice or when there is a good faith dispute, the Owner shall so notify the Contractor within 15 days stating the reason or reasons the invoice is defective or improper or the reasons for the dispute. A defective or improper invoice, if corrected by the Contractor within seven days of being notified by the Owner, shall not cause a payment to be made later than specified in this section.

5.1.29 If requested in writing by a first-tier Subcontractor, Contractor, within ten (10) calendar days after receiving the request, shall send to the first-tier Subcontractor a copy of that portion of any invoice, request for payment submitted to the Owner or pay document provided by the Owner to the Contractor specifically related to any labor or materials supplied by the first-tier Subcontractor.

5.1.30 Payment of interest may be postponed when payment on the principal is delayed because of disagreement between Owner and Contractor.

5.1.31 The Owner may reserve as retainage from any progress payment an amount not to exceed five percent of the payment. As Work progresses, the Owner may in its sole discretion reduce the amount of the retainage and the Owner may in its sole discretion eliminate retainage on any remaining monthly contract payments after 50 percent of the Work under the contract is completed if, in the Owner's sole opinion, such Work is progressing satisfactorily. Elimination or reduction of retainage shall be allowed only upon written application by the Contractor, which application shall include written approval of the Contractor's surety; except that when the contract Work is 97-1/2 percent completed the Owner may, at its

discretion and without application by the Contractor, reduce the retained amount to 100 percent of the value of the Work remaining to be done. Upon receipt of a written application by the Contractor, the Owner shall respond in writing within a reasonable time.

5.1.32 The retainage held by the Owner shall be included in and paid to the Contractor as part of the final payment of the contract price. The Contractor shall notify the Owner in writing when the Contractor considers the Work complete and the Owner shall, within 15 days after receiving the written notice, either accept the Work or notify the Contractor of Work yet to be performed on the contract.

5.1.33 The Contractor shall not request payment from the Owner of any amount withheld or retained in accordance herewith.

5.1.34 Such time as the Contractor has determined and certified to the Owner that the Subcontractor is entitled to the payment of such amount. A dispute between the Contractor and a first-tier Subcontractor relating to the amount or entitlement of a first-tier Subcontractor to a payment or a late payment interest penalty under a clause included in the subcontract pursuant to the terms hereof does not constitute a dispute to which the Owner is a party. The Owner shall not be included as a party in any administrative or judicial proceeding involving such a dispute. The Contractor shall include in each subcontract for property or services entered into by the Contractor and a first-tier Subcontractor, including a material supplier, for the purpose of performing a construction contract:

.1 A payment clause that obligates the Contractor to pay the first-tier Subcontractor for satisfactory performance under its subcontract within ten (10) days out of such amounts as are paid to the Contractor by the Owner under such contract; and

.2 An interest penalty clause that obligates the Contractor, if payment is not made within 30 days after receipt of payment from the Owner, to pay to the first-tier Subcontractor an interest penalty on amounts due in the case of each payment not made in accordance with the payment clause included in the subcontract pursuant to subparagraph .1 of this 5.1.34. The Contractor or first-tier Subcontractor shall not be obligated to pay an interest penalty if the only reason that the Contractor or first-tier Subcontractor did not make payment when payment was due is that the Contractor or first-tier Subcontractor did not receive payment from the Owner or the Contractor when payment was due. The interest penalty shall be:

(A) For the period beginning on the day after the required payment date and ending on the date on which payment of the amount due is made; and

(B) Computed at the rate specified in ORS 279C.515(2).

5.1.35 The Contractor shall include in each of its subcontracts, for the purpose of performance of such contract condition, a provision requiring the first-tier Subcontractor to include a payment clause and an interest penalty clause conforming to the standards of 5.1.33 in each of its subcontracts and to require each of its Subcontractors to include such clauses in their subcontracts with each lower-tier Subcontractor or supplier.

5.1.36 If the Contractor is an employer, the Contractor is a subject employer under Oregon's Workers' Compensation Law and shall comply with ORS 656.017 and shall provide Workers' Compensation coverage for all their "subject workers" as defined in ORS Chapter 656.

5.1.37 The Contractor and all Subcontractors subject to licensing with the Oregon Construction Contractors Board shall be duly licensed therewith at the time they bid any Work, enter into any contract to perform any Work, perform any Work and at all times under which any warranty or repair obligation applies. The Contractor and all Subcontractors performing any Work which requires any other governmental licensing,

such as those with the Elevator and Electrical Board, Plumbing Board or Landscape Contractors Board, shall be duly licensed with all appropriate governmental agencies at the time they bid any Work, enter into any contract to perform any Work, perform any Work and at all times under which any warranty or repair obligation applies.

5.1.38 If federal funds are involved, federal laws, rules and regulations applicable to the grant shall govern in the event they conflict with any provision of this Agreement or other required by law. The Contractor certifies that it is not currently employed by the federal government. This provision does not preclude the Contractor from holding another contract with the federal government.

5.1.39 The Contractor shall timely provide the Owner its name, address, social security, federal employee identification number and such other information as the Department of Revenue may require or request.

5.1.40 The Contractor shall comply and require all Subcontractors to comply with the applicable requirements of all laws, codes, ordinances, regulations and statutes, including but not limited to those in ORS Chapters 279A, B and C. To the extent that ORS Chapters 279A, B and C, or any other law, code, ordinance or regulations, requires any tender or condition to be included in this Agreement, such tender or condition is hereby incorporated by this reference. Nothing contained herein shall be construed so as to require the commission of any act contrary to law, code, rule, statute, ordinance or regulation, and wherever there is any conflict between any provisions contained herein and any statute, law, code, ordinance, rule or regulation the provision of this Agreement which is affected shall be curtailed and limited only to the extent necessary to bring it within the requirements of the law, code, rule, statute, ordinance or regulation.

5.1.41 If the Contractor is a foreign Contractor and the contract price exceeds $10,000, the Contractor shall promptly report to the Department of Revenue on forms to be provided by the Department of Revenue the total contract price, terms of payment, length of contract and such other information as the Department of Revenue may require before final payment can be received on the public contract. For purposes of this A.3 I, a foreign Contractor is one who is not domiciled in or registered to do business in the State of Oregon.

5.1.42 The Contractor represents and agrees that the bid documents make sufficient specific reference to federal, state and local agencies that have enacted ordinances or regulations dealing with the prevention of environmental pollution and the preservation of natural resources that affect the performance of the contract and have allocated all known environmental and natural resource risks to the Contractor by listing such environmental and natural resource risks with specificity in the bid documents.

5.1.43 The Contractor shall not discriminate against minority, women or emerging small business enterprises in the awarding of subcontracts. The Contractor shall certify that the Contractor has not and will not discriminate against minority, women, or emerging small business enterprises in obtaining any required subcontracts.

5.1.44 The Contractor shall use recyclable products to the maximum extent economically feasible in the performance of the Contract Work set forth in this document.

5.1.45 As referenced herein, an employee drug testing policy shall be as follows:

.1 The Contractor or Subcontractor shall have in place at the time of the execution of this Contract, and shall maintain during the term of this Contract, a Qualifying Employee Drug Testing Program for its employees that includes, at a minimum, the following:

(A) A written employee drug testing policy;

(B) Required drug testing for all new Subject Employees or, alternatively, required testing of all Subject Employees every 12 months on a random selection basis; and

(C) Required testing of a Subject Employee when the Contractor or Subcontractor has reasonable cause to believe the Subject Employee is under the influence of drugs.

A drug testing program that meets the above requirements will be deemed a "Qualifying Employee Drug Testing Program." For the purposes of this section an employee is a "Subject Employee" only if that employee will be working on the Project job site.

.2 The Contractor shall require each Subcontractor providing labor for the Project to:

(A) Demonstrate to the Contractor that it has a Qualifying Employee Drug Testing Program for the Subcontractor's Subject Employees, and represent and warrant to the Contractor that the Qualifying Employee Drug Testing Program is in place at the time of subcontract execution and will continue in full force and effect for the duration of the subcontract; or

(B) Require that the Subcontractor's Subject Employees participate in Contractor's Qualifying Employee Drug Testing Program for the duration of the subcontract.

5.2 FINAL PAYMENT

5.2.1 Final payment, constituting the entire unpaid balance of the Contract Sum, shall be made by the Owner to the Contractor when:

.1 A final Certificate for Payment has been issued by the Owners Delegated Representative.

5.2.2 The Owner's final payment to the Contractor shall be made no later than 30 days after the issuance of the Owners Delegated Representative's final Certificate for Payment.

ARTICLE 6 TERMINATION OR SUSPENSION

6.1 The Contract may be terminated by the Owner or the Contractor as provided in Article 14 of the General Conditions.

6.2 The Work may be suspended by the Owner as provided in Article 14 of the General Conditions.

6.3 The Owner shall, in addition to the Right to Stop the Work, have the right to require that the Contractor replace or remove construction personnel assigned to the Work, if, in the Owner’s sole determination, specific construction personnel are impairing or impeding the prosecution of the Work.

ARTICLE 7 MISCELLANEOUS PROVISIONS

7.1 Where reference is made in this Agreement to a provision of the General Conditions or another Contract Document, the reference refers to that provision as amended or supplemented by other provisions of the Contract Documents.

7.2 Payments due and unpaid under the Contract shall bear interest from the date payment is due at the rate stated below, or in the absence thereof, at the legal rate prevailing from time to time at the place where the Project is located.

7.3 The Owner's representative is: Brandon Reid, Project Manager, HMK Company. The Owner may change this representative at any time.

7.4 The Contractor's Representative is: _____.

7.5 Neither the Owner's nor the Contractor's Representative shall be changed without ten (10) days written notice to the other party.

7.6 CONTRACTOR'S CONSTRUCTION SCHEDULES

7.6.1 Within ten (10) days after issuance of the Notice to Proceed, the Contractor shall submit a preliminary schedule of the Work. Within 30 days after issuance of the Notice to Proceed, and before any progress payment need be made, the Contractor, after consultations with its Subcontractors and Suppliers of any tier, shall submit six copies of a Contractor's Construction Schedule to the Owners Delegated Representative and one copy to the Owner. Not less than ten percent of the Progress Payment may be withheld until a Contractor's Construction Schedule in a form satisfactory to the Owners Delegated Representative and Owner has been submitted. Neither the Owner nor the Owners Delegated Representative will review the substance of the Contractor's Construction Schedule.

7.6.2 The Contractor's Construction Schedule shall be based upon a critical path method ("CPM") analysis of construction activities and sequence of operations needed for the orderly performance and completion of all separable parts of the Work in accordance with the Contract and within the Contract Time. The schedule shall be a critical path method type in the form of a precedence diagram and activity listing and shall be time-scaled. It shall include the Notice to Proceed date, the Date(s) of Substantial Completion, and the Date(s) of Final Completion in accordance with the Contract Documents. The Critical Path shall be clearly indicated on the Contractor's Construction Schedule. No more than 20% of the progress activities shall be on the critical path, and no more than 30% shall have less than five days of float. The value of any single activity shall not exceed $50,000, except that 5% of the total activities may exceed this limit without prior approval. The time-scaled network diagram shall be summarized on a single sheet not to exceed 11"x 17".

7.6.2.1 The network diagram shall show in detail and in order the sequence of all significant activities, their descriptions, start and finish dates, durations and dependencies, necessary to complete all Work and any separable parts thereof. The activity listing shall show the following information for each activity on the network diagram:

.1 Description;

.2 Duration (not to exceed fifteen working days);

.3 Craft;

.4 Equipment (including hours of usage);

.5 Start and finish dates;

.6 Total float time and free float time;

.7 Dates that work must be performed and completed by other Contractors or Subcontractors to support the Work and the interfaces with such other Contractors; and

.8 Cost-loading, correlated to the Schedule of Values, which, upon approval, shall be used as a basis for determining action on progress payments throughout the Project.

7.6.2.2 A schedule for the purchase and receipt of items required for performance of the Work, showing lead times between purchase order placement and delivery dates, shall be integrated with the Contractor's Construction Schedule. The Contractor shall furnish the Owners Delegated Representative with copies of all purchase orders and acknowledgments and fabrication, production, and shipping schedules for all major items on the critical path within ten days of the Contractor's receipt of each purchase order, acknowledgment or schedule. Neither the Owners Delegated Representative nor the Owner shall be deemed to have approved or accepted any such material, or its schedule, nor deemed to have waived this requirement if some or all of the material is not received.

7.6.2.3 Milestone completion dates shall be clearly defined on the Contractor's Construction Schedule.

7.6.2.4 If abbreviations are used in the Contractor's Construction Schedule, a legend shall be provided to define all abbreviations.

7.6.2.5 The Contractor shall prepare and keep current a schedule of submittals, coordinated with the Contractor's Construction Schedule, which allows the Owners Delegated Representative at least ten (10) days to review the submittals.

7.6.2.6 The Progress Schedules shall be submitted as both a paper copy and in electronic format using the latest version of Microsoft Project. The Contractor may request to use different project management software, such as, Suretrak, but must first receive approval from the Owner, by demonstrating its capabilities. This can be accomplished by submitting a sample CPM printout of similar scope. If the alternative software is accepted, the Contractor will be required to supply the Owner an authorized copy of the software with all user support manuals.

7.6.2.7 At each monthly meeting with the Owner, the Contractor shall submit (a) a bar chart schedule showing the activities planned for the next month, and (b) a report showing actual starts and finishes from the previous month. The bar-chart schedule shall show all Work activities numbered according to the CPM, any submittal or delivery activities with less than five (5) days, one (1) float, and any permitting, testing, or inspection activities by others.

7.6.3 Within ten days after receipt by the Owners Delegated Representative, two copies of the Contractor's Construction Schedule will be returned to the Contractor with comments, following review by the Owner. Review by the Owner and Owners Delegated Representative of the Contractor's Construction Schedule shall not constitute an approval or acceptance of the Contractor's construction means, methods, or sequencing, or its ability to complete the Work in a timely manner.

7.6.4 The Contractor shall utilize and comply with the Contractor's Construction Schedule. The Contractor shall not be entitled to any adjustment in the Contract Time, the Contractor's Construction Schedule, or the Contract Sum, or to any additional payment of any sort by reason of the loss or use of any float time, including time between the Contractor’s anticipated completion date and end of the Contract Time, whether or not the float time is described as such on the Contractor’s Construction Schedule.

7.6.5 Should the Contractor fail to meet any scheduled date as shown on the current Contractor's Construction Schedule, the Contractor shall, if requested, be required at its own expense to submit within ten days of the request an updated Contractor's Construction Schedule. If the Contractor's progress indicates to the Owner that the Work will not be Substantially Completed within the Contract Time, the Contractor shall, at its own expense, increase its work force and / or working hours to bring the actual completion dates of the activities into conformance with the Contractor's Construction Schedule and Substantial Completion within the Contract Time. The Contractor shall also submit a revised Contractor's Construction Schedule at its own expense within ten days of notice from the Owners Delegated Representative that the sequence of Work varies significantly from that shown on the Contractor's

Construction Schedule. Neither the Owner nor the Owners Delegated Representative will, however, review the substance or sequence of the Contractor's Construction Schedule.

7.6.6 Schedule Float Utilization. Float belongs to the benefit of the Project for the Owner's use and no float shall be used without the Owner's written approval. Any float time to activities not on the critical path shall be used by the Contractor to optimize its construction process. Any float time between the end of the final construction activity and the final completion date shall be used by the Owner in determining if additional contract days are to be awarded for changes in the contract or for delays to the contract caused by the Owner. The Contractor will not be entitled to any adjustment in the Contract Time, the Construction Schedule, or the Contract Sum, or to any additional payment of any sort by reason of the Owner's use of float time between the end of the final construction activity and the final completion date.

7.6.7 Delays. The Contractor shall, within seven days of the event, notify the Owner and Owners Delegated Representative in writing of any proposed changes in the Contractor's Construction Schedule or the Contract Time and of any event which could delay performance or supplying of any item of the Work and shall indicate the expected duration of the delay, the anticipated effect of the delay on the Contractor's Construction Schedule, and the action being taken to correct the delay situation. In the event the Contractor is entitled to a change in the Contract Time, the adjustment to the Contract Time shall be limited to the change in the critical path of construction activities.

7.6.8 Final Completion. The Contractor shall attain Final Completion of the Work in accordance with the Contract within 60 days after the date of Substantial Completion.

7.6.9 Meetings. During the period commencing with the issuance of Notice to Proceed and ending with the date of Final Completion of the Work, the Contractor shall attend and participate in and ensure applicable Subcontractors of any tier and Suppliers attend and participate in:

.1 A pre-contract meeting;

.2 A pre-construction meeting;

.3 Regular weekly Project status meetings scheduled by the Owner or by the Owners Delegated Representative to review progress of the Work, to discuss the Contractor's progress reports, to obtain necessary Owner's or Owners Delegated Representative's approvals, and generally to keep the Owner and Owners Delegated Representative informed and involved in the progress of the Project; and

.4 Regular on-site meetings scheduled by the Owner or by the Owners Delegated Representative to review progress of the Work and other pertinent matters.

7.7 Any and all references to "Engineer" or "the Engineer" in this Agreement or in the General Conditions of the Contract shall be deemed for all purposes to mean and refer to: Owners Delegated Representative.

7.8 If any provision of this Agreement or application thereof to any extent shall be invalid or unenforceable the remainder of the Agreement or its application thereof shall not be affected thereby and the provision or application shall be enforced to the fullest extent permitted by law.

7.9 The Contractor shall not assign this Agreement without the prior written permission of the Owner. Contractor shall assign to Owner any and all rights that the Contractor now has or hereafter may acquire pursuant to a contract related to the Project which rights the Owner shall thereafter be entitled to assign to another person or entity including without limitation any Lender, upon the request of the Owner, provided, however, until the exercise of such rights of assignment by the Owner, there shall be no privity or contractual relationship between the Owner and such persons and entities. The Contractor hereby consents to the

free assignment of this Agreement in whole or in part by the Owner to any other person or entity including but not limited to any Lender.

7.10 The Contractor represents and warrants to the Owner who relies thereon as follows:

.1 It and all of its Subcontractors are financially solvent, able to pay debts as they become due and have sufficient working capital to timely perform and complete all obligations related to the Project.

.2 That it is able to timely and completely furnish all the labor, material, equipment and services to necessary to fully complete the Work within the Contract Time.

.3 It and all of its Subcontractors are duly and properly licensed with the Oregon Construction Contractors Board and all other governmental agencies and are signatories to collective bargaining agreements.

.4 It has visited the site, undertaken any and all tests it deems advisable, is familiar with the structure and that it is unaware of any potential condition with would increase the Contract Sum or Contract Time.

.5 It and all of its Subcontractors possess a high level of experience and expertise in projects similar to the Project.

.6 Neither Contractor nor any of its Subcontractors are "exempt" from the requirement to provide Workers' Compensation Insurance under Oregon law.

.7 It is fully authorized to execute this Agreement and perform all the obligations required of it hereunder.

7.11 The representations and warranties of 7.11 are in addition to and not in lieu of any other obligation or law and survive the execution of this Agreement and final completion of the Project.

ARTICLE 8 ENUMERATION OF CONTRACT DOCUMENTS

8.1 The Contract Documents, except for Modifications issued after execution of this Agreement, are enumerated as follows:

.1 This Agreement.

.2 The General Conditions.

.3 The Supplementary and other Conditions of the Contract.

.4 The Specifications are those contained in the Project Manual dated **November 21, 2022.**

.5 The Drawings are bound in the project manual.

.6 The Addenda, if any, are as follows:

Portions of Addenda relating to bidding requirements are not part of the Contract Documents unless the bidding requirements are also enumerated in this Article 8.

8.1.7 Other documents, if any, forming part of the Contract Documents are as follows:

a. Exhibits _____

This Agreement is entered into as of the day and year first written above and is executed in at least three original copies, of which one is to be delivered to the Contractor, one to the Owners Delegated Representative for use in the administration of the Contract, and the remainder to the Owner.

CONTRACTOR		**JACKSON COUNTY SCHOOL DISTRICT 5**	
By:	_____	**By:**	_____
			Scott Whitman
Title:	_____	**Title:**	**Director of Business Services**
Date:	_____	**Date:**	_____
Federal ID #:	_____		

ARTICLE 1 GENERAL PROVISION

1.1 BASIC DEFINITIONS

1.1.1 THE CONTRACT DOCUMENTS

The Contract Documents consist of the Agreement between Owner and Contractor (hereinafter the Agreement), the Request for Bids or Proposals. Conditions of the Contract (General, Supplementary and other Conditions), Drawings, Specifications, and Addenda issued prior to execution of the Contract, other documents listed in the Agreement and Modifications issued after execution of the Contract. A Modification is (1) a written amendment to the Contract signed by both parties, (2) a Change Order, (3) a Construction Change Directive or (4) a written order for a minor change in the Work issued by the Consultant. Contractor acknowledges and represents that it has examined all Contract Documents and will examine all Contract Documents created after execution of the Agreement. Contractor represents that such Contract Documents are suitable and sufficient to enable Contractor to timely complete the Work for the Contract Sum within the Contract Time.

1.1.2 THE CONTRACT

The Contract Documents form the Contract for Construction. The Contract represents the entire and integrated agreement between the parties hereto and supersedes prior negotiations, representations or agreements, either written or oral. The Contract may be amended or modified only by a Modification. The Contract Documents shall not be construed to create a contractual relationship of any kind (1) between the Consultant and Contractor, (2) between the Owner and any Subcontractor, including, but not limited to, any Sub-subcontractor, (3) between the Owner and Consultant or (4) between any persons or entities other than the Owner and Contractor. The Consultant shall, however, be entitled to performance and enforcement of obligations under the Contract intended to facilitate performance of the Consultant's duties.

1.1.3 THE WORK

The term "Work" means the construction and services required by the Contract Documents, whether completed or partially completed, and includes any and all labor (including, but not limited to, supervision and management), transportation, materials, equipment and services provided or to be provided by the Contractor to timely fulfill the Contractor's obligations and render the Project complete and usable for its intended purpose. The Work includes all labor, material, equipment and services incidental to or which may be inferred from any of the Contract Documents. The Work may constitute the whole or a part of the Project.

1.1.4 THE PROJECT

The Project is the total construction of which the Work performed under the Contract Documents may be the whole or a part and which may include construction by the Owner or by separate contractors.

1.1.5 THE DRAWINGS

The Drawings are the graphic and pictorial portions of the Contract Documents showing the design, location and dimensions of the Work, generally including plans, elevations, sections, details, schedules and diagrams.

1.1.6 THE SPECIFICATIONS

The Specifications are that portion of the Contract Documents consisting of the written requirements for materials, equipment, systems, standards and workmanship for the Work, and performance of related services.

1.1.7 THE PROJECT MANUAL

The Project Manual is a volume assembled for the Work which may include the bidding requirements, sample forms, Conditions of the Contract and Specifications.

1.2 CORRELATION AND INTENT OF THE CONTRACT DOCUMENTS

1.2.1 The intent of the Contract Documents is to include all items necessary for the proper execution and completion of the Work by the Contractor. The Contract Documents are complementary, and what is required by one shall be as binding as if required by all; performance by the Contractor shall be required only to the extent consistent with the Contract Documents and reasonably inferable from them as being necessary to produce the indicated results. In case of any conflict in the requirements of the Contract Documents, the Contractor is deemed to have included the better Quality and larger Quantity of the Work.

1.2.2 Organization of the Specifications into divisions, sections and articles, and arrangement of Drawings shall not control the Contractor in dividing the Work among Subcontractors or in establishing the extent of Work to be performed by any trade.

1.2.3 Unless otherwise stated in the Contract Documents, words which have well-known technical or construction industry meanings are used in the Contract Documents in accordance with such recognized meanings.

1.3 CAPITALIZATION

1.3.1 Terms capitalized in these General Conditions include those which are (1) specifically defined, (2) the titles of numbered articles and identified references to Paragraphs, Subparagraphs and Clauses in the document or (3) the titles of other documents.

1.4 INTERPRETATION

1.4.1 In the interest of brevity the Contract Documents frequently omit modifying words such as "all" and "any" and articles such as "the" and "an," but the fact that a modifier or an article is absent from one statement and appears in another is not intended to affect the interpretation of either statement.

1.5 EXECUTION OF CONTRACT DOCUMENTS

1.5.1 The Contract Documents shall be signed by the Owner and Contractor. If either the Owner or Contractor or both do not sign all the Contract Documents, the Consultant shall identify such unsigned Documents upon request.

1.5.2 Execution of the Agreement by the Contractor is a representation that the Contractor has visited the site, become fully familiar with the nature, location and character of the site and surrounding areas, weather conditions, availability of labor, materials, equipment and services, site conditions, surface conditions, subsurface conditions, the Contract Documents, existing local conditions under which the Work is to be performed, the time period for performance and completion of the Work. Contractor represents that it has performed personal observations and correlated the observations with the requirements of the Contract Documents such that the Contractor is not aware of any discrepancies, omissions, ambiguities or conflicts in or among any of the Contract Documents.

1.6 OWNERSHIP AND USE OF DRAWINGS, SPECIFICATIONS AND OTHER INSTRUMENTS OF SERVICE

1.6.1 The Drawings, Specifications and other documents, including any in electronic form, prepared by the Consultant and the Consultant's consultants are documents through which the Work to be executed by the Contractor is described. The Contractor may retain one record set. Neither the Contractor nor any

Subcontractor, including, but not limited to, any Sub-subcontractor or material or equipment supplier shall own or claim any intellectual property rights in the Drawings, Specifications and other documents prepared by the Consultant or the Consultant's consultants. All copies of the documents, except the Contractor's record set, shall be returned or suitably accounted for to the Consultant, on request, upon completion of the Work. The Drawings, Specifications and other documents prepared by the Consultant and the Consultant's consultants, and copies thereof furnished to the Contractor, are for use solely with respect to this Project. They are not to be used by the Contractor or any Subcontractor, including, but not limited to, any Sub-subcontractor or material or equipment supplier on other projects or for additions to this Project outside the scope of the Work without the specific written consent of the Owner, Consultant and the Consultant's consultants. The Contractor, Subcontractors, including, but not limited to, any Sub-subcontractors and material or equipment suppliers are authorized to use and reproduce applicable portions of the Drawings, Specifications and other documents prepared by the Consultant and the Consultant's consultants appropriate to and for use in the execution of their Work under the Contract Documents only. All copies made under this authorization shall bear the statutory copyright notice, if any, shown on the Drawings, Specifications and other documents prepared by the Consultant and the Consultant's consultants. Submittal or distribution to meet official regulatory requirements or for other purposes in connection with this Project is not to be construed as publication in derogation of the any intellectual property right or other reserved rights.

ARTICLE 2 OWNER

2.1 GENERAL

2.1.1 The Owner is the entity identified as such in the Agreement and is referred to throughout the Contract Documents. The Owner may designate in writing a representative who subject to the limitations provided by law, shall have express authority to bind the Owner with respect to all matters requiring the Owner's approval or authorization. Except as otherwise provided in Subparagraph 4.1, the Consultant does not have such authority. The term "Owner" means the Owner or the Owner's Authorized Representative.

2.2 INFORMATION AND SERVICES REQUIRED OF THE OWNER

2.2.1 Except for permits and fees, including those required under Subparagraph 3.7, which are the responsibility of the Contractor under the Contract Documents, the Owner shall secure and pay for necessary approvals, easements, assessments and charges required for construction, use or occupancy of permanent structures or for permanent changes in existing facilities.

2.3 OWNER'S RIGHT TO STOP THE WORK

2.3.1 If the Contractor fails to correct Work which is not in accordance with the requirements of the Contract Documents as required by Paragraph 1.1.3, or persistently fails to carry out Work in accordance with the Contract Documents, the Owner may issue a written order to the Contractor to stop the Work, or any portion thereof, until the cause for such order has been eliminated; however, the right of the Owner to stop the Work shall not give rise to a duty on the part of the Owner to exercise this right for the benefit of the Contractor or any other person or entity, nor give rise to any claim for additions to the Contract Sum or Contract Time.

2.3.2 The Owner shall, in addition to the Right to Stop the Work, have the right to require that the Contractor replace or remove construction personnel assigned to the Work, if, in the Owner’s sole determination, specific construction personnel are impairing or impeding the prosecution of the Work.

2.4 OWNER'S RIGHT TO CARRY OUT THE WORK

2.4.1 If the Contractor defaults or neglects to carry out the Work in accordance with the Contract Documents and fails within a seven-day period after receipt of written notice from the Owner to commence and continue correction of such default or neglect with diligence and promptness, the Owner may, immediately without

prejudice to other remedies the Owner may have, correct such deficiencies. In such case an appropriate Change Order shall be issued deducting from payments then or thereafter due the Contractor the reasonable cost of correcting such deficiencies, including Owner's expenses and compensation for the Consultant's additional services made necessary by such default, neglect or failure. Such change order shall be deemed signed by the Contractor for the purposes of this Agreement even if the Contractor fails to physically sign such Change Order. If payments then or thereafter due the Contractor are not sufficient to cover such amounts, the Contractor shall promptly pay the difference to the Owner. The rights stated herein shall be in addition to and not in lieu of any rights afforded the Owner.

ARTICLE 3 CONTRACTOR

3.1 GENERAL

3.1.1 The Contractor is the person or entity identified as such in the Agreement and is referred to throughout the Contract Documents as if singular in number. The term "Contractor" means the Contractor or the Contractor's Authorized Representative.

3.1.2 The Contractor shall perform and complete the Work in accordance with the Contract Documents for the Contract Sum and within the Contract Time.

3.1.3 The Contractor shall not be relieved of obligations to perform the Work in accordance with the Contract Documents either by activities or duties of the Consultant in the Consultant's administration of the Contract, or in the performance of its obligations or by tests, inspections or approvals required or performed by persons other than the Contractor.

3.2 REVIEW OF CONTRACT DOCUMENTS AND FIELD CONDITIONS BY CONTRACTOR

3.2.1 Since the Contract Documents are complementary, before starting each portion of the Work, the Contractor shall carefully study and compare the various Drawings and other Contract Documents relative to that portion of the Work, as well as the information furnished by the Owner, shall take field measurements of any existing conditions, including all general reference points and interfering site conditions related to that portion of the Work and shall observe any conditions at the site affecting it and shall carefully compare such field measurements and conditions and other information known to the Contractor with the Contract Documents before commencing such activities. These obligations are for the purpose of facilitating construction by the Contractor and are not for the purpose of discovering errors, omissions, or inconsistencies in the Contract Documents; however, any errors, inconsistencies or omissions known, recognized or discovered by the Contractor shall be reported promptly to the Consultant in writing as a request for information in such form as the Consultant may require.

3.2.2 Any design errors or omissions noted by the Contractor during this review shall be reported promptly to the Consultant in writing, but it is recognized that the Contractor's review is made in the Contractor's capacity as a contractor and not as a licensed design professional unless otherwise specifically provided in the Contract Documents. The Contractor is not required to ascertain that the Contract Documents are in accordance with applicable laws, statutes, ordinances, building codes, and rules and regulations, but any nonconformity recognized discovered by or made known to the Contractor shall be reported promptly to the Consultant in writing. The accuracy of grades, elevations, dimensions, locations or otherwise of existing conditions are not warranted to be accurate. The Contractor is solely responsible for verifying the accuracy of grades, elevations, dimensions, locations or otherwise of existing conditions prior to entering in to the Contract.

3.2.3 If the Contractor believes that additional cost or time is involved because of clarifications or instructions issued by the Consultant in response to the Contractor's notices or requests for information pursuant to Subparagraphs 3.2.1 and 3.2.2, the Contractor shall make Claims as provided in Subparagraphs 4.3.6 and 4.3.7. If the Contractor fails to perform the obligations of Subparagraphs 3.2.1 and 3.2.2, the Contractor shall pay such costs and damages to the Owner as would have been avoided if

the Contractor had performed such obligations. Except as provided herein, the Contractor shall not be liable to the Owner or Consultant for damages resulting from errors, inconsistencies or omissions in the Contract Documents or for differences between field measurements or conditions and the Contract Documents unless the Contractor discovered, had knowledge of, recognized or should have recognized such error, inconsistency, omission or difference and failed to report it to the Owner and to the Consultant or accepted the responsibility to verify the same. If the Contractor performs any construction activity it knows or reasonably should have known involves an error, inconsistency or omission in the Contract Documents or reports referenced therein without such notice to the Owner and the Consultant, the Contractor shall assume responsibility for such performance and shall bear the costs attributed to the correction.

3.2.4. In addition to and not in derogation of the Contractor's duties the Contractor shall take all field measurements and verify all field conditions and shall carefully compare such field measurements and conditions with all other information known to the Contractor or included in any of the Contract Documents before commencing any construction activity for the Work. The Owner shall not be liable for any errors, inconsistencies or omissions which should have been reasonably discovered and the Contractor shall report in writing to the Consultant and Owner any errors, inconsistencies or omissions.

3.2.5. Any investigations of subsurface conditions have been made for design purposes only. The results of these investigations may be available for the convenience of the Bidders and the Sub-bidders but are not a part of the Contract Documents. While the Contractor may rely on such investigation results there is no representations or warranties, express or implied that the conditions indicated are representative of those existing at the site or that unforeseen developments may not occur. The Contractor is solely responsible for reasonably interpreting the information and extrapolating beyond the location of each individual boring, test pit, or other testing location.

3.2.6. The Contractor shall do no work without applicable Drawings, Specifications, or written modifications or, where required, Shop Drawings, Product Data, or Samples, unless instructed to do so in writing by the Consultant and Owner.

3.3 SUPERVISION AND CONSTRUCTION PROCEDURES

3.3.1 The Contractor shall supervise and direct the Work, using the Contractor's best skill and attention. The Contractor shall be solely responsible for and have control over construction means, methods, techniques, sequences and procedures and for coordinating all portions of the Work under the Contract. Contractor shall review any specified construction or installation procedure and shall advise the Owner and the Consultant in writing if the specified procedure deviates from acceptable construction practices will impact any warranty or if the Contractor has any objection thereto.

3.3.2 The Contractor shall be responsible to the Owner for acts and omissions of the Contractor's employees, Subcontractors, of any tier, and their agents and employees, and any other persons or entities performing portions of the Work for or on behalf of the Contractor or any Subcontractors of any tier and for any damages, losses, costs and expenses resulting from such acts or omissions.

3.3.3 The Contractor shall be responsible for inspection of portions of Work already performed to determine that such portions are in proper condition to receive subsequent Work.

3.3.4. The Contractor shall inspect, prior to installation, all materials and equipment delivered to, installed at, or fabricated at the site and shall reject that which will not conform to the Contract Documents when fully and properly installed.

3.4 LABOR AND MATERIALS

3.4.1 Unless otherwise provided in the Contract Documents, the Contractor shall provide and pay for labor, materials, equipment, tools, telephone, data transmission, construction equipment and machinery, water, heat, utilities, transportation, and other facilities and services necessary for proper execution and completion of the Work, whether temporary or permanent and whether or not incorporated or to be incorporated in the Work.

3.4.2 The Contractor may make substitutions only with the written consent of the Owner, after evaluation by the Consultant and in accordance with a Change Order.

3.4.3 The Contractor shall enforce strict discipline and good order among the Contractor's employees and other persons carrying out the Contract. The Contractor shall not permit employment of unfit persons or persons not skilled in tasks assigned to them.

3.5 WARRANTY

3.5.1 The Contractor warrants to the Owner and Consultant that the Work, including, but not limited to, any and all materials and equipment furnished under the Contract will be of good quality and new unless otherwise required or permitted by the Contract Documents, that the Work will be free from defects not inherent in the quality required or permitted, and that the Work will conform to the requirements of the Contract Documents. Work not conforming to these requirements, including substitutions not properly approved and authorized, may be considered defective. The Contractor's warranty excludes remedy for damage or defect caused by abuse, modifications not executed by the Contractor, improper or insufficient maintenance, improper operation, or normal wear and tear and normal usage. If required by the Consultant, the Contractor shall furnish satisfactory evidence as to the kind and quality of materials and equipment. In addition, the Contractor assigns to the Owner any and all warranties. The Contractor further warrants that all construction activity of the Work shall be performed on the Work so as to preserve all such warranties. To the extent that any warranty is non-assignable, Contractor warrants that it will pursue such warranty claim for the use and benefit of the Owner without cost or expense to the owner. The Contractor shall require this provision to be included in all subcontracts of any tier.

3.6 TAXES

3.6.1 The Contractor shall pay as and when due_sales, consumer, property, occupational, Social Security benefits, unemployment compensation, use and similar taxes, excises, duties and assessments for the Work provided by the Contractor.

3.7 PERMITS, FEES AND NOTICES

3.7.1 Unless otherwise provided in the Contract Documents, the Contractor shall secure and pay for the building permit and other permits and governmental fees, licenses and inspections necessary for proper execution and completion of the Work which are customarily secured after execution of the Contract and which are legally required when bids are received, negotiations concluded or the Contract is executed. To the extent that there is any difference in these requirements the most stringent requirements on the Contractor shall apply.

3.7.2 The Contractor shall comply with and give notices required by laws, ordinances, rules, regulations and lawful orders of public authorities applicable to performance of the Work. If the Contractor fails to comply or give such notices it will be liable for and shall to the fullest extent permitted by law defend indemnify and hold the Owner and Consultant and their respective employees, officers and agents harmless from any costs, loss, penalty or damage.

3.7.3 Except as otherwise provided herein, it is not the Contractor's responsibility to ascertain that the Contract Documents are in accordance with applicable laws, statutes, ordinances, building codes, and rules and regulations. However, if the Contractor becomes aware, gains knowledge, recognizes or observes that

portions of the Contract Documents are at variance therewith, the Contractor shall promptly notify the Consultant and Owner in writing, and necessary changes shall be accomplished by appropriate Modification.

3.7.4 If the Contractor performs Work knowing the construction activity to be contrary to laws, statutes, ordinances, building codes, and rules and regulations without such notice to the Consultant and Owner, the Contractor shall assume appropriate responsibility for such Work and shall bear the costs, loss, damages and penalties attributable to correction.

3.8 ALLOWANCES

3.8.1 The Contractor shall include in the Contract Sum any and all allowances stated in the Contract Documents. Items covered by allowances shall be supplied for such amounts and by such persons or entities as the Owner may direct, but the Contractor shall not be required to employ persons or entities to whom the Contractor has reasonable objection.

3.8.2 Unless otherwise provided in the Contract Documents:

.1 allowances shall cover the cost to the Contractor of materials and equipment delivered at-the site and all required taxes, less applicable trade discounts;

.2 Contractor's costs for unloading and handling at the site, labor, installation costs, overhead, profit and other expenses contemplated for stated allowance amounts shall be included in the Contract Sum but not in the allowances;

.3 whenever costs are more than or less than allowances, the Contract Sum shall be adjusted accordingly by Change Order. The amount of the Change Order shall reflect (I) the difference between actual costs and the allowances under Clause 3.8.2.1 and (2) changes in Contractor's costs under Clause 3.8.2.2.

3.8.3 Materials and equipment under an allowance shall be selected by the Owner in sufficient time to avoid delay in the Work.

3.9 SUPERINTENDENT

3.9.1 The Contractor shall employ an experienced and competent superintendent and necessary assistants who shall be in attendance at the Project site at all times during performance of the Work including completion of the punch list. The Contractor shall notify the Consultant and the Owners Representative as to the identity of the superintendent who shall not be changed during the course of the Work without prior written notification to the Consultant and Owner Representative. The superintendent shall represent the Contractor, and communications given to the superintendent shall be as binding as if given to the Contractor. Important communications shall be confirmed in writing. Other communications shall be similarly confirmed on written request in each case.

3.10 CONTRACTOR'S CONSTRUCTION SCHEDULES

3.10.1 The Contractor, promptly and within ten (10) days after being awarded the Contract, shall prepare and submit for the Owner's and Consultant's information a preliminary Contractor's construction schedule for the Work consistent with the with the requirements of the Contract Documents. Prior to submitting its first Application for Payment, the Contractor, after consultation with its subcontractors, shall submit six (6) hard copies and one electronic copy of the Contractor’s construction schedule consistent with the requirements of the Contract Documents. The schedule shall not exceed time limits current under the Contract Documents, shall be revised at appropriate intervals as required by the conditions of the Work and Project, shall be related to the entire Project to the extent required by the Contract Documents, and shall

provide for expeditious and practicable execution of the Work. The construction schedule shall not be changed without the prior written consent of the Owners Representative.

3.10.2 The Contractor shall prepare and keep current, for the Consultant's review, a schedule of submittals which is coordinated with the Contractor's construction schedule and allows the Owner and the Consultant reasonable time to review in accordance with the Specifications and submittal procedures. The Contractor should expect a response time of approximately 21 days from the Consultant and Consultant's consultants. Neither the Consultant nor Owner can represent or guarantee response times from governmental authorities, such as permitting agencies. Neither the Contractor's preparation, nor the Consultant's receipt or review shall modify the Contractor's responsibility to make required submittals or to do so in a timely manner.

3.10.3 The Contractor shall perform the Work in accordance with the most recent schedules submitted to the Owner and accepted by the Owner and shall promptly notify the Owner of any deviations from the schedule. Should the Contractor fail to comply with the schedule, or in the Owner's opinion fail, refuse, or neglect to supply a sufficient amount of labor, materials, equipment or services in the prosecution of the Work, the Owner shall have the right to direct the Contractor to furnish such additional labor, materials, equipment or services to comply with the schedule and all costs thereof shall be borne by the Contractor and shall not increase the Contract Sum. All schedules submitted shall be in the form acceptable to the Owner using critical path methodology (CPM) clearly showing overall Project and specific items and tasks of construction activities, dependencies and durations as well as overall and specific commencement and completions dates. The critical path activities shall be highlighted, float and non-critical activities shall be shown and the start and stop times for each activity shall be listed. Float belongs to the benefit of the Project for the Owner's use and no float shall be used without the Owner's written approval. The Contractor shall at all times monitor the progress of the Work for conformance with the CPM schedule accepted by the Owner and shall promptly advise the Owner and Consultant of any impacts or delays or potential impacts or delays. The Contractor shall also update the construction schedule to reflect actual conditions and shall propose plans in order to avoid or correct any impact or delays.

3.11 DOCUMENTS AND SAMPLES AT THE SITE

3.11.1 The Contractor shall maintain at the site for the Owner one (1) record copy of the Drawings, Specifications, Addenda, Change Orders and other Modifications, in good order and marked currently to record field changes and selections made during construction, and one (1) record copy of approved Shop Drawings, Product Data, Samples and similar required submittals. These shall be accessible to inspectors and available to the Consultant and Owner and shall be delivered to the Consultant for submittal to the Owner upon completion of the Work and before Contractor's request for final payment.

3.12 SHOP DRAWINGS, PRODUCT DATA AND SAMPLES

3.12.1 Shop Drawings are drawings, diagrams, schedules and other data specially prepared for the Work by the Contractor or a Subcontractor, Sub-subcontractor, manufacturer, supplier or distributor to illustrate some portion of the Work.

3.12.2 Product Data are illustrations, standard schedules, performance charts, instructions, brochures, diagrams and other information furnished by the Contractor to illustrate materials or equipment for some portion of the Work.

3.12.3 Samples are physical examples which illustrate materials, equipment or workmanship and establish standards by which the Work will be judged.

3.12.4 Shop Drawings, Product Data, Samples and similar submittals are not Contract Documents. The purpose of their submittal is to demonstrate for those portions of the Work for which submittals are required by the Contract Documents the way by which the Contractor proposes to conform to the information given and the design concept expressed in the Contract Documents. Review by the Consultant or any other

person is subject to the limitations of Subparagraph 4.2.7. Information submittals upon which the Consultant is not expected to take responsive action may be so identified in the Contract Documents. Submittals which are not required by the Contract Documents may be returned by the Consultant without action.

3.12.5 The Contractor shall review for compliance with the Contract Documents, approve and submit to the Consultant, Shop Drawings, Product Data, Samples and similar submittals required by the Contract Documents with reasonable promptness and in such sequence as to cause no delay in the Work or in the activities of the Owner or of separate contractors. Submittals which are not marked as reviewed for compliance with the Contract Documents and approved by the Contractor may be returned by the Consultant without action.

3.12.6 By approving and submitting Shop Drawings, Product Data, Samples and similar submittals, the Contractor represents that the Contractor has determined and verified materials, field measurements and field construction criteria related thereto, or will do so, and has checked and coordinated the information contained within such submittals with the requirements of the Work and of the Contract Documents.

3.12.7 The Contractor shall perform no portion of the Work for which the Contract Documents require submittal and review of Shop Drawings, Product Data, Samples or similar submittals until the respective submittal has been approved by the Consultant.

3.12.8 The Work shall be in accordance with approved submittals except that the Contractor shall not be relieved of responsibility for deviations from requirements of the Contract Documents by any approval of Shop Drawings, Product Data, Samples or similar submittals unless the Contractor has specifically informed the Consultant and Owner in writing of such deviation at the time of submittal and (1) the Consultant has given specific written approval to the specific deviation as a minor change in the Work, or (2) a Change Order or Construction Change Directive has been issued authorizing the deviation. The Contractor shall not be relieved of responsibility for errors or omissions in Shop Drawings, Product Data, Samples or similar submittals by the, any person's approval thereof.

3.12.9 The Contractor shall direct specific attention, in writing or on resubmitted Shop Drawings, Product Data, Samples or similar submittals, to revisions other than those requested by the Consultant on previous submittals. In the absence of such written notice, any person's approval of a resubmission shall not apply to such revisions. Contractor shall submit Shop Drawings, Product Data, Samples and similar submittals in forms and in a manner reasonably acceptable to the Consultant. Contractor shall submit no less than two (2) copies or examples for review of any Shop Drawings, Product Data, Samples or similar submittals at Contractor’s sole cost and expense.

3.12.10 The Contractor shall not be required to provide professional services which constitute the practice of Architecture or engineering unless such services are specifically required by the Contract Documents for a portion of the Work or unless the Contractor needs to provide such services in order to carry out the Contractor's responsibilities for construction means, methods, techniques, sequences and procedures. The Contractor shall not be required to provide professional services in violation of applicable law. If professional design services or certifications by a design professional related to systems, materials or equipment are specifically required of the Contractor by the Contract Documents, the Owner and the Consultant will specify all performance and design criteria that such services must satisfy. The Contractor shall cause such services or certifications to be provided by a properly licensed design professional, whose signature and seal shall appear on all drawings, calculations, specifications, certifications, Shop Drawings and other submittals prepared by such professional. Shop Drawings and other submittals related to the Work designed or certified by such professional, if prepared by others, shall bear such professional's written approval when submitted to the Consultant. The Owner and the Consultant shall be entitled to rely upon the adequacy, accuracy and completeness of the services, certifications or approvals performed by such design professionals, provided the Owner and Consultant have specified to the Contractor all performance and design criteria that such services must satisfy. Pursuant to this Subparagraph 3.12.10, the Consultant will review, approve or take other appropriate action on submittals only for the limited purpose of checking

for conformance with information given and the design concept expressed in the Contract Documents. The Contractor shall not be responsible for the adequacy of the performance or design criteria required by the Contract Documents.

3.13 USE OF SITE

3.13.1 The Contractor shall confine operations at the site to areas permitted by law, ordinances, permits and the Contract Documents and shall not unreasonably encumber the site with materials or equipment. Notwithstanding anything contained in the Contract Documents to the contrary, the Contractor shall, as part of the Work, not disrupt or interfere in any manner with any of the Owner's or Owner's authorized provider's operations at the Project site or any other locations, including, without limitation any and all educational, social, athletic or recreational programs, activities, classes or events. Contractor shall not park or otherwise utilize any other area designated by the Owner or typically used by Owner's employees, staff, students, parents or visitors or local residents or businesses.

3.14 CUTTING AND PATCHING

3.14.1 The Contractor shall be responsible for cutting, fitting or patching required to complete the Work or to make its parts fit together properly.

3.14.2 The Contractor shall not damage or endanger a portion of the Work or fully or partially completed construction of the Owner or separate contractors by cutting, patching or otherwise altering such construction, or by excavation. The Contractor shall not cut or otherwise alter such construction by the Owner or a separate contractor except with written consent of the Owner and of such separate contractor; such consent shall not be unreasonably withheld. The Contractor shall not unreasonably withhold from the Owner or a separate contractor the Contractor's consent to cutting or otherwise altering the Work. To the extent that the Work involves renovation, alteration or repair of existing improvements, cutting and patching essential for the Project shall be successfully completed and Contractor shall perform the Work so that it is fully integrated into the existing improvements operationally and aesthetically.

3.15 CLEANING UP

3.15.1 The Contractor shall at all times keep the premises and surrounding area free from accumulation of waste materials or rubbish caused by operations under the Contract. At completion of the Work, the Contractor shall remove from and about the Project waste materials, rubbish, the Contractor's tools, construction equipment, machinery and surplus materials.

3.15.2 If the Contractor fails to clean up as provided in the Contract Documents, the Owner may do so and the cost thereof shall be charged to the Contractor.

3.16 ACCESS TO WORK

3.16.1 The Contractor shall provide the Owner and Consultant and their employees. agents and officers access to the Work in preparation and progress wherever located.

3.17 ROYALTIES, PATENTS AND COPYRIGHTS

3.17.1 The Contractor shall pay all royalties and license fees. The Contractor shall defend suits or claims for infringement of copyrights and patent rights and shall hold the Owner and Consultant harmless from loss on account thereof, but shall not be responsible for such defense or loss when a particular design, process or product of a particular manufacturer or manufacturers is required by the Contract Documents or where the copyright violations are contained in Drawings, Specifications or other documents prepared by the Owner or Consultant. However, if the Contractor has reason to believe that the required design, process

or product is an infringement of a copyright or a patent, the Contractor shall be responsible for such loss unless such information is promptly furnished to the Consultant in writing.

3.18 INDEMNIFICATION

3.18.1 To the fullest extent permitted by law and to the extent claims, damages, losses or expenses are not covered by Project Management Protective Liability insurance purchased by the Contractor in accordance with Paragraph 11.2, the Contractor shall indemnify and hold harmless the Owner, Consultant, Consultant's consultants, and agents and employees of any of them from and against claims, damages, losses and expenses, including, but not limited to, attorneys' fees, arising out of or resulting from performance of the Work, provided that such claim, damage, loss or expense is attributable to bodily injury, sickness, disease or death, or to injury to or destruction of tangible property (other than the Work itself), but only to the extent caused by the negligent acts or omissions of the Contractor, any Subcontractor, anyone directly or indirectly employed by them or anyone for whose acts they may be liable, regardless of whether or not such claim, damage, loss or expense is caused in part by a party indemnified hereunder. Such obligation shall not be construed to negate, abridge, or reduce other rights or obligations of indemnity which would otherwise exist as to a party or person described in this Paragraph 3.18.

3.18.2 In claims against any person or entity indemnified under this Paragraph 3.18 by an employee of the Contractor, Subcontractor, anyone directly or indirectly employed by them or anyone for whose acts they may be liable, the indemnification obligation under Subparagraph 3.18.1 shall not be limited by a limitation on amount or type of damages, compensation or benefits payable by or for the Contractor or a Subcontractor under workers' compensation acts, disability benefit acts or other employee benefit acts.

ARTICLE 4 ADMINISTRATION OF THE CONTRACT

4.1 CONSULTANT OR OWNER'S REPRESENTATIVE

4.1.1 The term "Consultant" as used in the Contract Documents, shall mean MFIA, Inc. or "Owner's Representative", as used in the Contract Documents, shall mean HMK Company (HMKCO), and its respective personnel.

4.1.2.1 If a licensed Consultant is engaged by Owner who is not designated as the "Owner's Representative", the Owner shall make written directive and notification to Contractor, which shall perform any Contract Administration duties. For ease of reference and consistency, the term "Consultant" shall be used in the Contract Documents to refer to the contract administrator.

4.1.2 Duties, responsibilities and limitations of authority of the Consultant as set forth in the Contract Documents shall not be restricted, modified or extended without written consent of the Owner, and Consultant.

4.1.3 If the employment of the Consultant is terminated, the Owner shall employ a new Consultant under such terms and conditions as are agreeable between the Owner and the new Consultant.

4.2 CONSULTANT'S ADMINISTRATION OF THE CONTRACT

4.2.1 The Consultant may provide administration of the Contract as described in the Contract Documents, and may be an Owner's representative (1) during construction, (2) until final payment is due and (3) with the Owner's concurrence, from time to time during the one-year period for correction of Work described in Paragraph 12.2. The Consultant will have authority to act on behalf of the Owner only to the extent provided in the Contract Documents, unless otherwise modified in writing in accordance with other provisions of the Contract.

4.2.2 The Consultant, as a representative of the Owner, will visit the site at intervals appropriate to the stage of the Contractor's operations (1) to become generally familiar with and to keep the Owner informed about

the progress and quality of the portion of the Work completed, (2) to endeavor to guard the Owner against defects and deficiencies in the Work, and (3) to determine in general if the Work is being performed in a manner indicating that the Work, when fully completed, will be in accordance with the Contract Documents. However, the Consultant will not be required to make exhaustive or continuous on-site inspections to check the quality or quantity of the Work. The Consultant will neither have control over or charge of, nor be responsible for the construction means, methods, techniques, sequences or procedures, or for the safety precautions and programs in connection with the Work, since these are solely the Contractor's rights and responsibilities under the Contract Documents, except as provided in Subparagraph 3.3.1.

4.2.3 The Consultant will not be responsible for the Contractor's failure to perform the Work in accordance with the requirements of the Contract Documents. The Consultant will not have control over or charge of and will not be responsible for acts or omissions of the Contractor, any Subcontractors, or their agents or employees, or any other persons or entities performing portions of the Work.

4.2.4 Communications Facilitating Contract Administration. The Owner, Owners Representative and Contractor may communicate with each other through the Consultant about matters arising out of or relating to the Contract. The Contractor shall also PROVIDE THE OWNER AND OWNERS REPRESENTATIVE WITH A DIRECT COPY OF ALL WRITTEN COMMUNICATIONS TO THE CONSULTANT, including all notices, requests, Claims and potential changes in the Contract Sum or Time, but not including Shop Drawings, Product Data or Samples. Communications by and with the Consultant's consultants shall be through the Consultant. Communications by and with Subcontractors and material suppliers shall be through the Contractor. Communications by and with separate contractors shall be through the Owner.

4.2.5 Based on the Consultant's evaluations of the Contractor's Applications for Payment, the Consultant may review and certify the amounts due the Contractor and will issue Certificates for Payment in such amounts.

4.2.6 The Consultant may have authority to reject Work that does not conform to the Contract Documents. Whenever the Consultant considers it necessary or advisable, the Consultant may have authority to require inspection or testing of the Work in accordance with Subparagraphs 13.5.2 and 13.5.3, whether or not such Work is fabricated, installed or completed. However, neither this authority of the Consultant nor a decision made in good faith either to exercise or not to exercise such authority shall give rise to a duty or responsibility of the Consultant to the Contractor, Subcontractors, material and equipment suppliers, their agents or employees, or other persons or entities performing portions of the Work.

4.2.7 The Consultant will review and approve or take other appropriate action upon the Contractor's submittals such as Shop Drawings, Product Data and Samples, but only for the limited purpose of checking for conformance with information given and the design concept expressed in the Contract Documents. The Consultant's action will be taken with such reasonable promptness as to cause no delay in the Work or in the activities of the Owner, Contractor or separate contractors, while allowing sufficient time in the Consultant's professional judgment to permit adequate review. Review of such submittals is not conducted for the purpose of determining the accuracy and completeness of other details such as dimensions and quantities, or for substantiating instructions for installation or performance of equipment or systems, all of which remain the responsibility of the Contractor as required by the Contract Documents. The Consultant's review of the Contractor's submittals shall not relieve the Contractor of the obligations under Paragraphs 3.3, 3.5 and 3.12. The Consultant's review shall not constitute approval of safety precautions or, unless otherwise specifically stated by the Consultant, of any construction means, methods, techniques, sequences or procedures. The Consultant's approval of a specific item shall not indicate approval of an assembly of which the item is a component.

4.2.8 The Consultant may prepare Change Orders and Construction Change Directives, and may authorize minor changes in the Work as provided in Paragraph 7.4.

4.2.9 The Consultant may conduct inspections to determine the date or dates of Substantial Completion and the date of final completion, may receive and forward to the Owner, for the Owner's review and records,

written warranties and related documents required by the Contract and assembled by the Contractor, and may issue a final Certificate for Payment upon compliance with the requirements of the Contract Documents.

4.2.10 If the Owner and Consultant designate, the Consultant will provide one or more project representatives to assist in carrying out the Consultant's responsibilities at the site.

4.2.11 The Consultant may interpret and decide matters concerning performance under and requirements of, the Contract Documents on written request of either the Owner or Contractor. The Consultant's response to such requests will be made in writing within any time limits agreed upon or otherwise with reasonable promptness. If no agreement is made concerning the time within which interpretations required of the Consultant shall be furnished in compliance with this Paragraph 4.2, then delay shall not be recognized on account of failure by the Consultant to furnish such interpretations until 5 days after written request is made for them.

4.2.12 Interpretations and decisions of the Consultant, if any, will be consistent with the intent of and reasonably inferable from the Contract Documents and will be in writing or in the form of drawings. When making such interpretations and initial decisions, the Consultant will endeavor to secure faithful performance by both Owner and Contractor, will not show partiality to either and will not be liable for results of interpretations or decisions so rendered in good faith.

4.2.13 The Consultant's decisions on matters relating to aesthetic effect may be final if consistent with the intent expressed in the Contract Documents. The terms and conditions of the Owner's agreement with the Consultant shall govern the Consultant's responsibilities.

4.3 CLAIMS AND DISPUTES

4.3.1 Definition. A Claim is a demand or assertion by one of the parties seeking, as a matter of right, adjustment or interpretation of Contract terms, payment of money, and extension of time or other relief with respect to the terms of the Contract. The term "Claim" also includes other disputes and matters in question between the Owner and Contractor arising out of or relating to the Contract. Claims must be initiated by written notice. The responsibility to substantiate Claims shall rest with the party making the Claim.

4.3.2 Time Limits on Claims. Claims by either party must be initiated within 21 days after occurrence of the event giving rise to such Claim or within 21 days after the claimant first recognizes the condition giving rise to the Claim, whichever is later. Claims must be initiated by written notice to the Consultant and the other party.

4.3.3 Continuing Contract Performance. Pending final resolution of a Claim except as otherwise agreed in writing or as provided in Subparagraph 9.7.1 and Article 14, the Contractor shall proceed diligently with performance of the Contract and the Owner shall continue to make payments in accordance with the Contract Documents.

4.3.4 Claims for Concealed or Unknown Conditions. Except as otherwise provided herein, if conditions are encountered at the site which are (1) subsurface or otherwise concealed physical conditions which differ materially from those indicated in the Contract Documents or (2) unknown physical conditions of an unusual nature, which differ materially from those ordinarily found to exist and generally recognized as inherent in construction activities of the character provided for in the Contract Documents, the Contractor shall give written notice to the Owner and the Consultant promptly before conditions are disturbed and in no event later than seven (7) days after first observance of the conditions. The Consultant may promptly investigate such conditions and, if they differ materially and cause an increase or decrease in the Contractor's cost of, or time required for, performance of any part of the Work, will recommend an equitable adjustment in the Contract Sum or Contract Time, or both, consistent with the requirements of the Contract Documents. If the Consultant determines that the conditions at the site are not materially different from those indicated in the Contract Documents and that no change in the terms of the Contract is justified, the Consultant may so

notify the Owner and Contractor in writing, stating the reasons. Any claim of the Contractor arising from the Consultant's determination shall be made in accordance with the dispute resolution procedures set forth in Paragraphs 4.4 through 4.6. No adjustment in the Contract Time or Sum shall be permitted, however, if connection with any concealed or unknown condition which does not materially differ from those disclosed or which should have reasonably been discovered by the Contractor's prior visits, observations, tests or for which the Contractor assumed any responsibility to verify.

4.3.5 Claims for Additional Cost. If the Contractor wishes to make Claim for an increase in the Contract Sum, written notice as provided herein shall be given before proceeding to execute the Work, and a Claim must be made in accordance with Paragraphs 4.4 through 4.6 or it will be deemed waived. Prior notice is not required for Clams relating to an emergency endangering life or property arising under Paragraph 10.6.

4.3.6 If the Contractor believes additional cost is involved for reasons, including, but not limited to:

.1 a written interpretation from the Consultant

.2 an order by the Owner to stop the Work where the Contractor was not at fault

.3 a written order for a minor change in the Work issued by the Consultant

.4 failure of payment by the Owner

.5 termination of the Contract by the Owner

.6 Owner's suspension or

.7 other reasonable grounds, Claim shall be filed in accordance with this Paragraph 4.3.

All Claims for additional costs shall include any and all costs, including, but not limited to, any and all direct and indirect costs thereof.

4.3.7 Claims for Additional Time

4.3.7.1 If the Contractor wishes to make Claim for an increase in the Contract Time, written notice as provided herein shall be given and a Claim shall be made as provided herein. The Contractor's Claim shall include an estimate of any cost and of probable effect of delay on progress of the Work. In the case of a continuing delay, only one Claim is necessary. If the delay was not caused by the Owner, the Contractor, a Subcontractor of any tier, or the Consultant, or anyone acting on behalf of any of them, the Contractor shall be entitled only to an increase in the Contract Time, in accordance with the Contract documents, but not a change in the Contract Sum. If the delay was caused by the Contractor, a Subcontractor of any tier, or anyone acting on behalf of any of them, the Contractor is not entitled to an increase in the Contract Time or in the Contract Sum.

4.3.7.2 If adverse weather conditions are the basis for a Claim for additional time, such Claim shall be documented by data substantiating that weather conditions were abnormal for the period of time, could not have been reasonably anticipated and had an adverse effect on the scheduled construction, and that the Work was on schedule (or was not behind schedule through the fault of the Contractor) at the time the adverse weather conditions occurred. Neither the Contract Time nor the Contract Sum will be adjusted for normal inclement weather. The Contractor shall be entitled to a change in the Contract Time only if the Contractor can substantiate to the reasonable satisfaction of the Owner and Consultant that there was materially greater than normal inclement weather considering the full term of the Contract Time and using a ten-year average of accumulated record mean values from climatological data compiled by the U.S. Department of Commerce National Oceanic and Atmospheric Administration for the locale of the Project, and that the alleged abnormal inclement weather actually extended the critical path of the Work. IF the total net accumulated number of calendar days lost due to inclement weather from commencement of the

Work until Final Completion exceeds the total net accumulated to be expected for the same period from the aforesaid data, and the Owner grants the critical path.

4.3.8 Injury or Damage to Person or Property. If either party to the Contract suffers injury or damage to person or property because of an act or omission of the other party, or of others for whose acts such party is legally responsible, written notice of such injury or damage, whether or not insured, shall be given to the other party within a reasonable time not exceeding 21 days after discovery. The notice shall provide sufficient detail to enable the other party to investigate the matter.

4.3.9 If unit prices are stated in the Contract Documents or subsequently agreed upon, and if quantities originally contemplated are materially changed in a proposed Change Order or Construction Change Directive so that application of such unit prices to quantities of Work proposed will cause substantial inequity to the Owner or Contractor, the applicable unit prices shall be equitably adjusted.

4.3.10 Time is of the Essence. The parties agree that the Owner shall be entitled to recover liquidated damages at the rate stated in the Agreement, which shall commence on the first day following the expiration of the Contract Time and continuing until the date of Substantial completion.

4.4 RESOLUTION OF CLAIMS AND DISPUTES

4.4.1 In an effort to reduce the incidence and costs to all parties of extended disputes, all Claims, direct or indirect, arising out of, or relating to, the Contract Documents or the breach thereof, except claims which have been waived under the terms of the Contract Documents, shall be decided exclusively by the following alternative dispute resolution procedure unless the parties mutually agree in writing otherwise.

4.4.2 The Contractor shall submit a written notice of any Claim to the Owner and the Consultant within 14 days of the occurrence of the event giving rise to such Claim and shall include a clear description of the event leading to or causing the Claim. The Contract shall submit a written Claim as providing herein within 30 days of the notice. Claims shall include a clear description of the Claim and any proposed change in the Contract Sum (showing all components and calculations) and/or Contract Time (showing cause of and analysis of the resultant delay in the critical path) of the Claim and shall provide data fully supporting the Claim. Failure to properly submit the notice of Claim shall constitute waiver of the Claim. The Claim shall be deemed to include all changes, direct and indirect, in cost and in time to which the Contractor (and Subcontractors of any tier) is entitled. Any claim of a Subcontractor of any tier may be brought only through, and after review by, the Contractor.

4.4.3 Upon receipt of a Claim against the Contractor or at any time thereafter, the Consultant or the Owner may, but is not obligated to, notify the surety, if any, of the nature and amount of the Claim. If the Claim relates to a possibility of a Contractor's default, the Consultant or the Owner may, but is not obligated to, notify the surety and request the surety's assistance in resolving the controversy.

4.4.4 If a claim relates to or is the subject of a mechanic’s lien or construction lien, the party asserting such Claim may proceed in accordance with applicable law to comply with the lien notice or filing deadlines prior to resolution of the Claim by the Consultant, by mediation or by litigation.

4.4.5 Within 30 days of the Owner’s receipt of the written Claim, the Contactor may require that an officer of the Contractor, a principal of the Consultant, and the Owner’s Superintendent or designee (all with authority to settle) meet, confer, and attempt to resolve the Claim during the following 21 days. The Owner may continue the meeting to a time after it has assembled and reviewed data. If the Claim is not resolved, the Contractor may bring no claim against the Owner unless the Claim is first subject to nonbinding mediation as described in Paragraph 4.5. This requirement cannot be waived except by an explicit written waiver.

4.4.6 The Contractor agrees that the Owner may join the Contractor as a party to any litigation/arbitration involving the alleged fault of the Contractor or Subcontractor of any tier.

4.5 MEDIATION

4.5.1 Any Claim arising out of or relating to the Contract, except Claims relating to aesthetic effect and except those waived shall be subject to mediation as a condition precedent to the institution of legal or equitable proceedings by either party. This requirement cannot be waived except by an express written waiver.

4.5.2 The parties shall endeavor to resolve their claims by mediation, which unless the parties mutually agree otherwise, shall be in accordance with the Construction Industry Mediation Rule of the American Arbitration Association currently in effect. Request for mediation shall be filed in writing with the other party to the Contract and with the American Arbitration Association. Mediation shall proceed in advance of legal or equitable proceedings, which shall be stayed pending mediation unless stayed for a longer period by agreement of the parties or court order.

4.5.3 The parties to the mediation shall share the mediator's fee and any filing fees equally. The medication shall be held in the place where the Project is located, unless another location is mutually agreed upon. Agreements reached in mediation shall be enforceable as settlement agreements in any court having jurisdiction thereof.

4.5.4 An officer of the Contract and the Owner's Superintendent or designee must attend the mediation session with authority to settle the Claim. To the extent there are other parties in interest, such as the Consultant or Subcontractors, their representatives, also with the authority to settle the Claim, shall also attend the mediation session. Unless the Owner and the Contractor mutually agree in writing otherwise, all unresolved Claims shall be considered at a single mediation session which shall occur prior to Final Acceptance by the Owner.

4.6 LITIGATION

4.6.1 The Contractor may bring no litigation on Claims unless such Claims have been properly raised and considered in the procedures of Subparagraphs 4.4.1 through 4.4.3 above. All unresolved Claims of the Contractor shall be waived and released unless the Contractor has complied with the time limits of the Contract Documents, and litigation is served and filed within the earlier of (a) 120 days after the Date of Substantial Completion approved in writing by the Owner or (b) 60 days after Final Acceptance. This requirement cannot be waived except by an explicit written waiver signed by the Owner and the Contractor. The pendency of mediation shall toll these deadlines until the later of the mediator providing written notice to the parties of impasse or 30 days after the date of the last mediation session. Neither the Contractor nor a Subcontractor of any tier, whether claiming under a lien statute or otherwise, shall be entitled to attorneys' fees directly or indirectly from the Owner (but may recover attorneys' fees from the statutory Retainage fund itself to the extent allowable under law).

4.6.2 Judgment on Final Award. The award rendered by the arbitrator or arbitrators shall be final, and judgment may be entered upon it in accordance with applicable law in any court having jurisdiction thereof.

ARTICLE 5 SUBCONTRACTORS

5.1 DEFINITIONS

5.1.1 The term "Subcontractor" is referred to throughout the Contract Documents as if singular in number and means a Subcontractor or an authorized representative of the Subcontractor. The term "Subcontractor" does not include a separate contractor or subcontractors of a separate contractor.

5.2 AWARD OF SUBCONTRACTS AND OTHER CONTRACTS FOR PORTIONS OF THE WORK

5.2.1 The Contractor shall not change a Subcontractor, person or entity previously selected if the Owner or Consultant makes reasonable objection to such substitute. The Contractor shall require bids and contracts

from Subcontractors to be submitted in a format which specifically sets for the amount of any credit that the Owner will ultimately be the benefit of, if all or any portion of any Subcontractor's Work is deleted. In no instance shall the Owner be obligated to pay any fee, profit or overheard for Work which is deleted from any Subcontractor's scope or from that of the Contractor.

5.3 SUBCONTRACTUAL RELATIONS

5.3.1 By appropriate agreement, written where legally required for validity, the Contractor shall require each Subcontractor, to the extent of the Work to be performed by the Subcontractor, to be bound to the Contractor by terms of the Contract Documents, and to assume toward the Contractor all the obligations and responsibilities, including the responsibility for safety of the Subcontractor's Work, which the Contractor, by these Documents, assumes toward the Owner or Consultant. Each subcontract agreement shall preserve and protect the rights of the Owner and Consultant under the Contract Documents with respect to the Work to be performed by the Subcontractor so that subcontracting thereof will not prejudice such rights. Where appropriate, the Contractor shall require each Subcontractor to enter into similar agreements with other Subcontractors. The Contractor shall make available to each proposed Subcontractor, prior to the execution of the subcontract agreement, copies of the Contract Documents to which the Subcontractor will be bound, and, upon written request of the Subcontractor, identify to the Subcontractor terms and conditions of the proposed subcontract agreement which may be at variance with the Contract Documents. Subcontractors will similarly make copies of applicable portions of such documents available to their respective proposed Sub-subcontractors.

5.4 CONTINGENT ASSIGNMENT OF SUBCONTRACTS

5.4.1 Each subcontract agreement for a portion of the Work is assigned by the Contractor to the Owner or to another contractor should Owner so elect and consent, provided that:

.1 assignment is effective only after termination of the Contract by the Owner and only for those subcontract agreements which the Owner accepts by notifying the Subcontractor and Contractor in writing; and

.2 assignment is subject to the prior rights of the surety, if any, obligated under bond relating to the Contract.

5.4.2 Each subcontract shall specifically provide that the Owner (or other contractor) shall only be responsible to the subcontractor for those obligations that accrue after the Owner's or other contractor's exercise of rights under the conditional assignment required hereby.

ARTICLE 6 CONSTRUCTION BY OWNER OR BY SEPARATE CONTRACTORS

6.1 OWNER'S RIGHT TO PERFORM CONSTRUCTION AND TO AWARD SEPARATE CONTRACTS

6.1.1 The Owner reserves the right to perform construction or operations related to the Project with the Owner's own forces, and to award separate contracts in connection with other portions of the Project or other construction or operations on the site under Conditions of the Contract identical or substantially similar to these including those portions related to insurance and waiver of subrogation. If the Contractor claims that delay or additional cost is involved because of such action by the Owner, the Contractor shall make such Claim as provided in Paragraph 4.3.

6.1.2 When separate contracts are awarded for different portions of the Project or other construction or operations on the site, the term "Contractor" in the Contract Documents in each case shall mean the Contractor who executes each separate Owner-Contractor Agreement.

6.1.3 The Owner shall provide for coordination of the activities of the Owner's own forces and of each separate contractor with the Work of the Contractor, who shall cooperate with them. The Contractor shall

participate with other separate contractors and the Owner in reviewing their construction schedules when directed to do so. The Contractor shall make without an increase in the Contract Time or Sum any revisions to the construction schedule deemed necessary after a joint review and mutual agreement. The construction schedules shall then constitute the schedules to be used by the Contractor, separate contractors and the Owner until subsequently revised.

6.1.4 Unless otherwise provided in the Contract Documents, when the Owner performs construction or operations related to the Project with the Owner's own forces, the Owner shall be deemed to be subject to the same obligations and to have the same rights which apply to the Contractor under the Conditions of the Contract, including, without excluding others, those stated in Article 3, this Article 6 and Articles 10, 11 and 12.

6.2 MUTUAL RESPONSIBILITY

6.2.1 The Contractor shall afford the Owner and separate contractors reasonable opportunity for introduction and storage of their materials and equipment and performance of their activities, and shall connect and coordinate the Contractor's construction and operations with theirs as required by the Contract Documents.

6.2.2 If part of the Contractor's Work depends for proper execution or results upon construction or operations by the Owner or a separate contractor, the Contractor shall, prior to proceeding with that portion of the Work, promptly report to the Consultant apparent discrepancies or defects in such other construction that would render it unsuitable for such proper execution and results. Failure of the Contractor so to report shall constitute an acknowledgment that the Owner's or separate contractor's completed or partially completed construction is fit and proper to receive the Contractor's Work, except as to defects not then reasonably discoverable.

6.2.3 The Owner shall be reimbursed by the Contractor for costs incurred by the Owner which are payable to a separate contractor because of delays, improperly timed activities or defective construction of the Contractor or any Subcontractors. The Owner shall be responsible to the Contractor for costs incurred by the Contractor because of delays, improperly timed activities, and damage to the Work or defective construction of a separate contractor.

6.2.4 The Contractor shall promptly remedy damage wrongfully caused by the Contractor or Subcontractors to completed or partially completed construction or to property of the Owner or separate contractors as provided in Subparagraph 10.2.5.

6.3 OWNER'S RIGHT TO CLEAN UP

6.3.1 If a dispute arises among the Contractor, separate contractors and the Owner as to the responsibility under their respective contracts for maintaining the premises and surrounding area free from waste materials and rubbish, the Owner may clean up and the Consultant may allocate the cost among those responsible.

ARTICLE 7 CHANGES IN THE WORK

7.1 GENERAL

7.1.1 Changes in the Work may be accomplished after execution of the Contract, and without invalidating the Contract, solely by Change Order, Construction Change Directive or order for a minor change in the Work, subject to the limitations stated in this Article 7 and elsewhere in the Contract Documents.

7.1.2 A Change Order shall be based upon agreement among the Owner, Contractor and Consultant; a Construction Change Directive requires agreement by the Owner and Consultant and may or may not be

agreed to by the Contractor; an order for a minor change in the Work may be issued by the Consultant alone.

7.1.3 Changes in the Work shall be performed under applicable provisions of the Contract Documents, and the Contractor shall proceed promptly, unless otherwise provided in the Change Order, Construction Change Directive or order for a minor change in the Work.

7.1.4 Before effectuating a change in the Work, the Owner may request the Contractor to propose the amount of change in the Contract Sum, if any, and the extent of change in the Contract Time, if any, arising from the proposed change in the Work. The Contractor shall submit its responsive proposal as soon as possible and within 14 days and shall in good faith specify the components and amounts by which the Contract Sum and/or Contract Time would change. Labor, materials and equipment shall be limited to and itemized in the manner described in Paragraph 7.5 for the Contractor and major Subcontractors. If the Contractor fails to respond within this time, the Owner may withhold some or all of a progress payment otherwise due until the tardy proposal is received. If the Owner accepts the proposal in writing, the Owner will be immediately bound, the change will be included in a future Change Order, and the change in the Work shall commence expeditiously. The Owner may reject the proposal, in which case the Owner may either not effectuate the change in the Work or may order the change through a Construction Change Directive or an order for a minor change in the Work. The Consultant may confer directly with Subcontractors of any tier concerning any item proposed to the Owner under this Article.

7.2 CHANGE ORDERS

7.2.1 A Change Order is a written instrument which may be prepared by the Consultant and signed by the Owner, Contractor and which may be signed by the Consultant, stating their agreement upon all of the following:

.1 change in the Work;

.2 the amount of the adjustment, if any, in the Contract Sum; and

.3 the extent of the adjustment, if any, in the Contract Time.

7.2.2 Methods used in determining adjustments to the Contract Sum may include those listed in Subparagraph 7.3.3. Agreement on a Change Order shall constitute full and final settlement of all issues and matters related to the change in Work which is subject to the Change Order including, without limitation, any and all direct and indirect costs and all adjustments in the Contract Time and Sum. There shall be no fee due or to become due to the Contractor related to deductive Change Orders.

7.3 CONSTRUCTION CHANGE DIRECTIVES

7.3.1 A Construction Change Directive is a written order which may be prepared by the Consultant and signed by the Owner, and which may be signed by the Consultant, directing a change in the Work prior to agreement on adjustment, if any, in the Contract Sum or Contract Time, or both. The Owner may by Construction Change Directive, without invalidating the Contract, order changes in the Work within the general scope of the Contract consisting of additions, deletions or other revisions, the Contract Sum and Contract Time being adjusted accordingly.

7.3.2 A Construction Change Directive shall be used in the absence of total agreement on the terms of a Change Order.

7.3.3 If the Construction Change Directive provides for an adjustment to the Contract Sum, the adjustment shall be based on one of the following methods:

.1 mutual acceptance of a lump sum properly itemized and supported by sufficient substantiating data to permit evaluation;

.2 unit prices stated in the Contract Documents or subsequently agreed upon;

.3 cost to be determined in a manner agreed upon by the parties (accompanied by an itemized estimate of probable cost) and a mutually acceptable fixed or percentage fee; or

.4 as provided in Subparagraph 7.3.6.

7.3.4 Upon receipt of a Construction Change Directive, the Contractor shall promptly proceed with the change in the Work involved. As soon as possible and within seven (7) days of receipt the Contractor shall advise the Consultant in writing of the Contractor's agreement or disagreement with the proposed adjustment or the method, if any, provided in the Construction Change Directive for determining the proposed adjustment in the Contract Sum or Contract Time. The Contractor's response shall reasonably specify the reasons for its disagreement and the adjustment or other terms that it proposes. Without such timely written response, the Contractor shall conclusively be deemed to have accepted the Owner's adjustment. The Contractor's disagreement shall not relieve the Contractor of its obligations to comply promptly with any written notice issued by the Owner or the Consultant. The adjustment shall then be determined by the Consultant in accordance with the provisions of the Contract Documents.

7.3.5 A Construction Change Directive signed by the Contractor indicates the agreement of the Contractor therewith, including adjustment in Contract Sum and Contract Time or the method for determining them. Such agreement shall be effective immediately and shall be incorporated into and be construed and interpreted as a Change Order.

7.3.6 If the Contractor does not respond promptly or disagrees with the method for adjustment in the Contract Sum, or if cost is to be determined under Clause 7.3.3.3, the Contractor shall keep and present itemized in the categories of Paragraph 7.5 and in such form as the Consultant may prescribe, an itemized accounting together with appropriate supporting data. In order to facilitate checking of such quotations, all proposals, except those so minor that their propriety can be seen be inspection, shall be accompanied by complete itemization of costs, including labor, equipment, material and subcontract costs. Labor, equipment and materials shall be itemized in the manner described in Paragraph 7.5. When major cost items arise from Subcontractors of any tier, these items shall also be similarly itemized. Approval may not be given without such itemization. Failure to provide data within 21 days of the Owner's request shall constitute waiver of any Claim for changes in the Contract Time or Contract Sum. The total cost of any change, including a Claim under Paragraph 4.3 or 4.4, shall be limited to the reasonable value, as determined by the Consultant (subject to appeal through the dispute resolution procedure of Paragraph 4.4), of the items in Paragraph 7.5. Unless otherwise agreed in writing by the Owner, the cost shall not exceed the lower of the prevailing cost for the work in the locality of the Project or the cost of the work in the current edition of R.S. Means Company, Inc., Building Construction Cost Data as adjusted to local costs and conditions. The Consultant and the Owner may communicate directly with Subcontractors concerning costs of any Work included in a Construction Change Directive. If the Contractor disagrees with the method for the adjustment in the Contract Time, the adjustment and method shall be referred to the Consultant for determination, and any adjustment shall be limited to the change in the actual critical path of the Contractor's Construction Schedule directly caused thereby.

7.3.7 The amount of credit to be allowed by the Contractor to the Owner for a deletion or change which results in a net decrease in the Contract Sum shall be the largest of (1) the reasonable and prevailing value of the deletion or change; (2) the line item value in the Schedule of Values: or (3) the actual net cost as confirmed by the Consultant. When both additions and credits covering related Work or substitutions are involved in a change, the allowance for overhead and profit shall be figured on the basis of net increase, if any, with respect to that change.

7.3.8 Pending final determination of the total cost of a Construction Change Directive to the Owner and provided that any amounts not in dispute for such changes in the Work shall be included in Applications for Payment accompanied by a Change Order indicating the parties' agreement with part or all of such costs. If the Contractor adds a reservation of rights that has not been initialed b the Owner, all the amounts for the Construction Change Directive shall be considered disputed unless costs are renegotiated or the reservation is withdrawn or changed in a manner satisfactory to the Owner.

7.3.9 When the Owner and Contractor agree with the determination made by the Consultant concerning the adjustments in the Contract Sum and Contract Time, or otherwise reach agreement upon the adjustments, such agreement shall be effective immediately and shall be recorded by preparation and execution of an appropriate Change Order.

7.4 MINOR CHANGES IN THE WORK

7.4.1 The Consultant and the Owner will have authority to order minor changes in the Work not involving adjustment in the Contract Sum or extension of the Contract Time and not inconsistent with the intent of the Contract Documents. Such changes shall be effected by written order and shall be binding on the Owner and Contractor. The Contractor shall carry out any and all such written orders promptly. If at the option of the Owner, the Consultant exercises any authority, right(s) or duty(ies) stated anywhere in this Agreement or any other Contract Document as an authority, right or duty the Consultant may perform, the Contractor shall comply with, be bound by and respond therewith and thereto, including, but not limited to, the exercise of any authority, right(s) or duty(ies) related to minor work.

7.5 PRICING COMPONENTS

7.5.1 The total cost of any changed Work or of any other increase or decrease in the Contract Sum, including a Claim, shall be limited to the following components:

.1 Basic wages: The hourly wage (without markup, fringe benefits or labor burden) not to exceed that specified in the applicable “Intent to Pay Prevailing Wage” for the laborers, apprentices, journeymen, and foremen performing and/or directly supervising the changed Work on the site. The premium portion of overtime wages is not included unless pre-approved by the Owner.

.2 Fringe benefits: Fringe benefits paid by the Contractor as established by the Oregon Bureau of Labor and Industries or contributed to labor trust funds as itemized fringe benefits, whichever is applicable. Costs paid or incurred by the Contractor for vacations, per diem, bonuses, stock options, or discretionary payments to employees are not reimbursable.

.3 Workers’ insurances: Direct contributions to the State of Oregon as industrial insurance; medical aid; and supplemental pension by class and rates established by the Oregon Bureau of Labor and Industries.

.4 Federal insurances: Direct contributions required by the Federal Insurance Compensation Act (FICA); Federal Unemployment Tax Act (FUTA); and State Unemployment Compensation Act (SUCA).

7.5.2 Direct material costs: This is an itemization, including material invoice, of the quantity and cost of additional materials reasonable and necessary to perform the change in the Work. The unit cost shall be based upon the net cost after all discounts or rebates, freight costs, express charges, or special delivery costs, when applicable. No lump sum costs will be allowed except when approved in advance by the Consultant. Discounts and rebates based on prompt payment may be included, however, if the Contractor offers but the Owner declines the opportunity.

7.5.3 Construction equipment usage costs: This is an itemization of the actual length of time that construction equipment appropriate for the Work will be used solely on the change in the Work at the site times the applicable rental cost as established by the lower of the local prevailing rate published in The Rental Rate Blue Book by Data Quest, San Jose, California, or the actual rate paid to an unrelated third party as evidenced by rental receipts. Actual, reasonable mobilization costs are permitted if the equipment is brought to the Site solely for the change in the Work. If equipment is required for which a rental rate is not established by The Rental Rate Blue Book, an agreed rental rate shall be established for the equipment, which rate and use must be approved by the Consultant prior to performing the work. If more than one rate is applicable, the lowest rate will be utilized. The rates in effect at the time of the performance of the changed Work are the maximum rates allowable for equipment of modern design and in good working condition and include full compensation for furnishing all fuel, oil, lubrication, repairs, maintenance, and insurance. Equipment not of modern design and/or not in good working condition will have lower rates. Hourly, weekly, and/or monthly rates, as appropriate, will be applied to yield the lowest total cost. The rate for equipment necessarily standing by for future use on the changed Work shall be 50% of the rate established above. The total cost of rental allowed shall not exceed the cost of purchasing the equipment outright.

7.5.4 Cost of change in insurance or bond premium. This is defined as:

.1 Contractors' liability insurance: The cost (expressed as a percentage) of any changes in the Contractor's liability insurance arising directly from the changed Work; and

.2 Public works bond: The cost (expressed as a percentage) of the change in the Contractor's premium for the Contractor's bond arising directly from the changed Work.

Upon request, the Contractor shall provide the Owner with supporting documentation from its insurer or surety of any associated cost incurred.

7.5.5 Subcontractor costs: These are payments the Contractor makes to Subcontractors for changed Work performed by Subcontractors. The Subcontractors' cost of changed Work shall be determined in the same manner as prescribed in this Paragraph 7.5.

7.5.6 Fee: This is the allowance for all combined overhead, profit and other costs, including all office, home office and site overhead (including project manager, project engineers, project foreman, estimator, superintendent and their vehicles), taxes (except for sales tax), warranty, safety costs, quality control/assurance, purchasing, small or hand tool or expendable charges, preparation of as-built drawings, impact on unchanged Work, Claim preparation, and delay and impact costs of any kind, added to the total cost to the Owner of any Change Order, Construction Change Directive, Claim or any other claim of any kind on this Project. It shall be limited in all cases to the following schedule:

.1 The Contractor shall receive 15% of the cost of any materials supplied or work properly performed by the Contractor's own forces.

.2 The Contractor shall receive 8% of the amount owed directly to a Subcontractor or Supplier for materials supplied or work properly performed by that Subcontractor or Supplier.

.3 Each Subcontractor of any tier shall receive 12% of the cost of any materials properly supplied or work properly performed by its own forces.

.4 Each Subcontractor of any tier shall receive 8% of the amount it properly incurs for materials supplied or work properly performed by its suppliers or subcontractors of any lower tier.

.5 The cost to which this Fee is to be applied shall be determined in accordance with Paragraph 7.5.1-7.5.4.

.6 The total summed Fee of the Contractor and all Subcontractors of any tier shall not exceed 25%. None of the fee percentages authorized in this Paragraph 7.5.6 may be compounded with any other fee percentage or percentages authorized in this paragraph.

If a change in the Work involves both additive and deductive items, the appropriate Fee allowed will be added to the net difference of the items. If the net difference is negative, no Fee will be added to the negative figure as a further deduction.

ARTICLE 8 TIME

8.1 DEFINITIONS

8.1.1 Unless otherwise provided, Contract Time is the period of time, including authorized adjustments, allotted in the Contract Documents for Substantial Completion of the Work.

8.1.2 The date of commencement of the Work is the date established in the Agreement.

8.1.3 The date of Substantial Completion is the date certified by the Consultant in accordance with Paragraph 9.8.

8.1.4 The term “day” as used in the Contract Documents shall mean calendar day unless otherwise specifically defined. Time is expressly declared of the essence as it relates to the performance of the Contractor’s Work. Without limiting the foregoing, Contractor must complete the Project in the manner required hereby on the date required hereby. The failure to so complete the Project shall cause the Owner

to incur substantial costs and expenses, including, but not limited to, those related to staffing, teachers, management, transportation, publication, communication, signage, and rental, all of which costs and expenses the Contractor shall be liable for.

8.2 PROGRESS AND COMPLETION

8.2.1 Time limits stated in the Contract Documents are of the essence of the Contract. By executing the Agreement the Contractor confirms that the Contract Time is a reasonable period for performing the Work.

8.2.2 The Contractor shall not knowingly, except by agreement or instruction of the Owner in writing, prematurely commence operations on the site or elsewhere prior to the effective date of insurance required by Article II to be furnished by the Contractor and Owner. The date of commencement of the Work shall not be changed by the effective date of such insurance. The Contractor shall notify the Owner in writing not less than five days or other agreed period before commencing the Work.

8.2.3 The Contractor shall proceed expeditiously with adequate forces and shall achieve Substantial Completion and Final Completion within the Contract Time.

8.3 DELAYS AND EXTENSIONS OF TIME

8.3.1 If the Contractor is unreasonably delayed at any time .in the commencement or progress of the Work (1) by an act or neglect of the Owner or Consultant, or of an employee of either, or of a separate contractor employed by the Owner, or (2) by changes ordered in the Work only to the extent reflected in approved Change Orders providing for specific extensions of the Contract Time, or (3) b unanticipated, abnormal weather (see Paragraph 4.3.7), or (4) by unexpected industry-wide labor disputes, fire, unusual delay in deliveries, governmental delays (including permit delays not caused by the Owner), unavoidable casualties or other causes beyond the Contractor's control, or (5) by delay authorized by the Owner pending mediation and litigation, or (6) by other causes which the Consultant determines may justify delay, then the Contract Time shall be extended by Change Order for such reasonable time, limited to the change in the actual critical path of the Contractor's Construction Schedule directly caused thereby, as the Consultant may

determine consistent with the provisions of the Contract Documents. In no event, however, shall the Contractor be entitled to any extension of time absent proof of (1) delay to an activity on the critical path of the Contract Schedule, also as to actually delay the Project completion beyond the date of Substantial Completion, or (2) delay transforming an activity into the critical path of the Contract Schedule, so as to actually delay the Project completion beyond the date of Substantial Completion.

8.3.2 Claims relating to time shall be made in accordance with applicable provisions of Paragraphs 4.3 and 4.4. That the Owner or Consultant may be aware of the occurrence or existence of a delay through means other than the Contractor's written notification shall not constitute a waiver of a timely or written notice or Claim.

8.3.3 This Paragraph 8.3 does not preclude recovery of damages for delay by either party under other provisions of the Contract Documents.

.1 If the delay was not caused by the Owner, the Contractor, a Subcontractor of any tier, or the Consultant, or anyone acting on behalf of any of them, the Contractor is entitled only to an increase in the Contract Time in accordance with the Contract Documents, but not a change in the Contract Sum. If the delay was caused by the Contractor, a Subcontractor of any tier, or anyone acting on behalf of any of them, the Contractor is not entitled to an increase in the Contract Time or in the Contract Sum. The Contractor shall not recover damages, an equitable adjustment or an increase in the Contract Sum or Contract Time from the Owner where the Contractor could have reasonably avoided the delay by the exercise of due diligence. The Contractor shall be able to recover an increase in the Contract Sum, consistent with the terms of the Contract Documents, only if a delay in the critical path was unreasonable and caused by the Owner. A Subcontractor is not entitled to damages, an equitable adjustment or an increase in the Contract Sum for any delay that does not increase the Contract Time.

.2 In the event the Contractor (including any Subcontractors of any tier) is held to be entitled to damages from the Owner for delay beyond the payment permitted in Subparagraph 7.5.6, it is agreed that the total combined damages to the Contractor and any Subcontractors of any tier for each day of delay shall be limited to the same daily liquidated damage rate specified in the Contract Documents due the Owner for the Contractor's delay in achieving Substantial Completion. No damages will be allowed for any time prior to 14 days before receipt of written notice of the Claim of the delay pursuant to Subparagraph 4.4.2.

.3 The Contractor shall not in any event be entitled to damages arising out of actual or alleged loss of efficiency; morale, fatigue, attitude, or labor rhythm; constructive acceleration; home office overhead; expectant under run; trade stacking; reassignment of workers; rescheduling of work, concurrent operations; dilution of supervision; learning curve; beneficial or joint occupancy; logistics; ripple; season change; extended overhead; profit upon damages for delay; impact damages; or similar damages.

.4 The Contractor shall not be entitled to any adjustment in the Contract Time or in the Contract Sum, or to any additional payment of any sort, by reason of the loss or the use of any float time, including time between the Contractor's anticipated completion date and the end of the Contract Time, whether or not the float time is described as such on the Contractor's Construction Schedule.

ARTICLE 9 PAYMENTS AND COMPLETION

9.1 CONTRACT SUM

9.1.1 The Contract Sum is stated in the Agreement and, including authorized adjustments, is the total

amount payable by the Owner to the Contractor for performance of the Work under the Contract Documents.

9.2 SCHEDULE OF VALUES

9.2.1 Within seven (7) calendar days of the execution of this the Agreement and with each Application for Payment, the Contractor shall submit to the Consultant a schedule of values in a form satisfactory to the Consultant and Owner allocated to various portions of the Work, prepared in such form and supported by such data to substantiate its accuracy as the Consultant may require. This schedule, unless objected to by the Consultant or Owner, shall be used as a basis for reviewing the Contractor's Applications for Payment.

9.3 APPLICATIONS FOR PAYMENT

9.3.1 At least ten days before the date established for each progress payment, the Contractor shall submit to the Consultant an itemized Application for Payment for operations completed in accordance with the schedule of values. Such application shall be notarized and supported by such data substantiating the Contractor's right to payment as the Owner or Consultant may require, such as copies of requisitions from Subcontractors and material suppliers and reflecting Retainage if provided for in the Contract Documents.

9.3.1.1 As provided in Subparagraph 7.3.8, such applications may include requests for payment on account of changes in the Work which have been properly authorized by Construction Change Directives, or by interim determinations of the Consultant, but not yet included in Change Orders.

9.3.1.2 Such applications may not include requests for payment for portions of the Work for which the Contractor does not intend to pay to any Subcontractor including any material supplier.

9.3.2 Unless otherwise provided in the Contract Documents, payments shall be made on account of materials and equipment delivered and suitably stored at the site for subsequent incorporation in the Work. If approved in advance by the Owner, payment may similarly be made for materials and equipment suitably stored off the site at a location agreed upon in writing. Payment for materials and equipment stored on or off the site shall be conditioned upon compliance by the Contractor with procedures satisfactory to the Owner to establish the Owner's free and clear title to such materials and equipment or otherwise protect the Owner's interest, and shall include the costs of applicable insurance, storage and transportation to the site for such materials and equipment stored off the site.

9.3.3 The Contractor warrants that title to all Work covered by an Application for Payment will pass to the Owner no later than the time of payment. The Contractor further warrants that upon submittal of an Application for Payment all Work for which Certificates for Payment have been previously issued and payments received from the Owner shall, be free and clear of any and all liens, claims, security interests or encumbrances in favor of the Contractor, and any all Subcontractors, including any material suppliers, or other persons or entities making a claim by reason of having provided labor, materials and equipment relating to the Work.

9.4 CERTIFICATES FOR PAYMENT

9.4.1 The Consultant may, within seven (7) days after receipt of the Contractor's Application for Payment, either issue to the Owner a Certificate for Payment, with a copy to the Contractor, for such amount as the Consultant determines is properly due, or notify the Contractor and Owner in writing of the Consultant's reasons for withholding certification in whole or in part as provided in Subparagraph 9.5.1.

9.4.2 The issuance of a Certificate for Payment will constitute a representation by the Consultant to the Owner, based on the Consultant's evaluation of the Work and the data comprising the Application for Payment, that the Work has progressed to the point indicated and that, to the best of the Consultant's knowledge, information and belief, the quality of the Work is in accordance with the Contract Documents. The foregoing representations are subject to an evaluation of the Work for conformance with the Contract Documents upon Substantial Completion, to results of subsequent tests and inspections, to correction of minor deviations from the Contract Documents prior to completion and to specific qualifications expressed by the Consultant. However, the issuance of a Certificate for Payment will not be a representation that the Consultant has (I) made exhaustive or continuous on-site inspections to check the quality or quantity of the Work, (2) reviewed construction means, methods, techniques, sequences or procedures, (3) reviewed copies of requisitions received from Subcontractors and material suppliers and other data requested by the Owner to substantiate the Contractor's right to payment, or (4) made examination to ascertain how or for what purpose the Contractor has used money previously paid on account of the Contract Sum.

9.5 DECISIONS TO WITHHOLD CERTIFICATION

9.5.1 The Consultant may withhold a Certificate for Payment in whole or in part, to the extent reasonably necessary to protect the Owner, if, in the Consultant's opinion the representations to the Owner required by Subparagraph 9.4.2 cannot be made. If the Consultant is unable to certify payment in the amount of the Application, the Consultant may notify the Contractor and Owner as provided in Subparagraph 9.4. I. If the Contractor and Consultant cannot agree on a revised amount, the Consultant may promptly issue a Certificate for Payment for the amount for which the Consultant is able to make such representations to the Owner. The Consultant may also withhold a Certificate for Payment or, because of subsequently discovered evidence, may nullify the whole or a part of a Certificate for Payment previously issued, to such extent as may be necessary in the Consultant's opinion to protect the Owner from loss for which the Contractor is responsible, including loss resulting from acts and omissions described in Subparagraph 3.3.2, because of:

.1 defective Work not remedied;

.2 third party claims filed or reasonable evidence indicating probable filing of such claims unless security is acceptable to the Owner is provided by the Contractor;

.3 failure of the Contractor to make payments properly to Subcontractors or for labor, materials or equipment;

.4 reasonable evidence that the Work cannot be completed for the unpaid balance of the Contract Sum;

.5 damage to the Owner or another contractor;

.6 reasonable evidence that the Work will not be completed within the Contract Time, and that the unpaid balance would not be adequate to cover actual or liquidated damages for the anticipated delay; or

.7 Any other failure to comply with the Contract Documents or Contractor's persistent failure to carry out the Work in accordance with the Contract Documents.

9.5.2 When the above reasons for withholding certification are removed, certification will be made for amounts previously withheld.

9.6 PROGRESS PAYMENTS

9.6.1 After the Consultant has received all the necessary documents and properly issued a Certificate for Payment, the Owner shall make payment in the manner and within the time provided in the Contract Documents and may so notify the Consultant.

9.6.2 If not done previously, The Contractor shall promptly pay each Subcontractor, upon receipt of payment from the Owner, out of the amount paid to the Contractor on account of such Subcontractor's portion of the Work, the amount to which said Subcontractor is entitled, reflecting percentages actually retained from payments to the Contractor on account of such Subcontractor's portion of the Work. The Contractor shall, by appropriate agreement with each Subcontractor, require each Subcontractor to make payments to Sub-subcontractors in a similar manner.

9.6.3 The Consultant or Owner may on request, furnish to any Subcontractors or any other person or entity, if practicable, information regarding percentages of completion or amounts applied for by the Contractor and action taken thereon by the Consultant and Owner on account of portions of the Work done by such Subcontractor.

9.6.4 Neither the Owner nor Consultant shall have an obligation to pay nor to see to the payment of money to a Subcontractor except as may otherwise be required by law.

9.6.5 Payment to material suppliers shall be treated in a manner similar to that provided for Subcontractors because by the definitions of this Agreement they are a Subcontractor.

9.6.6 A Certificate for Payment, a progress payment, or partial or entire use or occupancy of the Project by the Owner shall not constitute acceptance of Work not in accordance with the Contract Documents.

9.6.7 Payments received by the Contractor for Work properly performed by Subcontractors and suppliers shall be held by the Contractor for those Subcontractors or suppliers who performed Work or furnished materials, or both, under contract with the Contractor for which payment was made by the Owner. Nothing contained herein shall require money to be placed in a separate account and not commingled with money of the Contractor, shall create any fiduciary liability or tort liability on the part of the Contractor for breach of trust or shall entitle any person or entity to an award of punitive damages against the Contractor for breach of the requirements of this provision.

9.7 FAILURE OF PAYMENT

9.7.1 If the Consultant does not issue a Certificate for Payment, through no fault of the Contractor, within seven days after receipt of the Contractor's Application for Payment, or if the Owner does not pay the Contractor within seven days after the date established in the Contract Documents the amount certified by the Consultant or awarded by arbitration, then the Contractor may, upon seven additional days' written notice to the Owner and Consultant, stop the Work until payment of the amount owing has been received. The Contract Time shall be extended appropriately, and the Contract Sum shall be increased by the amount of the Contractor's reasonable costs of shut-down, delay and start-up, plus interest as provided for in the Contract Documents.

9.8 SUBSTANTIAL COMPLETION

9.8.1 Substantial Completion is the stage in the progress of the Work, or portion thereof designated and approved by the Consultant and Owner, when the Work or designated portion thereof is sufficiently

complete in accordance with the Contract Documents so that the Owner can fully occupy and utilize the Work, or designated portion thereof, for its intended use. All Work other than incidental corrective or punch list work and final cleaning shall have been completed, including but not limited to the following:

.1 Obtain temporary occupancy permits, pressure vessel permits, elevator permits, and similar approvals or certificates by governing authorities and franchised services, assuring the Owner's full access and use of completed Work.

.2 Submit the Contractor's punch list of items to be completed or corrected and written request for inspection.

.3 Complete final start-up, testing, and commence instruction and training sessions on all major building systems, including HVAC and controls, intercom, data communications, fire alarm, telephone, fire sprinkler, security and clocks.

.4 Make final changeover of locks and transmit new keys to the Owner, and advise the Owner of the changeover in security provisions.

.5 Discontinue or change over and remove temporary facilities and services from the project site.

.6 Advise the Owner on coordination of shifting insurance coverages, including proof of extended coverages as required.

The Work is not Substantially Complete unless the Consultant reasonably judges that the Work can achieve Final completion within 60 days, appropriate cleaning has occurred, all systems and parts are commissioned and usable, including balancing of the HVAC system, utilities are connected and operating normally, all required temporary occupancy permits have been issued and the work is accessible by normal vehicular and pedestrian traffic routes. The fact that the owner may occupy the Work or a designated portion thereof does not indicate that the work is Substantially Complete or is acceptable in whole or in part, nor does such occupation toll or change any liquidated damages due the Owner.

9.8.1.2 Date of commissioning of Critical Systems. The following systems of the Work, and any other systems designated in the Contract Documents, are considered "Critical Systems": the HVAC system, the data communication system(s), the intercom system, the life safety system(s) and the security system. When the Contractor considers that the Critical Systems are up and running and ready for normal operation as specified for each phase, the Contractor shall so notify the Consultant in writing a minimum of 14 days prior to the Date of Substantial Completion for that portion or phase as fixed in the contract Documents. The Consultant will then schedule a pre-commissioning inspection of these systems to determine whether the Critical Systems are complete and ready for normal operation. If the Consultant's inspection discloses that the Critical Systems are not Substantially Complete or that any item which is not in accordance with the requirements of the Contract Documents, the Contractor shall expeditiously, and before the Date of Commissioning, complete or correct such item upon notification by the Consultant. The Contractor shall then submit a request for another inspection by the Consultant to determine completion of the Critical Systems and pay the costs associated with the re-inspection, including fees of the Consultant and its consultants. When the Critical Systems are complete, the Consultant will notify the Owner in writing, which shall establish the Date of Commissioning. Warranties on the Critical Systems required by the Contract Documents shall commence on the Date of Commissioning, unless otherwise provided. The Date of Commissioning shall not have an effect on the duties of the parties at Substantial Completion.

9.8.1.3 Indemnification. The Contractor shall defend, indemnify, and hold harmless the Owner and the Consultant and their agents, employees, and consultants, successors and assigns from and against all claims, damages, losses and expenses of third parties, direct and indirect, or consequential, including costs, design professional fees, and attorneys' fees incurred by the owner related to such claims and in proving the right to indemnification, arising out of or resulting from the failure of the Contractor to attain the Date of Commissioning less than 30 days prior to the Date of Substantial Completion fixed by the Contract Documents. In particular, the Contractor acknowledges that a 30-day period after the Date of Commissioning and prior to occupancy is specified during which the HVAC system is scheduled to operate under a procedure intended to dissipate out-gassing that may occur from interior and other materials.

9.8.2 When the Contractor considers that the Work, or a portion thereof which the Owner agrees to accept separately, is substantially complete, the Contractor shall prepare and submit to the Consultant and Owner a comprehensive list of items to be completed or corrected prior to final payment. The Contractor shall proceed promptly to complete and correct all items on the list. Failure to include an item on such list does not alter the responsibility of the Contractor to complete all Work in accordance with the Contract Documents.

9.8.3 Upon receipt of the Contractor's list, the Consultant and the Owner will make an inspection to determine whether the Work or designated portion thereof is substantially complete. If the Consultant's inspection discloses any item, whether or not included on the Contractor's list, which is not sufficiently complete in accordance with the Contract Documents so that the Owner can occupy and utilize the Work or designated portion thereof for its intended use, the Contractor shall, before issuance of the Certificate of Substantial Completion, complete or correct such item upon notification by the Consultant or Owner. In such case, the Contractor shall then submit a request for another inspection by the Consultant to determine Substantial Completion. If the Owner or Consultant determines that the Work or designated portion is not substantially complete, then the contractor shall expeditiously complete the Work or designated portion, request another inspection and pay all costs associated with any re-inspection.

9.8.4 When the Work or designated portion thereof is substantially complete, the Consultant may prepare a Certificate of Substantial Completion which, upon approval of the Owner, may establish the date of Substantial Completion, shall establish responsibilities of the Owner and Contractor for security, maintenance, heat, utilities, damage to the Work and insurance, and shall fix the time within which the Contractor shall finish all items on the list accompanying the Certificate. Warranties required by the Contract Documents shall commence on the date of Substantial Completion of the Work or designated portion thereof unless otherwise provided in the Certificate of Substantial Completion. The Contractor shall attach and submit with the executed Certificate or Substantial Completion a written list of each outstanding and unresolved Claim; any Claim not so submitted and identified, other than Retainage and the undisputed balance of the Contract Sum, shall be deemed waived and abandoned. If the Owner or Consultant determines that the Work or designated portion is not substantially complete, the Contractor shall expeditiously complete the Work or designated portion, again request an inspection, and pay the costs associated with the re-inspection, including Consultant and consultant fees.

9.8.5 The Certificate of Substantial Completion shall be submitted to the Owner and Contractor for their written acceptance of responsibilities assigned to them in such Certificate. Any items not included by the Consultant but required or necessary for Final Completion of the Contract shall be supplies and installed by the Contractor as a part of the Contract Sum, notwithstanding their not being recorded by the Consultant. Upon written acceptance of the Certificate of Substantial Completion and upon the Contractor's application, the Owner shall make payment as provided in the Contract Documents. Such payment shall be adjusted for Work that is incomplete or not in accordance with the requirements of the Contract Documents. No further payment will be due or owing until the payment at Final Completion.

9.8.6 The Contractor shall prepare, continue to monitor with the Consultant, and cause to be completed, all punch lists with respect to the activity of each Subcontractor and report weekly to the Owner on outstanding punch list items. Beginning 90 days before the scheduled date of Substantial Completion, the Contractor shall prepare reports weekly, identifying items to be competed in order to obtain temporary and permanent certificates of occupancy and make recommendations to the Owner with respect to effectuating the earliest possible completion.

9.9 PARTIAL OCCUPANCY OR USE

9.9.1 The Owner may occupy or use any completed or partially completed portion of the Work at any stage when such portion is designated by separate agreement with the Contractor, provided such occupancy or use is consented to by the insurer as required under Clause 11.3.1.5 and authorized by public authorities having jurisdiction over the Work. Such partial occupancy or use may commence whether or not the portion is substantially complete, provided the Owner and Contractor have accepted in writing the responsibilities assigned to each of them for payments, Retainage, if any, security, maintenance, heat, utilities, damage to the Work and insurance, and have agreed in writing concerning the period for correction of the Work and commencement of warranties required by the Contract Documents. When the Contractor considers a portion substantially complete, the Contractor shall prepare and submit a list to the Consultant and Owner as provided under Subparagraph 9.8.2. Consent of the Contractor to partial occupancy or use shall not be unreasonably withheld. The stage of the progress of the Work shall be determined by written agreement between the Owner and Contractor or, if no agreement is reached, by decision of the Consultant.

9.9.2 Immediately prior to such partial occupancy or use, the Owner and Contractor shall, and Consultant may, jointly inspect the area to be occupied or portion of the Work to be used in order to determine and record the condition of the Work.

9.9.3 Unless otherwise agreed upon, partial occupancy or use of a portion or portions of the Work shall not constitute acceptance of Work not complying with the requirements of the Contract Documents.

9.10 FINAL COMPLETION AND FINAL PAYMENT

9.10.1 FINAL COMPLETION.

9.10.1.1 If, at sixty (60) days after the Date of Substantial Completion, the Owner considers that the punch list items are unlikely to be completed within sixty (60) days of Substantial Completion, the Owner may, upon seven (7) days' written notice to the contractor, take over and perform some or all of the punch list items. If the Contractor fails to correct the deficiencies within the period required, the Owner may deduct the actual cost of performing this punch list work, including costs, plus 10% to account for the Owner's transaction costs from the Contract Sum.

9.10.1.2 Upon receipt of written notice from the Contractor that the Work is ready for final inspection and acceptance, the Consultant may promptly make such inspection accompanied by the Contractor and, when the Consultant finds all punch list items fully completed and the Work acceptable under the Contract Documents and the Contract fully performed, the Consultant may promptly notify the Contractor and the Owner in writing that to the best of the Consultant's knowledge, information and belief, and on the basis of the Consultant's on-site visits and inspections, the Work has been completed in accordance with terms and conditions of the Contract Documents. If the Consultant determines that some or all of the punch list items are not fully completed, then the Contractor shall be responsible to the Owner for all costs, including re-inspection fees, associated with any subsequent Consultant's inspection. The Consultant's final Certificate for Payment will constitute a further representation that conditions listed in Subparagraph 9.10.2 as

precedent to the Contractor's being entitled to final payment have been fulfilled.

9.10.1.3 The Contractor is liable for, and the Owner may deduct from any amounts due the Contractor, all Consultant, architect, engineer or other design consultant fees incurred by the Owner for services performed more than 60 days after Substantial Completion of all the Work, whether or not those services would have been performed prior to that date had Final Completion been achieved in a timely manner.

9.10.1.4 When the Consultant finds that the Work has been concluded, a final occupancy permit has been issued, and the Contractor has submitted all the items in Subparagraph 9.10.2.1 to the Consultant, the Contractor may submit a final Application for Payment. The Consultant will then promptly issue a final Certificate for Payment stating that the entire balance found to be due the Contractor and noted in said final Certificate is due and payable. The Consultant's final Certificate for Payment shall establish the date of Final Completion upon its execution by the Owner.

9.10.1.5 "Final Completion" will be attained when the Contractor has accomplished the following:

.1 Complete all requirements listed in Paragraph 9.8 for Substantial Completion.

.2 Complete all remaining punch list items, notify Consultant and Owner that all work is complete.

.3 Obtain permanent occupancy permits.

.4 Submit final change order and final Application for Payment.

.5 Submit recorded documents, final property survey, and operation and maintenance manuals.

.6 Deliver tools, spare parts, extra stock of material and similar physical items to the Owner.

.7 Complete final cleaning.

.8 Complete instruction and train in sessions on all major building systems including HVAC, intercom data communications, fire alarm, telephone, fire sprinkler, security and clocks.

9.10.2 FINAL ACCEPTANCE AND PAYMENT

9.10.2.1 Final payment shall not become due until after the Owner's Board of Directors has formally accepted the Project "Final Acceptance". To achieve Final Acceptance, the Consultant must have issued a final Certificate of Payment under Subparagraph 9.10.1, Final Completion must have occurred, and the Contractor must have submitted to the Consultant the following:

.1 an affidavit that any and all payrolls, bills for materials and equipment, and other indebtedness connected with the Work for which the Owner or the Owner's property might be responsible or encumbered (less amounts withheld by Owner) have been paid or otherwise satisfied together with full and final unconditional waivers by the Contractor and all Subcontractors in a form and with content acceptable to the Owner, except for any Subcontractor claims that are specifically identified on the affidavit,

.2 a certificate evidencing that insurance required by the Contract Documents to remain in force after final payment is currently in effect and will not be canceled or allowed to expire

until at least 30 days' prior written notice has been given to the Owner,

.3 a written statement that the Contractor knows of no substantial reason that the insurance will not be renewable to cover the period required by the Contract Documents,

.4 consent of surety, if any, to final payment,

.5 other data establishing payment or satisfaction of or protection against obligations, such as receipts, releases and waivers of liens, claims, security interests or encumbrances arising out of the Contract, to the extent and in such form as may be designated by the Owner. If a Subcontractor refuses to furnish a release or waiver required by the Owner, the Contractor shall furnish a bond satisfactory to the Owner to indemnify the Owner against such lien or cash deposit off such lien or claim whichever the Owner may request. Such cash deposit shall be paid with the Contractor's own funds. If such lien remains unsatisfied after payments are made, the Contractor shall refund to the Owner all money that the Owner may be compelled to pay in discharging such lien, including all costs and reasonable attorneys' fees,

.6 an “Affidavit of Wages” from the Contractor and each Subcontractor of every tier certified by all required governmental authorities.

.7 a letter from the Consultant indicating that the Work is complete and recommending Final Acceptance of the Project by the Owner.

.8 certification that all materials in the Work are "lead-free" and "asbestos-free," and

.9 all warranties, guarantees, training manuals, operation instructions, certificates, spare parts, maintenance stock, specified excess material, as-built drawings and other documents or items required by the Contract Documents or local governmental entities.

9.10.3 If, after Substantial Completion of the Work, final completion thereof is materially delayed through no fault of the Contractor, and the Consultant so confirms, the Owner shall, upon application by the Contractor and certification by the Consultant, and without terminating the Contract, make payment of the balance due for that portion of the Work fully completed and accepted to the extent permitted by statute. If the remaining balance for Work not fully completed or corrected is less than Retainage stipulated in the Contract Documents, and if bonds have been furnished, the written consent of surety to payment of the balance due for that portion of the Work fully completed and accepted shall be submitted by the Contractor to the Consultant prior to certification of such payment. Such payment shall be made under terms and conditions governing final payment, except that it shall not constitute a waiver of claims.

9.10.4 If a Subcontractor of any tier or supplier refuses to furnish a release or waiver required by the Owner the Owner may (a) retain in the fund, account, or escrow funds in such amount as to defray the cost of foreclosing the liens of such claims and to pay attorneys’ fees, the total of which shall be no less than 150% of the claimed amount, or (b) accept a bond from the Contractor, satisfactory to the owner, to indemnify the Owner against such lien. If any such lien remains unsatisfied after all payments from the Retainage are made, the Contractor shall refund to the Owner all moneys that the Owner may be compelled to pay in discharging such lien, including all costs and reasonable attorneys’ fees.

9.10.5 Release of Retainage. Retainage will be held and applied by the Owner as required by law. Release of Retainage will be processed in the ordinary course of business upon expiration of sixty (60) days following

Final Acceptance of the Work by the Owner provided that no notice of lien shall have been given as provided by law, and that no claims have been brought to the attention of the Owner and that the Owner has no claims under this Contract.

9.10.6 WAIVER OF CLAIMS

9.10.6.1 Final Payment by Owner. The making of final payment shall not constitute a waiver of any Claims by the Owner.

9.10.6.2 Final Payment to Contractor. Acceptance of final payment by the Contractor, or any Subcontractors including but not limited to any material supplier shall constitute a waiver of claims by that payee except those previously timely made in writing delivered to the Owner, Consultant and identified by that payee as unsettled and attached to Contractor's final Application for Payment.

9.10.6.3 Change Orders. The execution of a Change Order shall constitute a waiver of Claims by the Contractor arising out of the Work to be performed or deleted pursuant to the Change Order, except as specifically described in the Change Order. Reservations of rights will be deemed waived and are void unless the reserved rights are specifically described in detail to the satisfaction of the Owner and are initialed by the Owner.

9.10.7 The Contractor shall maintain books, ledgers, records, documents, estimates, correspondence, logs, electronic data and other evidence pertaining to the costs incurred by the Contractor in connection with or related to the Contract ("records") to such extent and in such detail as will property reflect and fully support compliance with requirements of the Contract Documents and with all costs, charges and other amounts of whatever nature under the contract. The Contractor shall preserve such records for a period of three (3) years following the date of Final Acceptance under the contract and for such longer period as may be required by any other provision of the contract. Within seven (7) days of the Owner's requires, the Contractor agrees to make available at the office of the Contractor during normal business hours all records for inspection, audit and reproduction by the Owner or its representatives. These requirements shall be applicable to each Subcontractor of any tier and included in each Subcontract and purchase order issued with respect to the Work, except fixed-price Subcontracts where the price is $25,000 or less.

ARTICLE 10 PROTECTION OF PERSONS AND PROPERTY

10.1 SAFETY PRECAUTIONS AND PROGRAMS

10.1.1 The Contractor shall use best efforts and shall be responsible for initiating, maintaining and supervising all safety precautions and programs in connection with the performance of the Contract.

10.2 SAFETY OF PERSONS AND PROPERTY

10.2.1 The Contractor shall use best efforts to take precautions for safety of, and provide protection to prevent damage, injury or loss to:

.1 employees on the Work and other persons who may be affected thereby;

.2 the Work and materials and equipment to be incorporated therein, whether in storage on or off the site, under care, custody or control of the Contractor or the Contractor's Subcontractors or Sub-subcontractors; and

.3 other property at the site or adjacent thereto, such as trees, shrubs, lawns, walks, pavements, roadways, structures and utilities not designated for removal, relocation or replacement in the course of construction.

10.2.2 The Contractor shall give notices and comply with applicable laws, ordinances, rules, regulations and lawful orders of public authorities bearing on safety of persons or property or their protection from damage, injury or loss.

10.2.3 The Contractor shall use best efforts to erect and maintain, as required by existing conditions and performance of the Contract, safeguards for safety and protection, including posting danger signs and other warnings against hazards, promulgating safety regulations and notifying owners and users of adjacent sites and utilities and to protect adjacent property and improvements from any damage. Any damage to such property or improvements shall be promptly remedied at Contractor's sole cost and expense.

10.2.4 When use or storage of explosives or other hazardous materials or equipment or unusual methods are necessary for execution of the Work, the Contractor shall exercise utmost care and carry on such activities under supervision of properly qualified personnel and notify the Owner and Consultant in advance to such storage. To the extent that Owner's Operations limit the use or storage of explosives or other hazardous materials or equipment they shall not be used or stored at the Project.

10.2.5 The Contractor shall promptly remedy damage and loss (other than damage or loss insured under property insurance required by the Contract Documents) to property referred to in Clauses 10.2.1.2 and 10.2.1.3 caused in whole or in part by the Contractor, any Subcontractors, a Sub-subcontractor, or anyone directly or indirectly employed by any of them, or by anyone for whose acts they may be liable and for which the Contractor is responsible under Clauses 10.2.1.2 and 10.2.1.3, except damage or loss attributable to acts or omissions of the Owner or Consultant or anyone directly or indirectly employed by either of them, or by anyone for whose acts either of them may be liable, and not attributable to the fault or negligence of the Contractor. The foregoing obligations of the Contractor are in addition to the Contractor's obligations under Paragraph 3.18.

10.2.6 The Contractor shall designate a responsible member of the Contractor's organization at the site whose duty shall be the prevention of accidents. This person shall be the Contractor's superintendent unless otherwise designated by the Contractor in writing to the Owner and Consultant.

10.2.7 The Contractor shall not load or permit any part of the construction or site to be loaded so as to endanger its safety.

10.2.8 Contractor shall specifically comply with any and all laws, rules and regulations related to hazardous materials (including without limitation asbestos) and hazardous material abatement including by not limited to those relating to contracting and the performance of such work.

10.3 HAZARDOUS MATERIALS

10.3.1 If reasonable precautions will be inadequate to prevent foreseeable bodily injury or death to persons resulting from a material or substance, including but not limited to asbestos, encountered on the site by the Contractor, the Contractor shall, upon recognizing the condition, immediately stop Work in the affected area and promptly report the condition to the Owner and Consultant in writing. By executing this Contract, Contactor represents and warrants that it has no knowledge of any material or substance which would give rise to any obligation of the Owner under any provision of 10.3.

10.3.2 The Owner shall obtain the services of a licensed laboratory to verify the presence or absence of the material or substance reported by the Contractor and, in the event such material or substance is found to be present, to verify that it has been rendered harmless. Unless otherwise required by the Contract Documents, the Owner shall furnish in writing to the Contractor and Consultant the names and qualifications of persons or entities who are to perform tests verifying the presence or absence of such material or substance or who are to perform the task of removal or safe containment of such material or substance. The Contractor and the Consultant will promptly reply to the Owner in writing stating whether or not either has reasonable objection to the persons or entities proposed by the Owner. If either the Contractor or Consultant has an objection to a person or entity proposed by the Owner, the Owner shall propose another to whom the Contractor and the Consultant have no reasonable objection. When the material or substance has been rendered harmless, Work in the affected area shall resume upon written agreement of the Owner and Contractor. The Contract Time shall be extended appropriately, and the Contract Sum shall be increased in the amount of the Contractor's reasonable additional costs of shut-down, delay and start-up, which adjustments shall be accomplished as provided in Article 7.

10.4 The Owner shall not be responsible under Paragraph 10.3 for materials and substances brought to the site by the Contractor.

10.5 EMERGENCIES

10.5.1 In an emergency affecting safety of persons or property, the Contractor shall act, at the Contractors discretion, to prevent threatened damage, injury or loss. Additional compensation or extension of time claimed by the Contractor on account of an emergency shall be determined as provided in Paragraph 4.3.

ARTICLE 11 INSURANCE AND BONDS

11.1 CONTRACTOR'S LIABILITY INSURANCE

11.1.1 The Contractor shall purchase from and maintain in a company or companies lawfully authorized to do business in the jurisdiction in which the Project is located such insurance as will protect the Contractor from claims set forth below which may arise out of or result from the Contractor's operations under the Contract and for which the Contractor may be legally liable, whether such operations be by the Contractor or by any Subcontractors, or by anyone directly or indirectly employed by any of them, or by anyone for whose acts any of them may be liable:

.1 claims under workers' compensation, disability benefit and other similar employee benefit acts which are applicable to the Work to be performed;

.2 claims for damages because of bodily injury, occupational sickness or disease, or death of the Contractor's employees;

.3 claims for damages because of bodily injury, sickness or disease, or death of any person other than the Contractor's employees;

.4 claims for damages insured by usual personal injury liability coverage;

.5 claims for damages, other than to the Work itself, because of injury to or destruction of tangible property, including loss of use resulting therefrom;

.6 claims for damages because of bodily injury, death of a person or property damage arising

out of ownership, maintenance or use of a motor vehicle;

.7 claims for bodily injury or property damage arising out of completed operations; and

.8 claims involving contractual liability insurance applicable to the Contractor's obligations under Paragraph 3.18.

11.1.2 The insurance required by Subparagraph 11.1.1 shall be written for not less than limits of liability specified in the Contract Documents or required by law, whichever coverage is greater. Coverage's, whether written on an occurrence or claims-made basis, shall be maintained without interruption from date of commencement of the Work until date of final payment and termination of any coverage required to be maintained after final payment.

11.1.3 Certificates of insurance acceptable to the Owner shall be filed with the Owner prior to commencement of the Work. These certificates and the insurance policies required by this Paragraph 11.1 shall contain a provision that coverages afforded under the policies will not be canceled or allowed to expire until at least 30 days' prior written notice has been given to the Owner. If any of the foregoing insurance coverages are required to remain in force after final payment and are reasonably available, an additional certificate evidencing continuation of such coverage shall be submitted with the final Application for Payment as required by Subparagraph 9.10.2. Information concerning reduction of coverage on account of revised limits or claims paid under the General Aggregate, or both, shall be furnished by the Contractor with reasonable promptness in accordance with the Contractor's information and belief.

11.2 PROJECT MANAGEMENT PROTECTIVE LIABILITY INSURANCE

11.2.1 The Owner may also in addition to or in the alternative require the Contractor to purchase and maintain Project Management Protective Liability insurance from the Contractor's usual sources as primary coverage for the Owner's, Contractor's and Consultant's vicarious liability for construction operations under the Contract. Unless otherwise required by the Contract Documents, the Owner shall reimburse the Contractor by increasing the Contract Sum to pay the cost of purchasing and maintaining such optional insurance coverage and the Contractor shall not be responsible for purchasing any other liability insurance on behalf of the Owner. The minimum limits of liability purchased with such coverage shall be equal to the aggregate of the limits required for Contractor's Liability Insurance under Clauses 11.1.1.2 through 11.1.1.5.

11.2.2 To the extent damages are covered by Project Management Protective Liability insurance, the Owner, Contractor and Consultant waive all rights against each other for damages, except such rights as

they may have to the proceeds of such insurance. The policy shall provide for such waivers of subrogation by endorsement or otherwise.

11.2.3 The Owner may require the Contractor to include the Owner, Owners Representative, Consultant or any other persons or entities as additional insureds on the Contractor's Liability Insurance coverage under Paragraph 11.1 or as set out elsewhere in the Contract Documents.

11.3 PROPERTY INSURANCE

11.3.1 Unless otherwise provided, the Owner shall purchase and maintain, in a company or companies lawfully authorized to do business in the jurisdiction in which the Project is located, property insurance written on a builder's risk "all-risk" or equivalent policy form in the amount of the initial Contract Sum, plus value of subsequent Contract modifications and cost of materials supplied or installed by others, comprising

total value for the entire Project at the site on a replacement cost basis without optional deductibles. Such property insurance shall be maintained, until final payment has been made as provided in Paragraph 9.10 or until no person or entity other than the Owner has an insurable interest in the property required by this Paragraph 11.3 to be covered, whichever is later. This insurance shall include interests of the Owner, the Contractor, Subcontractors and Sub-subcontractors in the Project.

11.3.1.1 Property insurance may be on an "all-risk" or equivalent policy form and shall include, without limitation, insurance against the perils of fire (with extended coverage) and physical loss or damage including, without duplication of coverage, theft, vandalism, malicious mischief, collapse, earthquake, flood, windstorm, false work, testing and startup, temporary buildings and debris removal including demolition occasioned by enforcement of any applicable legal requirements, and may cover reasonable compensation for Consultant's and Contractor's services and expenses required as a result of such insured loss.

11.3.1.2 If the Owner does not intend to purchase such insurance the Owner shall so inform the Contractor. The Contractor may, then following 14 days prior written notice to the Owner by the Contractor effect such insurance which will protect the interests of the Owner, Contractor, Subcontractors and Sub-subcontractors in the Work, and if approved by the Owner in its discretion and in writing before the purchase thereof the costs thereof may be charged to the Owner.

11.3.1.3 If the property insurance requires deductibles, the Owner need not pay costs not covered because of such deductibles and they shall be paid by Contractor.

11.3.1.4 This property insurance, if any may at the Owner's option cover portions of the Work stored off the site, and also portions of the Work in transit.

11.3.1.5 Partial occupancy or use in accordance with Paragraph 9.9 may commence absent the insurance company or companies providing property insurance having consented to such partial occupancy or use by endorsement or otherwise.

11.3.2 Loss of Use Insurance. The Owner, at the Owner's option, may purchase and maintain such insurance as will insure the Owner against loss of use of the Owner's property due to fire or other hazards, however caused.

11.3.3 If during the Project construction period the Owner insures properties, real or personal or both, at or adjacent to the site by property insurance under policies separate from those insuring the Project, or if after final payment property insurance is to be provided on the completed Project through a policy or policies other than those insuring the Project during the construction period, the Owner shall waive all rights in accordance with the terms of Subparagraph 11.3.5 for damages caused by fire or other causes of loss covered by this separate property insurance. All separate policies shall provide this waiver of subrogation by endorsement or otherwise.

11.3.4 Before an exposure to loss may occur, the Owner shall file with the Contractor a copy of each policy that includes insurance coverage’s required by this Paragraph 11.3. Each policy shall contain all generally applicable conditions, definitions, exclusions and endorsements related to this Project. Each policy shall contain a provision that the policy will not be canceled or allowed to expire, and that its limits will not be reduced, until at least 30 days' prior written notice has been given to the Contractor.

11.3.5 Waivers of Subrogation. The Owner and Contractor waive all rights against (1) each other and any of their subcontractors, sub-subcontractors, agents and employees, each of the other, and (2) the Consultant, Consultant's consultants, separate contractors described in Article 6, if any, and any of their

subcontractors, sub-subcontractors, agents and employees, for damages caused by fire or other causes of loss to the extent covered by property insurance obtained pursuant to this Paragraph 11.3 or other property insurance applicable to the Work, except such rights as they have to proceeds of such insurance held by the Owner as fiduciary. The Owner or Contractor, as appropriate, shall require of the Consultant, Consultant's consultants, separate contractors described in Article 6, if any, and the subcontractors, sub-subcontractors, agents and employees of any of them, by appropriate agreements, written where legally required for validity, similar waivers each in favor of other parties enumerated herein. The policies shall provide such waivers of subrogation by endorsement or otherwise. A waiver of subrogation shall be effective as to a person or entity even though that person or entity would otherwise have a duty of indemnification, contractual or otherwise, did not pay the insurance premium directly or indirectly, and whether or not the person or entity had an insurable interest in the property damaged.

11.3.6 A loss insured under Owner's property insurance shall be adjusted by the Owner as fiduciary and made payable to the Owner as fiduciary for the insureds, as their interests may appear, subject to requirements of any applicable mortgagee clause and of Subparagraph 11.3.7. The Contractor shall pay Subcontractors their just shares of insurance proceeds received by the Contractor, and by appropriate agreements, written where legally required for validity, shall require Subcontractors to make payments to their Sub-subcontractors in similar manner.

11.3.7 The Owner as fiduciary shall have power to adjust and settle a loss with insurers unless one of the parties in interest shall object in writing within five days after occurrence of loss to the Owner's exercise of this power; if such objection is made, the dispute shall be resolved as provided in Paragraphs 4.5 and 4.6. The Owner as fiduciary shall, in the case of arbitration, make settlement with insurers in accordance with directions of the arbitrators. If distribution of insurance proceeds by arbitration is required, the arbitrators will direct such distribution.

11.4 PERFORMANCE BOND AND PAYMENT BOND

11.4.1 The Owner shall have the right to require the Contractor to furnish bonds covering faithful performance of the Contract and payment of obligations arising thereunder as stipulated in bidding requirements or specifically required in any of the Contract Documents.

11.4.2 Upon the request of any person or entity appearing to be a potential beneficiary of bonds covering payment of obligations arising under the Contract, the Contractor shall promptly furnish a copy of the bonds or shall permit a copy to be made.

ARTICLE 12 UNCOVERING AND CORRECTION OF WORK

12.1 UNCOVERING OF WORK

12.1.1 If a portion of the Work is covered contrary to the Consultant's or Owner's request or to requirements specifically expressed in the Contract Documents, it must, if required in writing by the Consultant or Owner, be uncovered for the Consultant's or Owner's observation or examination and be replaced at the Contractor's expense without change in the Contract Time.

12.1.2 If a portion of the Work has been covered which the Consultant or Owner has not specifically requested to examine prior to its being covered, the Consultant or Owner may request to see such Work and it shall be uncovered by the Contractor. If such Work is in full and strict accordance with the Contract Documents, costs of uncovering and replacement shall, by appropriate Change Order, be at the Owner's expense. If such Work is not in full and strict accordance with the Contract Documents, correction shall be

at the Contractor's sole expense unless the condition was caused by the Owner or a separate contractor in which event the Owner shall be responsible for payment of such costs.

12.2 CORRECTION OF WORK

12.2.1 BEFORE OR AFTER SUBSTANTIAL COMPLETION

12.2.1.1 The Contractor shall promptly correct Work rejected by the Consultant or failing to conform to the requirements of the Contract Documents, whether discovered before or after Substantial Completion and whether or not fabricated, installed or completed. Costs of correcting such rejected Work, including additional testing and inspections and compensation for the Consultant's services and expenses made necessary thereby, shall be at the Contractor's expense. If prior to Substantial Completion the contractor or any Subcontractors or anyone they are responsible for uses or damages any portion of the Work, they shall return it to “like new” condition without any increase in the Contract Time or Sum.

12.2.2 AFTER SUBSTANTIAL COMPLETION

12.2.2.1 In addition to the Contractor's obligations under Paragraph 3.5, if, within one year after the date of Substantial Completion of the Work or designated portion thereof or after the date for commencement of warranties established under Subparagraph 9.9.1, or by terms of an applicable special warranty required by the Contract Documents, any of the Work is found to be not in accordance with the requirements of the Contract Documents, the Contractor shall correct it promptly (but in no event later than seven days) after receipt of written notice from the Owner to do so unless the Owner has previously given the Contractor a full and final written acceptance of such condition. The Owner shall give such notice promptly after discovery of the condition. During the one-year period for correction of Work, if the Owner fails to notify the Contractor and give the Contractor an opportunity to make the correction, the Owner waives the rights to require correction by the Contractor and to make a claim for breach of warranty. If the Contractor fails to correct nonconforming Work promptly during that period after receipt of notice from the Owner or Consultant, the Owner may correct it in accordance with Paragraph 2.4.

12.2.2.2 The one-year period for correction of Work shall be extended with respect to portions of Work first performed after Substantial Completion by the period of time between Substantial Completion and the actual performance of the Work.

12.2.2.3 The one-year period for correction of Work shall be extended by corrective Work performed by the Contractor pursuant to this Paragraph 12.2.

12.2.3 The Contractor shall remove from the site portions of the Work which are not in accordance with the requirements of the Contract Documents and are neither corrected by the Contractor nor accepted by the Owner.

12.2.4 The Contractor shall bear the sole cost of correcting destroyed or damaged construction, whether completed or partially completed, of the Owner or separate contractors caused by the Contractor's correction or removal of Work which is not in accordance with the requirements of the Contract Documents.

12.2.5 Nothing contained in this Paragraph 12.2 shall be construed to establish a period of limitation with respect to other obligations which the Contractor might have under the Contract Documents. Establishment of the one-year period for correction of Work as described in Subparagraph 12.2.2 relates only to the specific obligation of the Contractor to correct the Work, and has no relationship to the time within which the obligation to comply with the Contract Documents may be sought to be enforced, nor to the time within

which proceedings may be commenced to establish the Contractor's liability with respect to the Contractor's obligations other than specifically to correct the Work.

12.3 ACCEPTANCE OF NONCONFORMING WORK

12.3.1 If the Owner prefers to accept Work which is not in accordance with the requirements of the Contract Documents, the Owner may do so instead of requiring its removal and correction, in which case the Contract Sum will be reduced as appropriate and equitable. Such adjustment shall be effected whether or not final payment has been made.

ARTICLE 13 MISCELLANEOUS PROVISIONS

13.1 GOVERNING LAW

13.1.1 The Contract shall be governed by the law of the State of Oregon.

13.2 SUCCESSORS AND ASSIGNS

13.2.1 The Owner and Contractor respectively bind themselves, their partners, successors, assigns and legal representatives to the other party hereto and to partners, successors, assigns and legal representatives of such other party in respect to covenants, agreements and obligations contained in the Contract Documents.

13.2.2 The Owner may, without consent of the Contractor, assign the Contract to any person or entity. In such event, they shall assume the Owner's rights and obligations under the Contract Documents. The Contractor shall execute all consents reasonably required to facilitate such assignment.

13.3 WRITTEN NOTICE

13.3.1 Written notice shall be deemed to have been duly served if delivered in person to the individual or a member of the firm or entity or to an officer of the corporation for which it was intended, or if delivered at or sent by registered or certified mail to the last business address known to the party giving notice. Notice by e-mail or facsimile shall not constitute written notice unless the Owner shall otherwise agree.

13.4 RIGHTS AND REMEDIES

13.4.1 Duties and obligations imposed by the Contract Documents and rights and remedies available thereunder shall be in addition to and not a limitation of duties, obligations, rights and remedies otherwise imposed or available by law.

13.4.2 No action or failure to act by the Owner, Consultant or Contractor shall constitute a waiver of a right or duty afforded them under the Contract, nor shall such action or failure to act constitute approval of or acquiescence in a breach thereunder, except as may be specifically agreed in writing.

13.5 TESTS AND INSPECTIONS

13.5.1 Tests, inspections and approvals of portions of the Work required by the Contract Documents or by laws, ordinances, rules, regulations or orders of public authorities having jurisdiction shall be made at an appropriate time. Unless otherwise provided, the Contractor shall timely make all arrangements for such tests, inspections and approvals with an independent testing laboratory or entity acceptable to the Owner,

or with the appropriate public authority, and shall bear all related costs of tests, inspections and approvals. Except as otherwise provided herein, the cost of private-independent tests by third-parties to this Agreement shall be at Owner's expense. The Contractor shall give the Consultant and Owner timely notice of when and where tests and inspections are to be made so that the Consultant and Owner may be present for such procedures. The Owner shall bear costs of tests, inspections or approvals which do not become requirements until after bids are received or negotiations concluded.

13.5.2 If the Consultant, Owner or public authorities having jurisdiction determine that portions of the Work require additional testing, inspection or approval not included under Subparagraph 13.5.1, the Consultant may, upon written authorization from the Owner, instruct the Contractor to make arrangements for such additional testing, inspection or approval by an entity acceptable to the Owner, and the Contractor shall give timely notice to the Consultant and Owner of when and where tests and inspections are to be made so that the Consultant and Owner may be present for such procedures. Such costs, except as provided in Subparagraph 13.5.3, or otherwise in the Contract Documents shall be at the Owner's expense.

13.5.3 If such procedures for testing, inspection or approval under Subparagraphs 13.5.1 and 13.5.2 reveal failure of the portions of the Work to comply with requirements established by the Contract Documents, all costs made necessary by such failure including those of repeated procedures and compensation for the Consultant's and Owner's services and expenses shall be at the Contractor's sole cost and expense.

13.5.4 Required certificates of testing, inspection or approval shall, unless otherwise required by the Contract Documents, be secured by the Contractor and promptly delivered to the Consultant.

13.5.5 If the Consultant is to observe tests, inspections or approvals required by the Contract Documents, the Consultant will do so reasonably and, where practicable, at the normal place of testing.

13.5.6 Tests or inspections conducted pursuant to the Contract Documents shall be made promptly to avoid unreasonable delay in the Work.

13.6 INTEREST

13.6.1 Payments due and unpaid under the Contract Documents shall bear interest from the date payment is due at such rate as the parties may agree upon in writing or, in the absence thereof, at the legal rate prevailing from time to time at the place where the Project is located.

13.7 COMMENCEMENT OF STATUTORY LIMITATION PERIOD

13.7.1 As between the Owner and Contractor any applicable statute of limitations shall accrue as provided by law in all events before substantial completion, between substantial completion and final certificate for payment, after final certificate for payment and otherwise.

ARTICLE 14 TERMINATION OR SUSPENSION OF THE CONTRACT

14.1 TERMINATION BY THE CONTRACTOR

14.1.1 The Contractor may terminate the Contract if the Work is stopped for a period of 30 consecutive days through no act or fault of the Contractor or any Subcontractors, Sub-subcontractor or their agents or employees or any other persons or entities performing portions of the Work under direct or indirect contract with the Contractor, for any of the following reasons:

.1 issuance of an order of a court or other public authority having jurisdiction which requires all Work to be stopped:

.2 an act of government, such as a declaration of national emergency which requires all Work to be stopped; or

.3 because the Consultant has not issued a Certificate for Payment and has not notified the Contractor of the reason for withholding certification as provided in Subparagraph 9.4.1, or because the Owner has not made payment on a Certificate for Payment within the time stated in the Contract Documents following 30 prior written notice to the Owner.

14.1.2 If one of the reasons described in Subparagraph 14.1.1 exists, the Contractor may, upon seven days' written notice to the Owner and Consultant, terminate the Contract and recover from the Owner payment for Work executed and for proven loss with respect to materials, equipment, tools, and construction equipment and machinery, including agreed reasonable overhead and profit.

14.2 TERMINATION BY THE OWNER FOR CAUSE

14.2.1 The Owner may terminate the Contract if the Contractor:

.1 persistently or repeatedly refuses or fails to supply enough properly skilled workers or proper materials;

.2 fails to make payment to Subcontractors for materials or labor in accordance with the respective agreements between the Contractor and the Subcontractors;

.3 persistently disregards laws, ordinances, or rules, regulations or orders of a public authority having jurisdiction; or

.4 otherwise is guilty of substantial breach of a provision of the Contract Documents.

14.2.2 When any of the above reasons exist, the Owner, upon certification by the Consultant that sufficient cause exists to justify such action, may without prejudice to any other rights or remedies of the Owner and after giving the Contractor and the Contractor's surety, if any, seven days' written notice, terminate employment of the Contractor and may, subject to any prior rights of the surety:

.1 take possession of the site and of all materials, equipment, tools, and construction equipment and machinery thereon owned by the Contractor (but not the construction equipment owned, operated and used by Subcontractors in the performance of their Work);

.2 accept assignment of subcontracts pursuant to Paragraph 5.4; and

.3 finish the Work by whatever reasonable method the Owner may deem expedient. Upon request of the Contractor, the Owner shall furnish to the Contractor a detailed accounting of the costs incurred by the Owner in finishing the Work.

14.2.3 When the Owner terminates the Contract for one of the reasons stated in Subparagraph 14.2.1, the Contractor shall not be entitled to receive further payment until the Work is finished.

14.2.4 If the unpaid balance of the Contract Sum exceeds costs of finishing the Work, including compensation for the Consultant's services and expenses made necessary thereby, and other damages incurred by the Owner and not expressly waived, such excess shall be paid to the Contractor. If such costs and damages exceed the unpaid balance, the Contractor shall pay the difference to the Owner. The amount to be paid to the Contractor or Owner, as the case may be, shall be certified by the Consultant, upon application, and this obligation for payment shall survive termination of the Contract. Contractor hereby fully, finally and unconditionally waives any and all other claims, including but not limited to those for lost or anticipated profits or overhead.

14.3 SUSPENSION BY THE OWNER FOR CONVENIENCE

14.3.1 The Owner may, without cause, order the Contractor in writing to suspend, delay or interrupt the Work in whole or in part for such period of time as the Owner may determine.

14.3.2 The Contract Sum and Contract Time shall be adjusted for increases in the cost and time caused by suspension, delay or interruption as described in Subparagraph 14.3.1. Adjustment of the Contract Sum shall include profit. No adjustment shall be made to the extent:

.1 that performance is, was or would have been so suspended, delayed or interrupted by another cause for which the Contractor is responsible; or

.2 that an equitable adjustment is made or denied under another provision of the Contract.

14.4 TERMINATION BY THE OWNER FOR CONVENIENCE

14.4.1 The Owner may, at any time, terminate the Contract for the Owner's convenience and without cause.

14.4.2 Upon receipt of written notice from the Owner of such termination for the Owner's convenience, the Contractor shall:

.1 cease operations as directed by the Owner in the notice;

.2 take actions necessary, or that the Owner may direct, for the protection and preservation of the Work; and

.3 except for Work directed to be performed prior to the effective date of termination stated in the notice, terminate all existing subcontracts and purchase orders and enter into no further subcontracts and purchase orders.

14.4.3 In case of such termination for the Owner's convenience, the Contractor shall be entitled to receive payment for Work executed, and costs incurred by reason of such termination as provided in 14.4.4,

14.4.4. Upon on such termination Contractor shall recover as its sole remedy payment for Work properly and timely performed and installed prior to the effective date of the termination and for items properly and timely fabricated off the site and delivered and stored in accordance with the Owner’s instructions prior to the effective date of termination. Contractor hereby fully, finally and unconditionally waives any and all other claims, including but not limited to those for lost or anticipated profits, or overhead. Owner shall be credited for payments previously made and claims the Owner has.

END SECTION

PAYMENT BOND

Bond No. _____

The undersigned, _____ as Principal and _____ as Surety, a corporation organized and existing under the laws of the state of _____, are held and bound unto JACKSON COUNTY SCHOOL DISTRICT 5 and its heirs, executers, administrators, and assigns as Obligee, for the use and benefit of all persons or entities that provide labor, materials, equipment or supplies for use under the Contract described below, in the penal sum of_____ Dollars ($_____), lawful money of the United States of America, for the payment of which Principal and Surety bind themselves and their heirs, executors, administrators, successors and assigns, jointly and severally.

WHEREAS Principal has entered into a Construction Contract ("Contract") dated _____, 202_ with Obligee for District Wide HVAC Upgrades - Bellview Elementary School ("Project"), which Contract is made a part hereof as if fully incorporated herein.

NOW, THEREFORE, THE CONDITIONS OF THIS OBLIGATION are such that if Principal shall promptly make payment to all persons or entities that provide labor, material, equipment or supplies for use under said Contract, then this obligation shall be null and void; otherwise, it shall remain in full force and effect. In the event that Principal shall be, and declared by Obligee to be in default under the Contract, the Surety, at the request of the Obligee, shall promptly remedy the default in a manner acceptable to the Owner.

In any event, this obligation shall remain in full force and effect for the applicable period of limitations or repose, whichever is longer.

Surety acknowledges that Obligee does not owe any duty to Surety to advise, notify or consult with Surety on any matters relating to the Principal or the Project, including, but not limited to, Principal's payments to Architect, Subcontractors or Principal's use of Project funds.

Principal and Surety hereby jointly and severally agree that any person or entity that provides labor, material, equipment or supplies for use under said Contract and has not been paid in full, and any other party entitled to make claim on the bond under ORS 279C, if notice is given within the applicable time period set forth in ORS 279C.605 may sue on this bond for the use of such person or entity, prosecute the suit to final judgment for such sums as may be justly due and owing claimant and have execution thereon. Obligee shall not be liable for the payment of any damages, costs or expenses (including attorney fees) awarded in any such suit.

No prepayment or delay in payment and no change, extension, assignment, addition or alteration of any provision of said Contract and no forbearance on the part of Obligee shall operate to relieve Surety from liability on this bond, and Surety hereby consents to any such changes, extensions, additions and alterations without further notice to or consent by Surety.

In the event arbitration, litigation or any other proceeding is brought upon this bond by Obligee and judgment or award is entered in Obligee's favor, Surety shall pay all of Obligee's costs incurred in such arbitration, litigation or other proceeding, including any attorney and expert witness fees.

Nonpayment of the bond premium will not invalidate this bond, nor shall any Obligee be obligated for the payment of any premiums

This bond is given and received under authority of ORS Chapter 279C, the provisions of which hereby are incorporated into this bond and made a part hereof.

Executed this _____ day of _____, 202_.

_____
PRINCIPAL

_____
Title

_____
Address

_____
SURETY

_____
Title

_____
Address

COUNTERSIGNED:

_____
Resident Agent

_____
Address

PERFORMANCE BOND

Bond No. _____

The undersigned, _____ as Principal and _____ as Surety, a corporation organized and existing under the laws of the state of _____, are held and bound unto JACKSON COUNTY SCHOOL DISTRICT 5 and its heirs, executers, administrators, and assigns as Obligee, in the penal sum of _____ Dollars ($_____), lawful money of the United States of America, for the payment of which Principal and Surety bind themselves and their heirs, executors, administrators, successors and assigns, jointly and severally.

WHEREAS Principal has entered into a Construction Contract ("Contract") dated _____, 202_ with Obligee for District Wide HVAC Upgrades - Bellview Elementary School ("Project"), which Contract is made a part hereof as if fully incorporated herein.

NOW, THEREFORE, THE CONDITIONS OF THIS OBLIGATION are such that if Principal shall faithfully, punctually and completely perform and abide with the covenants, terms, conditions and provisions of said Contract and any extensions thereof in all respects and within the time prescribed therein, including, but not limited to, the terms of any warranty and guarantee required under the said Contract; shall pay all laborers, mechanics, subcontractors, material and equipment suppliers and all persons supplying to Principal or its subcontractors and suppliers at any tier labor, materials, supplies or equipment for the prosecution of the work or any part thereof; shall fully defend, indemnify and hold Obligee harmless from all cost and damage that Obligee may suffer by reason of Principal's failure to do so; and shall in all respects perform said Contract according to applicable law, then this obligation shall be null and void; otherwise, it shall remain in full force and effect. In the event that Principal shall be, and declared by Obligee to be in default under the Contract, the Surety, at the request of the Obligee, shall promptly remedy the default in a manner acceptable to the Owner.

In any event, this obligation shall remain in full force and effect for the applicable period of limitations or repose, whichever is longer.

Surety acknowledges that Obligee does not owe any duty to Surety to advise, notify or consult with Surety on any matters relating to the Principal or the Project, including, but not limited to, Principal's payments to Subcontractors or Contractor's use of Project funds.

No prepayment or delay in payment and no change, extension, assignment, addition or alteration of any provision of said Contract and no forbearance on the part of Obligee shall operate to relieve Surety from liability on this bond, and Surety hereby consents to any such changes, extensions, additions and alterations without further notice to or consent by Surety.

In the event arbitration, litigation or any other proceeding is brought upon this bond by Obligee and judgment or award is entered in Obligee's favor, Surety shall pay all of Obligee's costs incurred in such arbitration, litigation, or other proceeding, including any attorney and expert witness fees.

In the event there is an arbitration clause in said Contract, Surety agrees to participate in and to be bound by any such arbitration to the same extent Principal is bound.

Nonpayment of the bond premium will not invalidate this bond, nor shall any Obligee be obligated for the payment of any premiums.

This bond is given and received under authority of ORS Chapter 279C, the provisions of which hereby are incorporated into this bond and made a part hereof.

Executed this _____ day of _____, 202_.

_____
PRINCIPAL

_____
Title

_____
Address

_____
SURETY

_____
Title

_____
Address

COUNTERSIGNED:

_____
Resident Agent

_____
Address

PART 1 GENERAL

1.01 MINIMUM WAGE RATES

A. The minimum wage rates to be paid all crafts and labor on this contract shall be the prevailing wage for the individual crafts involved in the Jackson County area during the life of the contract and as determined by the Commissioner of the Oregon Bureau of Labor and Industries, or in the case of a Federal-Aid project, the wage determination decision of the Federal Secretary of Labor, along with conformance to ORS 279C, as may be applicable to the supplying of the services and/or materials called for in the bid.

B. Every contractor and subcontractor shall pay workers not less than the specified minimum hourly rate of wage for each trade or occupation in each locality. When a public works project is subject to Davis-Bacon Act (40 U.S.C. 3141 et seq) that would otherwise be subject to state prevailing wages, if the state prevailing rate of wage is higher than the federal prevailing rate of wage, the contractor and every subcontractor on the project shall pay at least the state prevailing rate of wage.

C. Each worker in each trade or occupation employed in the performance of the contract either by the contractor, subcontractor or other person doing or contracting to do or contracting for the whole or any part of the work on the contract, must be paid not less than the applicable state prevailing rate of wage in accordance with ORS 279C.383 and 279C.840, or the applicable federal prevailing rate of wage, whichever is higher.

1.02 GENERAL REQUIREMENTS

A. If a dispute arises as to what the prevailing wage rate for any class of worker is, and if the dispute cannot be settled by the parties involved, it may be referred to the Commission of the Bureau of Labor and Industries, State of Oregon, for final determination. The Wage Rates are minimum rates only and the Owner will not consider any claims or additional compensation because of payment made by Contractor or a Sub-Contractor of any wage rate in excess of the prevailing rate.

B. Prevailing Wage Rates:

1. Pursuant to ORS Ch. 279C.800 - 279C.870, "Prevailing Wage Rates for Public Works Contracts in Oregon," effective July 1, 2022, and amendments, if any, are bound hereinafter and are included as a part of this Specification.

C. Other requirements related to Prevailing Wage are listed in Section 00 5000 – Agreement for Stipulated Sum.

PART 2 PRODUCTS - NOT USED

PART 3 EXECUTION - NOT USED

END OF SECTION

ARTICLE 11 - INSURANCE AND BONDS

Revise 11.1.2: Add the following:

The insurance required by 11.1.1 shall be written for not less than the following limits, or greater if required by law and underwritten by an insurance company rated A or A+ by A.M. Best & Co.

1. **Workers' Compensation:** Statutory
2. **Comprehensive General Liability** (**including Premises-Operations:** Independent Contractor's Protective; Products and Completed Operations; Explosion, Underground & Collapse; Broad-Form Property Damage, Blanket Contractual Liability, Personal Injury with Employment Exclusion Deleted):

   (a) Bodily Injury
   $2,000,000 Each Occurrence
   $4,000,000 Annual Aggregate

   (b) Property Damage
   $2,000,000 Each Occurrence
   $4,000,000 Annual Aggregate

   (c) Products and Completed Operations to be maintained for two (2) years after final payment.

   (d) Property Damage Liability Insurance shall provide X, C and U coverages.
3. **Comprehensive Automobile Liability:**

   (a) Bodily Injury
   $1,000,000 Each Person
   $1,000,000 Each Occurrence

   (b) Property Damage
   $1,000,000 Each Occurrence
4. The Owner shall be named as the Certificate Holder.
5. In addition, furnish true umbrella coverage, which provides excess limits over the primary layer and broader scope, in an amount not less than $2,000,000.
6. Insurance shall be written by a firm licensed to do business in the State of Oregon and as approved by the Owner. The Owner's specification or approval of this insurance or of its amount shall not relieve or decrease the liability of the Contractor under the Contract Documents or otherwise.

11.1.3: Add the following:

The Contractor shall furnish one copy of the General Liability and Automobile Liability policy. The policies shall name the Jackson County School District 5 and its members, partners, officers, directors, agents, and employees, and the successors in interest of the foregoing, as Certificate Holder, using ISO additional insureds endorsement CG 20 10 11 85 or a substitute providing equivalent coverages within ten (10) days after the Owner issues a "Notice of Intent to Award Contract". The Contractor shall furnish to the Owner copies of any subsequently issued endorsements amending, modifying, altering or restricting coverage or limits.

END OF SECTION

PART 1 GENERAL

1.01 PROJECT

A. Project Name: District Wide HVAC Upgrades - Bellview Elementary School

B. Owner's Name: Ashland School District

C. Architect/Consultant's Name: MFIA, Inc.

D. The Project consists of the construction of:

1. New controls for:

   a. 3 single constant volume units with chilled water, heating water coils, air-side economizer. These are three new units to replace other systems in 3 classrooms not previously served by the chiller.

   b. 3 space pressure relief fans

   c. Space temperature sensors for 3 I.T. closets

2. Mechanical revisions:

   a. Replace existing air-cooled chiller with new under alternate #1

   b. Add 3 mechanical room relief plenum system fans with new discharge hood

   c. Modify existing single zone heating and ventilation AHU for gym to include chilled water coil and SZ VAV operation (motor replacement). This includes modification of the unit line voltage panel with the addition of a VFD.

   d. Salvage to owner 2 split systems

   e. Replace chilled water pumps with slightly larger units

   f. Add isolation valves at the boilers for true lead-lag operation via the Aerco boil control panel

   g. Install 3 new air handlers with heating and chilled water coils for HVAC needs of three existing classrooms. This includes distribution ductwork, chilled water, and heating water piping.

3. Electrical revisions:

   a. Upgrade Electrical main service panel for larger chiller breaker under alternate #1. This involves on site modification of the panel per U.L. guidelines.

   b. New connections for new and modified mechanical devices

1.02 CONTRACT DESCRIPTION

1.03 WORK BY OWNER

A. Items noted OFOI (Owner-Furnished, Owner-Installed) will be supplied and installed by Owner before Substantial Completion. Some items include:

B. Items noted OFCI (Owner-Furnished, Contractor-Installed) will be supplied by the Owner for installation by Contractor before Substantial Completion. Some items include:

C. Items noted OFOICC (Owner Furnished, Owner Install, Contractor Coordinated) will be supplied by the Owner, installed by the Owner's contractor, but the responsibility of the Contractor to coordinate installation before Substantial Completion.

1.04 OWNER OCCUPANCY

A. Owner intends to occupy the Project upon Substantial Completion

B. Cooperate with Owner to minimize conflict and to facilitate Owner's operations.

C. Schedule the Work to accommodate Owner occupancy.

1.05 CONTRACTOR USE OF SITE AND PREMISES

A. Except as otherwise stipulated herein, Contractors will have complete use of the Premises within the boundaries of the project as shown on the Drawings for the execution of the Work.

B. The possession, use, or distribution of illicit drugs and alcohol on the Owner's premises is prohibited. Prescription medications brought to the project site shall be in the original container bearing the name of the drug, the name of the physician and the prescribed dosage.

C. TOBACCO FREE INSTITUTION: All bidders shall comply with OAR 581.021.0110 and ORS 326.051 regarding Tobacco Use on Public Grounds. For the purpose of this document "tobacco" is defined to include any lighted or unlighted cigarette, cigar, pipe, clove cigarette, and any other smoking product, spit tobacco, also known as smokeless, dip, chew, snuff, in any form, nicotine or nicotine delivering devices, chemicals or devices that produce the physical effect of nicotine substances or any other tobacco substitute (e.g., e-cigarettes). This does not include FDA approved nicotine replacement therapy products used for the purpose of cessation. No employee, sub-contractor, material supplier, or project visitor is permitted to smoke, inhale, dip, or chew or sell tobacco at any time, <u>including non-education hours.</u>

1. In any building, facility; or
2. On education facility grounds, athletic grounds, or parking lots.

D. Tools and building materials shall never be left out when an unsecured work area is vacated.

E. Ladders and scaffolding will be taken down when an unsecured work area is vacated.

F. Open holes and other tripping hazards shall be fenced or barricaded when an unsecured work area is vacated.

G. "Secured Work Area" is defined as an area having a perimeter cyclone fence at least 6 feet in height, with gates which close and lock so that no casual entrance is possible by unauthorized personnel.

H. Operations resulting in vapors, emissions or flying objects shall be conducted in such a way as to prevent exposure to any unprotected parties or property.

1.06 WORK SEQUENCE

1.07 DUST PROTECTION AND SAFETY BARRIERS

A. The Contractor shall erect temporary Dust and Safety Barriers around all of the Construction Operations to keep dust and debris within the localized work area, and to protect the owner, staff, and the public from construction activities. Additional requirements may be required if airborne dust is judged by the Owner to be a problem.

B. The Contractor shall take precautions to protect existing smoke detectors from damage or deterioration from dust caused by work of this contract.

1.08 OVERTIME WORK

A. The Contractor shall notify the Owner in writing, at least 48 hours in advance of any overtime work, including nights, weekends, and holidays. Do no overtime work without Owner's prior approval.

B. The Contractor shall reimburse the Architect and Owner for any expenses incurred by them because of Contractor's overtime work.

1.09 WORK IN PUBLIC RIGHT-OF-WAY

A. The Contractor shall obtain any required Permits, pay Permit Fees, arrange for inspections by Regulatory Agencies, and comply with governing Regulatory Agency requirements.

1.10 PROTECTING EXISTING UTILITIES

A. Original Building Drawings and Site Survey Drawings indicate approximate location of any known, concealed Utility Lines. Before starting work, Contractor shall determine exact location of any of these Lines that could be damaged by Contract Work.

B. Contractor shall assume that other unknown Utility Lines do exist, and Contractor shall proceed with caution when working in areas that could conceal unknown Utilities.

C. If such Utility Lines are encountered, immediately request disposition instructions from Architect.

D. If Utility Lines are damaged; remove, repair, or replace Lines as directed. Additional compensation and/or extension of time, if any, caused by removing, repairing, or replacing Lines will be determined in accordance with General Conditions.

1.11 PROTECTING EXISTING LANDSCAPING & TREES

A. Protect existing Trees, not designated for removal, against damage caused by work of this contract.

B. Provide necessary Fencing and Barricades. Erect prior to Work, and unless otherwise instructed, remove after Work completion.

C. Prohibit Earth stockpiling, Material storage, and Vehicle Parking and Traffic within Drip-line of Trees.

D. Prohibit dumping of Refuse, Chemicals, and other Materials and puddling or running Water which may injure Plant growth including Root systems.

E. Prohibit Foot and Vehicle Traffic which may compact Soil over Root Systems.

F. Prohibit any unnecessary cutting, breaking and skinning of Branches and Roots, and prohibit skinning and bruising of Bark. All tree pruning activities shall be conducted by a certified arborist.

G. Prohibit all cutting, breaking, and skinning of branches and roots, and skinning or bruising of bark of any trees within the street Right of Way. Consult with a certified arborist and the

Authority having jurisdiction prior to starting and construction activities that may threaten to damage street trees.

H. Prohibit Fires, High-heat and Smoke adjacent to Trees.

I. Repair or replace with plants of equal size, any material damaged by Construction Operations.

J. Where damaged Trees cannot realistically be repaired or replaced, pay Owner, as Liquidated Damage, value of Trees as determined by Council of Tree & Landscape Appraisers and as distributed by International Society of Arborculture. Copies can be obtained from Society at Box 71, Urbana, IL 61801.

1.12 PROTECTING EXISTING SUBGRADE

A. Contractor shall protect against damage, existing Subgrade and Earthwork provided under this Contract.

B. Where necessary to accomplish required protection, provide additional Temporary Fill or other approved Cover over Work to be protected.

1.13 PROTECT EXISTING STRUCTURES

A. Contractor shall protect against damage, existing building parts not scheduled for repair or remodel under this contract.

B. Where necessary to accomplish required protection, provide additional Temporary barricades, cushioning, or other approved Cover over material to be protected.

1.14 HAZARDOUS MATERIALS

A. Building Materials Containing Asbestos and Lead have been found in this building in the past. The Owner has previously removed or encapsulated most of the asbestos. By this notice, the Contractor and the Sub-contractors, and their workers, are asked to be aware of the possible presence of Asbestos Bearing Materials, lead and other hazardous materials and if found, or even suspected, to immediately stop work in the area, and notify the Architect and the Owners Project Mnager of the location and condition. A separate independent contract will be issued by the Owner to have the suspected material tested and if needed removed or encapsulated.

B. The Contractor and Sub-contractors, and their workers shall be extremely careful when working around any asbestos or encapsulated asbestos materials, and take any necessary precautions to avoid disturbing the asbestos or the encapsulation materials. If the asbestos or the encapsulation is disturbed, immediately stop work in the area, and notify the Engineer and the Owners Facility Manager of the location and condition.

1.15 CRIMINAL HISTORY CHECK / PHOTO ID

A. The names of all Contractor and all Subcontractor employees who will be on the job site for more than one day must be submitted to the District. These employees shall fill out a criminal history form provided by the District. Criminal history checks will be run through the Oregon State Police as provided for in ORS 326.603. The District shall bear the cost of processing such Criminal history checks.

1. Through the signature on the criminal history form, authorization is also given to HMKCO and its representative to investigate this information. Further, with this signature, consent is given to all governmental agencies, public or private

   companies and individuals to release information regarding the individual to the HMKCO and to their representative. The District shall bear the cost of processing such Criminal history checks.

B. In accordance with ORS 326.603(8) the District is required to terminate the employment or

contract status of any individual who refuses to consent to a criminal history check of to be fingerprinted or falsely swears to the non-conviction of any crime.

C. In accordance with ORS 326.603(7)(a) no individual found to have been convicted of any crime listed in ORS 342.143 or of an attempt to commit one of the listed crimes shall be allowed to work on any District site.

1. It is vital that employees are instructed to accurately complete criminal history forms. Crimes listed in ORS 342.143 which automatically bar an individual from employment with or contracting with the District are primarily crimes of violence, crimes against children, and sex related crimes. However, falsely swearing that you have not been convicted of a crime obligates the District to terminate employment or contract status even if the crime is not listed in ORS 342.143.

D. All employees working on site shall wear a Name and Photo Identification Badge. The Contractor shall provide all Photo ID badge. Badge shall state Ashland School District, name of the project, employee name, and company they represent.

PART 2 PRODUCTS - NOT USED

PART 3 EXECUTION - NOT USED

END OF SECTION

PART 1 GENERAL

1.01 SECTION INCLUDES

A. Procedures for preparation and submittal of applications for progress payments.

B. Documentation of changes in Contract Sum and Contract Time.

C. Change procedures.

D. Correlation of Contractor submittals based on changes.

E. Procedures for preparation and submittal of application for final payment.

F. Schedule of Values.

G. Payments for products stored off site.

1.02 RELATED REQUIREMENTS

A. Section 00 5000 - Agreement Form: Contract Sum, retainages, payment period, monetary values of unit prices.

B. Section 00 6000 - General Conditions and Document 00 8000 - Supplementary Conditions: Additional requirements for progress payments, final payment, changes in the Work.

C. Section 00 7343 - Prevailing Wage Rates.

1.03 SUBMITTALS

A. Submit a preliminary draft to the Consultant 3 weeks prior to the submittal for the first Application. The purpose preliminary draft is to confirm the level of detail required by the Design Team. The Contractor is to make adjusted requested by the Consultant. The level of detail may include values as separate lines (entities) for each Specification Section. The Consultant will not review any Application submitted until changes requested by the Consultant to the preliminary draft have been incorporated.

1.04 SCHEDULE OF VALUES

A. Form to be used: AIA G703 or equivalent.

B. Electronic media printout including equivalent information will be considered in lieu of standard form specified; submit draft to Consultant for approval.

C. Forms filled out by hand will not be accepted.

D. Submit Schedule of Values in duplicate within 15 days after date of Owner-Contractor Agreement.

1. The purpose of the preliminary draft is to confirm the level of detail required by the Design Team, and the Contractor is to make adjustments as requested. The Consultant will not review any Application submitted until changes requested by the Consultant to the preliminary draft have been incorporated.

E. Format: Utilize the Table of Contents of this Project Manual. Identify each line item with number and title of the specification Section. Identify the following.

1. Each major Work Item.

2. Each subcontracted Work Item. For each major Subcontract (i.e. mechanical, electrical and plumbing), list products and operations of that Subcontract as separate line items. List labor and materials seperately for each major subcontractor.

3. Any Products to be stored, for which separate payments will be requested.

F. Include separately from each line item, a direct proportional amount of Contractor's overhead and profit.

G. Revise schedule to list approved Change Orders, with each Application For Payment.

H. Round off values to nearest dollar.

I. Sum of values listed shall equal total Contract Sum.

J. Substantiating Data: When requested by Consultant, submit justifying Substantiating Data and Line Item Amounts in question.

1.05 APPLICATIONS FOR PROGRESS PAYMENTS

A. Payment Period: Monthly.

B. Form to be used: AIA G702 and G703.

C. Electronic media printout including equivalent information will be considered in lieu of standard form specified; submit sample to Consultant for approval.

D. Forms filled out by hand will not be accepted.

E. Execute certification by signature of authorized officer.

F. Use data from approved Schedule of Values. Provide dollar value in each column for each line item for portion of work performed and for stored products.

G. List each authorized Change Order as a separate line item, listing Change Order number and dollar amount as for an original item of Work. Include individual line items for change orders involving multiple items.

H. Submit one digital copy in PDF format of each Application for Payment.

I. Include the following with the application:

1. Construction progress schedule, revised and current as specified in Section 01 3216.

2. Payment for materials and equipment stored off the site shall be conditioned upon compliance by the Contractor with procedures satisfactory to the Owner.

J. When Consultant requires substantiating information, submit data justifying dollar amounts in question. Provide one copy of data with cover letter for each copy of submittal. Show application number and date, and line item by number and description.

K. Submit Applications for Payment to Consultant at times stipulated below.

L. When Consultant finds Application properly completed and correct, Consultant will transmit 3 copies of Certificate for Payment to Owner for approval of payment, with one copy to Contractor, and one retained for files.

1.06 ALTERNATE CONSTRUCTION PAYMENT MANAGEMENT SYSTEMS:

A. Nothing contained herein would prohibit the Contractor from proposing the use of a Construction Payment Management System that substantially complies with the requirements of this section. The contractor shall pay all additional fees associated with the Owner and Consultant's use of this system.

1.07 PAYMENT FOR PRODUCTS STORED OFF THE PROJECT SITE

A. When delay or added cost to Owner can be avoided by storing Products off Site, Owner will make payment to Contractor for said Products provided that

B. Contractor shall:

1. Locate Storage Facilities within 20 miles of the Consultant's Office or the Project Site.

2. Make Storage Facilities available for Consultant's visual inspection.

3. Segregate and label Stored Products for specified Project.

4. Assume all risk for loss.

5. Assume responsibility for exceeding Product "Shelf-Life".

6. Protect Stored Products and provide applicable Insurance against their damage, discoloration, and theft, listing the Owner and any Mortgagee as Additional Named Insured.

7. Submit itemized Inventory and Schedule of Values for Stored Products together with Certificate of Insurance.

8. Submit payment requests to Owner as part of Contractor's regular Progress Payment Request. Payment requests can only be for the actual invoiced amount to the contractor or sub-contractor by their respective material supplier. Provide copies of invoice to justify amount requested.

9. Reimburse Owner for damages sustained if Stored Products are not delivered to Jobsite when needed.

10. Submit to Owner, with copy to Consultant, a written Waiver of Lien insuring Owner against claims for unpaid Storage Costs.

11. Upon receipt of payment from Owner, prepare and issue to Owner, with a copy for Consultant, and any Mortgagee, a Bill of Sale for Stored Products.

1.08 PREVAILING WAGE PAYMENT CERTIFICATION

A. Submit Prevailing Wage Payment Certification Forms as required by Section 00 7343.

1.09 APPLICATION PAYMENT SCHEDULE

A. Within 15 Days, following Owner's approval of payment of in-order Application for Payment, the Owner will:

1. Until Substantial Completion, pay Ninety-Five Percent (95%) as defined in General Conditions during the previous month, as estimated by Consultant.

B. After execution of Certificate of Substantial Completion, and within 15 days, following Owner's approval of payment of the next in-order Application for Payment, the Owner will pay:

1. Balance due under Contract, excluding a Retainage Amount of at least $1,000, or double the estimated value of uncompleted and/or unacceptable portions of Work, whichever is the greater amount.

C. Thirty (30) days after final inspection and acceptance by Owner, and within 15 days following Owner's approval of payment of final in-order Application for Payment, the Owner will pay:

1. Balance due under Contract, provided Work be then fully completed and Contract be then fully performed.

1.10 MODIFICATION PROCEDURES

A. Submit name of the individual authorized to receive change documents and who will be responsible for informing others in Contractor's employ or subcontractors of changes to the Contract Documents.

B. For minor changes not involving an adjustment to the Contract Sum or Contract Time, Consultant will issue instructions directly to Contractor.

C. For other required changes, Consultant will issue a Construction Change Directive document signed by Owner instructing Contractor to proceed with the change, for subsequent inclusion in a Change Order.

1. The document will describe the required changes and will designate method of determining any change in Contract Sum or Contract Time.

2. Promptly execute the change.

D. For changes for which advance pricing is desired, Consultant will issue a Proposal Request document that includes a detailed description of a proposed change with supplementary or revised drawings and specifications, a change in Contract Time for executing the change with a stipulation of any overtime work required and the period of time during which the

requested price will be considered valid. Contractor shall prepare and submit a fixed price quotation within 7 calendar days.

E. Contractor may propose a change by submitting a request for change to Consultant, describing the proposed change and its full effect on the Work, with a statement describing the reason for the change, and the effect on the Contract Sum and Contract Time with full documentation and a statement describing the effect on Work by separate or other contractors. Document any requested substitutions in accordance with Section 01 6000.

F. Computation of Change in Contract Amount: As specified in the Agreement and Conditions of the Contract.

1. For change requested by Consultant for work falling under a fixed price contract, the amount will be based on Contractor's price quotation.

2. For change requested by Contractor, the amount will be based on the Contractor's request for a Change Order as approved by Consultant.

3. For pre-determined unit prices and quantities, the amount will based on the fixed unit prices.

4. For change ordered by Consultant without a quotation from Contractor, the amount will be determined by Consultant based on the Contractor's substantiation of costs as specified for Time and Material work.

G. Substantiation of Costs: Provide full information required for evaluation.

1. On request, provide the following data:

a. Quantities of products, labor, and equipment.

b. Taxes, insurance, and bonds.

c. Overhead and profit.

d. Justification for any change in Contract Time.

e. Credit for deletions from Contract, similarly documented.

2. Support each claim for additional costs with additional information:

a. Origin and date of claim.

b. Dates and times work was performed, and by whom.

c. Time records and wage rates paid.

d. Invoices and receipts for products, equipment, and subcontracts, similarly documented.

3. For Time and Material work, submit itemized account and supporting data after completion of change, within time limits indicated in the Conditions of the Contract.

H. Execution of Change Orders: Consultant will issue Change Orders for signatures of parties as provided in the Conditions of the Contract.

I. After execution of Change Order, promptly revise Schedule of Values and Application for Payment forms to record each authorized Change Order as a separate line item and adjust the Contract Sum.

J. Promptly revise progress schedules to reflect any change in Contract Time, revise sub-schedules to adjust times for other items of work affected by the change, and resubmit.

K. Promptly enter changes in Project Record Documents.

1.11 APPLICATION FOR FINAL PAYMENT

A. Prepare Application for Final Payment as specified for progress payments, identifying total adjusted Contract Sum, previous payments, and sum remaining due.

B. Application for Final Payment will not be considered until the following have been accomplished:

1. All closeout procedures specified in Section 01 7000.

2. Submit final Application for Payment with unconditional lien releases and supporting documentation not previously submitted and accepted in accordance with requirements of General Conditions.

PART 2 PRODUCTS - NOT USED

PART 3 EXECUTION - NOT USED

END OF SECTION

PART 1 GENERAL

1.01 SECTION INCLUDES

A. Description of Alternates.

B. Procedures for pricing Alternates.

1.02 RELATED REQUIREMENTS

A. Document 00 2113 - Instructions to Bidders: Instructions for preparation of pricing for Alternates.

B. Document 00 4100 - Bid Form: List of Alternates.

1.03 SUBMISSION REQUIREMENTS

A. Indicate variation of Bid Price for Alternates described below. The Bid Form requests a "difference" in Bid Price by adding to or deducting from the Base Bid Price.

1.04 ACCEPTANCE OF ALTERNATES

A. Alternates quoted on Bid Forms will be reviewed and accepted or rejected at Owner's option. Accepted Alternates will be identified in the Owner-Contractor Agreement.

B. Coordinate related work and modify surrounding work to integrate the Work of each Alternate.

C. Bids will be evaluated on the Base Bid price plus any or all of the Alternates intended to be exercised by the Owner. The order of the Alternates listed here does not represent the order in which any of these Alternates will be exercised.

1.05 PROCEDURES

A. Coordination: Modify or adjust affected adjacent work as necessary to completely integrate work of the alternate into Project.

1. Include as part of each alternate, miscellaneous devices, accessory objects, and similar items incidental to or required for a complete installation whether or not indicated as part of alternate.

1.06 SCHEDULE OF ALTERNATES

A. Alternate No. 1 – Replace existing air-cooled chiller with new
1a – Upgrade electrical main service panel for larger chiller breaker

Alternate No. 2 – Replacement of all control devices for new system

PART 2 PRODUCTS - NOT USED

PART 3 EXECUTION - NOT USED

END OF SECTION

PART 1 GENERAL

1.01 SECTION INCLUDES

A. Preconstruction meeting.

B. Progress meetings.

C. Submittals for review, information, and project closeout.

D. Number of copies of submittals.

E. Submittal procedures.

1.02 RELATED REQUIREMENTS

A. Section 00 6000 - General Conditions.

B. Section 01 3216 - Construction Progress Schedule: Form, content, and administration of schedules.

C. Section 01 7000 - Execution and Closeout Requirements: Additional coordination requirements.

D. Section 01 7800 - Closeout Submittals: Project record documents.

1.03 CONSTRUCTION ORGANIZATION & START-UP

A. Responsible Parties:

1. Immediately following Contract execution, Owner will and Contractor shall identify who, within their respective organizations, will be responsible for Project Coordination.

B. The Contractor shall establish on-site Lines of Authority and Communications including the following:

1. Schedule attendance at Preconstruction Meeting and schedule and conduct Progress Meetings as specified in Section 01 3000.

2. Establish procedures for Intra-project Communications including:

a. Submittals.

b. Reports & Records.

c. Recommendations.

d. Coordination Drawings.

e. Schedules.

f. Resolution of Conflicts.

3. Technical Documents Interpretation:

   a. Consult with Consultant to obtain interpretation.

   b. Assist in resolution of questions or conflicts which may arise.

   c. Transmit written interpretations to Subcontractors and to other concerned parties.

4. Permits & Approvals:

   a. Verify that Subcontractors have obtained required Permits and Inspections for Work and for Temporary Facilities.

5. Control use of Site:

   a. Supervise Field Engineering and Project Layout.

   b. Allocate Field Office Space and Work and Storage Areas for use of each Subcontractor.

1.04 COORDINATING SUBCONTRACTORS' WORK

A. Coordinate the Work of all Subcontractors and make certain that, where the Work of one Trade is dependent upon the Work of another Trade, the Work first installed is properly placed, installed, aligned, and finished as specified or required to properly receive subsequent Materials applied or attached thereto.

B. Direct Subcontractors to correct defects in Substrates they install when Subcontractors of subsequent Materials have a reasonable and justifiable objection to such surfaces.

C. Do not force Subcontractors to apply or install Products to improperly placed or improperly finished Substrates that would result in an unsatisfactory or unacceptable finished Product.

1.05 COORDINATING WORK WITH WORK OF OWNER OR OTHER CONTRACTS

A. Coordinate, and make certain that, where Work of either party is dependent upon the other party, the Work first performed is properly placed, installed, aligned, and finished as required to permit the proper installation of the Work following.

B. If the Owner's Work in any way interferes with the Contractor's Work, so notify the Owner sufficiently in advance so that the Owner has reasonable time to make necessary adjustments.

C. If the Contractor's Work in any way interferes with Owner's Work, so notify the Owner as soon as possible. If the Contractor's Work must be modified to accommodate the Owner's Work, except as described elsewhere in this Specification, the Contract Sum and/or the Contract Time will, when necessary be adjusted by a Change Order.

D. Mechanical & Electrical Equipment start-up:

   1. Coordinate check-out of Utilities, Operational Systems, and Equipment.

2. Assist in initial start-up and testing.

3. Record starting dates of Systems and Equipment operation.

E. At completion of Work of each Subcontract, conduct inspection to assure that:

1. Work is acceptable.

2. Specified cleaning has been accomplished, and Temporary Facilities and Debris has been removed from Site.

F. Substantial Completion: See Section 002113 1.13

PART 2 PRODUCTS - NOT USED

PART 3 EXECUTION

3.01 PRECONSTRUCTION MEETING

A. Owner will schedule a meeting after Notice of Award.

B. Attendance Required:

1. Owner.

2. Consultant.

3. Contractor.

4. Contractor's Superintendent.

5. Major Subcontractors.

C. Agenda:

1. Introductions.

2. Execution of Owner- Contractor Agreement.

3. Submission of executed bonds, insurance certificates and background checks.

4. Description of Project

5. Distribution of Contract Documents.

6. Submission of list of Subcontractors, list of Products, schedule of values, and progress schedule.

7. Designation of personnel representing the parties to Contract, Owner and Consultant.

8. Procedures and processing of field decisions, submittals, substitutions, applications for payments, proposal request, Change Orders, and Contract closeout procedures.

    a. Written Change Order requests required

    b. Supporting back-up will be required for all Change Orders

    c. Describe Contractor's procedure for review and oversight in the preparation of Change Orders

    d. Mark-up limitations on Change Orders (See General Conditions Article 7.1.4)

    e. Processing time required

    f. Applications for Payment

        1) Use AIA documents G702 and G703 latest edition

        2) Provide 4 signed and notarized copies

        3) Wage certifications to be attached

9. Scheduling, start date and date of substantial completion.

10. Building permit status.

11. Prevailing wage requirements.

12. Public Agency submittal of RESPONSIBILITY DETERMINATION FORM to Construction Contractor's Board.

13. Communications.

14. Role of Owner's Project Manager.

15. Employee Security Screening and Identification Badging.

16. Submittals required per Contract Documents.

17. MSDS Information

18. Erosion control procedures

19. Waste management procedures

20. Environmental quality requirements

21. Hazardous materials

22. Construction activities, working hours, use of site and building.

23. Staging and parking areas.

24. Temporary facilities and utilities.

25. Request for information and clarification of design

26. Correction of Defects.

27. Weekly on-site progress meetings.

28. Safety and Emergency Procedures.

29. Verify that Contractor's Mandatory Drug Testing Program is in place.

30. Daily Clean-up

31. Project Closeout, substantial completion, final completion.

32. Record drawings and Operations and Maintenance Manuals

33. Tour of Project by Owner's staff and guests (if applicable)

34. Additional Comments

D. Consultant will record minutes and distribute copies within [five] days after meeting to participants, with digital copies to Owner, participants, and those affected by decisions made.

3.02 PROGRESS MEETINGS

A. Schedule and administer meetings throughout progress of the Work at weekly intervals.

B. Make arrangements for meetings, prepare agenda with copies for participants, preside at meetings.

C. Attendance Required:

1. Contractor.

2. Owner.

3. Consultant.

4. Contractor's Superintendent.

5. Major Subcontractors.

D. Agenda:

1. Review minutes of previous meetings.

2. Review of Work progress.

3. Field observations, problems, and decisions.

4. Identification of problems that impede, or will impede, planned progress.

5. Review of submittals schedule and status of submittals.

6. Review of off-site fabrication and delivery schedules.

7. Maintenance of progress schedule.

8. Corrective measures to regain projected schedules.

9. Planned progress during succeeding work period.

10. Coordination of projected progress.

11. Maintenance of quality and work standards.

12. Effect of proposed changes on progress schedule and coordination.

13. Other business relating to Work.

E. The Owner's Project Manager will record minutes and distribute copies within five days after meeting to participants, with digital copies to Contractor, Owner, participants, and those affected by decisions made.

3.03 PRE-INSTALLATION CONFERENCES

A. When required in individual specification sections, the Contractor shall convene a pre-installation meeting prior to commencing work of that section.

B. Require attendance of parties directly affecting, or affected by, work of the specific section.

C. Notify Consultant minimum four days in advance of meeting date.

D. The Contractor shall be responsible to prepare agenda and preside at meeting:

1. Review conditions of installation, preparation and installation procedures.

2. Review coordination with related work.

E. The Contractor shall be responsible to record minutes and distribute copies within four days after meeting to participants, with copies to Consultant, Owner's Project Manager, participants, and those affected by decisions made.

3.04 CONSTRUCTION PROGRESS SCHEDULE - SEE SECTION 01 3216

3.05 SUBMITTALS FOR REVIEW

A. When the following are specified in individual sections, submit them for review:

1. Product data.

2. Shop drawings.

3. Samples for selection.

4. Samples for verification.

5. Other information required in individual specification sections.

B. Submit to Consultant for review for the limited purpose of checking for conformance with information given and the design concept expressed in the contract documents.

C. Product Data:

1. Clearly mark each copy to identify pertinent Products.

2. Show performance characteristics and capacities.

3. Show dimensions, field dimensions, and required clearances.

4. Show wiring and piping diagrams, and controls.

5. Show standard schematic drawings and diagrams:

a. Modify to delete information not applicable to Work.

b. Supplement standard information to provide information specifically applicable to Work.

c. Assure that any photo copied material is clearly legible or provide all original material.

D. Samples will be reviewed only for aesthetic, color, or finish selection.

E. After review, provide copies and distribute in accordance with SUBMITTAL PROCEDURES article below and for record documents purposes described in Section 01 7800 - Closeout Submittals.

3.06 SUBMITTALS FOR INFORMATION

A. When the following are specified in individual sections, submit them for information:

1. Design data.

2. Certificates.

3. Test reports.

4. Inspection reports.

5. Manufacturer's instructions.

6. Manufacturer's field reports.

7. Other information required in individual specification sections.

8. Other types indicated.

B. Submit for Consultant's knowledge as contract administrator or for Owner. No action will be taken.

3.07 SUBMITTALS FOR PROJECT CLOSEOUT

A. Submit Correction Punch List for Substantial Completion.

B. Submit Final Correction Punch List for Substantial Completion.

C. When the following are specified in individual sections, submit them at project closeout:

1. Project record documents.

2. Operation and maintenance data.

3. Warranties.

4. Bonds.

5. Other information required in individual specification sections.

6. Other types as indicated.

D. Submit for Owner's benefit during and after project completion.

3.08 NUMBER OF COPIES OF SUBMITTALS

A. Electronic Documents: Submit one electronic copy in PDF format; an electronically-marked up file will be returned. Create PDFs at native size and right-side up; illegible files will be rejected.

B. Samples: Submit the number specified in individual specification sections; two of which will be retained by Consultant.

1. After review, produce duplicates.

2. Retained samples will not be returned to Contractor unless specifically so stated.

3. Show full range of color, texture & pattern.

3.09 SUBMITTAL PROCEDURES

A. Shop Drawing Procedures:

1. Prepare accurate, drawn-to-scale, original shop drawing documentation by interpreting the Contract Documents and coordinating related Work.

2. Generic, non-project specific information submitted as shop drawings do not meet the requirements for shop drawings.

B. Transmit each submittal with a copy of approved submittal form.

C. Transmit each submittal with a transmittal form that clearly describes submittal contents and the quantity of items delivered.

D. Sequentially number the transmittal form. Revise submittals with original number and a sequential alphabetic suffix.

E. Identify Project, Contractor, Subcontractor or supplier; pertinent drawing and detail number, and specification section number, as appropriate on each copy.

F. Apply Contractor's stamp, signed or initialed certifying that review, approval, verification of Products required, field dimensions, adjacent construction Work, and coordination of information is in accordance with the requirements of the Work and Contract Documents.

G. Deliver submittals to Consultant at business address.

H. Schedule submittals to expedite the Project, and coordinate submission of related items.

I. For each submittal for review, allow 15 days excluding delivery time to and from the Contractor.

J. Identify variations from Contract Documents and Product or system limitations that may be detrimental to successful performance of the completed Work.

K. Notify Consultant in writing, at submission time, of any deviations in Submittals from Contract Document requirements.

L. Provide space for Contractor and Consultant review stamps.

M. When revised for resubmission, identify all changes made since previous submission.

N. Distribute reviewed submittals as appropriate. Instruct parties to promptly report any inability to comply with requirements.

O. Submittals not requested will not be recognized or processed.

P. Submit Shop Drawings, Product Data, and Samples only for those Items specifically required. The Consultant will not be obligated to review Shop Drawings, Product Data, or Samples other than those required by the Contract Documents.

Q. Perform no Work or Fabrication requiring Submittal until Consultant approves Submittal.

END OF SECTION

PART 1 - GENERAL

1.01 REQUIREMENTS INCLUDED

A. Related Requirements

B. General Requirements

C. Definition of Schedule Documents and Submittal Requirements

D. Contractor's Schedule Management

E. Coordination

F. Schedule Format Requirements

G. Weather Impacts and Delays

H. Schedule Updates and Schedule (Network) Revisions

I. Time Impact Analysis for Changed Conditions

J. Recovery Schedule

K. Timeliness of Schedule Document Submittals

L. Owner Review of Schedule Submittals

1.02 RELATED REQUIREMENTS

A. The General Provisions, and General Requirements of the Specifications apply to the work specified in this Section.

B. Section 00 0120 – Bidder-Designed Items and Deferred Submittals

C. Section 01 6300 – Approval For Substitution and Product Options

1.03 GENERAL REQUIREMENTS

A. The Schedules (and schedule documents) described herein are for the following purposes:

1. To define the Contractor's Baseline Plan (including logic and use of resources) for completing the Work

2. To report progress in completion of the Work

3. To evaluate any changes to the Contractor's Baseline Plan and subsequent updated plans

B. In addition, the schedule documents shall serve as a communication tool between the Owner and the Contractor, and the Contractor and its subcontractors. The Owner

encourages the Contractor to use the Schedule to establish an understanding with all parties of the assumptions regarding the Work, and the various constraints and opportunities that are possible within the plan. As the work progresses, the Contractor and the Owner's Representative will use the Schedule to assess impacts and to formulate the best methods to complete the Work on, or ahead of the contractual completion dates. The schedule documents will also be used by the Contract Administrator to evaluate the Contractor's monthly progress payment requests.

C. The Work shall be scheduled and performed pursuant to the provisions of the Contract including any specific dates for Contract completion milestones, phase completion and the like or requirements included in the General Conditions, the Owner-Contractor Agreement, or elsewhere in the Contract documents. All Contract milestone and completion dates listed in these specifications, or elsewhere in the Contract documents, represent only interface dates or major items of the Work. The Contractor is responsible for completion of all aspects of the Work in accordance with the Contract.

D. At any time throughout the course of the Work, the Owner reserves the right to require additional activities to be added to the Schedule to further define the Contractor's plan and intentions regarding the execution of the Work. In each instance, such activities or changes shall be made by the Contractor at no cost or delay to the Owner. The Owner's Representative suggestions would not waive the contractor's right to establish its means and method or its obligation to execute the project in a timely and efficient manner.

E. Should the Contractor desire or intend to complete the Work, or any portion of the Work, earlier than the specified Contract milestone, phase, or similar dates or the overall Contract completion date, the Owner will not be liable to the Contractor for any costs or other damages should the Contractor be unable to complete the Work before Contractor's earlier milestone or completion dates. The duties and obligations of Owner to the Contractor shall be consistent with and applicable only to the completion of the Work on the specified Contract milestone dates or the Contract completion dates unless the Owner and the Contractor otherwise agree in writing, formalized by a change order. The Contractor may finish early but shall not make any claims for additional time-related costs before the expiration of the specified Contract milestone, phase, or similar dates or the overall Contract completion date.

F. The services provided by the Owner's Representative, the existence of schedules, networks or any other charts or services prepared or performed by the Owner's Representative, shall in no way relieve the Contractor of the responsibility for complying with all of the requirements of the Contract documents, including, but not limited to, the responsibility for completing the Work within the Contract Time and the responsibility of planning, scheduling, and coordinating the Work.

G. It is understood that during the prosecution of certain aspects of the work, i.e., phasing; commissioning; work with possible impacts to facilities and/or tenant operations; or utility shutdowns, a separate detailed scheduled will be required. The Contractor shall prepare these schedules in a timely manner as required for distribution by the Owner's Representative to all affected parties. The Contractor shall provide these schedules at no additional cost.

H. In addition to requirements specified herein, schedules shall include the following activities specific to Owner:

1. Delivery of Operational and Maintenance Training Manuals.

2. Submittal and expected approval of manufacturer's recommended spare parts list.

3. System inspection and punch list preparation.

I. The Contractor, including his Project Manager and Superintendent shall hold an orientation meeting with Owner, wherein the Contractor presents his approach to planning the work, developing the schedules, and meeting the requirements of this Section. This orientation meeting shall be held prior to submittal of the Baseline Schedule. The Contractor shall not delay preparation of the required schedules and schedule documents prior to this meeting; however, the Contractor shall be responsible for any changes or corrections to his scheduling as a result of this meeting.

1.04 DEFINITION OF SCHEDULE DOCUMENTS AND SUBMITTAL REQUIREMENTS

A. The following outlines the schedules and schedule documents required by this section to be submitted by the Contractor. Details on each item (and all items) to be submitted are provided in further paragraphs in this Section and in referenced sections.

1. Preliminary (4-Month) Schedule: This schedule is to detail all Contractor work, including procurement activities, mobilization, submittals, and construction activities for the first four months following the date of Notice to Proceed, and be used while the Contractor is developing his baseline schedule. All critical or completion dates required in the contract shall be incorporated into this schedule. The following submittal requirements apply to the preliminary schedule:

   a. The Preliminary Schedule shall be submitted in a format and with content acceptable to the Owner's Representative and shall be submitted to the Contract Administrator no later than 10 calendar days after Notice to Proceed.

   b. For purposes of this Preliminary Schedule, the Contractor is to assume that construction activities will occur within 30 calendar days after Notice to Proceed.

   c. Allow five (5) working days for initial review and five (5) working days for resubmittal reviews by the Contract Administrator.

2. Baseline Schedule: This is a detailed schedule including a narrative of schedule status developed using the Critical Path Method (CPM). It represents the Contractor's plan for the Work from the date of award of the Contract and will be used to make the first Progress Schedule.

   a. Submittal requirements: The Baseline Schedule shall be submitted in Primavera P6 format and with content acceptable to the Owner's Representative. The Contractor shall obtain (1) perpetual license of

      Primavera P6 EPPM for use by the District PM and (1) license for use by the contractor during the contract duration.

   b. Narrative of Schedule Status: This is a narrative that describes the key aspects of the submitted schedules. The Baseline Schedule narrative shall define the key aspects of the Contractor's plan for the Work that

includes the following key sections. The narratives submitted with the Baseline Schedules are required to be stand-alone documents that do not require Baseline Schedules to be attached in order to be comprehensible:

(1) The layout and logic used in the Schedule

(2) Critical submittals

(3) Long-lead equipment and material procurement.

(4) The critical path

(5) An overall float analysis

(6) Any interface concerns with Owner

(7) Costs to date

c. Activities: The schedule shall be grouped by the following work activities:

(1) Mobilization Activities

(2) Procurement Activities

(3) Manufacturing Activities

(4) Quality Control Activities

(5) Installation Activities

(6) Testing Activities

(7) Commissioning Activities

(8) Demobilization Activities

3. Master Summary Schedule: The cost-loaded Master Summary Schedule shall be developed by the Contractor and submitted to the Contract Administrator with the Baseline Schedule and each monthly Progress Schedule.

a. The Master Summary Schedule shall show the sequence in which Contractor proposes to perform the Work, all completion dates and critical dates indicated in the Contract Documents, and the dates on which Contractor plans to start and finish major portions of the Work. The Contractor shall include enough activities in the Master Summary Schedule, so that all significant portions of the Work, critical interfaces, coordination with Owner and milestone and completion dates are addressed.

b. The Summary Schedule shall be cost-loaded, at a high level, to develop a cash flow curve.

4. Critical Path Schedule: This schedule shall show the critical path derived first from the Baseline Schedule and subsequently from the current Progress Schedule. This is a time-scaled network logic diagram, showing only the current critical path of the Work along with its current progress. In the event of near critical path work (less than 10 days of float), the Owner's Representative may request the near critical paths also be shown. The following submittal requirements apply to the Critical Path Schedule:

   a. Submittal Requirements:

      (1) Submit with Baseline Schedule.

      (2) Update and submit with the Progress Schedule.

      (3) Export Primavera P6 schedule data to the client in live file format for all submissions.

5. Progress Schedule: This is a detailed schedule, developed using the Critical Path Method (CPM), which is derived from the Baseline Schedule. The first Progress Schedule is the initial monthly progress update of the Baseline Schedule. Subsequent Progress Schedules will be submitted on a monthly basis that updates the previously issued Progress Schedule. The Progress Schedule will also be used to compare percent complete requested by the Contractor in the monthly progress payment applications, to analyze delays and impacts in all Time Impact Analyses (TIA), and to determine whether a Recovery Schedule is needed from the Contractor.

   a. Submittal requirements: Progress schedules are due monthly to coincide with the progress payment requests. The updated progress schedule will be targeted against the approved baseline and will include baseline start, finish, float, and original duration.

   b. Narrative of Schedule Status: This is a narrative that describes the key aspects of the submitted schedules. The Progress Schedule narrative shall define the key aspects of the Contractor's plan for the Work that includes the following key sections. The narratives submitted with the Progress Schedules are required to be stand-alone documents that do not require Progress Schedules to be attached in order to be comprehensible:

      (1) Progress in Last Period

      (2) Critical Path Progress and Concerns

      (3) Potential Delays and Time Impact Analyses

      (4) Submittal Status (focus on critical submittals and concerns)

      (5) Equipment and Material Delivery Status

      (6) Quality Control Status

      (7) Manufacturing Status

(8) Costs to Date

6. Weekly Short Interval Schedule: This is a three-week Look-Ahead Schedule for use in the weekly schedule review meetings. The weekly interval schedules shall include the current activities from the Progress Schedule and all other schedule information deemed necessary.

a. Submittal requirements:

(1) Provide the schedule in a format acceptable to the Owner's Representative.

(2) Submitted no later than 24 hours before the weekly schedule review meeting.

(3) Distribute the final weekly interval schedule to all field supervision no later than the next workday following the weekly schedule review meeting.

7. Recovery Schedule: This schedule will be required from the Contractor in the event that certain conditions exist such that critical or milestone dates are in jeopardy of being delayed. Recovery Schedule requirements are defined in later paragraphs of this section.

a. Submittal requirements: Submit five (5) working days after notice from the Contract Administrator that a Recovery Schedule is required.

8. Time Impact Analysis: This schedule analysis shall be part of the back-up data required from the Contractor in the event the Contractor claims that Contract changes delayed or impacted the Work and shall be included in any change proposal claiming increase in time. The Time Impact Analysis requirements are defined in later paragraphs of this section.

a. Submittal requirements: Formal submittal of the Time Impact Analysis shall be within 15 calendar days of occurrence of the delay. Failure to submit within the 15 calendar days waives the Contractor's right to claim additional costs or time as a result of such delay.

9. Schedule of Submittals: Submit per the following table:

Deliverable	Hard Copies	Electronic Copies	Submittal Due	Remarks
Preliminary (Four-Month) Schedule	2 color copies of each sort	1	10 calendar days after the Notice to Proceed	One-time submittal. Submit using same format requirements as the Baseline Schedule

Baseline Schedule	2 color copies of each sort	1	30 calendar days after the Notice to Proceed	Acceptance is prerequisite to issuance of NTP. Critical Path Schedule is integral to Baseline Schedule. **Also, see Note (1).**
Progress Schedule		1	Monthly	Critical Path Schedule is integral to Progress Schedule. **Also, see Note (1).**
Master Summary Schedule		1	With the Baseline Schedule, then Monthly	One-time submittal. Submit with the Baseline Schedule and each Progress Schedule
As-Built Schedule	Include color copy in project O&M	1	Within 30 days of substantial completion	Project schedule shall be considered as-built for work completed and updated with each progress billing. Final document shall be included in O&M
Weekly Look-Ahead Schedule	Sufficient copies for weekly meeting attendees	1	1 Electronic copy 24 hours before weekly schedule review meeting, harmonize with sufficient copies for attendee's color copies presented at OAC Meeting	
Recovery Schedule	2 color copies	1	Within 5 days of notice to submit	
Time Impact Analysis	2 color copies	1	Within 15 days of date of delay claimed	Submit with all changes requesting time extensions

Note (1) Includes Master Summary Schedule, Narrative of Schedule Status, Manpower Loading Curve, and Subcontractor Log.

1.05 CONTRACTOR'S SCHEDULE MANAGEMENT

A. Scheduling Organization: The Contractor shall provide a Contractor's Scheduling Manager (CSM) to the implementation and management of the scheduling requirements of the Contract documents. The CSM (who may be the Contractor's Project Manager, Superintendent, or other qualified staff person) shall be on site at all times during the progress of the work, or as otherwise authorized in writing by the Contract Administrator.

B. Qualifications of Contractor's Scheduling Manager:

1. The CSM shall demonstrate acceptable professional familiarity with P6 software,

hardware, and/or other scheduling systems and experience necessary to implement all scheduling requirements of the Contract in a timely and expeditious manner.

2. The Owner's Representative will monitor the performance of the CSM. The CSM's performance will be judged on the timeliness and completeness of Contractor's compliance with the scheduling requirements of the Contract documents. If the CSM fails to perform in accordance with the scheduling requirements of the Contract documents, the CSM shall, at the direction of the Contract Administrator, be replaced at no cost to Owner or delay allowable to the project.

1.06 COORDINATION

A. The Contractor shall coordinate the Work with that of Owner contractors, Owner Operations, and Owner tenants, and shall cooperate fully with the Owner's Representative in maintaining an orderly progress toward completion of the Work as scheduled.

B. A Time Impact Analysis (TIA) shall be required to support any claim by the Contractor for delay caused by failure of Owner-furnished equipment and materials to arrive as scheduled, or failure of other Owner interface work or tenants to meet their schedules. The TIA shall be based on Owner activities having the same level of predecessor and successor logic to display delay impacts as the Contractor's Work.

C. The Contractor shall inform its subcontractors of the delivery status of Owner-furnished equipment and material, and of the progress of other interfacing Owner construction work while the Work is underway.

1.07 SCHEDULE FORMAT REQUIREMENTS

A. Unless otherwise specified, the Baseline and Progress Schedules shall be produced utilizing the Microsoft Windows based Primavera P6 Project Management of the most current version.

B. The Baseline and Progress Schedules shall employ the Critical Path Method (CPM) using retained logic for the planning, scheduling and reporting of the work to be performed under this Contract. The type of schedule shall be Precedence Diagramming Method (PDM).

C. The Baseline and Progress Schedules shall include but not be limited to:

1. All Critical, Milestone, and Completion dates defined in the Contract, as well as Owner-provided equipment delivery dates.

2. Date of Contract Award, Notice To Proceed, Mobilization, Substantial Completion, and Overall Beneficial Occupancy, Completion of each Phase, Pre-final Inspections, Final Inspections, and Final Acceptance.

3. Critical procurement and submittal activities including: shop drawings and sample submittals, Owner review of submittals, re-submittals and Owner review of re-submittals, fabrication and delivery for all key, critical path, near critical path and long-lead equipment and material. Owner reserves the right to require the Contractor to add procurement activities to the schedule for any key or long-lead

equipment, materials or submittals it deems necessary to monitor the Contractor's schedule for this work.

4. Quality Control Activities, Testing, Pre-Installation Activities, Commissioning, training and closeout activities.

5. Offsite activities that interface with the Contractor's Work, including work by Owner and Owner contractors, delivery of Owner-furnished materials, utilities, agencies, critical Owner operations, Owner tenants, and other similar activities.

D. Activity Descriptions and Setup

1. The description of work by activity and activity coding shall contain the specific type of work to be done and the physical area of the work to which the activity pertains.

2. Activity boundaries shall be easily measurable, and descriptions shall be clear and concise. Activity descriptions should not be prefaced with "Begin" or "Complete." The beginning and end of each activity shall be readily verifiable, and physical progress shall be quantifiable.

3. In general, each critical path and key activity shall be associated with a single performing organization (subcontractor). For other activities, where there is similar type work in an area, organizations (subcontractors) may be grouped for a single activity. Where deemed necessary to define critical, key or unusual work, Owner reserves the right to require additional activities be added to the Contractor's schedule to provide that an activity be associated with each organization (subcontractor). The organization related to the activity shall be identified in a background sort code, such that reports sorted by organization can be made using the scheduling software. Construction Specifications Institute (CSI) codes relating to the division of the work shall be assigned to activities in the same manner described above for organizations. CSI codes are also to be assigned to background sort codes that allow reports by CSI code to be made using the scheduling software.

4. Activity durations over fifteen (15) working days shall be kept to a minimum and shall be used only for non-construction activities, such as shop drawing and sample submittals, fabrication and delivery of materials and equipment, concrete curing, and General Conditions activities. Exceptions to this shall be accepted in writing by the Contract Administrator. The duration of activities shall be in workdays.

5. Activity costs shall be limited to a maximum of Two-Hundred-Fifty-Thousand Dollars ($250,000), excluding major equipment and materials. Exceptions to this shall be accepted in writing by the Contract Administrator.

6. For critical path and near critical path activities, Contractor shall use Finish-to-Start relationships to the extent possible. Contractor shall use more activities if necessary, to use Finish-to-Start relationships in preference to use of Start-to-Start relationships. The Owner reserves the right to require the addition of activities to further define critical path and near critical path work in the Schedule.

7. Activities that constitute the controlling operations or critical path will be identified

by use of color (red). The critical path is defined as activities with total float less than one day. Near critical is defined as total float in the range of one to ten days. The critical path and near critical activities shall be less than 25 percent of the total activities in the Baseline Schedule.

8. Imposed completion dates for events other than the Milestone Dates or Completion Dates are generally not permitted. Artificial constraints (imposed start dates) are generally not permitted, except possibly for use in Owner- furnished materials, Owner interface dates and the like. Upon creating a new project schedule in the software, the option planned start and planned completion dates should be appropriately inserted. This will allow the schedule calculations to identify negative float when projected dates slip past the planned completion date. All Owner-furnished materials and Owner interface dates shall have an early start/finish and late start/finish range. All Owner dates shall be related to the Contractor's Work with predecessor and successor logic such that float is correctly calculated on Owner-furnished materials and Owner interface dates.

9. Activity numbering shall be spaced (or gapped) to allow inclusion of new activities between existing activities while still maintaining a similarity of numbering for like activities. Numbering by area, level, etc. is encouraged to assist in analysis. The numbering may be alphanumeric to allow easier identification of areas, etc. At a minimum, the following code fields should be included:

   a. RESP – Responsibility (Owner, Owner's Representative, Sub Consultants, Jurisdictions, Key Third Parties, Contractors, Sub Contractor and, Vendors)

   b. PHAS – Phases

   c. AREA – Locations

   d. STEP – Steps or Sub AREAs

   e. ITEM – Specification Section Numbers

   f. CONO – Change Order Numbers

10. Activities that have started and are in progress shall be "scheduled" on each submitted schedule. Planned durations for remaining work and planned completions of remaining work on activities shall be used. Activities shall not "ride" the data date line, with scheduled completions being the remaining durations, unless the Contractor actually plans to complete work within the remaining duration. Schedules submitted with activities "riding" the data date line will not be accepted by Owner.

11. The work breakdown and coding structure (WBS) should, at a minimum, incorporate the following:

   a. Milestones/Hammocks

   b. Deferred Approvals (by CSI, including Agency Approvals)

c. Submittals (by CSI)

d. Quality Control Activities, Pre-Installation Activities, Commissioning, Designer of Record Observations, Mock-ups

e. Work

i. mobilization

ii. Grading/Underground Utilities

iii. Foundations

iv. Structures

v. Exterior Skin and Roof

vi. Interior Construction:

a. By Floor

b. By Major Unique Functional Area

c. Electrical and MEP Equipment

d. Unique Elements

e. Equipment, including OFCI, OFOI and OFOICC

f. Start-Up, Commissioning and Test & Balance (by system and element)

g. Fire and Life-Safety and Systems Pre-Tests (by system and element)

h. Fire and Life-Safety Jurisdictional Tests and Inspections (by system and element)

i. Final Sign Offs by the Design Team and Jurisdictions

E. Schedule Layout and Sequence of Activities

1. The schedule layout shall be consistent with the Project Conditions and milestones set forth in the Contract documents. Work to complete each milestone shall be easily identifiable in the Contractor's overall schedule.

2. The layout shall be consistent with the Work required to meet the Contract milestone dates. In general, it is desired to have the Work needed to meet the Contract milestones be detailed activities that summarize, or roll-up to provide plan and status information reported for the milestone. The summarized overall schedule shall allow reporting of physical progress, cost, and manpower loading for the entire work. Owner intent will be to use the Contractor's schedule for milestones to summarize activities in Owner Master Schedule for all projects.

3. The Schedule layout shall be arranged to allow easy physical progress monitoring of physical areas. Essentially, each level and area within level or area and level within area or the like shall be broken down within the Schedule. These areas and levels shall summarize (or rollup) for reporting purposes. The Contractor shall establish the layout that is needed to meet his Contract responsibilities. The Contractor shall use his selected layout to coordinate with the Contractor's submitted progress payment applications, such that the Schedule, physical progress, the progress payment application and physical progress can be compared to determine the actual progress payments to be made to the Contractor.

4. The calendar is established including agreed working times and holidays. The calendar should not be altered during the project unless the Owner's Representative expressly agrees.

5. Only activity types such "Start Milestone," "Finish Milestone," and "Task" will be allowed with prior authorization by the Owner's Representative. Level of effort (LOE) activities may be used to summarize work as needed to produce summary level schedules for presentation purposes.

6. All activities should have both predecessor and successor logic ties that accurately represent the sequence and interdependence of all related activities except Project Start (which would not have any predecessors) and the last Contract Milestone (which would not have any successors).

7. Negative lags may not be used (there will be no exceptions to this requirement). FS – Finish-to-Start with zero (0) duration logic ties are preferable.

8. SF – Start-to-Finish logic ties are not acceptable.

F. Formats of Schedules Submitted to Owner's Representative

1. The formats of schedules (and schedule documents) shall be submitted to the Owner's Representative are described below. The formats described are solely for reporting information and analysis use with Owner and are not intended to direct the Contractor in his own methods of scheduling. The Contractor may use any schedule format needed for his own use in performing his responsibilities in the Contract.

2. All schedules (and schedule documents) shall be submitted with clear identification of Owner and Contractor's job numbers, schedule names, descriptions, plot dates, data dates, file numbers, issue numbers and the like.

3. All Baseline, Progress and Summary Schedules submitted shall be formatted in a fixed sequence of summary and detail activities for the Contract duration for ease of reference in progress updates. This sequence shall be established by the Contractor and acceptable to the Owner's Representative. The sequence shall

   be set up in the software such that re-sequencing or reorganizing of the Schedules is not required to generate Owner required schedules and reports. This allows a one to one comparison of each Schedule issued with previous Schedules for analysis purposes, including the As-built Schedule.

4. All Baseline, Progress, and Summary Schedules shall be submitted with the activity description data listed from left to right, as follows: Activity ID, Activity Description, Original Duration, Remaining Duration, Total Float, Percent Complete, Early Start, and Early Finish. The early start and finish dates shall display an “A” after the dates if started (and finished). The Baseline Schedule shall also have the late start and late finish dates to the right of the early finish dates. The Owner reserves the right, at no cost, to require the Contractor to add the late start and late Finish dates to the Progress and Summary Schedules at any time.

5. The status bars on all schedules shall display the physical percent complete of progress. This same physical percent complete shall also be used in the data field. The percent complete of activity duration to show progress shall not be used.

6. The Baseline and Progress Schedules shall be submitted as color plotted time-scaled logic diagrams, with sufficient calendar and spacing to allow activity description information, bars and logic to be easily read. For each submitted schedule, a color plotted time-scaled logic diagram of just critical path activities shall be submitted. The fixed format, as described above, shall be used for all time-scaled logic diagram submittals throughout the duration of the project.

7. The Baseline, Progress, and Summary Schedules shall be submitted in bar chart format with activity data on the left side and bars on the right side. Logic shall not be displayed. Activity descriptions shall be displayed in the bar area. These bar chart schedules shall be 11” x 17” in size, and readable.

8. The Progress Schedule shall be submitted in an additional bar chart format that displays the previous month’s Progress Schedule as a “Target” schedule for comparison use. The first Progress Schedule shall use the Baseline Schedule as the “Target” schedule. The “Target” bars shall be of smaller size, of different color, and below the current schedule’s bars. Two color copies shall be submitted. The size shall be 11” x 17”.

9. The Baseline and Progress Schedules shall be submitted in a bar chart format, as described above, but shall contain only the critical path activities. In the event that the Contractor’s schedule has more than 25 percent of the activities as critical path or near critical path, the Contractor shall submit an additional bar chart schedule containing both the critical path and near critical path (as previously defined) activities.

10. The Baseline and Progress Schedules shall be submitted with a tabular report that displays the activity data previously listed in this subsection, sorted by Activity Number. Owner reserves the right to request up to two additional tabular reports, in a format requested by the Owner’s Representative, with any schedule submittal, Time Impact Analysis, or Recovery Schedule, at no additional cost to Owner.

11. The Baseline and Progress Schedules shall be submitted with a predecessor and successor report in 8-1/2” x 11”, black and white format, displaying the activity data previously listed in this subsection and the predecessors and successors for each activity. This shall be in the fixed activity format.

12. All schedules and schedule documents submitted to the Owner's Representative shall be in hard copy, as described above, and in the submitted format via electronic transmission that contains the schedule data files.

1.08 WEATHER IMPACTS AND DELAY

A. The Contractor agrees that he shall not be entitled to a time extension due to normal inclement weather, which can be expected at the project locale due to precipitation, snow, temperature, or other weather conditions. Normal inclement weather shall be defined as the most recent five-year average of accumulated record mean values from climatological data compiled by the US Department of Commerce, National Oceanic and Atmospheric Administration (NOAA) monitoring station nearest to the project site. The Contractor shall include in its Baseline Schedule and all Progress Schedules, allowances for normal inclement weather. Agreed rain days will be tied to specific activity sequences in specific seasons.

B. The Contractor shall only be entitled to an extension of Contract time, if the Contractor can substantiate that the severity of the weather was in excess of the normal inclement weather, and such weather conditions actually delayed the critical path of the Work. Time extensions will not be allowed for weather delays to non-critical path portions of the Work. Approved time extensions for abnormal weather conditions shall be deemed excusable and non-compensable.

C. No extension of time will be made for abnormal inclement weather after the portions of the Work in progress at the time are enclosed, except for site work. Site work delays at that time will be allowed only if the abnormal weather causes a critical path delay to the Contract Time or milestone date related to that site work. For the purpose of this paragraph, the term enclosed is defined to mean when the Work in an area of a structure or building is sufficiently closed in (portions of exterior walls up and portions of roof in place), so as to permit adequate conditioning of the air to allow the various trades to perform the Work.

D. The Contractor is responsible for providing any temporary weather enclosures necessary for Work to proceed without weather delays.

1.09 SCHEDULE UPDATES AND SCHEDULE (NETWORK) REVISIONS

A. During the course of the Work and issuance of the Progress Schedules, updating to reflect actual progress shall not be considered revisions to the Schedule. Such updating shall include revisions to activity durations and certain sequences on a monthly basis. Included in the Progress Schedule updates shall be activities and changes that have already been reviewed and accepted by Owner such as the effect of accepted Owner changes, the agreed duration of delays caused by acts of God or other conditions or events which have affected the progress of the Work. The Progress Schedules, when formally submitted, shall display current progress, as well as displaying the forecast or projected Work to the end of the Project.

B. On all Progress Schedule submittals, the Contractor shall submit a printed list of all schedule logic changes along with the reason for each change. This list is an integral part of the Schedule submittal. This list shall be generated from the scheduling software and be the same logic included electronic transmission. Owner shall accept this list as part of its overall Progress Schedule submittal review and acceptance process.

C. Should the Contractor, after Owner acceptance of the Baseline Schedule and any Progress Schedules, desire to change the logic of its plan of construction, the Contractor shall submit in writing its requested revisions to the Owner's Representative. The request shall include a written narrative of the reasons for the activity and logic changes, a description of the logic for rescheduling the work, and the methods of maintaining adherence to critical and milestone dates. In addition, for changes affecting sequences of the Work, the Contractor shall provide a time-scaled logic diagram that compares the original sequence of work to the requested revised sequence of work. The Contractor shall submit the requested revision in a timely manner such that Owner may review the request submittal the same time frame and manner as required for other schedule submittals. Upon Owner acceptance of the request, the Contractor shall include the revision in the next upcoming Progress Schedule.

D. Neither the updating or revision of the Contractor's Progress Schedule, nor the submittal, updating, change or revision of any schedule (or schedule document) for the Owner's review and acceptance shall have the effect of amending or modifying, in any way, the Contract Time, any Contract completion date, or Contract milestone dates or of modifying or limiting in any way Contractor's obligations under this Contract.

1.10 TIME IMPACT ANALYSIS FOR CHANGED CONDITIONS

A. If delays are experienced that the Contractor believes are caused by Owner, the Contractor shall submit a formal written Time Impact Analysis (TIA). The TIA shall define the impact of each change or delay to the current accepted Progress Schedule. The TIA shall include a written narrative of the impact of such delays, and a schedule in time-scaled logic diagram format that depicts how the changed or delayed work affects other activities in the current accepted Progress Schedule.

B. In addition to the Contractor's presentation of the impact in the TIA, the Contractor shall include in the TIA, a mitigation plan that reduces or eliminates the claimed delay. The mitigation plan shall include specific Owner and Contractor actions as well as the cost to the Contractor to proceed with the mitigation.

C. In the event that the Contractor requests a Contract time extension, the time impacts to critical path activities in the current accepted Progress Schedule shall be clearly shown on a schedule in time-scaled logic diagram format. Extensions of time will be granted only to the extent that such changes or delays cause the time for the changed activity and related activities to exceed the total float along the affected path of activities at the time of Owner directive to proceed with the change or the actual commencement of the delay included in the TIA.

D. Schedule float is not for the exclusive use or benefit of either the Contractor or Owner. Neither Owner nor the Contractor "owns" the float. The project or Work "owns" the float. Liability for delay to Contract or milestone dates rests with the party whose action (or inaction) caused the delay beyond the float that was available at the time of the delaying action (or inaction).

E. Each formal TIA shall be submitted as an integral element of the Contractor's change order proposal.

F. A copy of Owner accepted TIA will be incorporated in the change order signed by Owner and the Contract Administrator for such change. Any changes to the Schedule will be incorporated into the next update of the Progress Schedule following the Owner's

acceptance of the TIA.

G. The Contractor shall be responsible for all costs associated with the preparation of the TIA and the incorporation of accepted TIA's, or portion of TIA's, in the Progress Schedule.

H. If agreement is not reached on a TIA, or a portion of a TIA, the Progress Schedule, including any time extensions, shall be revised only to the extent accepted by Owner. For any TIA, or portion of a TIA, that is not accepted by Owner, the Contractor may submit a claim in accordance with the Conditions of the Contract.

1.11 RECOVERY SCHEDULE

A. Should any conditions exist, such that certain activities shown on the Contractor's Progress Schedule fall behind schedule to the extent that any of the mandatory critical dates or milestone completion dates are at risk of being delayed, the Contractor shall be required, at no cost to Owner, to prepare and submit to the Owner's Representative a supplementary Recovery Schedule. The Recovery Schedule shall be in a form and detail appropriate to the need, to explain and display to the Owner's Representative how the Contractor intends to re-schedule those activities to regain compliance with the last previously accepted Progress Schedule.

B. After determination by the Owner's Representative of the requirement for a Recovery Schedule, the Contractor shall, within five (5) calendar days, submit to Owner's Representative, the Recovery Schedule. The Recovery Schedule shall represent the Contractor's best judgment as to how the Contractor's work shall be reorganized such that the work may return to the accepted Progress Schedule within the maximum one-month period. The Recovery Schedule shall be prepared at a similar level of detail as the Progress Schedule and shall be based on the accepted Progress Schedule.

C. The Owner's Representative will have seven (7) calendar days to review the Recovery Schedule submittal. Any revisions that result from the Owners Representative's review shall be resubmitted within three (3) workdays by the Contractor for acceptance by the Contract Administrator. The accepted Recovery Schedule shall then be the Schedule that the Contractor shall use in planning, organizing, directing, coordinating, performing and executing the Work (including all activities of subcontractors, equipment vendors and suppliers) that is included on the Recovery Schedule. All other Work shall proceed per the accepted Progress Schedule.

D. No later than five (5) calendar days prior to the expiration of the Recovery Schedule, the Owner's Representative and Contractor will meet to determine whether the Contractor has regained compliance with the accepted Progress Schedule. At the direction of the Owner's Representative, one of the following will occur:

1. If, in the opinion of the Owner's Representative, the Contractor is still behind schedule, the Contractor shall prepare another Recovery Schedule, at the Contractor's expense, to take effect for a maximum of one additional month from the start of the new Recovery Schedule.

2. If, in the opinion of the Owner's Representative, the Contractor has sufficiently regained compliance with the Progress Schedule, the use of the Progress Schedule shall be resumed.

1.12 TIMELINESS OF SCHEDULE DOCUMENT SUBMITTALS

A. The Schedule (and schedule documents) shall be submitted in a timely manner, as required by this Section. Failure to submit the Schedule and schedule documents on time and in an acceptable format shall result in withholding of payments and other remedies.

1.13 OWNER REVIEW OF SCHEDULE SUBMITTALS

A. All schedule documents shall be formally submitted and will be reviewed by Owner and returned to the Contractor with the required acceptance or action noted.

B. In providing review comments on schedule (and schedule document) submittals, and in this section, Contract Administrator may use the word “accepted”, “not accepted” or variations thereof in conveying its review comments to the Contractor. At any time, the “accepted” or similar wording is used, such wording shall have no different meaning than similar wording, such as “no exceptions taken.”

END OF SECTION

PART 1 GENERAL

1.01 SECTION INCLUDES

A. Submittals.

B. References and standards.

C. Testing and inspection agencies and services.

D. Control of installation.

E. Mock-ups.

F. Tolerances.

G. Manufacturers' field services.

H. Defect Assessment.

1.02 RELATED REQUIREMENTS

A. Section 00 6000 - General Conditions: Inspections and approvals required by public authorities.

B. Section 01 3000 - Administrative Requirements: Submittal procedures.

C. Section 01 6000 - Product Requirements: Requirements for material and product quality.

1.03 REFERENCE STANDARDS

A. ASTM C1021 - Standard Practice for Laboratories Engaged in Testing of Building Sealants; 2008 (Reapproved 2014).

B. ASTM C1077 - Standard Practice for Laboratories Testing Concrete and Concrete Aggregates for Use in Construction and Criteria for Laboratory Evaluation; 2014.

C. ASTM C1093 - Standard Practice for Accreditation of Testing Agencies for Masonry; 2013.

D. ASTM D3740 - Standard Practice for Minimum Requirements for Agencies Engaged in the Testing and/or Inspection of Soil and Rock as Used in Engineering Design and Construction; 2012a.

E. ASTM E329 - Standard Specification for Agencies Engaged in Construction Inspection, Testing, or Special Inspection; 2014a.

F. ASTM E543 - Standard Specification for Agencies Performing Nondestructive Testing; 2013.

G. OSSC - Oregon Structural Specialty Code, latest edition.

1.04 SUBMITTALS

A. See Section 01 3000 - Administrative Requirements, for submittal procedures.

B. Design Data: Submit for Consultant's knowledge as contract administrator for the limited purpose of assessing conformance with information given and the design concept expressed in the contract documents, or for Owner's information.

C. Test Reports: After each test/inspection, promptly submit two copies of report to Consultant and to Contractor.

1. Include:

a. Date issued.

b. Project title and number.

c. Name of inspector.

d. Date and time of sampling or inspection.

e. Identification of product and specifications section.

f. Location in the Project.

g. Type of test/inspection.

h. Date of test/inspection.

i. Results of test/inspection.

j. Conformance with Contract Documents.

k. When requested by Consultant, provide interpretation of results.

2. Test report submittals are for Consultant's knowledge as contract administrator for the limited purpose of assessing conformance with information given and the design concept expressed in the contract documents, or for Owner's information.

D. Certificates: When specified in individual specification sections, submit certification by the manufacturer and Contractor or installation/application subcontractor to Consultant, in quantities specified for Product Data.

1. Indicate material or product conforms to or exceeds specified requirements. Submit supporting reference data, affidavits, and certifications as appropriate.

2. Certificates may be recent or previous test results on material or product, but must be acceptable to Consultant.

E. Manufacturer's Instructions: When specified in individual specification sections, submit printed instructions for delivery, storage, assembly, installation, start-up, adjusting, and finishing, for the Owner's information. Indicate special procedures, perimeter conditions requiring special attention, and special environmental criteria required for application or installation.

F. Manufacturer's Field Reports: Submit reports for Consultant's benefit as contract administrator or for Owner.

1. Submit for information for the limited purpose of assessing conformance with information given and the design concept expressed in the contract documents.

G. Erection Drawings: Submit drawings for Consultant's benefit as contract administrator or for Owner.

1. Submit for information for the limited purpose of assessing conformance with information given and the design concept expressed in the contract documents.

2. Data indicating inappropriate or unacceptable Work may be subject to action by Consultant or Owner.

1.05 REFERENCES AND STANDARDS

A. For products and workmanship specified by reference to a document or documents not included in the Project Manual, also referred to as reference standards, comply with requirements of the standard, except when more rigid requirements are specified or are required by applicable codes.

B. Conform to reference standard of date of issue current on date of Contract Documents, except where a specific date is established by applicable code.

C. Obtain copies of standards where required by product specification sections.

D. Maintain copy at project site during submittals, planning, and progress of the specific work, until Substantial Completion.

E. Should specified reference standards conflict with Contract Documents, request clarification from Consultant before proceeding.

F. Neither the contractual relationships, duties, or responsibilities of the parties in Contract nor those of Consultant shall be altered from the Contract Documents by mention or inference otherwise in any reference document.

1.06 TESTING AND INSPECTION AGENCIES AND SERVICES

A. Owner will employ and pay for services of an independent testing agency to perform other specified testing.

B. Employment of agency in no way relieves Contractor of obligation to perform Work in accordance with requirements of Contract Documents.

PART 2 PRODUCTS - NOT USED

PART 3 EXECUTION

3.01 CONTROL OF INSTALLATION

A. Monitor quality control over suppliers, manufacturers, products, services, site conditions, and workmanship, to produce Work of specified quality.

B. Comply with manufacturers' instructions, including each step in sequence.

C. Should manufacturers' instructions conflict with Contract Documents, request clarification from Consultant before proceeding.

D. Comply with specified standards as minimum quality for the Work except where more stringent tolerances, codes, or specified requirements indicate higher standards or more precise workmanship.

E. Have Work performed by persons qualified to produce required and specified quality.

F. Verify that field measurements are as indicated on shop drawings or as instructed by the manufacturer.

G. Secure products in place with positive anchorage devices designed and sized to withstand stresses, vibration, physical distortion, and disfigurement.

3.02 MOCK-UPS

A. Before installing portions of the Work where mock-ups are required, construct mock-ups in location and size indicated for each form of construction and finish required to comply with the following requirements, using materials indicated for the completed Work. The purpose of mock-up is to demonstrate the proposed range of aesthetic effects and workmanship.

B. Accepted mock-ups establish the standard of quality the Consultant will use to judge the Work.

C. Integrated Exterior Mock-ups: construct integrated exterior mock-up as indicated on Drawings. Coordinate installation of exterior envelope materials and products as required in individual Specification Sections. Provide adequate supporting structure for mock-up materials as necessary.

D. Notify Consultant fifteen (15) working days in advance of dates and times when mockups will be constructed.

E. Provide supervisory personnel who will oversee mock-up construction. Provide workers that will be employed during the construction at Project.

F. Tests shall be performed under provisions identified in this section and identified in the respective product specification sections.

G. Assemble and erect specified items with specified attachment and anchorage devices, flashings, seals, and finishes.

H. Obtain Consultant's approval of mock-ups before starting work, fabrication, or construction.

I. Accepted mock-ups shall be a comparison standard for the remaining Work.

J. Where mock-up has been accepted by Consultant and is specified in product specification sections to be removed, protect mock-up throughout construction, remove mock-up and clear area when directed to do so by Consultant.

K. Where possible salvage and recycle the demolished mock-up materials.

3.03 TOLERANCES

A. Monitor fabrication and installation tolerance control of products to produce acceptable Work. Do not permit tolerances to accumulate.

B. Comply with manufacturers' tolerances. Should manufacturers' tolerances conflict with Contract Documents, request clarification from Consultant before proceeding.

C. Adjust products to appropriate dimensions; position before securing products in place.

3.04 TESTING AND INSPECTION

A. See individual specification sections and the current building code for testing and inspection required.

B. Testing Agency Duties:

1. Provide qualified personnel at site. Cooperate with Consultant and Contractor in performance of services.

2. Perform specified sampling and testing of products in accordance with specified standards.

3. Ascertain compliance of materials and mixes with requirements of Contract Documents.

4. Promptly notify Consultant and Contractor of observed irregularities or non-conformance of Work or products.

5. Perform additional tests and inspections required by Consultant.

6. Submit reports of all tests/inspections specified.

C. Limits on Testing/Inspection Agency Authority:

1. Agency may not release, revoke, alter, or enlarge on requirements of Contract Documents.

2. Agency may not approve or accept any portion of the Work.

3. Agency may not assume any duties of Contractor.

4. Agency has no authority to stop the Work.

D. Contractor Responsibilities:

1. Deliver to agency at designated location, adequate samples of materials proposed to be used that require testing, along with proposed mix designs.

2. Cooperate with laboratory personnel, and provide access to the Work and to manufacturers' facilities.

3. Provide incidental labor and facilities:

a. To provide access to Work to be tested/inspected.

b. To obtain and handle samples at the site or at source of Products to be tested/inspected.

c. To facilitate tests/inspections.

d. To provide storage and curing of test samples.

4. Notify Consultant and laboratory 24 hours prior to expected time for operations requiring testing/inspection services.

5. Employ services of an independent qualified testing laboratory and pay for additional samples, tests, and inspections required by Contractor beyond specified requirements.

6. Arrange with Owner's agency and pay for additional samples, tests, and inspections required by Contractor beyond specified requirements.

E. Re-testing required because of non-conformance to specified requirements shall be performed by the same agency on instructions by Consultant.

F. Re-testing required because of non-conformance to specified requirements shall be paid for by Contractor. Payment for re testing will be charged to the Contractor by deducting testing charges from the Contract Price.

3.05 MANUFACTURERS' FIELD SERVICES

A. When specified in individual specification sections, require material or product suppliers or manufacturers to provide qualified staff personnel to observe site conditions, conditions of surfaces and installation, quality of workmanship, start-up of equipment, test, adjust and balance of equipment as applicable, and to initiate instructions when necessary.

B. Submit qualifications of observer to Consultant 30 days in advance of required observations.

1. Observer subject to approval of Consultant.

2. Observer subject to approval of Owner.

C. Report observations and site decisions or instructions given to applicators or installers that are supplemental or contrary to manufacturers' written instructions.

3.06 DEFECT ASSESSMENT

A. Replace Work or portions of the Work not conforming to specified requirements.

END OF SECTION

PART 1 GENERAL

1.01 SECTION INCLUDES

A. Temporary telecommunications services.

B. Temporary sanitary facilities.

C. Temporary Controls: Barriers, enclosures, and fencing.

D. Security requirements.

E. Vehicular access and parking.

F. Waste removal facilities and services.

G. Project identification sign.

H. Field offices.

1.02 RELATED REQUIREMENTS

A. Section 01 5100 - Temporary Utilities.

1.03 REFERENCE STANDARDS

A. ASTM E84 - Standard Test Method for Surface Burning Characteristics of Building Materials; 2015a.

1.04 TELECOMMUNICATIONS SERVICES

A. Provide, maintain, and pay for telecommunications services to field office at time of project mobilization.

B. Telecommunications services shall include:

1. Windows-based personal computer dedicated to project telecommunications, with necessary software and laser printer.

2. Telephone Land Lines: One line, minimum; one handset per line.

   a. Cell phone service with voice mail for the project superintendent is an acceptable alternative to a fixed telephone device for this project.

3. Internet Connections: Minimum of one; DSL modem or faster.

4. Email: Account/address reserved for project use.

5. Facsimile Service: Minimum of one dedicated fax machine/printer, with dedicated phone line.

   a. This service may reside at the Contractor's office for this project if someone in the office can regularly check the device for messages.

C. Provide a digital camera at the site capable of taking pictures of job conditions and sending.jpg images via e-mail to Owner and Architect.

1.05 TEMPORARY SANITARY FACILITIES

A. Provide and maintain required facilities and enclosures. Provide at time of project mobilization.

B. Maintain daily in clean and sanitary condition.

1.06 BARRIERS

A. Provide barriers to protect workers on the site and the public against injury.

B. Provide barriers to prevent unauthorized entry to construction areas, to prevent access to areas that could be hazardous to workers or the public, to allow for owner's use of site and to protect existing facilities and adjacent properties from damage from construction operations and demolition.

C. Provide barricades and covered walkways required by governing authorities for public rights-of-way and for public access to existing building.

D. Provide protection for plants designated to remain. Replace damaged plants.

E. Protect non-owned vehicular traffic, stored materials, site, and structures from damage.

F. Traffic Controls: Provide as required to maintain safe working environment for Owner and Contractor personnel using the site.

1.07 TEMPORARY FIRE PROTECTION

A. Provide and maintain necessary facilities and equipment to safeguard Project against Fire Damage.

1.08 FENCING

A. Provide 6 foot high fence around construction site; equip with vehicular and pedestrian gates with locks.

1.09 EXTERIOR ENCLOSURES

A. Provide temporary insulated weather tight closure of exterior openings to accommodate acceptable working conditions and protection for Products, to allow for temporary heating and maintenance of required ambient temperatures identified in individual specification sections, and to prevent entry of unauthorized persons. Provide access doors with self-closing hardware and locks.

1.10 INTERIOR ENCLOSURES

A. Provide temporary partitions and ceilings as indicated to separate work areas from Owner-occupied areas, to prevent penetration of dust and moisture into Owner-occupied areas, and to prevent damage to existing materials and equipment.

B. Construction: Framing and reinforced polyethylene sheet materials with closed joints and sealed edges at intersections with existing surfaces:

1. Maximum flame spread rating of 75 in accordance with ASTM E84.

1.11 SECURITY

A. Provide security and facilities to protect Work, existing facilities, and Owner's operations from unauthorized entry, vandalism, or theft.

B. Coordinate with Owner's security program.

1.12 VEHICULAR ACCESS AND PARKING

A. Comply with regulations relating to use of streets and sidewalks, access to emergency facilities, and access for emergency vehicles.

B. Coordinate access and haul routes with governing authorities and Owner.

C. Provide and maintain access to fire hydrants, free of obstructions.

D. Provide means of removing mud from vehicle wheels before entering streets.

E. Designated existing on-site roads may be used for construction traffic.

F. Provide temporary parking areas to accommodate construction personnel. When site space is not adequate, provide additional off-site parking.

G. Existing parking areas may be used for construction parking.

H. Do not allow vehicle parking on existing pavement.

I. Use designated drop off and delivery areas for short term parking only.

J. Do not use Owner's Parking Lots for overnight vehicle storage.

K. Designate one parking space for Owner and Architect use.

L. Repair existing facilities damaged by use, to original condition.

M. Provide trained and equipped flag persons to regulate traffic when construction operations or traffic encroach on public traffic lanes.

1.13 MATERIAL STORAGE SPACE

A. Maintain within Project Limits in accordance with Architect's and Owner's instructions. Do not block exitways or overload structure.

1.14 WASTE REMOVAL

A. See Section 01 7419 - Construction Waste Management and Disposal, for additional requirements.

B. Encourage the separation of waste materials and sorting and disposal at a local recycling center.

C. Provide waste removal facilities and services as required to maintain the site in clean and orderly condition.

D. Provide containers with lids. Remove trash from site periodically.

E. If materials to be recycled or re-used on the project must be stored on-site, provide suitable non-combustible containers; locate containers holding flammable material outside the structure unless otherwise approved by the authorities having jurisdiction.

F. Open free-fall chutes are not permitted. Terminate closed chutes into appropriate containers with lids.

1.15 PROJECT IDENTIFICATION

A. A project sign is not required for this project.

B. No other signs are allowed without Owner permission except those required by law.

1.16 FIELD OFFICES

A. Office: Weathertight, with lighting, electrical outlets, heating, cooling equipment, and equipped with sturdy furniture and storage space for drawings and all project documents.

B. Provide space for Project meetings, with table and chairs to accommodate 8 persons.

C. Provide office within 15 days from Notice to Proceed, maintain, and remove prior to Substantial Completion or as agreed by Owner.

D. Contractor shall provide a field office, minimum 8’x20’ for Owners Rep: Weathertight, with lighting, electrical outlets, internet, heating, cooling equipment, and equipped with sturdy furniture and storage space for drawings and all project documents. Provide separate keyed lock.

1. Provide space for Project meetings, with table and chairs to accommodate 8 persons.

2. Provide office within 15 days from Notice to Proceed, maintain, and remove prior to Substantial Completion or as agreed by Owner.

3. Provide Utilities: power and internet.

1.17 VISITOR PERSONAL PROTECTION EQUIPMENT

A. Provide six sets of Personal Protection Equipment (PPE) for use by official visitors to the project site during construction. Visitor PPE shall include as a minimum, hard hat and protective eye goggles. Provide high visibility garments when moving vehicles are in use on the construction site. Store in Field Office and reserve for use by visitors to the project site.

B. Maintain in good condition through the course of the project and replace equipment that does not meet personal safety requirements.

1.18 REMOVAL OF UTILITIES, FACILITIES, AND CONTROLS

A. Remove temporary utilities, equipment, facilities, materials, prior to Date of Substantial Completion inspection.

B. Remove underground installations to a minimum depth of 2 feet. Grade site as indicated.

C. Clean and repair damage caused by installation or use of temporary work.

D. Restore existing facilities used during construction to original condition.

E. Restore new permanent facilities used during construction to specified condition.

PART 2 PRODUCTS - NOT USED

PART 3 EXECUTION - NOT USED

END OF SECTION

PART 1 GENERAL

1.01 SECTION INCLUDES

A. Temporary Utilities: Electricity, lighting, heat, ventilation, and water.

1.02 RELATED REQUIREMENTS

A. Section 01 5000 - Temporary Facilities and Controls:

1. Temporary telecommunications services for administrative purposes.

2. Temporary sanitary facilities required by law.

1.03 CONSERVATION

A. It is the Owner's practice to utilize natural resources responsibly. Exercise appropriate energy and water conservation measures at all times.

1.04 TEMPORARY ELECTRICITY

A. Cost of Labor, Material and Energy: By Contractor.

B. Provide power service required from utility source.

C. Provide power outlets for construction operations, with branch wiring and distribution boxes located at each floor. Provide flexible power cords as required.

D. Provide main service disconnect and over-current protection at convenient location and meter.

E. Permanent convenience receptacles may be utilized during construction.

F. Provide adequate distribution equipment, wiring, and outlets to provide single phase branch circuits for power and lighting.

1.05 TEMPORARY LIGHTING FOR CONSTRUCTION PURPOSES

A. Provide and maintain incandescent lighting for construction operations to achieve a minimum lighting level of 2 watt/sq ft.

B. Provide and maintain 1 watt/sq ft lighting to exterior staging and storage areas after dark for security purposes.

C. Provide and maintain 0.25 watt/sq ft H.I.D. lighting to interior work areas after dark for security purposes.

D. Provide branch wiring from power source to distribution boxes with lighting conductors, pigtails, and lamps as required.

E. Maintain lighting and provide routine repairs.

F. Permanent building lighting may be utilized during construction.

1.06 TEMPORARY HEATING

A. Cost of of Labor, Material and Energy: By Contractor.

B. Provide heating devices and heat as needed to maintain specified conditions for construction operations.

C. Maintain minimum ambient temperature of 50 degrees F in areas where construction is in progress, unless indicated otherwise in specifications.

1.07 TEMPORARY COOLING

A. Provide cooling devices and cooling as needed to maintain specified conditions for construction operations.

B. Maintain maximum ambient temperature of 80 degrees F in areas where construction is in progress, unless indicated otherwise in specifications.

1.08 TEMPORARY VENTILATION

A. Existing ventilation equipment may not be used.

1.09 TEMPORARY WATER SERVICE

A. Cost of Labor, Materials, and Water Used: By Contractor.

B. Provide and maintain suitable quality water service for construction operations at time of project mobilization.

C. Connect to existing water source.

1. Exercise measures to conserve water.

D. Extend branch piping with outlets located so water is available by hoses with threaded connections. Provide temporary pipe insulation to prevent freezing.

PART 2 PRODUCTS - NOT USED

PART 3 EXECUTION - NOT USED

END OF SECTION

PART 1 GENERAL

1.01 SECTION INCLUDES

A. Prevention of erosion due to construction activities.

B. Prevention of sedimentation of waterways, open drainage ways, and storm and sanitary sewers due to construction activities.

C. Restoration of areas eroded due to insufficient preventive measures.

D. Compensation of Owner for fines levied by authorities having jurisdiction due to non-compliance by Contractor.

1.02 REFERENCE STANDARDS

A. ASTM D4355 - Standard Test Method for Deterioration of Geotextiles by Exposure to Light, Moisture, and Heat in a Xenon Arc Type Apparatus; 2007.

B. ASTM D4491 - Standard Test Methods for Water Permeability of Geotextiles by Permittivity; 1999a (Reapproved 2014).

C. ASTM D4533 - Standard Test Method for Trapezoid Tearing Strength of Geotextiles; 2011.

D. ASTM D4632/D4632M - Standard Test Method for Grab Breaking Load and Elongation of Geotextiles; 2015a.

E. ASTM D4751 - Standard Test Method for Determining Apparent Opening Size of a Geotextile; 2012.

F. ASTM D4873 - Standard Guide for Identification, Storage, and Handling of Geosynthetic Rolls and Samples; 2002 (Reapproved 2009).

1.03 PERFORMANCE REQUIREMENTS

A. Comply with all requirements of state and local jurisdictions for erosion and sedimentation control.

B. Develop and follow an Erosion and Sedimentation Prevention Plan and submit periodic inspection reports.

C. Do not begin clearing, grading, or other work involving disturbance of ground surface cover until applicable permits have been obtained; furnish all documentation required to obtain applicable permits.

1. An erosion control permit is required. The Owner shall apply, pay for, and secure the permit. The contractor shall comply with the construction erosion control permit.

2. Owner will withhold payment to Contractor equivalent to all fines resulting from non-compliance with applicable regulations.

D. Timing: Put preventive measures in place as soon as possible after disturbance of surface cover and before precipitation occurs.

E. Storm Water Runoff: Control increased storm water runoff due to disturbance of surface cover due to construction activities for this project.

1. Prevent runoff into storm and sanitary sewer systems, including open drainage channels, in excess of actual capacity or amount allowed by authorities having jurisdiction, whichever is less.

2. Anticipate runoff volume due to the most extreme short term and 24-hour rainfall events that might occur in 25 years.

F. Erosion On Site: Minimize wind, water, and vehicular erosion of soil on project site due to construction activities for this project.

1. Control movement of sediment and soil from temporary stockpiles of soil.

2. Prevent development of ruts due to equipment and vehicular traffic.

3. If erosion occurs due to non-compliance with these requirements, restore eroded areas at no cost to Owner.

G. Erosion Off Site: Prevent erosion of soil and deposition of sediment on other properties caused by water leaving the project site due to construction activities for this project.

1. Prevent windblown soil from leaving the project site.

2. Prevent tracking of mud onto public roads outside site.

3. Prevent mud and sediment from flowing onto sidewalks and pavements.

4. If erosion occurs due to non-compliance with these requirements, restore eroded areas at no cost to Owner.

H. Sedimentation of Waterways On Site: Prevent sedimentation of waterways on the project site, including rivers, streams, lakes, ponds, open drainage ways, storm sewers, and sanitary sewers.

1. If sedimentation occurs, install or correct preventive measures immediately at no cost to Owner; remove deposited sediments; comply with requirements of authorities having jurisdiction.

2. If sediment basins are used as temporary preventive measures, pump dry and remove deposited sediment after each storm.

I. Sedimentation of Waterways Off Site: Prevent sedimentation of waterways off the project site, including rivers, streams, lakes, ponds, open drainage ways, storm sewers, and sanitary sewers.

1. If sedimentation occurs, install or correct preventive measures immediately at no cost to Owner; remove deposited sediments; comply with requirements of authorities having jurisdiction.

J. Open Water: Prevent standing water that could become stagnant.

K. Maintenance: Maintain temporary preventive measures until permanent measures have been established.

1.04 WORK INCLUDED BUT SPECIFIED ELSEWHERE

A. Erosion control products and construction work within any jurisdictional right-of-way shall conform to the requirments of that jurisdiction, in addition to the requirements herein and those shown on the private improvement drawings.

B. Erosion control products and construction work within the any jurisdictional right-of-way shall conform to the requirments of that jurisdiction, 1990 Standard Specifications for Public Works Construction published by the Oregon Chapter of APWA (Amended in 1996) and to the requirements herein and those shown on the private improvement drawings.

1.05 SUBMITTALS

A. See Section 01 3000 - Administrative Requirements, for submittal procedures.

B. Erosion and Sedimentation Control Plan:

1. Submit within 2 weeks after Notice to Proceed.

2. Include:

a. Site plan identifying soils and vegetation, existing erosion problems, and areas vulnerable to erosion due to topography, soils, vegetation, or drainage.

b. Site plan showing grading; new improvements; temporary roads, traffic accesses, and other temporary construction; and proposed preventive measures.

c. Where extensive areas of soil will be disturbed, include storm water flow and volume calculations, soil loss predictions, and proposed preventive measures.

d. Schedule of temporary preventive measures, in relation to ground disturbing activities.

e. Other information required by law.

f. Format required by law is acceptable, provided any additional information specified is also included.

3. Obtain the approval of the Plan by authorities having jurisdiction.

4. Obtain the approval of the Plan by Owner.

C. Certificate: Mill certificate for silt fence fabric attesting that fabric and factory seams comply with specified requirements, signed by legally authorized official of manufacturer; indicate actual minimum average roll values; identify fabric by roll identification numbers.

D. Inspection Reports: Submit report of each inspection; identify each preventive measure, indicate condition, and specify maintenance or repair required and accomplished.

PART 2 PRODUCTS

2.01 MATERIALS

A. Mulch: Use one of the following:

1. Straw or hay.
2. Wood waste, chips, or bark.
3. Erosion control matting or netting.
4. Polyethylene film, where specifically indicated only.

B. Grass Seed For Temporary Cover: Select a species appropriate to climate, planting season, and intended purpose. If same area will later be planted with permanent vegetation, do not use species known to be excessively competitive or prone to volunteer in subsequent seasons.

C. Bales: Air dry, rectangular straw bales.

1. Cross Section: 14 by 18 inches, minimum.
2. Bindings: Wire or string, around long dimension.

D. Bale Stakes: One of the following, minimum 3 feet long:

1. Steel U- or T-section, with minimum mass of 1.33 lb per linear foot.
2. Wood, 2 by 2 inches in cross section.

E. Silt Fence Fabric: Polypropylene geotextile resistant to common soil chemicals, mildew, and insects; non-biodegradable; in longest lengths possible; fabric including seams with the following minimum average roll lengths:

1. Average Opening Size: 30 U.S. Std. Sieve, maximum, when tested in accordance with ASTM D4751.
2. Permittivity: 0.05 sec^-1, minimum, when tested in accordance with ASTM D4491.
3. Ultraviolet Resistance: Retaining at least 70 percent of tensile strength, when tested in accordance with ASTM D4355 after 500 hours exposure.
4. Tensile Strength: 100 lb-f, minimum, in cross-machine direction; 124 lb-f, minimum, in machine direction; when tested in accordance with ASTM D4632/D4632M.

5. Elongation: 15 to 30 percent, when tested in accordance with ASTM D4632/D4632M.

6. Tear Strength: 55 lb-f, minimum, when tested in accordance with ASTM D4533.

7. Color: Manufacturer's standard, with embedment and fastener lines preprinted.

F. Silt Fence Posts: One of the following, minimum 5 feet long:

1. Softwood, 4 by 4 inches in cross section.

G. Gravel: See Section 32 1123 for aggregate.

PART 3 EXECUTION

3.01 EXAMINATION

A. Examine site and identify existing features that contribute to erosion resistance; maintain such existing features to greatest extent possible.

3.02 PREPARATION

A. Schedule work so that soil surfaces are left exposed for the minimum amount of time.

3.03 SCOPE OF PREVENTIVE MEASURES

A. In all cases, if permanent erosion resistant measures have been installed temporary preventive measures are not required.

B. Construction Entrances: Traffic-bearing aggregate surface.

1. Width: As required; 20 feet, minimum.

2. Length: 50 feet, minimum.

3. Provide at each construction entrance from public right-of-way and where noted on drawings.

4. Where necessary to prevent tracking of mud onto right-of-way, provide wheel washing area out of direct traffic lane, with drain into sediment trap or basin.

C. Linear Sediment Barriers: Made of silt fences.

1. Provide linear sediment barriers:

a. Along downhill perimeter edge of disturbed areas, including soil stockpiles.

2. Space sediment barriers with the following maximum slope length upslope from barrier:

a. Slope of Less Than 2 Percent: 100 feet..

b. Slope Between 2 and 5 Percent: 75 feet.

c. Slope Between 5 and 10 Percent: 50 feet.

d. Slope Between 10 and 20 Percent: 25 feet.

e. Slope Over 20 Percent: 15 feet.

D. Storm Drain Curb Inlet Sediment Trap: Protect each curb inlet using one of the following measures:

1. Filter fabric wrapped around hollow concrete blocks blocking entire inlet face area; use one piece of fabric wrapped at least 1-1/2 times around concrete blocks and secured to prevent dislodging; orient cores of blocks so runoff passes into inlet.

2. Straw bale row blocking entire inlet face area; anchor into pavement.

E. Storm Drain Drop Inlet Sediment Traps: As detailed on drawings.

F. Temporary Splash Pads: Stone aggregate over filter fabric; size to suit application; provide at downspout outlets and storm water outlets.

G. Soil Stockpiles: Protect using one of the following measures:

1. Cover with polyethylene film, secured by placing soil on outer edges.

2. Cover with mulch at least 4 inches thickness of pine needles, sawdust, bark, wood chips, or shredded leaves, or 6 inches of straw or hay.

H. Mulching: Use only for areas that may be subjected to erosion for less than 6 months.

1. Wood Waste: Use only on slopes 3:1 or flatter; no anchoring required.

I. Temporary Seeding: Use where temporary vegetated cover is required.

3.04 INSTALLATION

A. Traffic-Bearing Aggregate Surface:

1. Excavate minimum of 6 inches.

2. Place geotextile fabric full width and length, with minimum 12 inch overlap at joints.

3. Place and compact at least 6 inches of 1.5 to 3.5 inch diameter stone.

B. Silt Fences:

1. Store and handle fabric in accordance with ASTM D4873.

2. Where slope gradient is less than 3:1 or barriers will be in place less than 6 months, use nominal 16 inch high barriers with minimum 36 inch long posts spaced at 6 feet maximum, with fabric embedded at least 4 inches in ground.

3. Where slope gradient is steeper than 3:1 or barriers will be in place over 6 months, use nominal 28 inch high barriers, minimum 48 inch long posts spaced at 6 feet maximum, with fabric embedded at least 6 inches in ground.

4. Where slope gradient is steeper than 3:1 and vertical height of slope between barriers is more than 20 feet, use nominal 32 inch high barriers with woven wire

reinforcement and steel posts spaced at 4 feet maximum, with fabric embedded at least 6 inches in ground.

5. Install with top of fabric at nominal height and embedment as specified.

6. Do not splice fabric width; minimize splices in fabric length; splice at post only, overlapping at least 18 inches, with extra post.

7. Fasten fabric to wood posts using one of the following:

   a. Four nails per post with 3/4 inch diameter flat or button head, 1 inch long, and 14 gage, 0.083 inch shank diameter.

   b. Five staples per post with at least 17 gage, 0.0453 inch wire, 3/4 inch crown width and 1/2 inch long legs.

8. Wherever runoff will flow around end of barrier or over the top, provide temporary splash pad or other outlet protection; at such outlets in the run of the barrier, make barrier not more than 12 inches high with post spacing not more than 4 feet.

C. Straw Bale Rows:

1. Install bales in continuous rows with ends butting tightly, with one bale at each end of row turned uphill.

2. Install bales so that bindings are not in contact with the ground.

3. Embed bales at least 4 inches in the ground.

4. Anchor bales with at least two stakes per bale, driven at least 18 inches into the ground; drive first stake in each bale toward the previously placed bale to force bales together.

5. Fill gaps between ends of bales with loose straw wedged tightly.

6. Place soil excavated for trench against bales on the upslope side of the row, compacted.

D. Mulching Over Large Areas:

1. Dry Straw and Hay: Apply 2-1/2 tons per acre; anchor using dull disc harrow or emulsified asphalt applied using same spraying machine at 100 gallons of water per ton of mulch.

2. Wood Waste: Apply 6 to 9 tons per acre.

3. Erosion Control Matting: Comply with manufacturer's instructions.

E. Mulching Over Small and Medium Areas:

1. Dry Straw and Hay: Apply 4 to 6 inches depth.

2. Wood Waste: Apply 2 to 3inches depth.

3. Erosion Control Matting: Comply with manufacturer's instructions.

F. Temporary Seeding:

1. When hydraulic seeder is used, seedbed preparation is not required.

2. When surface soil has been sealed by rainfall or consists of smooth undisturbed cut slopes, and conventional or manual seeding is to be used, prepare seedbed by scarifying sufficiently to allow seed to lodge and germinate.

3. If temporary mulching was used on planting area but not removed, apply nitrogen fertilizer at 1 pound per 1000 sq ft.

4. On soils of very low fertility, apply 10-10-10 fertilizer at rate of 12 to 16 pounds per 1000 sq ft.

5. Incorporate fertilizer into soil before seeding.

6. Apply seed uniformly; if using drill or cultipacker seeders place seed 1/2 to 1 inch deep.

7. Irrigate as required to thoroughly wet soil to depth that will ensure germination, without causing runoff or erosion.

8. Repeat irrigation as required until grass is established.

3.05 MAINTENANCE

A. Inspect preventive measures weekly, within 24 hours after the end of any storm that produces 0.5 inches or more rainfall at the project site, and daily during prolonged rainfall.

B. Repair deficiencies immediately.

C. Silt Fences:

1. Promptly replace fabric that deteriorates unless need for fence has passed.

2. Remove silt deposits that exceed one-third of the height of the fence.

3. Repair fences that are undercut by runoff or otherwise damaged, whether by runoff or other causes.

D. Straw Bale Rows:

1. Promptly replace bales that fall apart or otherwise deteriorate unless need has passed.

2. Remove silt deposits that exceed one-half of the height of the bales.

3. Repair bale rows that are undercut by runoff or otherwise damaged, whether by runoff or other causes.

E. Clean out temporary sediment control structures weekly and relocate soil on site.

F. Place sediment in appropriate locations on site; do not remove from site.

3.06 CLEAN UP

A. Remove temporary measures after permanent measures have been installed, unless permitted to remain by Architect.

B. Clean out temporary sediment control structures that are to remain as permanent measures.

C. Where removal of temporary measures would leave exposed soil, shape surface to an acceptable grade and finish to match adjacent ground surfaces.

END OF SECTION

PART 1 GENERAL

1.01 SECTION INCLUDES

A. Construction procedures to promote adequate indoor air quality after construction.

B. Building flush-out after construction and before occupancy.

C. Testing indoor air quality after completion of construction.

1.02 PROJECT GOALS

A. Dust and Airborne Particulates: Prevent deposition of dust and other particulates in HVAC ducts and equipment.

1. Cleaning of ductwork is not contemplated under this Contract.

2. Contractor shall bear the cost of cleaning required due to failure to protect ducts and equipment from construction dust.

B. Airborne Contaminants: Procedures and products have been specified to minimize indoor air pollutants.

1. Furnish products meeting the specifications.

2. Avoid construction practices that could result in contamination of installed products leading to indoor air pollution.

1.03 RELATED REQUIREMENTS

A. Section 01 4000 - Quality Requirements: Testing and inspection services.

B. Section 01 6116 - Volatile Organic Compound (VOC) Content Restrictions.

1.04 REFERENCE STANDARDS

A. ASTM D5197 - Standard Test Method for Determination of Formaldehyde and Other Carbonyl Compounds in Air (Active Sampler Methodology); 2009.

B. CAL (CDPH SM) - Standard Method for the Testing and Evaluation of Volatile Organic Chemical Emissions From Indoor Sources Using Environmental Chambers; California Department of Public Health; v1.1, 2010.

C. EPA 600/4-90/010 - Compendium of Methods for the Determination of Air Pollutants in Indoor Air; April 1990.

D. EPA 625/R-96/010b - Compendium of Methods for the Determination of Toxic Organic Compounds in Ambient Air; January 1999.

E. SMACNA (OCC) - IAQ Guidelines for Occupied Buildings Under Construction; 2007.

1.05 DEFINITIONS

A. Adsorptive Materials: Gypsum board, acoustical ceiling tile and panels, carpet and carpet tile, fabrics, fibrous insulation, and other similar products.

B. Contaminants: Gases, vapors, regulated pollutants, airborne mold and mildew, and the like, as specified.

C. Particulates: Dust, dirt, and other airborne solid matter.

D. Wet Work: Concrete, plaster, coatings, and other products that emit water vapor or volatile organic compounds during installation, drying, or curing.

1.06 SUBMITTALS

A. See Section 01 3000 - Administrative Requirements, for submittal procedures.

B. Indoor Air Quality Management Plan: Describe in detail measures to be taken to promote adequate indoor air quality upon completion; use SMACNA (OCC) as a guide.

1. Submit not less than 60 days before enclosure of building.
2. Identify potential sources of odor and dust.
3. Identify construction activities likely to produce odor or dust.
4. Identify areas of project potentially affected, especially occupied areas.
5. Evaluate potential problems by severity and describe methods of control.
6. Describe construction ventilation to be provided, including type and duration of ventilation, use of permanent HVAC systems, types of filters and schedule for replacement of filters.
7. Describe cleaning and dust control procedures.

C. Air Contaminant Test Plan: Identify:

1. Testing agency qualifications.
2. Locations and scheduling of air sampling.
3. Test procedures, in detail.
4. Test instruments and apparatus.
5. Sampling methods.

D. Air Contaminant Test Reports: Show:

1. Location where each sample was taken, and time.
2. Test values for each air sample; average the values of each set of 3.
3. HVAC operating conditions.
4. Certification of test equipment calibration.
5. Other conditions or discrepancies that might have influenced results.

PART 2 PRODUCTS

2.01 MATERIALS

A. Low VOC Materials: See Section 01 6116.

B. Low VOC Materials: See individual sections for specific requirements for materials with low VOC content.

PART 3 EXECUTION

3.01 CONSTRUCTION PROCEDURES

A. Prevent the absorption of moisture and humidity by adsorptive materials by:

1. Sequencing the delivery of such materials so that they are not present in the building until wet work is completed and dry.

2. Delivery and storage of such materials in fully sealed moisture-impermeable packaging.

3. Provide sufficient ventilation for drying within reasonable time frame.

B. Begin construction ventilation when building is substantially enclosed.

C. If extremely dusty or dirty work must be conducted inside the building, shut down HVAC systems for the duration; remove dust and dirt completely before restarting systems.

D. HVAC equipment and ductwork may NOT be used for ventilation during construction:

1. Provide temporary ventilation equivalent to 1.5 air changes per hour, minimum.

2. Exhaust directly to outside.

3. Seal HVAC air inlets and outlets immediately after duct installation.

E. Do not store construction materials or waste in mechanical or electrical rooms.

F. Prior to use of return air ductwork without intake filters clean up and remove dust and debris generated by construction activities.

1. Inspect duct intakes, return air grilles, and terminal units for dust.

2. Clean plenum spaces, including top sides of lay-in ceilings, outsides of ducts, tops of pipes and conduit.

3. Clean tops of doors and frames.

4. Clean mechanical and electrical rooms, including tops of pipes, ducts, and conduit, equipment, and supports.

5. Clean return plenums of air handling units.

6. Remove intake filters last, after cleaning is complete.

G. Do not perform dusty or dirty work after starting use of return air ducts without intake filters.

H. Use other relevant recommendations of SMACNA (OCC) for avoiding unnecessary contamination due to construction procedures.

3.02 BUILDING FLUSH-OUT

A. Contractor's Option: Either full continuous flush-out OR satisfactory air contaminant testing is required, not both.

B. Perform building flush-out before occupancy.

C. Do not start flush-out until:

1. All construction is complete.

2. HVAC systems have been tested, adjusted, and balanced for proper operation.

3. Inspection of inside of return air ducts and terminal units confirms that cleaning is not necessary.

4. New HVAC filtration media have been installed.

D. Building Flush-Out: Operate all ventilation systems at normal flow rates with 100 percent outside air until a total air volume of 14,000 cubic feet per square foot of floor area has been supplied.

1. Obtain Owner's concurrence that construction is complete enough before beginning flush-out.

2. Maintain interior temperature of at least 60 degrees F and interior relative humidity no higher than 60 percent.

3. If additional construction involving materials that produce particulates or any of the specified contaminants is conducted during flush-out, start flush-out over.

4. If interior spaces must be occupied prior to completion of the flush-out, supply a minimum of 25 percent of the total air volume prior to occupancy, and:

a. Begin ventilation at least three hours prior to daily occupancy.

b. Continue ventilation during all occupied periods.

c. Provide minimum outside air volume of 0.30 cfm per square foot or design minimum outside air rate, whichever is greater.

E. Install new HVAC filtration media after completion of flush-out and before occupancy or further testing.

3.03 AIR CONTAMINANT TESTING

A. Contractor's Option: Either full continuous flush-out OR satisfactory air contaminant testing is required, not both.

B. Perform air contaminant testing before occupancy.

C. Do not start air contaminant testing until:

1. All construction is complete, including interior finishes.

2. HVAC systems have been tested, adjusted, and balanced for proper operation.

3. New HVAC filtration media have been installed.

D. Indoor Air Samples: Collect from spaces representative of occupied areas:

1. Collect samples while operable windows and exterior doors are closed, HVAC system is running normally as if occupied, with design minimum outdoor air, but with the building unoccupied.

2. Collect samples from spaces in each contiguous floor area in each air handler zone, but not less than one sample per 25,000 square feet; take samples from areas having the least ventilation and those having the greatest presumed source strength.

3. Collect samples from height from 36 inches to 72 inches above floor.

4. Collect samples from same locations on 3 consecutive days during normal business hours; average the results of each set of 3 samples.

5. Exception: Areas with normal very high outside air ventilation rates, such as laboratories, do not need to be tested.

6. When retesting the same building areas, take samples from at least the same locations as in first test.

E. Outdoor Air Samples: Collect samples at outside air intake of each air handler at the same time as indoor samples are taken.

F. Analyze air samples and submit report.

G. Air Contaminant Concentration Limits:

1. Formaldehyde: Not more than 27 parts per billion.

2. PM10 Particulates: Not more than 50 micrograms per cubic meter.

3. Total Volatile Organic Compounds (TVOCs): Not more than 500 micrograms per cubic meter.

4. Chemicals Listed in CAL (CDPH SM) Table 4-1, except Formaldehyde: Allowable concentrations listed in Table 4-1.

5. Carbon Monoxide: Not more than 9 parts per million and not more than 2 parts per million higher than outdoor air.

H. Air Contaminant Concentration Test Methods:

1. Formaldehyde: ASTM D5197, EPA 625 Method TO-11A, or EPA 600 Method IP-6.

2. Particulates: EPA 600 Method IP-10.

3. Total Volatile Organic Compounds (TVOC): EPA 625 Method TO-1, TO-15, or TO-17; or EPA 600 Method IP-1.

4. Chemicals Listed in CAL (CDPH SM) Table 4-1, except Formaldehyde: ASTM D5197, or EPA 625 Method TO-1, TO-15, or TO-17.

5. Carbon Monoxide: EPA 600 Method IP-3, plus measure outdoor air; measure in ppm; report both indoor and outdoor measurements.

I. Air Contaminant Concentration Determination and Limits:

1. Carbon Monoxide: Not more than 9 parts per million and not more than 2 parts per million higher than outdoor air.

2. Airborne Mold and Mildew: Measure in relation to outside air; not higher than outside air.

3. Formaldehyde: Not more than 50 parts per billion.

4. Formaldehyde: Measure in micrograms per cubic meter, in relation to outside air; not more than 20 micrograms per cubic meter higher than outside air.

5. Total Volatile Organic Compounds (TVOC): Not more than 500 micrograms per cubic meter.

6. Total Volatile Organic Compounds (TVOC): Measure in micrograms per cubic meter, in relation to outside air; not more than 200 micrograms per cubic meter higher than outside air.

7. Particulates (PM10): Not more than 50 micrograms per cubic meter.

8. Total Particulates (PM): Measure in micrograms per cubic meter, in relation to outside air; not more than 20 micrograms per cubic meter higher than outside air.

END OF SECTION

PART 1 GENERAL

1.01 SECTION INCLUDES

A. General product requirements.

B. Re-use of existing products.

C. Transportation, handling, storage and protection.

D. Product option requirements.

E. Substitution limitations and procedures.

F. Procedures for Owner-supplied products.

G. Maintenance materials, including extra materials, spare parts, tools, and software.

1.02 RELATED REQUIREMENTS

A. Document 00 2113 - Instructions to Bidders: Product options and substitution procedures prior to bid date.

B. Section 01 4000 - Quality Requirements: Product quality monitoring.

C. Section 01 6023 - Substitution Request Form

D. Section 01 6116 - Volatile Organic Compound (VOC) Content Restrictions: Requirements for VOC-restricted product categories.

E. Section 01 7419 - Construction Waste Management and Disposal: Waste disposal requirements potentially affecting packaging and substitutions.

1.03 REFERENCE STANDARDS

A. GEI (SCH) - GREENGUARD "Children and Schools" Certified Products; GREENGUARD Environmental Institute; current listings at www.greenguard.org.

B. GreenSeal GS-36 - Commercial Adhesives; Green Seal, Inc.; 2000.

C. SCAQMD 1168 - South Coast Air Quality Management District Rule No.1168; current edition; www.aqmd.gov

1.04 SUBMITTALS

A. Proposed Products List: Submit list of major products that comply with the specifications and are proposed for use, with name of manufacturer, trade name, and model number of each product.

1. Submit within 15 days after date of Subcontract Award Notice.

2. For products specified only by reference standards, list applicable reference standards.

B. Product Data Submittals: Submit manufacturer's standard published data. Mark each copy to identify applicable products, models, options, and other data. Supplement manufacturers' standard data to provide information specific to this Project.

C. Shop Drawing Submittals: Prepared specifically for this Project; indicate utility and electrical characteristics, utility connection requirements, and location of utility outlets for service for functional equipment and appliances.

D. Sample Submittals: Illustrate functional and aesthetic characteristics of the product, with integral parts and attachment devices. Coordinate sample submittals for interfacing work.

1. For selection from standard finishes, submit samples of the full range of the manufacturer's standard colors, textures, and patterns.

PART 2 PRODUCTS

2.01 EXISTING PRODUCTS

A. Do not use materials and equipment removed from existing premises unless specifically required or permitted by the Contract Documents.

B. Unforeseen historic items encountered remain the property of the Owner; notify Owner promptly upon discovery; protect, remove, handle, and store as directed by Owner.

C. Existing materials and equipment indicated to be removed, but not to be re-used, relocated, reinstalled, delivered to the Owner, or otherwise indicated as to remain the property of the Owner, become the property of the Contractor; remove from site.

D. Reused Products: Reused products include materials and equipment previously used in this or other construction, salvaged and refurbished as specified.

2.02 NEW PRODUCTS

A. Provide new products unless specifically required or permitted by the Contract Documents.

2.03 PRODUCT OPTIONS

A. Products Specified by Reference Standards or by Description Only: Use any product meeting those standards or description.

B. Products Specified by Naming One or More Manufacturers: Use a product of one of the manufacturers named and meeting specifications, no options or substitutions allowed.

C. Products Specified by Naming One or More Manufacturers with a Provision for Substitutions: Submit a request for substitution for any manufacturer not named.

2.04 MAINTENANCE MATERIALS

A. Furnish extra materials, spare parts, tools, and software of types and in quantities specified in individual specification sections.

PART 3 EXECUTION

3.01 SUBSTITUTION PROCEDURES

A. Instructions to Bidders specifies process and time restrictions for submitting requests for substitutions during the bidding period. Comply with requirements specified in that section.

B. Substitutions may be considered when a product becomes unavailable through no fault of the Contractor.

C. Document each request on Form 01-6023 with complete data substantiating compliance of proposed substitution with Contract Documents. **Include a point by point comparative analysis in matrix form.**

D. Substitutions

1. Notify Architect when Contractor is aware of materials, equipment, or products that meet the aesthetic and programmatic intent of Contract Documents, but which are more environmentally responsible than materials, equipment, or products specified or indicated in the Contract Documents.

E. A request for substitution constitutes a representation that the submitter:

1. Has investigated proposed product and determined that it meets or exceeds the quality level of the specified product.

2. Agrees to provide the same warranty for the substitution as for the specified product.

3. Agrees to coordinate installation and make changes to other Work that may be required for the Work to be complete with no additional cost to Owner.

4. Waives claims for additional costs or time extension that may subsequently become apparent.

F. Substitutions will not be allowed post bid.

G. Each request for substitution approval shall include:

1. Identity of Product for which substitution is requested; include Specification Section.

2. Identity of substitution; include complete Product description, drawings, photographs, performance and test data, and any other information necessary for evaluation.

3. ~~Identify compliance with any described LEED product requirements~~.

4. Quality comparison of proposed substitution with specified product.

5. Changes in other Work required because of substitution.

6. Effect on construction progress schedule.

7. Cost of proposed substitution compared with specified product.

8. Any required license fees or royalties.

9. Availability of maintenance service.

10. Source of replacement materials.

H. Architect will be sole judge of acceptability of any proposed substitution.

3.02 SUBSTITUTIONS AFTER CONTRACT AWARD

A. Approval will be granted only when:

1. Specified Product cannot be delivered without Project delay, or

2. Specified Product has been discontinued, or

3. Specified Product has been replaced by superior Product, or

4. Specified Product cannot be guaranteed as specified, or

5. Specified Product will not perform properly, or

6. Specified Product will not fit within designated space, or

7. Specified Product does not comply with governing codes, or

8. Substitution will be clearly in Owner's interest.

B. Architect will issue Change Order authorizing approved substitutions and revising Contract Sum where appropriate.

3.03 CONTRACT COMPLIANCE

A. Substitution approval does not relieve Contractor from responsibility for proper execution of the Work and for compliance with other Contract requirements.

3.04 OWNER-SUPPLIED PRODUCTS

A. See Section 01 1000 for identification of Owner-supplied products.

B. Owner's Responsibilities:

1. Arrange for and deliver Owner reviewed shop drawings, product data, and samples, to Contractor.

2. Arrange and pay for product delivery to site.

3. On delivery, inspect products jointly with Contractor.

4. Submit claims for transportation damage and replace damaged, defective, or deficient items.

5. Arrange for manufacturers' warranties, inspections, and service.

C. Contractor's Responsibilities:

1. Review Owner reviewed shop drawings, product data, and samples.

2. Receive and unload products at site; inspect for completeness or damage jointly with Owner.

3. Handle, store, install and finish products.

4. Repair or replace items damaged after receipt.

3.05 TRANSPORTATION AND HANDLING

A. Package products for shipment in manner to prevent damage; for equipment, package to avoid loss of factory calibration.

B. If special precautions are required, attach instructions prominently and legibly on outside of packaging.

C. Coordinate schedule of product delivery to designated prepared areas in order to minimize site storage time and potential damage to stored materials.

D. Transport and handle products in accordance with manufacturer's instructions.

E. Transport materials in covered trucks to prevent contamination of product and littering of surrounding areas.

F. Promptly inspect shipments to ensure that products comply with requirements, quantities are correct, and products are undamaged.

G. Provide equipment and personnel to handle products by methods to prevent soiling, disfigurement, or damage, and to minimize handling.

H. Arrange for the return of packing materials, such as wood pallets, where economically feasible.

3.06 STORAGE AND PROTECTION

A. Designate receiving/storage areas for incoming products so that they are delivered according to installation schedule and placed convenient to work area in order to minimize waste due to excessive materials handling and misapplication.

B. Store and protect products in accordance with manufacturers' instructions.

C. Store with seals and labels intact and legible.

D. Store sensitive products in weather tight, climate controlled, enclosures in an environment favorable to product.

E. For exterior storage of fabricated products, place on sloped supports above ground.

F. Protect products from damage or deterioration due to construction operations, weather, precipitation, humidity, temperature, sunlight and ultraviolet light, dirt, dust, and other contaminants.

G. Comply with manufacturer's warranty conditions, if any.

H. Cover products subject to deterioration with impervious sheet covering. Provide ventilation to prevent condensation and degradation of products.

I. Prevent contact with material that may cause corrosion, discoloration, or staining.

J. Provide equipment and personnel to store products by methods to prevent soiling, disfigurement, or damage.

K. Arrange storage of products to permit access for inspection. Periodically inspect to verify products are undamaged and are maintained in acceptable condition.

END OF SECTION

SUBSTITUTION REQUEST: DATE SUBMITTED _____

1.01 SUBMIT TO: _Brandon Reid, Project Manager, brandon.reid@hmkco.org_____

1.02 PROJECT: District Wide HVAC Upgrades - Bellview Elementary School

1.03 SPECIFIED ITEM:

A. SECTION NAME AND NUMBER: _____

B. PRODUCT TYPE AND NAME AND MODEL: _____

C. PARAGRAPH AND PRODUCT DESCRIPTION: _____

1.04 PROPOSED SUBSTITUTION:

A. MANUFACTURER AND MODEL NUMBER(S): _____

B. PRODUCT DESCRIPTION: _____

C. Attached data includes product description, specifications, drawings, photographs, performance, test data and **point by point comparative matrix** adequate for evaluation of request including identification of applicable data portions. Attached data also includes description of changes to Contract Documents the proposed substitution requires for proper installation.

D. It is the responsibility of the requestee to assemble a comparative matrix outlining key elements of proposed substitution.

1.05 UNDERSIGNED CERTIFIES FOLLOWING ITEMS, UNLESS MODIFIED BY ATTACHMENTS, ARE CORRECT:

A. Proposed substitution does not affect dimensions shown on the drawings.

B. Undersigned pays for changes to building design, including engineering design, detailing, and construction costs caused by proposed substitution.

C. Proposed substitution has no adverse effect on other trades, construction schedule, or specified warranty requirements.

D. Maintenance and service parts are available locally or readily obtainable for proposed substitution.

1.06 UNDERSIGNED FURTHER CERTIFIES FUNCTION, APPEARANCE, AND QUALITY OF PROPOSED SUBSTITUTION ARE EQUIVALENT OR SUPERIOR TO SPECIFIED ITEM.

1.07 UNDERSIGNED FURTHER CERTIFIES THAT THE MANUFACTURER OF THE PROPOSED SUBSTITUTION IS AWARE OF THIS SUBSTITUTION REQUEST AND AGREES TO THE STATEMENTS NOTED ABOVE.

1.08 UNDERSIGNED AGREES THAT THE TERMS AND CONDITIONS FOR SUBSTITUTIONS FOUND IN BIDDING DOCUMENTS APPLY TO THIS PROPOSED SUBSTITUTION.

1.09 SUBMITTED BY:

A. PRINT NAME: _____

SIGNATURE:_____

B. FIRM NAME: _____

C. FULL MAILING ADDRESS: _____

City: _____ State: _____ Zip:_____

D. PHONE: _____ E-MAIL: _____

1.10 FOR USE BY ARCHITECT OR ENGINEER

A. APPROVED OR APPROVED AS NOTED BY: _____

B. NOT APPROVED BY: _____

C. RECEIVED TOO LATE: _____

D. REMARKS: _____

E. DATE OF RESPONSE: _____

END OF SECTION

PART 1 GENERAL

1.01 SECTION INCLUDES

A. Requirement for installer certification that they did not use any non-compliant products.

B. VOC restrictions for product categories listed below under "DEFINITIONS."

C. All products of each category that are installed in the project must comply; Owner's project goals do not allow for partial compliance.

1.02 RELATED REQUIREMENTS

A. Section 01 3000 - Administrative Requirements: Submittal procedures.

C. Section 01 4000 - Quality Requirements: Procedures for testing and certifications.

D. Section 01 5721 - Indoor Air Quality Controls: Procedures and testing.

E. Section 01 6000 - Product Requirements: Fundamental product requirements, substitutions and product options, delivery, storage, and handling.

1.03 DEFINITIONS

A. VOC-Restricted Products: All products of each of the following categories when installed or applied on-site in the building interior:

1. Adhesives, sealants, and sealer coatings.
2. Carpet.
3. Carpet tile.
4. Resilient floor coverings.
5. Paints and coatings.
6. Insulation.
7. Gypsum board.
8. Acoustical ceilings and panels.
9. Cabinet work.
10. Wall coverings.
11. Composite wood and agrifiber products used either alone or as part of another product.
12. Other products when specifically stated in the specifications.

B. Interior of Building: Anywhere inside the exterior weather barrier.

C. Adhesives: All gunnable, trowelable, liquid-applied, and aerosol adhesives, whether specified or not; including flooring adhesives, resilient base adhesives, and pipe jointing adhesives.

D. Sealants: All gunnable, trowelable, and liquid-applied joint sealants and sealant primers, whether specified or not; including firestopping sealants and duct joint sealers.

1.04 REFERENCE STANDARDS

A. CRI (GLP) - Green Label Plus Testing Program - Certified Products; Carpet and Rug Institute; Current Edition.

B. GreenSeal GC-03 - Anti-Corrosive Paints; Green Seal, Inc.; 2007

C. GreenSeal GS-11 - Paints; Green Seal, Inc.; 1993.

D. GreenSeal GS-36 - Commercial Adhesives; Green Seal, Inc.; 2011.

E. SCAQMD 1113 - South Coast Air Quality Management District Rule No.1113; current edition; http://www.aqmd.gov/

F. SCAQMD 1168 - South Coast Air Quality Management District Rule No.1168; current edition; www.aqmd.gov

G. SCS (CPD) - SCS Certified Products; Scientific Certification Systems; current listings at www.scscertified.com

1.05 SUBMITTALS

A. See Section 01 3000 - Administrative Requirements, for submittal procedures.

B. Evidence of Compliance: Submit for each different product in each applicable category.

C. Product Data: For each VOC-restricted product used in the project, submit evidence of compliance.

D. Installer Certifications Regarding Prohibited Content: Require each installer of any type of product (not just the products for which VOC restrictions are specified) to certify that either 1) no adhesives, joint sealants, paints, coatings, or composite wood or agrifiber products have been used in the installation of his products, or 2) that such products used comply with these requirements.

PART 2 PRODUCTS

2.01 MATERIALS

A. All Products: Comply with the most stringent of federal, State, and local requirements, or these specifications.

B. Adhesives and Joint Sealants: Provide only products having volatile organic compound (VOC) content not greater than required by South Coast Air Quality Management District Rule No.1168.

1. Definition: This provision applies to gunnable, trowelable, and liquid-applied adhesives, sealants, and sealant primers used anywhere on the interior of the building inside the weather barrier, including duct sealers and fire stopping.

2. ~~LEED:~~ Not Used

3. Certification: Require each installer to certify compliance and submit product data showing product content.

    a. Evidence of Compliance: Acceptable types of evidence are:

        1) Report of laboratory testing performed in accordance with requirements.

        2) Published product data showing compliance with requirements.

        3) Certification by manufacturer that product complies with requirements.

        4) SCAQMD limits for specific product categories:

            a) Architectural ApplicationsVOC Limit g/L less water

                1. Indoor Carpet Adhesives 50

                2. Carpet Pad Adhesives 50

                3. Outdoor Carpet Adhesives 150

                4. Wood Flooring Adhesive 100

                5. Rubber Floor Adhesives 60

                6. Subfloor Adhesives 50

                7. Ceramic Tile Adhesives 65

                8. VCT and Asphalt Tile Adhesives 50

                9. Dry Wall and Panel Adhesives 50

                10. Cove Base Adhesives 50

                11. Multipurpose Construction Adhesives 70

                12. Structural Glazing Adhesives 100

                13. Single Ply Roof Membrane Adhesives 250

            b) Specialty Applications VOC Limits g/L less water

                1. PVC Welding 510

                2. CPVC Welding490

                3. ABS Welding 325

4. Plastic Cement Welding250
5. Adhesive Primer for Plastic 550
6. Computer Diskette Manufacturing350
7. Contact Adhesive 80
8. Special Purpose Contact Adhesive250
9. Tire Retread 100
10. Adhesive Primer for Traffic Marking Tape150
11. Structural Wood Member Adhesive140
12. Sheet Applied Rubber Lining Operations850
13. Top and Trim Adhesive250

c) Substrate Specific ApplicationsVOC Limit g/L less water

1. Metal to Metal 30
2. Plastic Foams 50
3. Porous Material (except wood) 50
4. Wood 30
5. Fiberglass 80

d) Sealants VOC Limit g/L less water

1. Architectural 250
2. Marine Deck 760
3. Nonmembrane Roof 300
4. Roadway 250
5. Single-Ply Roof Membrane 450
6. Other 420

e) Sealant Primers VOC Limit g/L less water

1. Architectural Non Porous250
2. Architectural Porous775
3. Modified Bituminous 500
4. Marine Deck 760

5. Other 750

C. Aerosol Adhesives: Provide only products having volatile organic compound (VOC) content not greater than required by GreenSeal GS-36.

1. ~~LEED:~~ Not Used

2. Certification: Require each installer to certify compliance and submit product data showing product content.

a. Evidence of Compliance: Acceptable types of evidence are:

1) Current GreenSeal Certification.

2) Report of laboratory testing performed in accordance with GreenSeal GS-36 requirements.

3) Published product data showing compliance with requirements.

3. GreenSeal limits for specific product categories:

a. Aerosol AdhesivesVOC Weight g/L minus water

1) General purpose mist spray65% VOCs by weight

2) General purpose web spray55% VOCs by weight

3) Special purpose aerosol adhesives (all types)70% VOCs by weight

D. Paints and Coatings:

1. Definition: This provision applies to paints and coatings used anywhere on the interior of the building inside the weather barrier, including all primers and sealers.

2. Provide coatings that comply with the most stringent requirements specified in the following:

a. Architectural Paints and Coatings: Do not exceed VOC content limits established in GreenSeal GS-11.

b. Anti-Corrosive and Anti-Rust Paints: Do not exceed VOC content limits established in GreenSeal GS-03.

c. Clear Wood Finishes, Floor Coatings, Stains, Primers and Shellacs: Do not exceed the VOC content limits established in SCAQMD Rule No. 1113.

3. Determination of VOC Content: Testing and calculation in accordance with 40 CFR 59, Subpart D (EPA Method 24), exclusive of colorants added to a tint base and water added at project site; or other method acceptable to authorities having jurisdiction.

4. This provision is applicable to LEED Credit EQ 4.1; submit LEED Prohibited Content Installer Certification Forms and all support material per section 01 35 16.07.

5. Certification: Require each installer to certify compliance and submit product data showing product content.

   a. Evidence of Compliance: Acceptable types of evidence are:

      1) Report of laboratory testing performed in accordance with requirements.

      2) Published product data showing compliance with requirements.

6. Limits for specific product categories:

   a. Architectural paints, coatings and primers applied to interior walls and ceilings per GreenSeal GS-11

      1) Flats: 50 g/L

      2) Non-Flats: 150 g/L

      3) Primers 50 g/L

   b. Interior Anti-Corrosive and Anti-rust paints, coatings and primers per GreenSeal GS-03, Anti-Corrosive Paints

      1) 250 g/L

   c. All other coatings, paints and sealers per SCAQMD Rule #1113, Architectural Coatings

      1) Coating CategoryVOC Limit g/L

         (a) Bond Breakers 350

         (b) Clear Wood Finishes275

         (c) Varnish275

         (d) Sanding Sealers275

         (e) Lacquer275

         (f) Clear Brushing Lacquer275

         (g) Concrete-Curing Compounds100

         (h) Concrete-Curing Compounds For Roadways and Bridges350

         (i) Dry-Fog Coatings150

         (j) Fire-Proofing Exterior Coatings350

         (k) Fire-Retardant Coatings Clear 650

         (l) Fire-Retardant Coatings Pigmented 350

(m) Flats50

(n) Floor Coatings50

(o) Graphic Arts (Sign) Coatings 500

(p) Industrial Maintenance (IM) Coatings100

(q) High Temperature IM Coatings 420

(r) Zinc-Rich IM Primers100

(s) Japans/Faux Finishing Coatings350

(t) Magnesite Cement Coatings450

(u) Mastic Coatings300

(v) Metallic Pigmented Coatings500

(w) Multi-Color Coatings250

(x) Nonflat Coatings50

(y) Nonflat High Gloss50

(z) Pigmented Lacquer 275

(aa) Pre-Treatment Wash Primers420

(ab) Primers, Sealers, and Undercoaters100

(ac) Quick-Dry Enamels 50

(ad) Quick-Dry Primers, Sealers, and Undercoaters100

(ae) Recycled Coatings250

(af) Roof Coatings50

(ag) Roof Coatings, Aluminum100

(ah) Roof Primers, Bituminous350

(ai) Rust Preventative Coatings100

(aj) Shellac Clear 730

(ak) Shellac Pigmented 550

(al) Specialty Primers100

(am) Stains100

(an) Stains, Interior 250

(ao) Swimming Pool Coatings Repair340

(ap) Swimming Pool Coatings Other340

(aq) Traffic Coatings100

(ar) Waterproofing Sealers100

(as) Waterproofing Concrete/Masonry Sealers100

(at) Wood Preservatives Below-Ground350

(au) Wood Preservatives- Other 350

(av) Low-Solids Coating 120

E. Carpet and Adhesive: Provide products having VOC content not greater than that required for CRI Green Label Plus certification.

1. Evidence of Compliance: Acceptable types of evidence are:

a. Current Green Label Plus Certification.

b. Report of laboratory testing performed in accordance with requirements.

F. Carpet Tile and Adhesive: Provide products having VOC content not greater than that required for CRI Green Label Plus certification.

1. Evidence of Compliance: Acceptable types of evidence are:

a. Current Green Label Plus Certification.

b. Report of laboratory testing performed in accordance with requirements.

G. Composite Wood and Agrifiber Products and Adhesives Used for Laminating Them: Provide products having no added urea-formaldehyde resins.

1. Evidence of Compliance: Acceptable types of evidence are:

a. Current SCS "No Added Urea Formaldehyde" certification; www.scscertified.com.

b. Published product data showing compliance with requirements.

H. Other Product Categories: Comply with limitations specified elsewhere.

PART 3 EXECUTION

3.01 FIELD QUALITY CONTROL

A. Owner reserves the right to reject non-compliant products, whether installed or not, and require their removal and replacement with compliant products at no extra cost to Owner.

B. Additional costs to restore indoor air quality due to installation of non-compliant products will be borne by Contractor.

END OF SECTION

PART 1 GENERAL

1.01 SECTION INCLUDES

A. Examination, preparation, and general installation procedures.

B. Requirements for alterations work, including selective demolition, except removal, disposal, and/or remediation of hazardous materials and toxic substances.

C. Requirements for forming openings in existing construction for all work including mechanical and electrical work.

D. Pre-installation meetings.

E. Cutting and patching.

F. Surveying for laying out the work.

G. Cleaning and protection.

H. Starting of systems and equipment.

I. Demonstration and instruction of Owner personnel.

J. Closeout procedures, including Contractor's Correction Punch List, except payment procedures.

K. General requirements for maintenance service.

L. Substantial completion

M. Final Completion

N. Additional fees for delays in completing work

1.02 RELATED REQUIREMENTS

A. Section 01 1000 - Summary: Limitations on working in existing building; continued occupancy; work sequence; identification of salvaged and relocated materials.

B. Section 01 3000 - Administrative Requirements: Submittals procedures, Electronic document submittal service.

C. Section 01 4000 - Quality Requirements: Testing and inspection procedures.

D. Section 01 5000 - Temporary Facilities and Controls: Temporary exterior enclosures.

E. Section 01 5000 - Temporary Facilities and Controls: Temporary interior partitions.

F. Section 01 5100 - Temporary Utilities: Temporary heating, cooling, and ventilating facilities.

G. Section 01 7419 - Construction Waste Management and Disposal: Additional procedures for trash/waste removal, recycling, salvage, and reuse.

H. Section 01 7800 - Closeout Submittals: Project record documents, operation and maintenance data, warranties and bonds.

1.03 REFERENCE STANDARDS

A. NFPA 241 - Standard for Safeguarding Construction, Alteration, and Demolition Operations; 2013.

1.04 SUBMITTALS

A. See Section 01 3000 - Administrative Requirements, for submittal procedures.

B. Survey work: Submit name, address, and telephone number of Surveyor before starting survey work.

1. On request, submit documentation verifying accuracy of survey work.

2. Submit a copy of site drawing signed by the Land Surveyor, that the elevations and locations of the work are in conformance with Contract Documents.

3. Submit surveys and survey logs for the project record.

C. Cutting and Patching: Submit written request in advance of cutting or alteration that affects:

1. Structural integrity of any element of Project.

2. Integrity of weather exposed or moisture resistant element.

3. Efficiency, maintenance, or safety of any operational element.

4. Visual qualities of sight exposed elements.

5. Work of Owner or separate Contractor.

6. Include in request:

a. Identification of Project.

b. Location and description of affected work.

c. Necessity for cutting or alteration.

d. Description of proposed work and products to be used.

e. Effect on work of Owner or separate Contractor.

f. Written permission of affected separate Contractor.

g. Date and time work will be executed.

D. Project Record Documents: Accurately record actual locations of capped and active utilities.

1.05 QUALIFICATIONS

A. For survey work, employ a land surveyor registered in the State in which the Project is located and acceptable to Architect. Submit evidence of Surveyor's Errors and Omissions insurance coverage in the form of an Insurance Certificate.

1.06 PROJECT CONDITIONS

A. Use of explosives is not permitted.

B. Grade site to drain. Maintain excavations free of water. Provide, operate, and maintain pumping equipment.

C. Protect site from puddling or running water. Provide water barriers as required to protect site from soil erosion.

D. Ventilate enclosed areas to assist cure of materials, to dissipate humidity, and to prevent accumulation of dust, fumes, vapors, or gases.

E. Dust Control: Execute work by methods to minimize raising dust from construction operations. Provide positive means to prevent air-borne dust from dispersing into atmosphere and over adjacent property.

1. Provide dust-proof enclosures to prevent entry of dust generated outdoors.

F. Erosion and Sediment Control: Plan and execute work by methods to control surface drainage from cuts and fills, from borrow and waste disposal areas. Prevent erosion and sedimentation.

1. Minimize amount of bare soil exposed at one time.

2. Provide temporary measures such as berms, dikes, and drains, to prevent water flow.

3. Construct fill and waste areas by selective placement to avoid erosive surface silts or clays.

4. Periodically inspect earthwork to detect evidence of erosion and sedimentation; promptly apply corrective measures.

G. Noise Control: Provide methods, means, and facilities to minimize noise produced by construction operations.

1. At All Times: Excessively noisy tools and operations will not be tolerated inside the building at any time of day; excessively noisy includes jackhammers.

2. Outdoors: Limit conduct of especially noisy exterior work to the hours of 8 am to 5 pm.

3. Indoors: Limit conduct of especially noisy interior work to the hours of 6 pm to 7 am.

H. Pest and Rodent Control: Provide methods, means, and facilities to prevent pests and insects from damaging the work.

I. Pollution Control: Provide methods, means, and facilities to prevent contamination of soil, water, and atmosphere from discharge of noxious, toxic substances, and pollutants produced by construction operations. Comply with federal, state, and local regulations.

1.07 COORDINATION

A. Coordinate work of alterations and renovations to expedite completion sequentially and to accommodate occupancy requirements.

B. Coordinate scheduling, submittals, and work of the various sections of the Project Manual to ensure efficient and orderly sequence of installation of interdependent construction elements, with provisions for accommodating items installed later.

C. Notify affected utility companies and comply with their requirements.

D. Verify that utility requirements and characteristics of new operating equipment are compatible with building utilities. Coordinate work of various sections having interdependent responsibilities for installing, connecting to, and placing in service, such equipment.

E. Coordinate space requirements, supports, and installation of mechanical and electrical work that are indicated diagrammatically on Drawings. Follow routing shown for pipes, ducts, and conduit, as closely as practicable; place runs parallel with lines of building. Utilize spaces efficiently to maximize accessibility for other installations, for maintenance, and for repairs.

F. In finished areas except as otherwise indicated, conceal pipes, ducts, and wiring within the construction. Coordinate locations of fixtures and outlets with finish elements.

G. Coordinate completion and clean-up of work of separate sections.

H. After Owner occupancy of premises, coordinate access to site for correction of defective work and work not in accordance with Contract Documents, to minimize disruption of Owner's activities.

1.08 CONTRACTOR'S FULL TIME SUPERVISION OF THE WORK

A. Contractor shall provide an on-site project superintendent to be present full time whenever work is occurring on site.

B. Contractor's Superintendent shall maintain a Daily Log of work activities at the site during construction.

1. Submit copies of the Daliy Logs to the Owner on a weekly basis.

PART 2 PRODUCTS

2.01 PATCHING MATERIALS

A. New Materials: As specified in product sections; match existing products and work for patching and extending work.

B. Type and Quality of Existing Products: Determine by inspecting and testing products where necessary, referring to existing work as a standard.

C. Product Substitution: For any proposed change in materials, submit request for substitution described in Section 01 6000 - Product Requirements.

PART 3 EXECUTION

3.01 EXAMINATION

A. Verify that existing site conditions and substrate surfaces are acceptable for subsequent work. Start of work means acceptance of existing conditions.

B. Verify that existing substrate is capable of structural support or attachment of new work being applied or attached.

C. Examine and verify specific conditions described in individual specification sections.

D. Take field measurements before confirming product orders or beginning fabrication, to minimize waste due to over-ordering or misfabrication.

E. Verify that utility services are available, of the correct characteristics, and in the correct locations.

F. Prior to Cutting: Examine existing conditions prior to commencing work, including elements subject to damage or movement during cutting and patching. After uncovering existing work, assess conditions affecting performance of work. Beginning of cutting or patching means acceptance of existing conditions.

3.02 PREPARATION

A. Clean substrate surfaces prior to applying next material or substance.

B. Seal cracks or openings of substrate prior to applying next material or substance.

C. Apply manufacturer required or recommended substrate primer, sealer, or conditioner prior to applying any new material or substance in contact or bond.

3.03 PREINSTALLATION MEETINGS

A. When required in individual specification sections, convene a preinstallation meeting at the site prior to commencing work of the section.

B. Require attendance of parties directly affecting, or affected by, work of the specific section.

C. Notify Architect seven days in advance of meeting date.

D. Prepare agenda and preside at meeting:

1. Review conditions of examination, preparation and installation procedures.

2. Review coordination with related work.

E. Record minutes and distribute copies within two days after meeting to participants, with two copies to Architect, Owner, participants, and those affected by decisions made.

3.04 LAYING OUT THE WORK

A. Verify locations of survey control points prior to starting work.

B. Promptly notify Architect of any discrepancies discovered.

C. Protect survey control points prior to starting site work; preserve permanent reference points during construction.

D. Promptly report to Architect the loss or destruction of any reference point or relocation required because of changes in grades or other reasons.

E. Replace dislocated survey control points based on original survey control. Make no changes without prior written notice to Architect.

F. Utilize recognized engineering survey practices.

G. Establish elevations, lines and levels. Locate and lay out by instrumentation and similar appropriate means:

1. Site improvements including pavements; stakes for grading, fill and topsoil placement; utility locations, slopes, and invert elevations.

2. Grid or axis for structures.

3. Building foundation, column locations, ground floor elevations.

H. Periodically verify layouts by same means.

I. Maintain a complete and accurate log of control and survey work as it progresses.

3.05 GENERAL INSTALLATION REQUIREMENTS

A. Install products as specified in individual sections, in accordance with manufacturer's instructions and recommendations, and so as to avoid waste due to necessity for replacement.

B. Make vertical elements plumb and horizontal elements level, unless otherwise indicated.

C. Install equipment and fittings plumb and level, neatly aligned with adjacent vertical and horizontal lines, unless otherwise indicated.

D. Make consistent texture on surfaces, with seamless transitions, unless otherwise indicated.

E. Make neat transitions between different surfaces, maintaining texture and appearance.

3.06 ALTERATIONS

A. The stability and integrity of the existing structure during demolition and selective demolition shall be maintained at levels generally acceptable within the construction industry by the use of temporary bracing, shoring, and underpinning until the proposed structure modifications are completed. In no case shall the existing structure be allowed to become unsafe during construction.

B. The design, installation, and removal of shoring and bracing systems required to provide temporary support of the existing structure during construction shall be the responsibility of the Contractor and shall be designed to support the dead, live, soil, earthquake, and wind loads that may be imposed on the structure during construction in accordance with industry standards and generally accepted engineering principals. Provide the services of a registered professional engineer to design these systems when required by Oregon State Statute and the building code.

C. Drawings showing existing construction and utilities are based on casual field observation and existing record documents only.

1. Verify that construction and utility arrangements are as shown.

2. Report discrepancies to Architect before disturbing existing installation.

3. Beginning of alterations work constitutes acceptance of existing conditions.

D. Keep areas in which alterations are being conducted separated from other areas that are still occupied.

1. Provide, erect, and maintain temporary dustproof partitions of construction specified in Section 01 5000 in locations indicated on drawings.

2. Provide appropriate temporary signage including signage for exit or building egress.

E. Maintain weatherproof exterior building enclosure except for interruptions required for replacement or modifications; take care to prevent water and humidity damage.

1. Where openings in exterior enclosure exist, provide construction to make exterior enclosure weatherproof.

2. Insulate existing ducts or pipes that are exposed to outdoor ambient temperatures by alterations work.

F. Comply with regulatory requirements for Alteration Work:

1. Conform to applicable code for demolition work, dust control, products requiring electrical disconnection and re-connection.

2. Obtain required permits from authorities.

3. Do not close or obstruct egress from any building exit or site exit.

4. Do not disable or disrupt building fire or life safety systems without 3 days' prior written notice to Owner.

5. Conform to applicable regulatory procedures when hazardous or contaminated materials are discovered. Stop all work in the area and notify the Owner's representative.

a. Owner will provide verification, abatement, and removal as required to complete the Work.

G. Remove existing work as indicated and as required to accomplish new work.

1. Remove items indicated on drawings.

2. Relocate items indicated on drawings.

3. Where new surface finishes are to be applied to existing work, perform removals, patch, and prepare existing surfaces as required to receive new finish; remove existing finish if necessary for successful application of new finish.

4. Where new surface finishes are not specified or indicated, patch holes and damaged surfaces to match adjacent finished surfaces as closely as possible

H. Services (Including but not limited to HVAC, Plumbing, Fire Protection, Electrical, and Telecommunications): Remove, relocate, and extend existing systems to accommodate new construction.

1. Notify affected utility companies before starting work and comply with their requirements.

2. Mark location and termination of utilities.

3. Maintain existing active systems that are to remain in operation; maintain access to equipment and operational components; if necessary, modify installation to allow access or provide access panel.

4. Do not interrupt existing utilities serving occupied or used facilities, except when authorized in writing by the Owner. Provide temporary services during interruption of existing utilities, as acceptable to the Owner

5. Where existing systems or equipment are not active and Contract Documents require reactivation, put back into operational condition; repair supply, distribution, and equipment as required.

6. Where existing active systems serve occupied facilities but are to be replaced with new services, maintain existing systems in service until new systems are complete and ready for service.

a. Disable existing systems only to make switchovers and connections; minimize duration of outages.

b. Provide temporary connections as required to maintain existing systems in service.

7. Verify that abandoned services serve only abandoned facilities.

8. Remove abandoned pipe, ducts, conduits, and equipment, including those above accessible ceilings; remove back to source of supply where possible, otherwise cap stub and tag with identification; patch holes left by removal using materials specified for new construction.

I. Protect existing work to remain.

1. Prevent movement of structure; provide shoring and bracing if necessary.

2. Perform cutting to accomplish removals neatly and as specified for cutting new work.

3. Repair adjacent construction and finishes damaged during removal work.

4. Cover finish floors to remain.

5. Use only rubber tired vehicles for conveying materials in building.

J. Adapt existing work to fit new work: Make as neat and smooth transition as possible.

1. When existing finished surfaces are cut so that a smooth transition with new work is not possible, terminate existing surface along a straight line at a natural line of division and make recommendation to Architect.

2. Where removal of partitions or walls results in adjacent spaces becoming one, rework floors, walls, and ceilings to a smooth plane without breaks, steps, or bulkheads.

3. Where a change of plane of 1/4 inch or more occurs in existing work, submit recommendation for providing a smooth transition for Architect review and request instructions.

4. Trim existing wood doors as necessary to clear new floor finish. Refinish trim as required.

K. Patching: Where the existing surface is not indicated to be refinished, patch to match the surface finish that existed prior to cutting. Where the surface is indicated to be refinished, patch so that the substrate is ready for the new finish.

L. Refinish existing surfaces as indicated:

1. Where rooms or spaces are indicated to be refinished, refinish all visible existing surfaces to remain to the specified condition for each material, with a neat transition to adjacent finishes.

2. If mechanical or electrical work is exposed accidentally during the work, re-cover and refinish to match.

M. Clean existing systems and equipment.

N. Remove demolition debris and abandoned items from alterations areas and dispose of off-site; do not burn or bury.

O. Clean remaining structure, equipment and facilities of all dirt, dust, and debris caused by demolition work. Return areas to conditions existing prior to the start of the work.

P. Do not begin new construction in alterations areas before demolition is complete.

Q. Comply with all other applicable requirements of this section.

3.07 CUTTING AND PATCHING

A. Whenever possible, execute the work by methods that avoid cutting or patching.

B. See Alterations article above for additional requirements.

C. Perform whatever cutting and patching is necessary to:

1. Complete the work.

2. Fit products together to integrate with other work.

3. Provide openings for penetration of mechanical, electrical, and other services.

4. Match work that has been cut to adjacent work.

5. Repair areas adjacent to cuts to required condition.

6. Repair new work damaged by subsequent work.

7. Remove samples of installed work for testing when requested.

8. Remove and replace defective and non-conforming work.

D. Execute work by methods that avoid damage to other work and that will provide appropriate surfaces to receive patching and finishing. In existing work, minimize damage and restore to original condition.

E. Employ original installer to perform cutting for weather exposed and moisture resistant elements, and sight exposed surfaces.

F. Cut rigid materials using masonry saw or core drill. Pneumatic tools not allowed without prior approval.

G. Restore work with new products in accordance with requirements of Contract Documents.

H. Fit work air tight to pipes, sleeves, ducts, conduit, and other penetrations through surfaces.

I. At penetrations of fire rated walls, partitions, ceiling, or floor construction, completely seal voids with fire rated material in accordance with Section 07 8400, to full thickness of the penetrated element.

J. Sawcutting:

1. Employ experienced sawcutting contractor to make all holes, or slab and pavement cutting shown in drawings for architectural, structural, mechanical and electrical work.

2. Do not use water saws in occupied areas, unless otherwise approved.

3. Cut openings square and plumb with sharp edges. Minimize overcutting at corners.

4. Verify location of existing utilities in work area and make proper precautions to protect, disconnect and relocate, or terminate services as directed.

K. Patching:

1. Finish patched surfaces to match finish that existed prior to patching. On continuous surfaces, refinish to nearest intersection or natural break. For an assembly, refinish entire unit.

2. Match color, texture, and appearance.

3. Repair patched surfaces that are damaged, lifted, discolored, or showing other imperfections due to patching work. If defects are due to condition of substrate, repair substrate prior to repairing finish.

L. Maintain adequate Temporary Support necessary to assure structural integrity of affected Work.

M. Protect other portions of Project Work against damage and discoloration.

N. Protect Work exposed by cutting against damage and discoloration.

O. Refinish surfaces to match adjacent finish. For continuous surfaces, refinish to nearest intersection or natural break. For an assembly, refinish entire unit.

P. Make neat transitions. Patch work to match adjacent work in texture and appearance. Where new work abuts or aligns with existing, perform a smooth and even transition.

Q. Patch or replace surfaces that are damaged, lifted, discolored, or showing other imperfections due to patching work. Repair substrate prior to patching finish. Finish patches to produce uniform finish and texture over entire area. When finish cannot be matched, refinish entire surface to nearest intersections.

3.08 PROGRESS CLEANING

A. Maintain areas free of waste materials, debris, and rubbish. Maintain site in a clean and orderly condition.

B. Remove debris and rubbish from pipe chases, plenums, attics, crawl spaces, and other closed or remote spaces, prior to enclosing the space.

C. Broom and vacuum clean interior areas prior to start of surface finishing, and continue cleaning to eliminate dust.

D. Collect and remove waste materials, debris, and trash/rubbish from site periodically and dispose off-site; do not burn or bury.

3.09 PROTECTION OF INSTALLED WORK

A. Protect installed work from damage by construction operations.

B. Provide special protection where specified in individual specification sections.

C. Provide temporary and removable protection for installed products. Control activity in immediate work area to prevent damage.

D. Provide protective coverings at walls, projections, jambs, sills, and soffits of openings.

E. Protect finished floors, stairs, and other surfaces from traffic, dirt, wear, damage, or movement of heavy objects, by protecting with durable sheet materials.

F. Prohibit traffic or storage upon waterproofed or roofed surfaces. If traffic or activity is necessary, obtain recommendations for protection from waterproofing or roofing material manufacturer.

G. Prohibit traffic from landscaped areas.

H. Remove protective coverings when no longer needed; reuse or recycle plastic coverings if possible.

3.10 SYSTEM STARTUP

A. Coordinate schedule for start-up of various equipment and systems.

B. Notify Architect and owner seven days prior to start-up of each item.

C. Verify that each piece of equipment or system has been checked for proper lubrication, drive rotation, belt tension, control sequence, and for conditions that may cause damage.

D. Verify tests, meter readings, and specified electrical characteristics agree with those required by the equipment or system manufacturer.

E. Verify that wiring and support components for equipment are complete and tested.

F. Execute start-up under supervision of applicable Contractor personnel and manufacturer's representative in accordance with manufacturers' instructions.

G. When specified in individual specification Sections, require manufacturer to provide authorized representative to be present at site to inspect, check, and approve equipment or system installation prior to start-up, and to supervise placing equipment or system in operation.

H. Submit a written report that equipment or system has been properly installed and is functioning correctly.

3.11 DEMONSTRATION AND INSTRUCTION

A. Demonstrate operation and maintenance of products to Owner's personnel two weeks prior to date of Substantial Completion.

B. Demonstrate start-up, operation, control, adjustment, trouble-shooting, servicing, maintenance, and shutdown of each item of equipment at scheduled time, at equipment location.

C. For equipment or systems requiring seasonal operation, perform demonstration for other season within six months.

D. Provide a qualified person who is knowledgeable about the Project to perform demonstration and instruction of owner personnel.

E. Utilize operation and maintenance manuals as basis for instruction. Review contents of manual with Owner's personnel in detail to explain all aspects of operation and maintenance.

F. Prepare and insert additional data in operations and maintenance manuals when need for additional data becomes apparent during instruction.

G. The amount of time required for instruction on each item of equipment and system is that specified in individual sections.

3.12 ADJUSTING

A. Adjust operating products and equipment to ensure smooth and unhindered operation.

B. Testing, adjusting, and balancing HVAC systems: See Section 23 0593 - Testing, Adjusting, and Balancing for HVAC.

3.13 FINAL CLEANING

A. Use cleaning materials that are nonhazardous.

B. Clean interior and exterior glass, surfaces exposed to view; remove temporary labels, stains and foreign substances, polish transparent and glossy surfaces, vacuum carpeted and soft surfaces.

C. Remove all labels that are not permanent. Do not paint or otherwise cover fire test labels or nameplates on mechanical and electrical equipment.

D. Clean equipment and fixtures to a sanitary condition with cleaning materials appropriate to the surface and material being cleaned.

E. Clean interior floors in accordance with flooring manufacturer instructions.

F. Clean filters of operating equipment.

G. Clean debris from roofs, gutters, downspouts, scuppers, overflow drains, area drains, and drainage systems.

H. Clean site; sweep paved areas, rake clean landscaped surfaces.

I. Remove waste, surplus materials, trash/rubbish, and construction facilities from the site; dispose of in legal manner; do not burn or bury.

3.14 CLOSEOUT PROCEDURES

A. Make submittals that are required by governing or other authorities.

B. Accompany Project Coordinator on preliminary inspection to determine items to be listed for completion or correction in the Contractor's Correction Punch List for Contractor's Notice of Substantial Completion.

C. Notify Architect when work is considered ready for Architect's Substantial Completion inspection.

D. Conduct Substantial Completion inspection and create Final Correction Punch List containing Architect's and Contractor's comprehensive list of items identified to be completed or corrected and submit to Architect.

3.15 SUBSTANTIAL COMPLETION

A. Submit written certification that Contract Documents have been reviewed, work has been inspected, and that work is complete in accordance with Contract Documents and ready for Architect's review.

B. Complete all required maintenance work prior to the date of substantial completion.

C. When Contractor considers Work substantially complete, as defined in General Conditions, submit to the Architect:

1. Written notice that Work, or designated portion thereof, is substantially complete.

2. List of Items to be completed or corrected.

3. Copy of Final or Temporary Occupancy Permit.

D. Architect will, as soon as possible thereafter, make an observation visit to the site to determine completion status.

E. Should Architect determine that Work is not substantially complete:

1. Architect will promptly notify Contractor in writing, giving reasons therefore.

2. Contractor shall remedy Work deficiencies, and send second notice of substantial completion to Architect.

3. Architect will review the corrected work.

F. When Architect concurs that Work is substantially complete, Architect will:

1. Prepare Certificate of Substantial Completion, accompanied by Contractor's list of items to be completed or corrected, as verified and amended by Architect.

2. Submit Certificate to Owner and Contractor for their written acceptance of the responsibilities assigned to them in the Certificate.

G. Correct items of work listed in executed Certificates of Substantial Completion and comply with requirements for access to Owner-occupied areas.

H. Notify Architect when work is considered finally complete.

I. Complete items of work determined by Architect's final inspection.

J. See: ***General Conditions of the Contract for Construction*** for additonal requirements.

3.16 FINAL ACCEPTANCE

A. When Contractor considers Work complete, submit written certification that:

1. Contract Documents have been reviewed.

2. Contractor has inspected Work for compliance with Contract Documents.

3. Work has been completed in accordance with Contract Documents.

4. Equipment and Systems have been tested in presence of Owner's Representative and are operational.

5. Work is complete and ready for final inspection.

B. Architect will, as soon as possible thereafter, make an observation visit to the site to determine completion status.

C. Should Architect consider Work incomplete or defective:

1. Architect will promptly notify Contractor in writing, listing incomplete or defective Work.

2. Contractor shall immediately remedy deficiencies, and send second written certification to Architect that Work is complete.

3. Architect will review the corrected Work.

D. When Architect finds Work acceptable under Contract Documents, Architect will request Contractor to make closeout submittals.

E. See: ***General Conditions of the Contract for Construction*** for additonal requirements.

3.17 ADDITIONAL FEES FOR DELAYS IN COMPLETING THE WORK

A. Architect will make 2 visits to the project site, one at Substantial Completion and one at Final Completion.

B. Should Architect be required to make more than the stated 2 final site visits due to Contractor's failure to correct specified deficiencies:

1. Owner will compensate Architect for additional services.

2. Owner will deduct Architect's compensation amount from Contractor's final payment as follows:

a. Principal's time at their contracted hourly rate.

b. Employees' time at their contracted hourly rate.

c. Consultant employees and Others at 1.1 times the direct cost incurred.

d. Charges will be made for necessary travel time, commercial air fare, auto expense computed at current allowable IRS mileage rate, room and board, and all other expenses incurred in making inspections.

END OF SECTION

PART 1 GENERAL

1.01 WASTE MANAGEMENT REQUIREMENTS

A. Owner requires that this project generate the least amount of trash and waste possible.

B. Employ processes that ensure the generation of as little waste as possible due to error, poor planning, breakage, mishandling, contamination, or other factors.

C. Minimize trash/waste disposal in landfills; reuse, salvage, or recycle as much waste as economically feasible.

D. Required Recycling, Salvage, and Reuse: The following may not be disposed of in landfills or by incineration:

1. Aluminum and plastic beverage containers.

2. Corrugated cardboard.

3. Wood pallets.

4. Clean dimensional wood: May be used as blocking or furring.

5. Land clearing debris, including brush, branches, logs, and stumps; see Section 31 1000 - Site Clearing for use options.

6. Metals, including packaging banding, metal studs, sheet metal, structural steel, piping, reinforcing bars, door frames, and other items made of steel, iron, galvanized steel, stainless steel, aluminum, copper, zinc, lead, brass, and bronze.

7. Fluorescent lamps (light bulbs).

E. Contractor shall submit periodic Waste Disposal Reports; all landfill disposal, recycling, salvage, and reuse must be reported regardless of to whom the cost or savings accrues; use the same units of measure on all reports.

F. Contractor shall develop and follow a Waste Management Plan designed to implement these requirements.

G. Methods of trash/waste disposal that are not acceptable are:

1. Burning on the project site.

2. Burying on the project site.

3. Dumping or burying on other property, public or private.

4. Other illegal dumping or burying.

5. Incineration, either on- or off-site.

6. Use of Owner's trash receptacles.

H. Regulatory Requirements: Contractor is responsible for knowing and complying with regulatory requirements, including but not limited to Federal, state and local

requirements, pertaining to legal disposal of all construction and demolition waste materials.

1.02 RELATED REQUIREMENTS

A. Section 01 3000 - Administrative Requirements: Additional requirements for project meetings, reports, submittal procedures, and project documentation.

B. Section 01 5000 - Temporary Facilities and Controls: Additional requirements related to trash/waste collection and removal facilities and services.

C. Section 01 6000 - Product Requirements: Waste prevention requirements related to delivery, storage, and handling.

D. Section 01 7000 - Execution and Closeout Requirements: Trash/waste prevention procedures related to demolition, cutting and patching, installation, protection, and cleaning.

1.03 DEFINITIONS

A. Clean: Untreated and unpainted; not contaminated with oils, solvents, caulk, or the like.

B. Construction and Demolition Waste: Solid wastes typically including building materials, packaging, trash, debris, and rubble resulting from construction, remodeling, repair and demolition operations.

C. Hazardous: Exhibiting the characteristics of hazardous substances, i.e., ignitibility, corrosivity, toxicity or reactivity.

D. Nonhazardous: Exhibiting none of the characteristics of hazardous substances, i.e., ignitibility, corrosivity, toxicity, or reactivity.

E. Nontoxic: Neither immediately poisonous to humans nor poisonous after a long period of exposure.

F. Recyclable: The ability of a product or material to be recovered at the end of its life cycle and remanufactured into a new product for reuse by others.

G. Recycle: To remove a waste material from the project site to another site for remanufacture into a new product for reuse by others.

H. Recycling: The process of sorting, cleansing, treating and reconstituting solid waste and other discarded materials for the purpose of using the altered form. Recycling does not include burning, incinerating, or thermally destroying waste.

I. Return: To give back reusable items or unused products to vendors for credit.

J. Reuse: To reuse a construction waste material in some manner on the project site.

K. Salvage: To remove a waste material from the project site to another site for resale or reuse by others.

L. Sediment: Soil and other debris that has been eroded and transported by storm or well production run-off water.

M. Source Separation: The act of keeping different types of waste materials separate beginning from the first time they become waste.

N. Toxic: Poisonous to humans either immediately or after a long period of exposure.

O. Trash: Any product or material unable to be reused, returned, recycled, or salvaged.

P. Waste: Extra material or material that has reached the end of its useful life in its intended use. Waste includes salvageable, returnable, recyclable, and reusable material.

1.04 SUBMITTALS

A. See Section 01 3000 - Administrative Requirements, for submittal procedures.

B. Submit Waste Management Plan within 10 calendar days after receipt of Notice of Award of Bid, or prior to any trash or waste removal, whichever occurs sooner; submit projection of all trash and waste that will require disposal and alternatives to landfilling.

C. Waste Management Plan: Include the following information:

1. Analysis of the trash and waste projected to be generated during the entire project construction cycle, including types and quantities.

2. Landfill Options: The name, address, and telephone number of the landfill(s) where trash/waste will be disposed of, the applicable landfill tipping fee(s), and the projected cost of disposing of all project trash/waste in the landfill(s).

3. Landfill Alternatives: List all waste materials that will be diverted from landfills by reuse, salvage, or recycling.

D. Waste Disposal Reports: Submit at specified intervals, with details of quantities of trash and waste, means of disposal or reuse, and costs; show both totals to date and since last report.

1. Submit updated Report with each Application for Progress Payment; failure to submit Report will delay payment.

2. Submit Report on a form acceptable to Owner.

3. Landfill Disposal: Include the following information:

a. Identification of material.

b. Amount, in tons or cubic yards, of trash/waste material from the project disposed of in landfills.

c. State the identity of landfills, total amount of tipping fees paid to landfill, and total disposal cost.

d. Include manifests, weight tickets, receipts, and invoices as evidence of quantity and cost.

4. Recycled and Salvaged Materials: Include the following information for each:

a. Identification of material, including those retrieved by installer for use on other projects.

b. Amount, in tons or cubic yards, date removed from the project site, and receiving party.

c. Transportation cost, amount paid or received for the material, and the net total cost or savings of salvage or recycling each material.

d. Include manifests, weight tickets, receipts, and invoices as evidence of quantity and cost.

e. Certification by receiving party that materials will not be disposed of in landfills or by incineration.

5. Material Reused on Project: Include the following information for each:

a. Identification of material and how it was used in the project.

b. Amount, in tons or cubic yards.

c. Include weight tickets as evidence of quantity.

6. Other Disposal Methods: Include information similar to that described above, as appropriate to disposal method.

PART 2 PRODUCTS - NOT USED

PART 3 EXECUTION

3.01 WASTE MANAGEMENT PLAN IMPLEMENTATION

A. Manager: Designate an on-site person or persons responsible for instructing workers and overseeing and documenting results of the Waste Management Plan.

B. Spill Response Planning - Establish spill prevention and cleanup procedures. Identify all potential spill areas and develop procedures for avoiding and responding to spills should they occur.

C. Communication: Distribute copies of the Waste Management Plan to job site foreman, each subcontractor, Owner, and Architect.

D. Instruction: Provide on-site instruction of appropriate separation, handling, and recycling, salvage, reuse, and return methods to be used by all parties at the appropriate stages of the project.

E. Meetings: Discuss trash/waste management goals and issues at project meetings.

1. Pre-bid meeting.

2. Pre-construction meeting.

3. Regular job-site meetings.

F. Facilities: Provide specific facilities for separation and storage of materials for recycling, salvage, reuse, return, and trash disposal, for use by all contractors and installers.

1. Provide containers as required.

2. Provide adequate space for pick-up and delivery and convenience to subcontractors.

3. If an enclosed area is not provided, clearly lay out and label a specific area on-site.

4. Keep recycling and trash/waste bin areas neat and clean and clearly marked in order to avoid contamination of materials.

G. Hazardous Wastes: Separate, store, and dispose of hazardous wastes according to applicable regulations.

H. Recycling: Separate, store, protect, and handle at the site identified recyclable waste products in order to prevent contamination of materials and to maximize recyclability of identified materials. Arrange for timely pickups from the site or deliveries to recycling facility in order to prevent contamination of recyclable materials.

I. Reuse of Materials On-Site: Set aside, sort, and protect separated products in preparation for reuse.

J. Salvage: Set aside, sort, and protect products to be salvaged for reuse off-site.

END OF SECTION

PART 1 GENERAL

1.01 SECTION INCLUDES

A. Project Record Documents.

B. Operation and Maintenance Data.

C. Warranties and bonds.

1.02 RELATED REQUIREMENTS

A. ***Section 00 6000 General Conditions of Construction Contract*** for additonal requirements.

B. Section 01 3000 - Administrative Requirements: Submittals procedures, shop drawings, product data, and samples.

C. Section 01 7000 - Execution and Closeout Requirements: Contract closeout procedures.

D. Individual Product Sections: Specific requirements for operation and maintenance data.

E. Individual Product Sections: Warranties required for specific products or Work.

1.03 SUBMITTALS

A. Substantial Completion will not commence before the Operations and Maintenance Manuals, Warranties, and the Record Drawings are submitted in accordance with Section 01 7000.

B. Project Record Documents: Submit documents to Consultant Prior to Substantial Completion.

C. Operation and Maintenance Data:

1. Submit one paper copy of preliminary draft or proposed formats and outlines of contents before start of Work. Consultant will review draft and return the one copy with comments.

2. For equipment, or component parts of equipment put into service during construction and operated by Owner, submit completed documents within ten days after acceptance.

3. Submit one copy of completed documents 30 days prior to scheduled date of substantial completion.. This copy will be reviewed and returned, with Consultant comments. Revise content of all document sets as required prior to final submission.

4. Submit three digital copy in PDF file format on CD or DVD discs, and three paper sets of revised final documents in final form prior to date of Substantial Completion.

5. Either the draft copy or the final copy of the O&M manuals must be on the project site during any of the operator training scheduled for the project.

D. Warranties and Bonds:

1. For equipment or component parts of equipment put into service during construction with Owner's permission, submit documents within 10 days after acceptance.

2. Make other submittals within 10 days after Date of Substantial Completion, prior to final Application for Payment.

3. For items of Work for which acceptance is delayed beyond Date of Substantial Completion, submit within 10 days after acceptance, listing the date of acceptance as the beginning of the warranty period.

4. Submit three digital copies in PDF file format on CD or DVD discs, and [three] paper sets of final documents prior to date of Substantial Completion.

PART 2 PRODUCTS - NOT USED

PART 3 EXECUTION

3.01 PROJECT RECORD DOCUMENTS

A. Maintain on site one set of the following record documents; record actual revisions to the Work:

1. Drawings.

2. Specifications.

3. Addenda.

4. Change Orders and other modifications to the Contract.

B. Maintenance of documents and samples.

1. Store in Contractor's Field Office apart from Documents used for Construction.

2. Provide Files, Shelving and Cabinets necessary to safely and securely store Documents and Samples.

3. Maintain Documents in a clean, dry, legible, and good order.

4. Do not use Record Documents for Construction Purposes.

5. Make Documents available at all time for Consultant's inspection

C. Ensure entries are complete and accurate, enabling future reference by Owner.

D. Store record documents separate from documents used for construction.

E. Record information concurrent with construction progress.

F. Specifications: Legibly mark and record at each product section description of actual products installed, including the following:

1. Manufacturer's name and product model and number.

2. Product substitutions or alternates utilized.

3. Changes made by Addenda and modifications.

G. Record Drawings: Legibly mark each item to record actual construction including:

1. Measured depths of foundations in relation to finish first floor datum.

2. Measured horizontal and vertical locations of underground utilities and appurtenances, referenced to permanent surface improvements.

3. Measured locations of internal utilities and appurtenances concealed in construction, referenced to visible and accessible features of the Work.

4. Field changes of dimension and detail.

5. Details not on original Contract drawings.

3.02 OPERATION AND MAINTENANCE DATA

A. Source Data: For each product or system, list names, addresses and telephone numbers of Subcontractors and suppliers, including local source of supplies and replacement parts.

B. Product Data: Mark each sheet to clearly identify specific products and component parts, and data applicable to installation. Delete inapplicable information.

C. Drawings: Supplement product data to illustrate relations of component parts of equipment and systems, to show control and flow diagrams. Do not use Project Record Documents as maintenance drawings.

D. Typed Text: As required to supplement product data. Provide logical sequence of instructions for each procedure, incorporating manufacturer's instructions.

3.03 OPERATION AND MAINTENANCE DATA FOR MATERIALS AND FINISHES

A. For Each Product, Applied Material, and Finish:

1. Product data, with catalog number, size, composition, and color and texture designations.

2. Information for re-ordering custom manufactured products.

B. Instructions for Care and Maintenance: Manufacturer's recommendations for cleaning agents and methods, precautions against detrimental cleaning agents and methods, and recommended schedule for cleaning and maintenance.

C. Moisture protection and weather-exposed products: Include product data listing applicable reference standards, chemical composition, and details of installation. Provide recommendations for inspections, maintenance, and repair.

D. Additional information as specified in individual product specification sections.

E. Where additional instructions are required, beyond the manufacturer's standard printed instructions, have instructions prepared by personnel experienced in the operation and maintenance of the specific products.

F. Provide a listing in Table of Contents for design data, with tabbed fly sheet and space for insertion of data.

3.04 OPERATION AND MAINTENANCE DATA FOR EQUIPMENT AND SYSTEMS

A. In addition to requirements called for in other sections of this manual, provide the following:

B. For Each Item of Equipment and Each System:

1. Description of unit or system, and component parts.

2. Identify function, normal operating characteristics, and limiting conditions.

3. Include performance curves, with engineering data and tests.

4. Complete nomenclature and model number of replaceable parts.

C. Where additional instructions are required, beyond the manufacturer's standard printed instructions, have instructions prepared by personnel experienced in the operation and maintenance of the specific products.

D. Panelboard Circuit Directories: Provide electrical service characteristics, controls, and communications; typed.

E. Include color coded wiring diagrams as installed.

F. Operating Procedures: Include start-up, break-in, and routine normal operating instructions and sequences. Include regulation, control, stopping, shut-down, and emergency instructions. Include summer, winter, and any special operating instructions.

G. Maintenance Requirements: Include routine procedures and guide for preventative maintenance and trouble shooting; disassembly, repair, and reassembly instructions; and alignment, adjusting, balancing, and checking instructions.

H. Provide servicing and lubrication schedule, and list of lubricants required.

I. Include manufacturer's printed operation and maintenance instructions.

J. Include sequence of operation by controls manufacturer.

K. Provide original manufacturer's parts list, illustrations, assembly drawings, and diagrams required for maintenance.

L. Provide control diagrams by controls manufacturer as installed.

M. Provide Contractor's coordination drawings, with color coded piping diagrams as installed.

N. Provide charts of valve tag numbers, with location and function of each valve, keyed to flow and control diagrams.

O. Provide list of original manufacturer's spare parts, current prices, and recommended quantities to be maintained in storage.

P. Include test and balancing reports.

3.05 ASSEMBLY OF OPERATION AND MAINTENANCE MANUALS

A. Assemble operation and maintenance data into durable manuals for Owner's personnel use, with data arranged in the same sequence as, and identified by, the specification sections.

B. Where systems involve more than one specification section, provide separate tabbed divider for each system.

C. Prepare instructions and data by personnel experienced in maintenance and operation of described products.

D. Prepare data in the form of an instructional manual.

E. Digital O&M Manuals: In addition to binders described below, prepare manuals as PDF documents organized similar to the printed manuals. Copy to one or more properly labeled CD or DVD discs.

1. Searchable PDF files are preferred when possible. Table of Contents and any divider pages in these PDF files must be searchable.

2. Digital copies of O&M Manuals must be organized by section.

F. Paper & 3 Ring Binder O&M Manuals: Binders to be Wilson Jones #344 Series of equivalent, as approved by the Owner. Minimum ring size 1”. When multiple binders are used, correlate data into related consistent groupings. Do not overfill binders.

G. Cover: Identify each binder with typed or printed title OPERATION AND MAINTENANCE INSTRUCTIONS; identify title of Project; identify subject matter of contents.

H. Project Directory: Title and address of Project; names, addresses, and telephone numbers of Consultant, Consultants, Contractor and subcontractors, with names of responsible parties.

I. Tables of Contents: List every item separated by a divider, using the same identification as on the divider tab; where multiple volumes are required, include all volumes Tables of Contents in each volume, with the current volume clearly identified.

J. Dividers: Provide tabbed dividers for each separate product and system; identify the contents on the divider tab; immediately following the divider tab include a description of product and major component parts of equipment.

K. Text: Manufacturer's printed data, or typewritten data on 24 pound paper.

L. Drawings: Provide with reinforced punched binder tab. Bind in with text; fold larger drawings to size of text pages.

M. Arrangement of Contents: Organize each volume in parts as follows:

1. Project Directory.

2. Table of Contents, of all volumes, and of this volume.

3. Operation and Maintenance Data: Arranged by system, then by product category.

a. Source data.

b. Operation and maintenance data.

c. Field quality control data.

d. Original warranties and bonds.

3.06 WARRANTIES AND BONDS

A. Obtain warranties and bonds, executed in duplicate by responsible Subcontractors, suppliers, and manufacturers, within 10 days after completion of the applicable item of work. Except for items put into use with Owner's permission, leave date of beginning of time of warranty until Date of Substantial completion is determined.

B. Verify that documents are in proper form, contain full information, and when required have been are notarized.

C. Co-execute submittals when required.

D. Retain warranties and bonds until time specified for submittal.

E. Manual: Binders to be Wilson Jones #344 Series of equivalent, as approved by the Owner. Minimum ring size 1”. Do not overfill binders.

F. Cover: Identify each binder with typed or printed title WARRANTIES AND BONDS, with title of Project; name, address and telephone number of Contractor and equipment supplier; and name of responsible company principal.

G. Table of Contents: Neatly typed, in the sequence of the Table of Contents of the Project Manual, with each item identified with the number and title of the specification section in which specified, and the name of product or work item.

H. Separate each warranty or bond with index tab sheets keyed to the Table of Contents listing. Provide full information, using separate typed sheets as necessary. List Subcontractor, supplier, and manufacturer, with name, address, and telephone number of responsible principal.

3.07 EVIDENCE OF PAYMENTS & RELEASE OF LIENS

A. Contractor shall submit the following:

1. Contractor's Affidavit of Payment of Debts and Claims, AIA Document G-706 or equivilant form.

2. Contractor's Affidavit of Release of Liens, AIA Document G-706A or equivilant form, including the following:

a. Consent of Contractor's Surety to Final Payment, AIA Document G-707, or equivilant form.

b. Contractor's Release or Waiver of Liens.

c. Separate releases or waivers of lien for Subcontractors, Suppliers, and others with lien rights against Owner's Property, together with list of those parties.

3. Duly sign and execute all Submittals, before delivery to Consultant.

3.08 CONTRACTOR'S CLOSEOUT SUBMITTALS TO CONSULTANT

A. Wage Certification: Section 00 7343 and 01 2000.

B. Building Official's Certificate of Mechanical & Electrical Inspections.

C. Building Official's Certificate of Occupancy.

3.09 SPARE PART & MAINTENANCE MATERIAL SUBMITTALS TO OWNER

A. All spare parts and extra material are to be delivered to the owner prior to the date of substantial completion. Provide written confirmation of delivery, noting quantity and description as well as storage location. Obtain written acceptance from Owner for receipt of stored items.

B. Specific Requirements: See Specifications Sections.

C. Products: Identical to those included in Project Work.

D. Storage Location: Where directed by Owner.

E. Required Submittals: See Specification Sections.

3.10 FINAL ADJUSTMENT OF ACCOUNTS

A. Submit final statement of accounting to Consultant, including the following:

1. Original Contract Sum.

2. Additions and deductions resulting from:

a. Previous Change Orders.

b. Adjustments to Cash Allowances

c. Other adjustments.

d. Deductions for uncompleted Work.

e. Deductions for Reinspection Payments.

3. Total Contract Sum, as adjusted.

4. Previous Payments.

5. Sum remaining due.

B. Consultant will prepare and issue final Change Order, reflecting approved adjustments to Contract Sum not previously made by Change Orders.

3.11 FINAL APPLICATION FOR PAYMENT

A. Follow procedures specified in Section 01 2000.

END OF SECTION

PART 1 GENERAL

1.01 SUMMARY

A. Demonstration of products and systems to be commissioned and where indicated in specific specification sections.

B. Training of Owner personnel in operation and maintenance is required for:

1. All software-operated systems
2. HVAC systems and equipment
3. Plumbing equipment
4. Electrical systems and equipment
5. Conveying systems
6. Landscape irrigation
7. Items specified in individual product Sections

1.02 RELATED REQUIREMENTS

A. Section 01 7800 - Closeout Submittals: Operation and maintenance manuals

B. Section 01 9100 - General Commissioning Requirements: Additional requirements applicable to demonstration and training

C. Other Specification Sections: Additional requirements for demonstration and training

1.03 SUBMITTALS

A. See Section 01 3000 - Administrative Requirements, for submittal procedures; except:

1. Make all submittals specified in this section, and elsewhere where indicated for commissioning purposes, directly to the Commissioning Authority
2. Submit one copy to the Commissioning Authority, not to be returned
3. Make commissioning submittals on time schedule specified by Commissioning Authority
4. Submittals indicated as "Draft" are intended for the use of the Commissioning Authority in preparation of overall Training Plan; submit in editable electronic format

B. Draft Training Plans: Owner will designate personnel to be trained; tailor training to needs and skill-level of attendees.

1. Submit to Commissioning Authority for review and inclusion in overall training plan.
2. Submit not less than four weeks prior to start of training.
3. Revise and resubmit until acceptable.
4. Provide an overall schedule showing all training sessions.
5. Include at least the following for each training session:

a. Identification, date, time, and duration.

b. Description of products and/or systems to be covered.

c. Name of firm and person conducting training; include qualifications.

d. Intended audience, such as job description.

e. Objectives of training and suggested methods of ensuring adequate training.

f. Methods to be used, such as classroom lecture, live demonstrations, hands-on, etc.

g. Media to be used, such a slides, hand-outs, etc.

h. Training equipment required, such as projector, projection screen, etc., to be provided by Contractor.

C. Training Manuals: Provide training manual for each attendee; allow for minimum of two attendees per training session.

1. Include applicable portion of O&M manuals.

2. Include copies of all hand-outs, slides, overheads, video presentations, etc., that are not included in O&M manuals.

3. Provide one extra copy of each training manual to be included with operation and maintenance data.

D. Training Reports:

1. Identification of each training session, date, time, and duration.

2. Sign-in sheet showing names and job titles of attendees.

3. List of attendee questions and written answers given, including copies of and references to supporting documentation required for clarification; include answers to questions that could not be answered in original training session.

4. Include Commissioning Authority's formal acceptance of training session.

E. Video Recordings: Submit digital video recording of each demonstration and training session for Owner's subsequent use.

1. Format: DVD Disc.

2. Label each disc and container with session identification and date.

1.04 QUALITY ASSURANCE

A. Instructor Qualifications: Familiar with design, operation, maintenance and troubleshooting of the relevant products and systems.

1. Provide as instructors the most qualified trainer of those contractors and/or installers who actually supplied and installed the systems and equipment.

2. Where a single person is not familiar with all aspects, provide specialists with necessary qualifications.

PART 2 PRODUCTS - NOT USED

PART 3 EXECUTION

3.01 DEMONSTRATION - GENERAL

A. Demonstrations conducted during system start-up do not qualify as demonstrations for the purposes of this section, unless approved in advance by Owner.

B. Demonstrations conducted during Functional Testing need not be repeated unless Owner personnel training is specified.

C. Demonstration may be combined with Owner personnel training if applicable.

D. Operating Equipment and Systems: Demonstrate operation in all modes, including start-up, shut-down, seasonal changeover, emergency conditions, and troubleshooting, and maintenance procedures, including scheduled and preventive maintenance.

1. Perform demonstrations not less than two weeks prior to Substantial Completion.

2. For equipment or systems requiring seasonal operation, perform demonstration for other season within six months.

E. Non-Operating Products: Demonstrate cleaning, scheduled and preventive maintenance, and repair procedures.

1. Perform demonstrations not less than two weeks prior to Substantial Completion.

3.02 TRAINING - GENERAL

A. Commissioning Authority will prepare the Training Plan based on draft plans submitted.

B. Conduct training on-site unless otherwise indicated.

C. Owner will provide classroom and seating at no cost to Contractor.

D. Do not start training until Functional Testing is complete, unless otherwise specified or approved by the Commissioning Authority.

E. Provide training in minimum two hour segments.

F. The Commissioning Authority is responsible for determining that the training was satisfactorily completed and will provide approval forms.

G. Training schedule will be subject to availability of Owner's personnel to be trained; re-schedule training sessions as required by Owner; once schedule has been approved by Owner failure to conduct sessions according to schedule will be cause for Owner to charge Contractor for personnel "show-up" time.

H. Review of Facility Policy on Operation and Maintenance Data: During training discuss:

1. The location of the O&M manuals and procedures for use and preservation; backup copies.

2. Typical contents and organization of all manuals, including explanatory information, system narratives, and product specific information.

3. Typical uses of the O&M manuals.

I. Product- and System-Specific Training:

1. Review the applicable O&M manuals.

2. For systems, provide an overview of system operation, design parameters and constraints, and operational strategies.

3. Review instructions for proper operation in all modes, including start-up, shut-down, seasonal changeover and emergency procedures, and for maintenance, including preventative maintenance.

4. Provide hands-on training on all operational modes possible and preventive maintenance.

5. Emphasize safe and proper operating requirements; discuss relevant health and safety issues and emergency procedures.

6. Discuss common troubleshooting problems and solutions.

7. Discuss any peculiarities of equipment installation or operation.

8. Discuss warranties and guarantees, including procedures necessary to avoid voiding coverage.

9. Review recommended tools and spare parts inventory suggestions of manufacturers.

10. Review spare parts and tools required to be furnished by Contractor.

11. Review spare parts suppliers and sources and procurement procedures.

J. Be prepared to answer questions raised by training attendees; if unable to answer during training session, provide written response within three days.

END OF SECTION

SECTION 23 0500
HVAC MATERIALS AND METHODS

PART 1 GENERAL

1.01 DESCRIPTION

A. The provisions of the General Requirements, Supplementary Requirements, and Division 1 apply to the HVAC work specified in this Division.

B. The requirements of this Section apply to the HVAC systems specified in these Specifications and in other Division 23 sections.

C. Provide all items, articles, materials, equipment, operations and/or methods listed, mentioned, shown and/or scheduled on the Drawings and/or in these Specifications, including all labor, supervision, services, permits, fees, and incidentals necessary and required to provide a complete and operable facility with complete systems as shown, specified, and required by applicable codes.

D. The work shall include, but not be limited to, the following systems:

1. Central heating and cooling equipment.
2. Complete piping systems including insulation, valves, supports, etc.
3. Air handling equipment including air handlers and exhaust fans.
4. Air distribution systems including ductwork, terminal units, dampers, insulation, and air inlets and outlets.
5. HVAC control system.
6. Assist Commissioning Agent as required by Commissioning specification.

E. Advise subcontractor, suppliers, and vendors involved in the work specified in this Section of the applicable requirements.

F. See 23 0800 for Commissioning and additional requirements.

1.02 QUALITY ASSURANCE

A. All work and materials shall conform to all applicable local and state codes and all federal, state and other applicable laws and regulations. All clarifications and modifications which have been cleared with appropriate authorities are listed under the applicable sections. All electrical products shall bear the label of a recognized testing laboratory such as UL or CSA.

B. Whenever the requirements of the Specifications or Drawings exceed those of the applicable code or standard, the requirements of the Specifications and Drawings shall govern.

C. Codes and Standards: Comply with the provisions of the following referenced codes, standards and specifications:

1. Federal Specifications (FS)
2. American National Standards Institute (ANSI)
3. National Electrical Manufacturer's Association (NEMA)
4. National Fire Protection Association (NFPA)
5. Underwriters Laboratories, Inc. (UL)
6. Factory Mutual (FM)
7. International Building Code (IBC) with State and Local Amendments
8. International Mechanical Code (IMC) with State and Local Amendments
9. Uniform Plumbing Code (UPC) with State and Local Amendments
10. American Society for Testing and Materials (ASTM)
11. Americans with Disabilities Act (ADA)
12. International Fire Code (IFC) with State and Local Amendments
13. Energy Policy Act (EPAct)
14. Manufacturers Standardization Society (MSS)
15. American Gas Association (AGA)

D. Each piece of equipment furnished shall meet all detailed requirements of the Drawings and Specifications and shall be suitable for the installation shown. Equipment not meeting all requirements will not be acceptable, even though specified by name. Where two or more units of the same class of equipment are furnished, use product of the same manufacturer; component parts of the entire system need not be products of same manufacturer. Furnish all materials and equipment, new and free from defect and of size, make, type and quality herein specified or approved by the Architect. All materials shall be installed in a neat and professional manner.

E. All apparatus shall be built and installed to deliver its full rated capacity at the efficiency for which it was designed.

F. The Drawings and Specifications are complementary. What is called for by one shall be as though called for by both.

G. Drawings: Do not scale drawings for roughing-in measurements, nor use as shop drawings. Make field measurements and prepare shop drawings. Coordinate work with shop drawings of other specification divisions. See Article 3.1 for more information and requirements.

H. Field Wiring: It is the intent of these specifications that all systems shall be complete and operable. Refer to all drawings and specifications, especially the electrical drawings, to determine voltage, phase, circuit ampacity and number of connections provided. Provide all necessary field wiring and devices from the point of connection indicated on the electrical drawings. All equipment shall be installed in compliance with the Electrical Code and the equipment's UL listing. Bring to the attention of the

Architect in writing, all conflicts, incompatibilities, and/or discrepancies prior to bid or as soon as discovered.

1.03 WORK OF OTHER CONTRACTS

A. Work under this contract shall be conducted in a manner to allow for the future installations of such equipment or items listed in other sections of this Specification.

1.04 WORK OF OTHER DIVISIONS

A. Work under this Division shall be conducted in a manner to cooperate with the installation of such equipment or items as specified in other Divisions.

B. Plumbing piping systems and fixtures and fire suppression piping systems are specified under other Divisions of these Specifications except for provisions or items specifically noted on the Drawings or specified herein.

C. Consult all Drawings and Specifications in this project and become familiar with all equipment to be installed. Coordinate all aspects of the construction with the other trades on the job to ensure that all work and materials required to provide a complete and operational facility are included in the bid.

D. All sections of Division 23 are interrelated and shall be considered in their entirety when interpreting any material, method, or direction listed in any section of Division 23. Individual sections are not written for specific Subcontractors or suppliers but for the General Contractor.

1.05 SHOP DRAWINGS, PRODUCT DATA, AND SAMPLES (SUBMITTALS)

A. Submit in accordance with Division 1 full technical and descriptive shop drawing data on proposed materials and equipment as detailed in each section.

B. The Contractor shall verify that all equipment submitted can be delivered and installed within the time constraints of the construction period.

C. Include the manufacturer, type, style, catalog number, complete specification, certified dimensions, and description of physical appearance for each item and option submitted. Reproduction of catalog data sheets shall be clean and legible to show all details, including gauge of metal used.

D. Include only information on exact equipment to be installed, not general catalogs of the manufacturer. Where sheets show proposed equipment as well as other equipment, identify proposed equipment with rubber stamp arrow or similar concise method.

E. Submit with each copy a transmittal letter verifying that all included equipment submittals have been carefully considered for quality, dimensions, function, and have been coordinated with the Drawings and Specifications. Guarantee that proposed materials will meet or exceed the quality and function of those specified.

F. Include field wiring diagrams and connection diagrams for all control and/or low voltage systems, including floor plans.

G. Submittal Review: The submittal review process is a means to provide quality control. The action noted to be taken (or where conflicts with the contract documents are not noted) shall not be interpreted by the Contractor as automatic "change orders." Approval of the data for substitution and shop drawings shall not eliminate the Contractor's responsibility for compliance with Drawings or Specifications, nor shall it eliminate the responsibility for freedom from errors of any sort in the data discovered prior to or after the review process. Deviations, discrepancies, and conflicts between the submittals and the Contract Documents shall be called to the Architect's attention in writing at the time of transmittal of the data.

H. Submittals shall be in the form of PDF documents. Arrange submittals numerically with specification sections identified in tabs. All required sections shall be submitted at one time. **Partial submittals will be rejected without review.**

I. For adhesives and sealants used on the interior of the building (inside the waterproofing system), include printed statement of volatile organic compound (VOC) content.

1.06 PRODUCT SUBSTITUTION

A. Materials other than those specified may be approved for this project providing a written request is submitted to the Architect prior to bid in accordance with Instructions to Bidders. Requests shall include complete specifications, dimensions, manufacturer and catalog number for each item for which approval is desired. If, in the opinion of the Architect, the material is not complete or if it is not an acceptable substitute, he may reject it. The Architect's evaluation will be based solely on the material submitted.

1.07 CHANGE ORDERS

A. All supplemental cost proposals by the Contractor shall be accompanied by a complete itemized breakdown of labor and materials without exception. At the Architect's request, the Contractor's estimating sheets for the supplemental cost proposals shall be made available to the Architect. Labor must be separated and allocated for each item of work.

1.08 RECORD DOCUMENTS

A. Project Record (As-Installed) Drawings:

1. Maintain a set of record drawings on the job site as directed in Division 1.
2. Keep Drawings clean, undamaged, and up to date.
3. Record and accurately indicate the following:
   a. Depths, sizes, and locations of all buried and concealed piping dimensioned from permanent building features.
   b. Locations of all valves with assigned tag numbers.
   c. Locations of all fire dampers and other airflow control devices.

d. Changes, additions, and revisions due to change orders, obstructions, etc. Eradicate extraneous information.

e. Model numbers of installed equipment.

4. Make Drawings available when requested by Architect for review.

5. Submit as part of the required Project Closeout documents. Final submittal will be in the form of reproducible drawings.

6. Quality of entire set of project record drawings to match the quality of the contract documents; quality to be judged by Architect. Computer-aided design drafting (CADD) shall be used to complete project record drawings. Use standards set in contract documents. Note field modifications, all addenda, and change order items on project record drawings. If deficiencies are found in either the quality or the accuracy of the drawings, they will be returned unapproved. Additional review of subsequent submissions shall be at the Contractor's expense.

B. Operating and Maintenance Manuals: Submit Operating and Maintenance Instructions, including manufacturer's service data, wiring diagrams, and parts lists and vendors for all serviceable items of equipment, valve charts, balancing data, final control diagrams showing final set points, duct and piping pressure test reports, equipment startup records, and any additional equipment added by change order. Provide any performance curves, data, and model numbers from submittals. Comply with provisions of Division one where applicable to the mechanical work. Submittal shall be in the form of a PDF file per specification section. Arrange submittals numerically with equipment type or classification identified in tabs. Manufactures O&M manuals shall be provided as a single PDF file that can be hyper-linked by Owner for reference. O&M manuals that are a series of PDF files will not be accepted.

1.09 WARRANTY

A. Furnish, prior to application for final payment, three copies of written and signed guarantee effective a period of one year from date of completion and acceptance of entire project; agree to correct, repair and/or replace defective materials and/or equipment or the results of defective workmanship without additional expense to the Owner. Where no response satisfactory to the Owner has occurred within three working days from the written report of a warranty covered defect, the contractor shall agree to pay for the cost of repair of the reported defect by a contractor of the Owner's choice.

B. Where the manufacturer's guarantee exceeds one year, the longer guarantee shall govern and include the Contractor's labor.

PART 2 PRODUCTS

2.01 GENERAL

A. General: Provide all new materials and equipment, identical to apparatus or equipment in successful operation for a minimum of two years. Provide materials of comparable

quality omitted here but necessary to complete the work. Maximum allowable variation from stated capacities, minus 5% to plus 10% as approved in each case.

B. Compatibility: Provide products which are compatible with other portions of the work and provide products with the proper or correct power and fuel-burning characteristics, and similar adaptations for the project.

C. Efficiency: Heating and cooling equipment shall comply with ASHRAE Standard 90.1-2019 and the State Energy Code. Where equipment efficiencies are indicated, the use of alternate or substitute manufacturer's equipment with lower efficiencies is not permitted.

D. Storage and Handling:
   1. Delivery: Deliver to project site with manufacturer's labels intact and legible.
   2. Handling: Avoid damage.
   3. Storage: Inside protected from weather, dirt and construction dust. Where necessary to store outside, elevate well above grade and enclose with durable, waterproof wrapping.

2.02 STARTERS AND SWITCHES

A. Manufacturers: Cerus Industrial Model numbers are listed. General Electric, ABB, Allen Bradley, Schneider Electric, Eaton, are approved if equal. Provide starters by same manufacturer throughout project.

B. General: Provide each motor with starter or switch as approved and recommended by manufacturer of motor or equipment of which motor is a part. All starters shall include integral disconnect.

C. System Description
   1. Single Phase Starter: Starters for 115VAC single phase motors less than 1 HP shall be capable of both manual and automatic operation. Refer to Section D for single phase starter requirements.
   2. Magnetic Starters: Starters for 3-phase motors shall be magnetic starters. Refer to Section E for magnetic starter requirements.

D. Enclosed Full Voltage Non-Reversing (FVNR) Single Phase Starter
   1. Single Phase Motor Starter Control: The single phase motor starter shall consist of a manually operated quick-make toggle mechanism lockable in the "Off" position which shall also function as the motor disconnect. Additionally, the starter shall provide thermal overload protection, run status pilot light and fault pilot light. The starter must include the capability to operate in both manual and automatic control modes. In automatic mode, the starter shall have the capability to integrate with a building automation system by providing terminals for run input, run status output and fault output. All control terminals shall be integrated in the starter. At a minimum, each single phase starter shall include

an interposing run relay and current sensing status output relay. Single phase motor starter shall be in a surface mount enclosure.

2. Approved manufacturer: Cerus Industrial, model BAS-1P or approved equal.

E. Enclosed Full Voltage Non-Reversing (FVNR) Non-Combination Starter

1. Magnetic Motor Starters shall be enclosed in a general purpose electrical enclosure with the appropriate environmental rating.
2. Starters shall consist of a horsepower rated magnetic contactor with a minimum of 1NO and 1NC auxiliary contacts and solid state electronic overload relay. Overload relay shall protect all three phases with a wide range current setting and trip class to allow field adjustment for specific motor FLA. Overload relay shall provide phase failure, phase loss, locked rotor and stall protection.
3. Provide a manual reset pushbutton on the starter cover to restore normal operation after a trip or fault condition.
4. Each starter shall include an installed 50VA control power transformer (CPT) with protected secondary. The CPT must accept the available line voltage and the control voltage shall not exceed 120V.
5. Installed accessories shall include Hand-Off-Auto operation switch with 22mm style operator interfaces. Include LED pilot light indicators for Hand, Off, Auto, Run and Overload conditions. All pilot devices shall be water tight and dust tight.
6. When remotely controlled by an automation system, the starter shall include remote run terminals which accept both a voltage input signal and a contact closure. The voltage run input shall accept both AC and DC signals including 24VAC, 120VAC, 24VDC and 48VDC to allow direct connection of the transistorized automation signal to the starter.
7. In applications where the motor is interlocked with a damper or valve, the actuator control must reside within the starter enclosure. The starter must provide a voltage output to operate the actuator to open the damper or valve without closing the motor circuit. The starter will only close the motor circuit and start the motor after it has received a contact closure from a limit or end switch confirming the damper or valve position.
8. Manufacturer shall provide and install tags with engraved white lettering to designate equipment served.

F. Enclosed Full Voltage Non-Reversing (FVNR) Combination Starter / Disconnect

1. Magnetic Motor Starters shall be enclosed in a general purpose electrical enclosure with the appropriate environmental rating.
2. Starters shall consist of a horsepower rated magnetic contactor with a minimum of 1NO and 1NC auxiliary contacts and solid state electronic overload relay. Overload relay shall protect all three phases with a wide range current setting and trip class to allow field adjustment for specific motor FLA. Overload relay shall provide phase failure, phase loss, locked rotor and stall protection.
3. Provide a manual reset pushbutton on the starter cover to restore normal operation after a trip or fault condition.

4. Each starter shall include an installed 50VA control power transformer (CPT) with protected secondary. The CPT must accept the available line voltage and the control voltage shall not exceed 120V.
5. Installed accessories shall include Hand-Off-Auto operation switch with 22mm style operator interfaces. Include LED pilot light indicators for Hand, Off, Auto, Run and Overload conditions. All pilot devices shall be water tight and dust tight.
6. When remotely controlled by an automation system, the starter shall include remote run terminals which accept both a voltage input signal and a contact closure. The voltage run input shall accept both AC and DC signals including 24VAC, 120VAC, 24VDC and 48VDC to allow direct connection of the transistorized automation signal to the starter.
7. In applications where the motor is interlocked with a damper or valve, the actuator control must reside within the starter enclosure. The starter must provide a voltage output to operate the actuator to open the damper or valve without closing the motor circuit. The starter will only close the motor circuit and start the motor after it has received a contact closure from a limit or end switch confirming the damper or valve position.
8. Provide and install tags with engraved white lettering to designate equipment served.
9. Enclosed combination starters shall include all of the magnetic starter requirements in addition to a disconnecting method. Acceptable disconnects include: motor circuit protectors or UL 489 circuit breakers. All disconnects shall include a lock-out mechanism when in the off position.
10. The Motor Circuit protector shall be a UL listed 508 current limiting manual motor starter with magnetic trip elements only. The breaker shall carry a UL 508F rating (up to 100A frame size) which provides for coordinated short circuit rating for use with the motor contactor and provides a minimum interrupting rating of 30,000 AIC for the combination starter.
11. Disconnect shall be UL 98 suitable for service entrance protection.
12. UL 489 breaker shall include thermal and magnetic trip mechanisms.
13. Provide over/under voltage and phase monitoring capability. Monitor shall be field adjustable for both over and under voltage levels and a delay time before returning to normal operation after a trip.

G. Quality Assurance
1. Manufacturer shall provide a five year warranty on the complete starter assembly.
2. The starter assembly shall be UL listed under UL 508A.

2.03 SOLID-STATE, VARIABLE-SPEED MOTOR CONTROLLERS

A. General: Controllers listed and labeled as a complete unit and arranged to provide variable speed of a standard NEMA Design B 3-phase induction motor by adjusting output voltage and frequency of controller. Designed and rated by the manufacturer for

the type of load (e.g., fans, blowers, and pumps) used and also approved by the manufacturer for the type of connection used between the motor and load (direct connection or power transmission connection).

B. Input Line Reactors: 5% for reduction of harmonics.

C. Output Line Reactors: Specially designed and constructed for IGBT controllers and designed to protect motor from voltage spikes over 150% of the bus voltage. Required where controller to motor cable length exceeds 50 feet. Provide dV/dT filters for 460 volt motors with cable lengths in excess of 300'.

D. In lieu of providing line reactors, the drive manufacturers may submit a power system analysis demonstrating compliance with IEEE 519.

E. Ratings:
1. Output Ratings: 3-phase, 6 to 60 Hz, with voltage proportional to frequency throughout the voltage range.
2. Starting Torque: 100 percent of rated torque, or as indicated.
3. Speed Regulation: Plus or minus 1 percent.
4. Ambient Temperature: 0° C to 40° C.
5. Efficiency: 98 percent at normal power levels.

F. Isolated Control Interface: Allow the controller to follow one of the following over an 11:1 speed range:
1. Electrical Signal: 4 to 20 milliamperes at 24 V.

G. Internal Adjustability: Provide the following internal adjustment capabilities:
1. Minimum Speed: 5 to 25 percent of maximum RPM.
2. Maximum Speed: 80 to 100 percent of maximum RPM.
3. Acceleration: 2 to 22 seconds.
4. Deceleration: 2 to 22 seconds.
5. Current Limit: 50 to 110 percent of maximum rating.

H. Self-Protection and Reliability Features:
1. Input transient protection by means of surge suppressors.
2. Snubber networks to protect against malfunction due to system voltage transients.
3. Motor Overload Relay: Adjustable and capable of NEMA class 10 performance.
4. Notch filter to prevent operation of the controller-motor-load combination at a natural frequency of the combination.
5. Instantaneous Overcurrent Trip.
6. Loss of Phase Protection.
7. Reverse Phase Protection.

8. Under- and Over-Voltage Trips.
9. Overtemperature Trip.
10. Short Circuit Protection.

I. Automatic Reset/Restart: Attempt three restarts after controller fault or on return of power to the system following an interruption and before shutting down for manual reset or fault correction. Provide for restarting during deceleration without damage to the controller, motor, or load.

J. Serial Communications: The VFD shall have an EIA-485 port as standard. The standard protocols shall be Modbus and BACnet MS/TP. The use of third party gateways and multiplexers is not acceptable. All protocols shall be certified by the governing authority (i.e. BTL Listing for BACnet).

K. EMI / RFI filters: All VFDs shall include onboard EMI/RFI filters. The onboard filters shall allow the entire VFD assembly to be CE Marked and the VFD shall meet product standard EN61800-3 for the First Environment restricted. No Exceptions.

L. Operation and Maintenance Features: Include:
1. Status Lights: Door-mounted LED indicators to indicate power on, run, overvoltage, line fault, overcurrent, and external fault.
2. Elapsed Time Meter.
3. Panel-Mounted Operator Station: Start-stop and auto-manual selector switches with manual speed control potentiometer.
4. Current-Voltage-Frequency Indicating Devices: Mount meters or digital readout device and selector switch flush in controller door and connect to indicate controller output.
5. Provide with non-fused disconnect rated for drive capacity. Disconnect shall be UL 98 suitable for service entrance.

M. For drives to be mounted outside install in a NEMA 3R enclosure with ventilation fan to control cabinet temperature below 135ºF.

N. Acceptable Manufacturers: Subject to compliance with requirements.
1. ABB Power Distribution, Inc.

2.04 ACCESS PANELS

A. Manufacturers: Inryco/Milcor, Bilco, Elmdor, Karp, Potter-Roemer or accepted substitute. Inryco/Milcor Style DW, K, or M panels as required by construction.

B. Construction: Flush style, fire rated in fire rated partitions and ceilings. Provide flush key cylinder locks on all access panels less than 8' above the floor in public spaces. Turn keys over to Owner at project completion. Screwdriver latches on all others.

C. Floor Access Doors:

1. Provided with recessed pan to receive floor material to match adjacent.
2. Frame shall be 1/4" extruded aluminum with built-in neoprene cushion and continuous anchor flange.
3. Door shall be 1/4" aluminum plate reinforced with aluminum stiffeners as required.
4. Stainless steel hinges shall be bolted to underside and pivot on torsion bars that counterbalance the door for easy operation.
5. Door shall open 90 degrees and lock automatically in that positon. A vinyl grip handle shall be provided to release the cover for closing.
6. Door shall be built to withstand a live load of 150 lbs per sq. ft. and equipped with a cylinder lock and threaded cover plug.
7. Aluminum shall be mill finish.
8. Installation shall be in accordance with manufacturer's instructions.
9. Manufacturer shall guarantee against defects in material or workmanship for a period of five years.
10. Bilco Type TER or approved.

2.05 EXPANSION JOINTS AND LOOPS

A. Flexible Expansion/Seismic Loop: Factory fabricated assembly consisting of two 90 degree elbows, two lengths of flexible hose, and a 180 degree return bend to allow free movement in three axis. Return bend shall include attachment point for support and a drain/vent fitting. Hose shall be corrugated metal style with metal overbraid. Connections to match piping system except connection 2" and larger shall be flanged style. Metraflex "Metraloop."

2.06 METERS AND GAUGES

A. General: Install meters and gauges where shown on the plans or specified elsewhere in these specifications.

B. Pressure-Temperature Test Plugs:
1. ¼" or ½" NPT fitting of solid brass capable of receiving either an 1/8" OD pressure or temperature probe and rated for zero leakage from vacuum to 1000 psig. Neoprene valve core for temperatures to 200 deg. F., Nordel to 350 deg. F.
2. Provide for each test plug a pressure gauge adapter with 1/16" or 1/8" OD pressure probe.
3. Furnish a test kit containing one 2-1/2" dial pressure test gauge of suitable range, one gauge adapter with 1/16" or 1/8" OD probe and two 5" stem pocket test thermometers – one 0 to 220 degrees F and one 50 to 550 degrees F. Turn the kit over to the Architect.
4. Cisco "P/T Plugs," Peterson "Pete's Plug" or approved substitute.

C. Thermometers: Liquid-in-glass, adjustable stem, separable sockets, plus 40 to 240 degrees F range (unless indicated otherwise). Weiss numbers are listed. Equivalent Taylor, Trerice, Weksler or approved substitute.

1. Wide case (9”) in equipment rooms and all major equipment items. Weiss “9VS” Series.
2. Narrow case (7”) in all other locations. Weiss “7VS” Series.

D. Pressure Gauges: Install on suction and discharge of all pumps and where shown on Drawings 4-1/2” dial, 0-100 psig graduation pressure gauges with Ashcroft No. 1106 pulsation dampers and stop cocks. Weiss UGE-1 or equivalent Ashcroft, Marsh, Trerice, Weksler.

2.07 VALVES

A. General: Provide factory fabricated valves of the type, body material, temperature and pressure class, and service indicated. Bronze gate, globe and check valves shall comply with MSS-SP-80. Ball valves shall comply with MSS-SP-110. Iron gate and globe valves shall comply with MSS-SP-70. Iron check valves shall comply with MSS-SP-71. Butterfly valves shall comply with MSS-SP-67. Valve size same as connecting pipe size.

B. Acceptable Manufacturers: Milwaukee, Crane, Grinnell, Nibco, Hammond, Stockham, Legend, Watts, and Walworth. Grooved end valves Victaulic, Gruvlock, or accepted substitute. NIBCO numbers are given except as noted. Where possible, provide valves from a single manufacturer.

C. Valve Styles: See individual Division 23 sections for valve styles.

D. Butterfly Valve Operators: Locking lever for shut-off service; “Memory Stop” for lever handle with 10-position throttling plate for throttling service; gear operator with babbitt sprocket rim for chain-operated valves and gear operators on all 8” or larger valves.

E. Butterfly Valve Style: Lug-type with cap screws for all valves utilized for equipment isolation for servicing. Lug and grooved style valves shall be capable for use as isolation valves and recommended by manufacturer for dead-end service at full system pressure.

F. Insulated Valves: Install extended-stem valves in all piping specified as insulated, and arrange in the proper manner to receive insulation.

G. Mechanical Actuators: Provide mechanical actuators with chain operators where indicated, where valves 4" and larger are mounted more than 7' above the floor, and where manual operation is difficult because of valve size, pressure differential or other operating conditions. Drop chains to 6'-6" above the floor.

H. Selection of Valve Ends (Pipe Connections): Select and install valves with ends matching the types of pipe/tube connections.

2.08 HANGERS AND SUPPORTS

A. General: Provide factory-fabricated horizontal piping hangers, clamps, hanger rod, inserts, supports, etc., of the indicated MSS type and size. The Manufacturers

Standardization Society (MSS) of the Valve and Fittings Industry Practice SP-58 and SP-69 are referenced in this section.

B. Manufacturers: B-Line, Carpenter & Paterson, Grinnell, Michigan, Superstrut, Tolco, Erico, or accepted substitute. Grinnell figure numbers in parentheses where applicable (or other manufacturers as noted).

C. Corrosion Protection: Provide materials which are zinc plated or factory painted to prevent corrosion. Prevent electrolysis in the support of copper tubing by the use of copper hangers (copper coated alone is not sufficient), strut cushion, or at least two layers of UPC 10 mil tape.

D. Seismic Requirements: Provide seismic restraints in accordance with OSSC Section 1613. Design restraint systems in accordance with "Seismic Restraint Manual: Guidelines for Mechanical Systems," Second Edition, 1998, SMACNA, or “A Practical Guide to Seismic Restraint” ASHRAE RP-812, 1999.

E. Horizontal Piping Hangers and Supports:

1. Adjustable Clevis Hanger: MSS Type 1 (Fig. 260).
2. Adjustable Band Hanger: MSS Type 7 (Fig. 97), fabricated from steel.
3. Adjustable Swivel-Band Hanger: MSS Type 10 (Fig. 70).
4. Clamp: MSS Type 4 (Fig. 212, 216).
5. Double-Bolt Clamp: MSS Type 3 (Fig. 295A, 295H), including pipe spacers.
6. Adjustable Saddle-Support: MSS Type 36 (Fig. 258) and MSS Type 37 (Fig. 259), including saddle, pipe and reducer. Fabricate base-support from steel pipe and include cast-iron flange or welded-steel plate.
7. Channel Support System: Galvanized, 12 gauge channel and bracket support systems, single or double channel as indicated on the Drawings or as required by piping and equipment weights. Grinnell "Power Strut" channel. Acceptable Manufacturers: Super Strut, Globestrut, Bee, Kindorf or Unistrut.

F. Vertical Pipe Clamps:

1. Two-Bolt Riser Clamp: MSS Type 8 (Fig. 261).
2. Four-Bolt Riser Clamp: MSS Type 42 include pipe spacers at inner bolt-holes.

G. Hanger Attachment:

1. Hanger Rod: Rolled threads, zinc plated. Right hand threaded.
2. Turnbuckles: MSS Type 13 (Fig. 230).
3. Weldless Eye-Nut: MSS Type 17 (Fig. 290).
4. Malleable Eye-Socket: MSS Type 16 (Fig. 110R).
5. Clevises: MSS Type 14 (Fig. 299).

H. Building Attachments:

1. Concrete Inserts: MSS Type 18 (Fig. 282), steel or Grinnell Power-Strut PS349 continuous channel. Acceptable Manufacturers: Michigan Hanger, Globestrut, Unistrut, Super Strut.
2. Clamps: MSS Type 19 (Fig. 285, 281), Type 20, 21 (Fig. 225, 226, 131), Type 23 (Fig. 86, 87, 88), Type 25 (Fig. 227), Type 27 through 30 where applicable.

2.09 IDENTIFICATION MARKERS

A. Pipe Markers:
1. Adhesive pipe markers of width, letter size and background color conforming to ANSI A13.1.
2. Acceptable Manufacturers: Brady B946 with arrow banding tape or similar Seaton, Zeston, MSI.

B. Duct Markers:
1. Adhesive duct markers 2¼”x14” with black text indicating contents on white background with directional flow arrow.
2. Acceptable Manufacturers: Brady B946 or similar Seaton, Zeston, MSI.

C. Nameplates:
1. Engraved nameplates, 1/16" thick, laminated 2-ply plastic, bottom ply white, outer ply black, letters formed by exposing bottom ply.
2. Size: 2" by 4" nameplates with 1/4" high letters.

D. Valve Tags:
1. 2" diameter, 18-gauge polished brass tags with 3/16" chain hole and 1/4" high stamped, black-filled service designation.
2. Acceptable Manufacturers: Seaton, Brady, MSI.

E. Valve Identification: Tag all valves with brass disc and chain. Prepare valve charts indicating valve number, size, location, concealed or exposed, function, valve manufacture and model number, and normal position. Provide floor plan as part of record Drawings. Use no duplicate numbers in Plumbing and Heating systems. Mount glazed frames containing one set of valve charts in the building mechanical room.
1. Include floor plan of each floor level with valve tag numbers indicated at approximate valve locations. Provide separate maps for plumbing valves and HVAC valves. Maps are to be 11"x17".
2. Label all ceilings directly below or access panels directly in front of plumbing or HVAC valves using engraved, printed labels or hanging tags stating the valve ID as shown on the Valve Map and the Valve Tag Directory.

2.10 PENETRATION FIRE STOPPING

A. Through-penetration fire stopping system tested and listed by Underwriters Laboratories. 3M, Metacaulk, SpecSeal, or approved.

B. Select system for proper application based on wall construction, type of penetrating item, wall rating, etc.

C. Sealants and Primers – General: Provide only products having lower volatile organic compound (VOC) content than required by South Coast Air Quality Management District Rule No. 1168.

2.11 PENETRATION AT ACOUSTICAL PROTECTION WALLS

A. See details on Drawings.

B. Materials:

1. Sealants and Primers - General: Provide only products having lower volatile organic compound (VOC) content than required by South Coast Air Quality Management District Rule No. 1168.
   a. Architectural Sealants: 250 g/L.
   b. Sealant Primers for Porous Substrates: 775 g/L.
   c. Sealant Primers for Porous Substrates: 775 g/L.
2. Acoustical Joint Sealant: Manufacturer's standard nonsag, paintable, nonstaining latex sealant complying with ASTM C 834. Product effectively reduces airborne sound transmission through perimeter joints and openings in building construction as demonstrated by testing representative assemblies according to ASTM E 90.
   a. Products:
      1) Pecora Corporation; AC-20 FTR.
      2) Tremco Incorporated; Tremflex 834.
      3) USG Corporation; SHEETROCK Acoustical Sealant.
3. Joint Backing: Round, closed cell, non-gassing foam rod compatible with sealant; ASTM C 1330 Type B, cylindrical, bi-cellular material; oversized 30 to 50 percent larger than joint width.
   a. Products:
      1) Sof Rod manufactured by Nomaco Inc.
      2) Sonolastic Soft Backer-Rod manufactured by BASF.
4. Sealants and Primers - General: Provide only products having lower volatile organic compound (VOC content than require by South Coast Air Quality Management District Rule No. 1168.

2.02 MOTORS

A. General: Motors shall conform to UL, CSA, and NEMA MG-1 and bear a permanently attached nameplate indicating compliance and motor characteristics. Provide motors meeting UL 507 standard where applicable.

B. Manufacturers: Baldor is approved.

C. Temperature Rating: Class F insulation, except where otherwise indicated or required for service indicated.

D. Starting Capability: As required for service indicated, but not less than 5 starts per hour.

E. Phases and Current: See drawings

F. Service Factor: 1.15 for polyphase; 1.25 for single-phase.

G. Construction: General purpose, continuous duty; NEMA design "B," except "C" for high starting torque applications or as need be to match current motor being replaced.

H. Frames: For single phase motor sizes NEMA No. 48, except 56 for heavy-duty applications. NEMA "T" frames for 1 horsepower and larger polyphase motors. Special frame types as required for close coupled pumps and similar applications.

I. Bearings: Ball or roller, and design for thrust where applicable; double shielded and regreasable, except provide permanently sealed where not accessible for greasing. Sleeve-type bearings permitted only where indicated for fractional (1/6 hp or less) horsepower motors with direct drive loads. Minimum L-10 bearing life of 40,000 hours when used with minimum pitch sheaves per NEMA Table 14-1.

J. Enclosure Type: Unless otherwise indicated, open drip-proof for normal concealed indoor use, guarded where exposed to employees or occupants. Type II for outdoor use, except weather-protected Type I where adequately housed. Totally enclosed where explosion proof motors are required.

K. Overload Protection: Built-in thermal with internal sensing device for stopping motor, and for signaling where indicated on single phase motors.

L. Speed: Match existing motor being replaced.

M. Efficiency: The manufacturer's highest (premium) efficiency motors tested under procedures recommended by NEMA MG-1 (IEEE Standard 112, Test Method B). Intermittent duty motors, operating less than 6 hours per day, shall comply with EPAct standards. Submit manufacturer's data if motor nameplate does not indicate minimum efficiency. Nominal full load efficiencies for 460 volt, 1,800 rpm motors:

HP	Efficiency %
1-1/2	87.5
2	87.5
3	88.5
5	89.5
7-1/2	91.5
10	91.5
15	93.0
20	93.5
25 and larger	94.0

PART 3 EXECUTION

3.01 LAYOUT AND COORDINATION

A. Site Examination: Before starting work, carefully examine site and all contract Drawings. Become thoroughly familiar with conditions governing work on this project. Verify all indicated elevations, building measurements, roughing-in dimensions and equipment locations before proceeding with any of the work.

B. Utility Locations: The location of existing utilities, wires, conduits, pipes, ducts, or other service facilities are shown in a general way only on the Drawings and are taken from existing records. Ascertain whether any additional facilities other than those shown on the plans may be present and determine the exact location and elevations of all utilities prior to commencing installation.

C. Sleeves, Inserts, Cast-in-Place Work: Provide sleeves, inserts, anchoring devices, cast-in-place work, etc. which must be set in concrete sequenced at the proper time for the project schedule.

D. Coordination:

1. The Drawings are based on equipment of a certain manufacturer and may be identified as such. Where alternate manufacturers or approved substitutes are incorporated into the work, any required design changes are the responsibility of the contractor. Such changes may include changes in utility or system connection sizes, location, or orientation, service clearances, structural support or acoustic considerations.
2. Prepare accurate AutoCAD shop drawings showing the actual physical dimensions required for the installation for duct work, piping and mechanical devices. Submit drawings prior to purchase/fabrication/installation of any of the elements involved in the coordination. Provide drawing files to other trades for coordination.
3. Cooperate with other trades in furnishing material and information for sleeves, bucks, chases, mountings, backing, foundations and wiring required for installation of mechanical items.
4. Coordinate all work with other trades and determine in advance where interfacing of the mechanical work and other work are required to be connected together. Provide all materials and equipment to make those connections. Submit shop drawings showing required connections where special conditions exist.

E. Discrepancies: Report immediately any error, conflict or discrepancy in Plans, Specifications and/or existing conditions. Do not proceed with any questionable items of work until clarification of same has been made. Should rearrangement or re-routing of piping be necessary, provide for approval the simplest layout possible for that particular portion of the work.

3.02 UTILITY COORDINATION

A. Utility Coordination: Coordinate all aspects of the incoming utility services indicated with the City Engineer, serving utility, and the off-street improvements Contractor. Requirements of the utility company which exceed the provisions made on the Drawings or covered by these Specifications shall take precedence. Provisions made on the Drawings or Specifications in excess of the utility company's requirements shall take precedence. No additional compensation will be allowed the Contractor for connection fees or additional work or equipment not covered in the Drawings or Specifications which are a result of policies of the serving utilities.

3.03 MECHANICAL EQUIPMENT WIRING

A. Provide all mechanical equipment motors, automatic temperature, limit, float and similar control devices required, with wiring complete from power source indicated on Electrical Drawings.

B. Provide properly rated motor overload and undervoltage protection and all manual or automatic motor operating devices for all mechanical equipment.

C. Equipment and systems shown on the Drawings and/or specified, are based upon requirements of specific manufacturers which are intended as somewhat typical of several makes which may be approved. Provide all field wiring and/or devices necessary for a complete and operable system including controls for the actual selected equipment/system.

D. Provide all starters for mechanical motors. Review Electrical Specifications and Drawings to determine starter sizes. Adjust fusing/time delay on all starters once installed.

3.04 GENERAL INSTALLATION

A. Locating and Positioning Equipment: Observe all Codes, Regulations and good common practice in locating and installing mechanical equipment and material so that completed installation presents the least possible hazard. Maintain adequate clearances for repair and service to all equipment and comply with Code requirements.

B. Arrangement: Arrange piping parallel with primary lines of the building construction, and with a minimum of 7' overhead clearance in all areas where possible. Unless indicated otherwise, conceal all piping. Locate operating and control equipment properly to provide easy access, and arrange entire mechanical work with adequate access for operation and maintenance. Give right-of-way to piping which must slope for drainage. Set all equipment level or as recommended by manufacturer. Under no conditions shall beams, girders, footings or columns be cut for mechanical items. Casting of pipes into concrete is prohibited unless so shown on Drawings.

C. Drip Pans: Provide drip pans under all above ceiling in-line pumps and cooling coils. Locate pan immediately below piping and equipment, and extend a minimum of 6" on each side and lengthwise 18" beyond equipment being protected. Fabricate pans 2" deep, of reinforced 20 gauge galvanized sheet metal with watertight seams and rolled or hemmed edges. Provide 3/4" drainage piping, properly discharged to over floor drain

or as shown on the Drawings. Comply with Mechanical Code for overflow protection and pipe sizing.

D. Access Panels: Provide access panels with proper backing reinforcement for all equipment, dielectric unions, valves and items requiring service and installed above ceilings, behind walls, or in furring, complete with correct frame for type of building construction involved. Exact size, number and location of access panels are not necessarily shown on Drawings. Use no panel smaller than 12" by 12" for simple manual access or smaller than 16" x 20" where personnel must pass through.

E. Adjusting: Adjust and calibrate all automatic mechanical equipment, temperature controls, float devices, etc. Adjust flow rates at each piece of equipment or fixture.

F. Building Vapor Barrier: Wherever the building insulation vapor barrier is penetrated by piping, hangers, conduits, etc., provide clear self-adhesive tape recommended by the insulation manufacturer around the penetrations.

G. Housekeeping Pads: Construct minimum 6” thick with chamfered edges using 3000 psi concrete. Provide #4 reinforcing bars 8” on center in each direction and within 4” of each edge, centered in pad thickness. Provide ½” dowel with 3” embedment into floor slab for each 2 square feet of pad area. Dowels and equipment anchor bolts shall be spaced a minimum of 6” from pad edges.

3.05 VALVE INSTALLATION

A. General: Comply with the following requirements:

1. Install valves where required for proper operation of piping and isolation of equipment, including valves in branch lines where necessary to isolate sections of piping, and where shown on the drawings. Install valves at low points in piping systems that must be drained for service or freeze protection.
2. Locate valves in accessible spaces (or behind access panels) and so that separate support can be provided when necessary.
3. Install valves with stems pointed up, in the vertical position where possible, but in no case with stems pointed downward from a horizontal plane.

B. Insulated Valves: Install extended-stem valves in all piping specified as insulated, and arrange in the proper manner to receive insulation.

C. Valve Access: Provide access panels to all valves installed behind walls, in furring or otherwise inaccessible.

3.06 INSTALLATION OF HANGERS AND SUPPORTS

A. General: Proceed with the installation of hangers, supports and anchors only after the required building structural work has been completed in areas where the work is to be installed. Correct inadequacies including (but not limited to) the proper placement of inserts, anchors and other building structural attachments.

1. Install hangers, supports, clamps, and attachments to support piping and equipment properly from the building structure. Use no wire or perforated metal to support piping, and no supports from other piping or equipment. For exposed continuous pipe runs, install hangers and supports of the same type and style as installed for adjacent similar piping.
2. Prevent electrolysis in the support of copper tubing use of at least 2 layers of UPC listed 10 mil tape at all bearing surfaces or strut clamp cushion. Copper plated hangers alone are not sufficient.
3. Arrange supports to prevent eccentric loading of joists and joist girders. Locate supports at panel points only.

B. Provisions for Movement:

1. Install hangers and supports to allow controlled movement of piping systems and to permit freedom of movement between pipe anchors, and to facilitate the action of expansion joints, expansion loops, expansion bends and similar units. Install specified seismic restraints to restrict excessive movement.
2. Install hangers and supports so that equipment and piping live and dead loading and stresses from movement will not be transmitted to connected equipment.
3. Install hangers and supports to provide the indicated pipe slopes, and so that maximum pipe deflections allowed by ANSI B31 are not exceeded. Comply with the following installation requirements:
   a. Clamps: Attach clamps, including spacers (if any), to piping outside the insulated piping support. Do not exceed pipe stresses allowed by ANSI B31.
   b. Insulated Pipe Supports: Insulated pipe supports shall be supplied and installed on all insulated pipe and tubing.
   c. Load Rating: All insulated pipe supports shall be load rated by the manufacturer based upon testing and analysis in conformance with ASME B31.1, MSS SP-58, MSS SP-69 and MSS SP-89.
   d. Support Type: Manufacturer's recommendations, hanger style and load shall determine support type.
   e. Insulated Piping Supports: Where insulated piping with continuous vapor barrier or where exposed to view in finished areas is specified, install hard maple wood insulation shields (Elcen Fig. 216) or steel pipe covering protection shields (MSS type 39) at each hanger.

C. Pipe Support:

1. Vertical Spacing: Support at base, at equivalent of every floor height (maximum 10' as required by Code) and just below roof line.
2. Screwed or Welded Steel or Copper Piping: Maximum hanger spacing shall be as follows:

	Steel	Copper
1-1/4" and smaller	7' span	6' span
1-1/2" pipe	9' span	6' span
2" pipe	10' span	10' span

2-1/2" & larger	12' span	10' span

3. Install additional hangers or supports at concentrated loads such as pumps, valves, etc. to maintain alignment and prevent sagging.
4. Support Rod: Hanger support rods sized as follows:

Pipe and Tube Size		Rod Size	
Inches	mm	Inches	mm
1/2” to 4”	12.7 to 101.6	3/8”	9.5
5” to 8”	127.0 to 203.2	1/2”	12.7
10” to 12”	254.0 to 304.8	5/8”	15.9

5. Provide manufactures approved channel continuously below all horizontal PEX or other plastic pipe where hung from structure.

D. Adjust hangers and supports to bring piping to proper levels and elevations.

E. Provide all necessary structural attachments such as anchors, beam clamps, hanger flanges and brackets in accordance with MSS SP-69. Attachments to beams wherever possible. Supports suspended from other piping, equipment, metal decking, etc., are not acceptable.

F. Horizontal banks of piping may be supported on common steel channel member spaced not more than the shortest allowable span required on the individual pipe. Maintain piping at its relative lateral position using clamps or clips. Allow lines subject to thermal expansion to roll axially or slide. Size channel struts for piping weights.

G. Installation of drilled-in concrete anchors shall comply with the manufacturer’s instructions for working load, depth of embedment, and spacing between anchors and from the edge of the slab. Use only wedge-style anchors.

H. Seismic Restraints, Anchors and Supports: Install restraints where recommended in SMACNA "Seismic Restraint Manual" and as required by code. Show analysis of supporting structure, anchorages, and restraints in accordance with OSSC Section 16 and reference ASCE standard. Seismic restraint system components shall be approved by the California Office of Statewide Health Planning and Development (OSHPD). Acceptable Manufacturers: Amber/Booth, Mason Industries, Tolco, or approved. Contractor shall submit calculations and shop drawings, sealed and signed by a Professional Engineer, showing seismic restraint design for all equipment, piping and ductwork required to be braced. S**eismic importance factor is 1.0.**

I. Ensure all copper piping is protected from contact with non-copper supports. Provide strut cushion below clamp or 2 layers of UPC listed 10 mil tape.

3.07 HVAC SYSTEM IDENTIFICATION

A. Piping System: Indicate each pipe system by its generic name (abbreviated) as shown/scheduled/specified. Comply with ANSI A13.1 for marker locations, letter sizes,

and colors. Include arrows to show direction of flow and "Electric Traced" signs to identify heat cable wrapped piping. Locate pipe labels in accessible areas as follows:

1. Near each valve, meter, gauge, or control device.
2. Near equipment such as pumps, heat exchangers, water heaters, etc.
3. At piping branch connections.
4. At penetrations (each side) of walls, ceilings, and floors.
5. At access panels and doors.
6. At 25 foot maximum intervals. Provide a minimum of one label above each room where lift-out ceiling is installed. Reduce intervals in congested areas such as mechanical rooms.

B. Equipment: Provide engraved plastic-laminate signs at locations of major equipment such as heat exchangers, pumps, etc. Identify equipment in field same as on drawings. Permanently mount in an appropriate and effective location.

C. Operation Tags: Where needed for proper and adequate information on operation and maintenance of mechanical systems, provide tags of plasticized card stock, either pre-printed or hand printed to convey the message; example: "DO NOT CLOSE THIS VALVE EXCEPT WHEN THE PUMP IS OFF."

3.08 EQUIPMENT CONNECTIONS

A. Provide complete connections for all items of equipment requiring such connections, including incidental piping, fittings, trim and labor necessary for a finished working installation.

B. Verify the rough-in and finish requirements for all equipment provided under other Divisions of the work and requiring HVAC piping or duct connections with equipment supplier and installer prior to rough-in.

3.09 PROTECTION

A. Protect all work and materials against loss or damage. Close all pipe openings with caps or plugs. At final completion, thoroughly clean and deliver all work and equipment in an unblemished new condition. Keep all motors and bearings in watertight and dustproof covers during entire course of installation.

B. Protect floors, walls, framing and sheathing where pipe cutting and threading operations are conducted with plastic sheeting under plywood sheets. Extend plastic sheeting beyond the plywood. Clean-up metal cuttings, oil, etc., daily or as necessary to prevent debris from being tracked beyond the protected area. Damages, as determined by the Architect, due to the pipe cutting/threading operation shall be repaired by the responsible trade.

3.10 CUTTING AND PATCHING

A. General: Comply with the requirements of Division 1 for the cutting and patching of other work to accommodate the installation of mechanical work. Do all necessary

cutting and patching of existing building and yard surfaces required for completion of the mechanical work. Patch to match finish and color of adjacent surfaces. Coordinate work in remodel and new areas to avoid cutting of new finished surfaces.

3.11 PIPE PENETRATION FIRE STOPPING

A. Install as recommended by manufacturer and in accordance with the product's UL listing. Below are the minimum installation requirements.

1. Install specified penetrating item(s) with required annular spacing in proper size wall or floor opening. Support penetrating item(s) adequately on both sides of construction.
2. Clean all opening and penetrating item surfaces in penetration area to remove loose debris, dirt, oil, wax, grease, old caulking, etc.
3. If needed or required for gypsum or concrete block walls, install specified galvanized steel wire mesh or sleeve recessed and centered inside wall around penetrating item(s) so that it is snug against perimeter of opening.
4. When required, install specified type and depth of backing material in annular space, recessed to required fill depth of fire stopping caulking.
5. Gun, trowel, and/or pump fire stopping sealant to specified depth in annular space around penetrating item(s). Trowel sealant surfaces flush with wall or floor surfaces to a smooth, defect-free finish. Where required, apply specified size caulking bead around penetrating item(s) at zero annular contact areas and tool smooth.

B. Drawings show some, not all, of the penetration. Review architectural drawings for all fire walls.

C. Sealants and Primers – General: Provide only products having lower volatile organic compound (VOC) content than required by South Coast Air Quality Management District Rule No. 1168.

3.12 MECHANICAL PAINTING

A. Minimum Requirements: Comply with minimum requirements of Division 9, Painting**.** All mechanical equipment, piping, insulation, etc., exposed in finished areas, storage rooms and other locations except mechanical equipment rooms will be painted under Section 09 9000.

3.13 HVAC WORK CLOSEOUT

A. General: Refer to the Division 1 sections for general closeout requirements. Calibrate all equipment requiring same. Complete each system as shown or specified herein and place in operation except where only roughing-in or partial systems are called for. Each system shall be tested and left in proper operation free of leaks, obstructions, or contamination.

B. Record Drawings: Submit record set of Drawings required in Division 1 as previously specified in this Section.

C. Closeout Equipment/Systems Operations: Sequence operations properly so that work of project will not be damaged or endangered. Coordinate with seasonal requirements. Operate each item of equipment and each system in a test run of appropriate duration with the Architect present, and with the Owner's operating personnel present, to demonstrate sustained, satisfactory performance. Adjust and correct operations as required for proper performance. Clean and lubricate each system and replace dirty filters, excessively worn parts and similar expendable items of the work.

D. Operating Instructions: Conduct a walk-through instruction seminar for the Owner's personnel who are to be involved in the continued operation and maintenance of the HVAC equipment and systems. Provide written instructions outlining and explaining the identification system, operational diagrams, emergency and alarm provisions, sequencing requirements, seasonal provisions, security, safety, efficiency and similar features of the systems.

END OF SECTION

SECTION 23 0548
MECHANICAL SOUND AND VIBRATION CONTROL

PART 1 GENERAL

1.01 DESCRIPTION

A. The requirements of this section apply to the vibration isolation for mechanical equipment specified elsewhere.

1.02 QUALITY ASSURANCE

A. Isolator Engineering: Selected and furnished by the equipment manufacturer. Select isolators for 98% efficiency unless indicated otherwise on the Drawings.

B. Manufacturer: Provide field installed isolation required from a single manufacturer where possible.

1.03 SUBMITTALS

A. Provide product data sheets on all vibration isolators and seismic restraints.

B. Provide itemized list showing the items of equipment or piping to be isolated, isolator type and model number selected, isolator loading and deflection, and reference to specified drawings showing frame and construction.

C. Provide manufacturer's drawings showing equipment frame construction for each item including dimensions, structural member sizes and support locations.

PART 2 PRODUCTS

2.01 ACCEPTABLE MANUFACTURERS

A. Manufacturers: Amber/Booth, Mason Industries, Vibration Mountings and Controls, Kinetics Noise Control.

B. Manufacturer Model Numbers: Amber/Booth figure numbers are listed unless indicated otherwise.

2.02 VIBRATION ISOLATORS

A. Types of Isolators:

1. Hanger with Spring and Rubber Stop: Combination neoprene element and spring hangers – Hangers shall consist of a steel frame containing a neoprene isolation element at the top and a coil steel spring seated in a neoprene cup on the bottom. Both the element and the cup shall be molded with a neoprene bushing that passes through the steel frame. The neoprene element shall be capable of an average deflection of 0.35”. The steel springs shall be capable of a minimum static deflection of 0.75” with a minimum additional travel to solid of

½". Spring diameters and hanger box lower hole size shall be large enough to permit the hanger rod to swing through a 30 degree arc before contacting the box and short circuiting the spring. Hangers shall be factory precompressed 60% of the total deflection determined by the assigned load per hanger. Hangers shall b manufactured with provision for bolting or attaching to ceiling flat iron straps, rods or steel runners. Hangers shall be of a fail-safe design. Amber / Booth BSRA.

2. Neoprene Pads: Neoprene pads shall be of waffle or ribbed design, 1/4" – 3/8" thick. They shall be installed as a single layer or in multiple layers with 16 gauge steel shims cemented between so that the combination of stiffness and total neoprene thickness achieves the static deflection listed in the vibration isolation schedule in conjunction with a distributed load area that will maintain 10-50 psi. If the equipment support location does not completely cover the pads or does not consist of flat steel footing, an additional full coverage, load distribution plate of minimum 3/8 steel shall be placed between the pad and attached to the equipment support. There shall be no rigid structure between top and bottom of mount. Amber / Booth Type NR Ampad.

B. Neoprene Mounts: Neoprene mounts shall be one piece, neoprene molded assemblies with a minimum loaded static deflection of 0.25". The mount shall incorporate both rubber-in-shear and compression load characteristics. All metal surfaces shall be neoprene covered. The mount shall have friction pads both top and bottom. Bolt holes shall also be provided for both surfaces. The top bolt hole shall be threaded. There shall be no rigid structure between top and bottom supports. Amber / Booth Type RV.

C. Noise and Vibration Barrier Hanger: For ductwork and piping where indicated. Target Enterprises Inc. "ARH-1" or accepted substitute.

D. Seismic and Start-Up Restraints: Select all isolators to withstand seismic loads equivalent two times the isolator load rating applied from any direction. Mason Industries type Z-1011 on all isolated equipment not utilizing isolators with integral restraints.

E. Flexible Pipe Connectors - Type SS: All stainless steel hose and braid with carbon steel connections. Male thread ends on flexible connectors 2" and smaller, and flanged connections on 1-1/2" and larger connectors.

F. Ductwork Flexible Connections:

1. Typical connections shall be made of 30 ounce woven glass fiber, coated with neoprene, sewn together at the edges and joints.
2. The flexible connections shall be approximately 6" long and held in place with 1" wide bands of 12 gauge galvanized steel bolted to duct and to outlets and inlets of the units and fans with 1/8" stove bolts, 5" o.c.
3. It is the intent that these flexible connections shall withstand the operating air pressure, shall not permit air leakage and shall not transmit vibration.

PART 3 EXECUTION

3.01 INSTALLATION

A. General: Install vibration isolators and flexible connectors as specified herein, as shown on the Drawings and as recommended by manufacturer.

B. Ductwork Flexible Connections: Install flexible duct connections on all externally spring isolated air handling units including roof mounted units down through roof curbs (and/or to unit side duct connections). Fan connections, both at inlet and discharge, shall be made with flexible materials so as to prevent the transfer of vibration from fans to ductwork connected thereto.

C. Flexible Pipe Connections:

1. Provide flexible connections on all piping to spring isolated equipment, where indicated on Drawings and for all coils mounted in spring isolated air handling units or plenums. Coils in rigid units and plenums do not require flexible connectors. Provide a flexible connection in both the supply and return connections to the coil as near the coil as possible.

2. Install connectors in a straight line as recommended by the manufacturer without offsets or twists and support pipe without any load on flexible connectors. Minimum live length shall be as follows:

Pipe Size	Minimum Live Length
1" through 1-1/2"	8"
2" through 2-1/2"	10"
3" through 4"	12"
Over 4"	18"

D. Anchorage: Anchor all isolators to the floor, wall or ceiling structure and anchor points reinforced where necessary. Anchor bolts, cap screws, etc., shall not be continuous through the isolator such that vibrations are transmitted to the structure.

E. Adjustment: Adjustable during and after installation, to ensure sufficient clearance between vibration isolation element and rigid restraining device. Do not install isolators until they have been loaded and adjusted to achieve the specified static deflection and clearances.

F. Housekeeping Pads: Construct minimum 3” thick with chamfered edges using 3000 psi concrete. Provide #4 reinforcing bars 8” on center in each direction and within 4” of each edge, centered in pad thickness. Provide ½” dowel with 3” embedment into floor slab for each 2 square feet of pad area. Dowels and equipment anchor bolts shall be spaced a minimum of 6” from pad edges.

3.02 EQUIPMENT RESTRAINTS

A. All equipment shall be anchored to resist displacement including sliding, swinging, and overturning due to seismic forces. Friction due to equipment weight shall not be considered as anchorage.

B. Contractor shall submit shop Drawings showing seismic restraint, anchorage, and support design for all equipment weighing 400 lbs. or more. Design shall show analysis of supporting structure, anchorages, and restraints in accordance with OSSC Section 16.

END OF SECTION

SECTION 23 0590
TESTING, ADJUSTING AND BALANCING

PART 1 GENERAL

1.01 DESCRIPTION

A. Work Included: After completion of the work of installation, test and regulate all components of the new heating, air conditioning and ventilating systems to verify air volumes and heating-cooling flow rates indicated on the Drawings.

B. Balancing Organization:

1. Balancing of the Heating and Air Conditioning Systems: Performed by a firm providing this service established in the State of Oregon.
2. Balancing Organization: Approval by Architect. Air Balancing Specialties, Neudorfer Engineers**,** Northwest Engineering Services, or approved.
3. Provide all necessary personnel, equipment, and services.

C. See 23 0800 for Commissioning and additional requirements.

1.02 QUALITY ASSURANCE

A. Balancing of the Heating and Air Conditioning Systems: Agency shall be a current member of NEBB or AABC specializing in the adjusting and balancing of systems specified with a minimum of 10 years documented experience.

B. Testing, adjusting, and balancing shall be performed under direct field supervision of a Certified NEBB Supervisor or a Certified AABC Supervisor.

C. See Commissioning Specification for additional requirements.

1.03 SUBMITTALS

A. See Section in Division 1, Administrative Requirements, for submittal procedures.

B. Submit name of adjusting and balancing agency for approval within 30 days after award of Contract.

C. Field Reports: Indicate deficiencies in systems that would prevent proper testing, adjusting, and balancing of systems and equipment to achieve specified performance.

1. Submit under provisions of Section 23 0500.
2. Prior to commencing work, submit report forms or outlines indicating adjusting, balancing, and equipment data required.
3. Submit draft copies of report for review prior to final acceptance of Project. Provide final copies for Architect and for inclusion in operating and maintenance manuals.

4. Provide reports in soft cover, letter size, 3-ring binder manuals, complete with index page and indexing tabs, with cover identification at front and side. Include set of reduced drawings with air outlets and equipment identified to correspond with data sheets, and indicating thermostat locations.
5. Include detailed procedures, agenda, sample report forms, and copy of AABC National Project Performance Guaranty or other certifying agency prior to commencing system balance.
6. Test Reports: Indicate data on AABC MN-1 forms, forms prepared following ASHRAE 111, NEBB forms, or forms containing information indicated in Schedules.
7. Include the following on the title page of each report:
   a. Name of testing, adjusting, and balancing agency.
   b. Address of testing, adjusting, and balancing agency.
   c. Telephone number of testing, adjusting, and balancing agency.
   d. Project name.
   e. Project location.
   f. Project Architect and Owner.
   g. Project Engineer.
   h. Project Contractor.
   i. Project altitude.
   j. Report date.

D. Project Record Documents: Record actual locations of flow measuring stations and balancing valves and rough setting.

E. Provide a list of equipment, air supply, return and exhaust, heating water, and chilled water systems not in compliance with tolerances subsequently specified.

PART 2 PRODUCTS

-- NOT USED --

PART 3 EXECUTION

3.01 EXAMINATION

A. Verify that systems are complete and operable before commencing work. Ensure the following conditions:
   1. Systems are started and operating in a safe and normal condition.
   2. Temperature control systems are installed complete and operable.
   3. Proper thermal overload protection is in place for electrical equipment.
   4. Final filters are clean and in place. If required, install temporary media in addition to final filters.

5. Duct systems are clean of debris.
6. Fans are rotating correctly.
7. Fire and volume dampers are in place and open.
8. Air coil fins are cleaned and combed.
9. Access doors are closed and duct end caps are in place.
10. Air outlets are installed and connected.
11. Duct system leakage is minimized.
12. Hydronic systems are flushed, filled, and vented.
13. Pumps are rotating correctly.
14. Proper strainer baskets are clean and in place.
15. Service and balance valves are open.

B. Submit field reports. Report defects and deficiencies noted during performance of services which prevent system balance.

C. Beginning of work means acceptance of existing conditions.

3.02 INSTALLATION TOLERANCES

A. Air Handling Systems: Adjust to within plus 10 percent or minus 5 percent of design for supply systems and +/- 10 percent of design for return and exhaust systems.

B. Air Outlets and Inlets: Adjust total to within plus 10 percent or minus 5 percent of design to space. Adjust outlets and inlets in space to within +/- 10 percent of design.

C. Hydronic Systems: Adjust to within +/- 10 percent of design.

3.03 ADJUSTING

A. Ensure recorded data represents actual measured or observed conditions.

B. Permanently mark settings of valves, dampers, and other adjustment devices allowing settings to be restored. Set and lock memory stops.

C. After adjustment, take measurements to verify balance has not been disrupted or that such disruption has been rectified.

D. Leave systems in proper working order, replacing belt guards, closing access doors, closing doors to electrical switch boxes, and restoring thermostats to specified settings.

E. At final inspection, recheck random selections of data recorded in report. Recheck points or areas as selected and witnessed by the Owner.

3.04 AIR SYSTEM PROCEDURE

A. Adjust air handling and distribution systems to provide required or design supply, return, and exhaust air quantities.

B. Make air quantity measurements in ducts by Pitot tube traverse of entire cross sectional area of duct.

C. Measure air quantities at air inlets and outlets.

D. Adjust noise distribution system to obtain uniform space temperatures free from objectionable drafts and noise.

E. Use volume control devices to regulate air quantities only to the extent that adjustments do not create objectionable air motion or sound levels. Effect volume control by duct internal devices such as dampers and splitters.

F. Vary total system air quantities by adjustment of fan speeds. Provide drive changes required. Vary branch air quantities by damper regulation.

G. Provide system schematic with required and actual air quantities recorded at each outlet or inlet.

H. Measure static air pressure conditions on air supply units, including filter and coil pressure drops, and total pressure across the fan. Make allowances for 50 percent loading of filters.

I. Adjust outside air automatic dampers, outside air, return air, and exhaust dampers for design conditions.

J. Measure temperature conditions across outside air, return air, and exhaust dampers to check leakage.

K. Where modulating dampers are provided, take measurements and balance at extreme conditions. Balance variable volume systems at maximum air flow rate, full cooling, and at minimum air flow rate, full heating.

L. Measure building static pressure and adjust supply, return, and exhaust air systems to provide required relationship between each to maintain approximately 0.02” (12.5 Pa) positive static pressure near the building entries.

M. For variable air volume system powered units, set volume controller to air flow setting indicated. Confirm connections are properly made and confirm proper operating for automatic variable air volume temperature control. Adjust drives to maximum airflow for highest static condition (maximum amps of motor). Allow VFD to regulate airflow per specification.

N. Space pressure Control, Return Fan Speed Endpoints: For variable air volume system with terminal unit zoning, attain return fan speed control endpoints based on the following values for the given operating mode. Coordinate with the HVAC control contractor for system setup and provide values when determined.

Return Fan Speed Endpoint Values				
Mode	**Supply Fan Speed Hi/Lo Reset Limits**	**Desired Space Pressure (InH2O)**	**Economizer Position**	**Return Fan Speed**
Full Heating (All terminal units are operating at heating flow setpoints)	TBD – Noted during the full heating condition	**Ideal - 0.02** Acceptable Test Range: 0.01 – 0.03	Min-Min (25% of the minimum ventilation requirement)	Minimum Return Fan Speed-TBD
Full Cooling (All terminal units are operating at cooling flow setpoints)	TBD – Noted during the full cooling condition	**Ideal - 0.02** Acceptable Test Range: 0.01 – 0.03	Min-Max (100% of the minimum ventilation requirement)	Maximum Return Fan Speed-TBD

O. CO2 controller set points – minimum CO2 setpoint (ppm), maximum CO2 setpoint (ppm)(setting for min OSA at full occupancy).

P. Outside air intake damper settings at minimum CO_2 and maximum CO_2 setpoint.

Q. Pressure relief fan: Measure space pressure over the range of AHU OSA dampers to establish an offset value to maintain mechanical rooms at specified pressure.

3.05 WATER SYSTEM PROCEDURE

A. Adjust water systems to provide required or design quantities. This includes domestic HVAC systems.

B. Use calibrated Venturi tubes, orifices, or other metered fittings and pressure gauges to determine flow rates for system balance. Where flow metering devices are not installed, base flow balance on temperature difference across various heat transfer elements in the system.

C. Adjust systems to provide specified pressure drops and flows through heat transfer elements prior to thermal testing. Perform balancing by measurement of temperature differential in conjunction with air balancing.

D. Effect system balance with automatic control valves fully open to heat transfer elements.

E. Effect adjustment of water distribution systems by means of balancing cocks, valves, and fittings. Do not use service or shut-off valves for balancing unless indexed for balance point.

F. Where available pump capacity is less than total flow requirements or individual system parts, full flow in one part may be simulated by temporary restriction of flow to other parts.

G. Where automatic flow control valves are installed (Dynamic devices, not circuit setters) record listed flow rate of device based on field verification. Testing is not required.

3.06 SCHEDULES

A. Equipment Requiring Testing, Adjusting, and Balancing:
   1. HVAC pumps
   2. Air cooled water chillers
   3. Air coils
   4. Air handling units
   5. Fans
   6. Air filters
   7. Air inlets and outlets

B. Report:
   1. Summary Comments:
      a. Design versus final performance
      b. Notable characteristics of system
      c. Description of systems operation sequence
      d. Summary of outdoor and exhaust flows to indicate amount of building pressurization
      e. Nomenclature used throughout report
      f. Test conditions
   2. Instrument List:
      a. Instrument
      b. Manufacturer
      c. Model number
      d. Serial number
      e. Range
      f. Calibration date

C. Electric Motors:
   1. Manufacturer
   2. Model/frame
   3. HP/BHP
   4. Phase, voltage, amperage; nameplate, actual, no load
   5. RPM
   6. Service factor
   7. Starter size, rating, heater elements
   8. Sheave make/size/model

D. V-Belt Drives:
   1. Identification/location
   2. Required driven RPM
   3. Driven sheave, diameter, and RPM
   4. Belt, size, and quantity
   5. Motor sheave diameter and RPM
   6. Center to center distance, maximum, minimum, and tested

E. Pumps:
   1. Identification/number
   2. Manufacturer
   3. Size/model
   4. Impeller
   5. Service
   6. Design flow rate, pressure drop, BHP
   7. Actual flow rate, pressure drop, BHP
   8. Discharge pressure
   9. Suction pressure
   10. Total operating head pressure
   11. Shut off, discharge, and suction pressure
   12. Shut off, total head pressure

F. Heating & Chilled Water Coils:
   1. Identification/number
   2. Location
   3. Service
   4. Manufacturer
   5. Air flow, design and tested
   6. Water flow, design and tested
   7. Water pressure drop, design and tested
   8. Entering water temperature, design and tested
   9. Leaving water temperature, design and tested
   10. Entering air temperature, design and tested
   11. Leaving air temperature, design and tested
   12. Air pressure drop, design and tested

G. Air Moving Equipment:
   1. Location
   2. Manufacturer
   3. Model number

4. Serial number
5. Arrangement/Class/Discharge
6. Air flow, specified and tested
7. Return air flow, specified and tested
8. Outside air flow, specified and tested
9. Total static pressure (total external), specified and tested
10. Inlet pressure
11. Discharge pressure
12. Sheave make/size/bore
13. Number of Belts/Make/Size
14. Fan RPM

H. Return Air/Outside Air:
1. Identification/location
2. Supply air flow, design and tested
3. Return air flow, design and tested
4. Outside air flow, design and tested
5. Return air temperature
6. Outside air temperature
7. Mixed air temperature, design and tested

I. Exhaust Fans:
1. Location
2. Manufacturer
3. Model number
4. Serial number
5. Air flow, specified and tested
6. Total static pressure (total external), specified and tested
7. Inlet pressure
8. Discharge pressure
9. Sheave Make/Size/Bore
10. Number of Belts/Make/Size
11. Fan RPM

J. Duct Traverses:
1. System zone/branch
2. Duct size
3. Area
4. Design velocity
5. Design air flow

6. Test velocity
7. Test air flow
8. Duct static pressure
9. Air temperature
10. Air correction factor

K. Air Distribution Tests:
1. Air terminal number
2. Room number/location
3. Terminal type
4. Terminal size
5. Area factor
6. Design velocity
7. Design air flow
8. Test (final) velocity
9. Test (final) air flow
10. Percent of design air flow

3.07 DETAILED REQUIREMENTS

A. Adjusting and Balancing:
1. Adjust and balance all portions of the mechanical systems to produce indicated results within limits of minus 5 or plus 10 percent or as subsequently directed by the Architect.
2. Balancing data may be spot checked with instruments similar to that used by the balancing firm.
3. If, in the judgment of the Architect, the discrepancies warrant additional adjustment, readjust and rebalance the systems at no additional project cost.

END OF SECTION

SECTION 23 0700
HVAC INSULATION

PART 1 GENERAL

1.01 DESCRIPTION

A. The requirements of this section apply to the insulation of mechanical equipment specified elsewhere in these specifications.

B. Related Work: The requirements of Section 23 0500, Common HVAC Materials and Methods, also apply to this section.

1.02 QUALITY ASSURANCE

A. Insulation Thickness and Thermal Performance: Comply with provisions of the State of Oregon Energy Code.

B. Composite (Insulation, Jacket or Facing and Adhesives) Fire and Smoke Hazard Ratings: Not to exceed a flame spread of 25 or smoke development of 50 and containing less than 0.1% by weight deca-PDE fire retardant.

C. Component Ratings of Accessories (Adhesives, Mastics, Cements, Tapes, Finishing Cloth for Fittings): Same as "B" requirements above and permanently treated. No water soluble treatments.

1.03 PRODUCT DELIVERY, STORAGE AND HANDLING

A. General: In addition to the requirements specified in Section 23 0500, the following apply:

1. Deliver insulation, coverings, cements, adhesives and coatings to the site in factory-fabricated containers with the manufacturer's stamp or label affixed showing fire hazard ratings of the products. Store insulation in original wrappings and protect from weather and construction traffic.
2. Protect insulation against dirt, water, chemical and mechanical damage. Do not install damaged insulation. Remove such insulation from project site.

1.04 SUBMITTALS

A. Submit catalog data and performance characteristics for each product specified.

PART 2 PRODUCTS

2.01 ACCEPTABLE MANUFACTURERS

A. Insulating Manufacturers: Johns Manville, Knauf, Armstrong, Owens-Corning, Pittsburgh Corning, Pabco, Imcoa or Certain Teed. Johns Manville products are listed unless indicated otherwise.

B. Adhesive Manufacturers: Foster, 3M, Insul-Coustic, Borden, Kingco or Armstrong.

2.02 PIPING INSULATION

A. Interior and Exterior Piping Systems 50 to 850 Deg. F: Glass fiber preformed pipe insulation with a minimum K-value of 0.23 at 75 Deg. F, a minimum density of 3.5 pounds per cubic foot within all-service vapor barrier jacket, vinyl or pre-sized finish and pressure sensitive seal containing less than 0.1% by weight deca-PDE fire retardant.

B. Exterior Installations: Same as for interior installations except 0.016" aluminum finish jacket

C. Pipe Temperatures Minus 30 to 180 Deg. F: Flexible, preformed, pre-slit, self-sealing elastomeric pipe insulation up to 2-1/8" ID, thermal conductivity of 0.27 BTU/hr. sq. ft./in. at 75 deg. F and vapor transmission rating of 0.2 perms/inch. Apply in thickness necessary to prevent condensation on the surface at 85 deg. F and 70% RH. Armstrong "Armaflex 2000" or, in concealed locations, Imcoa or Nomaco also approved.

D. Interior Piping Systems 32 to 50 Deg. F: Glass fiber preformed pipe insulation with a minimum K-value of 0.23 at 75 deg. F, a minimum density of 3.5 pounds per cubic foot. Polymer vapor barrier jacket containing less than 0.1% by weight deca-PDE fire retardant and with pressure sensitive seal and wicking system to remove condensation from pipe surface. Owens Corning “VaporWick.”

2.03 DUCT INSULATION

A. Interior Above Grade Ductwork: Glass fiber formaldehyde-free blanket with "FSK" facing, k value = 0.31 at 75 deg. F, 0.2 perms, and UL 25/50 surface burning rating. Johns Manville "Microlite."

2.04 EQUIPMENT INSULATION

A. Equipment Temperatures Below 70 Deg. F: Flexible, closed cell, elastomeric sheet insulation of 5.5 #/cubic feet density and 0.27 thermal conductivity at 75 deg. F. Armstrong "Armaflex."

B. Equipment Temperatures From 70 to 450 Deg. F: Glass fiber 3 pound density insulation with a 0.23 thermal conductivity at 75 deg. F. Johns Manville "814 Spin-Glas" with "FSK" jacket containing less than 0.1% by weight deca-PDE fire retardant or finished as recommended by manufacturer.

2.05 INSULATION ACCESSORIES

A. Insulation Compounds and Materials: Provide rivets, staples, bands, adhesives, cements, coatings, sealers, welded studs, etc., as recommended by the manufacturers for the insulation and conditions specified except staples not permitted on chilled water lines.

B. Interior Tanks and Equipment Insulation Covering: Finished metal jacket or as recommended by the manufacturer for insulation material specified.

C. PVC Protective Jacketing and Valve and Pipe Fitting Covers: Johns Manville Zeston 2000, Proto LoSmoke, or Ceel-Co Ceel-Tite 100 Series with precut fitting fiberglass insulation or approved.

D. Jacket Lap Sealing Adhesives: Foster Drion 85-75 contact cement or approved substitute.

E. Saddles and Shields: Unless otherwise indicated and except as specified in piping system specification sections, install the following types:

1. Steel Pipe-Covering Protection Saddles (MSS Type 39): To fill interior voids with insulation that matches adjoining insulation.
2. Protection Shields (MSS Type 40): Of length recommended by manufacturer to prevent crushing insulation.
3. Thermal-Hanger Shield Inserts: For supporting insulated pipe, 360-degree insert of high-density, 100-psi (690-kPa) minimum compressive strength, water-repellent-treated calcium silicate or cellular-glass pipe insulation, same thickness as adjoining insulation with vapor barrier and encased in 360-degree sheet metal shield.

PART 3 EXECUTION

3.01 PIPING INSULATION

A. General: Do not insulate underground piping except at joints and fittings on preinsulated piping unless indicated otherwise.

B. Heating Water Piping: Insulate with glass fiber or elastomeric pipe covering:

Size	Thickness
1/2" to 1-1/2"	1-1/2"
2" to 3"	2"
4" and larger	2-1/2"

C. Chilled Water Piping: Above grade insulate with glass fiber pipe covering:

Size	Thickness
1/2" to 1-1/4"	1/2"
1-1/2" and larger	1"

D. Pipe Fittings:

1. Insulate and finish all fittings including valve bodies, bonnets, unions, flanges and expansion joints with precut fiberglass insulation and preformed PVC covers

sealed to adjacent insulation jacket for continuous vapor barrier covering over all fittings.

2. Provide removable/reusable insulation covers on 4" and larger valves, unions, flanges, pump casings, strainers and similar fittings or equipment requiring periodic service.

E. Protective Covering: Install continuous protective metal covering on all piping and fittings outside / above roof. Install with bands, screws are not allowed.

F. Insulated Piping: Comply with the following.

1. Attach clamps and spacers to piping.
   a. Piping Operating above Ambient Air Temperature: Clamp may project through insulation.
   b. Piping Operating below Ambient Air Temperature: Use thermal-hanger shield insert with clamp sized to match OD of insert.
   c. Do not exceed pipe stress limits according to ASME B31.9.
2. Install MSS SP-58, Type 39 or Type 40 protection saddles, if insulation without vapor barrier is indicated. Fill interior voids with insulation that matches adjoining insulation.
   a. Thermal-hanger shield inserts may be used. Include steel weight-distribution plate for pipe NPS 4 (DN100) and larger if pipe is installed on rollers.
3. Shield Dimensions for Pipe: Not less than the following.
   a. NPS 1/4 to NPS 3-1/2 (DN8 to DN90): 12 inches (305 mm) long and 0.048 inch (1.22 mm) thick.
   b. NPS 4 (DN100): 12 inches (305 mm) long and 0.06 inch (1.52 mm) thick.
   c. NPS 5 and NPS 6 (DN125 and DN150): 18 inches (457 mm) long and 0.06 inch (1.52 mm) thick.
   d. NPS 8 and NPS 14 (DN200 and DN350): 24 inches (610 mm) long and 0.075 inch (1.91 mm) thick.
   e. NPS 16 and NPS 24 (DN400 and DN600): 24 inches (610 mm) long and 0.105 inch (2.67 mm) thick.
4. Pipes NPS 8 (DN200) and Larger: Include wood inserts.
5. Insert Material: Length at least as long as protective shield.
6. Thermal-Hanger Shields: Install with insulation same thickness as piping insulation.

G. Piping Insulation Lap Seams and Butt Joints: Install insulation jacket in accordance with manufacturer's recommendation. Where jacket joint and lap seams have not adhered, remove affected section of insulation and reinstall or apply lap sealing adhesive in accordance with manufacturer's instructions.

3.02 DUCTWORK INSULATION

A. Ductwork: Insulate the following:

1. All supply ductwork.
2. All supply and return ductwork in systems routed in unconditioned spaces or exposed to the outside conditions.
3. All outside air intake ducts.
4. All ductwork required to be insulated by code.
5. All relief ducts.

B. Insulation Thickness: Select board and blanket insulation of thickness required to provide the following installed R-value.

1. All heating or cooling system supply and return ducts located on the exterior of the insulated building envelope and all outside air intake ducts.
   a. R-8
2. All heating and cooling system supply ducts located inside of building envelope or in unconditioned spaces, R-5.
3. All heating and cooling system return ducts located in vented spaces, R-8.

C. Fittings: Wire and duct adhesive as required. To prevent sagging on all rectangular or square ducts over 24" wide, install Gramweld or equal welding pins on the bottom. Maximum spacing 18" on center in both directions.

D. Installation: Applied with butt joints, all seams sealed with vapor seal mastic or taped with 2" wide vapor-proof, pressure-sensitive tape. Seal all penetrations with vapor barrier adhesive.

E. Internally Lined Ductwork: Where internally lined ductwork is indicated on the Drawings and/or specified, no exterior insulation is required. Select duct lining to provide the required R-value. Carefully lap the ends of the exterior insulation a minimum of 6" past the interior insulation unless otherwise shown. Seal the end of vapor barrier jacket to the duct with mastic where the vapor barrier is required. Duct lining is specified in Section 23 3000.

3.03 EXPANSION JOINTS

A. Insulation: Insulate expansion joints on heating and/or cooling piping to match thickness of adjacent piping. Build up piping insulation adjacent to the expansion joints sufficiently to allow internal clearance within the insulation for the diameter of the expansion joint. Fasten one end of the expansion joint insulation securely and provide aluminum or sheet metal on the built-up insulation at the other end to permit movement of the insulation without damage.

B. Finish: Finish as specified for adjacent piping with fireproof covering.

END OF SECTION

SECTION 23 0923
DDC CONTROLS

PART 1 GENERAL SYSTEM DESCRIPTION

1.01 GENERAL REQUIREMENTS

A. Drawings and general provisions of the Contract, including General and other Conditions and other Division 1 – General Requirements sections, apply to the work specified in this Section.

B. See 23 0800 for Commissioning and additional requirements.

1.02 BASIC SYSTEM

A. Building Automation System (BAS) system shall utilize DDC to control valve and damper actuators for all mechanical equipment as specified in the sequence of operation and in the drawings for all systems.

B. The control system shall be fully integrated and installed as a complete package of controls and instruments in a manner that provides maximum benefit to the end user.

C. The system shall include all computer software and hardware, control unit hardware and software, operator input/output devices, sensors, control devices, and miscellaneous devices required for complete operation and future modifications. Documentation for all software and hardware devices shall be provided.

D. Provide engineering, installation, calibration, commissioning, acceptance testing assistance, software programming, and checkout for complete and fully operational DDC.

E. This system replaces an existing digital control system. It is the intention of these specifications to allow the reuse of devices (damper actuators, control valve and actuators, duct and pipe mounted temperature and pressure sensors, control relays, and control cabinets). Additionally any existing wiring and conduit that is compliant with these specifications and compatible with the new system may be reused if tested and found to be functional. During system commissioning if devices are found to be fault replacement shall be completed as an extra service by the contractor to the owner on a time and material basis.

1.03 SCOPE OF SERVICES (OVERVIEW OF SECTION 23 0923)

A. Work under this section of the specification shall include, but not limited to, the following:

1. Furnish and install a complete sensor, actuator, wiring and piping system for all air handling and related equipment as shown on the plans and specified in this section. Install all necessary sensors and actuators as required by the plans and specifications and equipment schedules.

2. Label all sensors, control devices, and control units.
3. Furnish and install conduit, wire, branch circuit protection, etc. as required to bring 120 VAC power to control panel locations and equipment (actuators, sensors, control devices, etc.) as shown on the drawings and described in the specifications.
4. All line drivers, signal boosters, and signal conditioners etc. shall be provided as necessary for proper data communication.
5. Coordination as required with other sections of the specification for the proper and complete installation of the wiring system, control devices, dampers, valve, actuators, etc.
6. Furnish and install Direct Digital Control Equipment (DDC) as required by the point list, plans, and specifications including, control units, software, database development, check-out, and debugging. Provide points necessary for a complete and operable system.
7. Install the sequence of operations specified in the drawings and in this section.
8. Software testing requirements shall include testing in the field of all logic sequences including actual simulation of different processes and events and observing program response to the process or event. All deviations from the requirements of the sequence as specified on the drawings or this specification shall be corrected immediately at no additional cost to the Owner.
9. Provide documentation of software system testing before acceptance testing.
10. Provide staff for acceptance testing procedures. Modify hardware and software errors/problems at no additional cost to the Owner.
11. Provide a series of training classes for Owner staff.
12. Setup trending data before and after system acceptance.
13. Attend a series of meetings with the Engineer and Owner to agree on system setup and operating parameters.
14. Provide detailed documentation of system configuration including control units and all control devices.
15. Provide all software (with hardware connections) and software license for district computer as required.
16. Read this section in its entirety for specific details.
17. If the Control Contractor cannot comply with any of these specifications, then the Control Contractor must explain in writing the reasons for non-compliance and provide an alternative approach that satisfies these requirements.
18. Provide all equipment and personnel to complete system commission per previous section and as listed further in specification.
19. Prior to any submittal being provided for review by Engineer the Control Contractor and equipment supplier shall meet. The sequence of operation shall be reviewed and the instance which the BAS shall read or write to shall be determined. The result of this meeting shall be a sequence for the integrated HVAC unit to the control system with all instances of communication noted.
20. See Commissioning specifications for addition scope.

1.04 QUALITY ASSURANCE AND SYSTEM OVERVIEW

A. Extend or modify the Alerton BAS installed previously in phase1

B. Commissioning of the new mechanical devices and control system shall be completed. Coordinate with Owners Commissioning Contractor.

1.05 CONTROL CONTRACTOR/MANUFACTURER QUALIFICATIONS

A. Alerton installed by Environmental Control Corporation.

1.06 RELATED SECTIONS

A. Drawings and general provisions of Contract, including General and Supplementary Conditions, Mechanical Special Conditions, Electrical Special Conditions and Division - 1 Specification.

B. Coordination with Other Trades:

1. This section specifies cooperation of the Control Contractor (the combination of installer and programmer hence forth) with other trades and including balancing firm to assure proper arrangement of control items. Control valves, dampers, wiring, thermostat wells, and other control devices that are to be built into the field assembled ductwork, piping, or wiring systems shall be furnished by the Control Contractor and installed under other sections of the specification as directed by the Control Contractor and indicated in other portions of the specifications and drawings.
2. The Control Contractor shall insure that the DDC system communicates successfully with other equipment provide with package controls. Note: the equipment supplier is responsible for the proper performance of their equipment (assuming the proper signals are sent/received from the BAS).
3. Electrical Wiring: All wiring required for work under this section of the specification shall be provided under this section of the specification unless otherwise specified.
4. Electrical wiring - power for control panels, control devices, and sensors
   a. Power for control units, control devices and sensors shall be coordinated with the air handling manufacturer for the project and/or the Owner.
   b. Contact locations in starter control circuits. All contacts controlling motor starters, including overload contacts, shall be located on the hot side of the coil (ungrounded control power leg). Coordinate this requirement with the air handling manufacturer for the project.
   c. Extend power to damper actuators.
      1) Actuators will be powered at 24 VAC.
      2) At each auxiliary panel location, furnish and install a 24 VAC transformer with 20 VA of capacity for each actuator installed and served from the panel.

3) Furnish and install a fused terminal in the +24 VAC lead and a disconnecting terminal in the neutral lead of the power cable to each actuator.

5. Testing, Adjusting and Balancing: If necessary, The Controls Contractor shall operate the BAS to assist the TAB Contractor.

1.07 QUALITY CONTROL – CODES AND STANDARDS

A. All work, materials, and equipment shall comply with the rules and regulations of all codes and ordinances of the local, state, and federal authorities. Such codes, when more restrictive, shall take precedence over these plans and specifications, As a minimum, the installation shall comply with the current editions in effect 30 days prior to receipt of bids for the following codes:

1. National Electric Code (NEC)
2. Uniform Building Code (UBC), Oregon Structural Specialty Code
3. Uniform Mechanical Code (UMC), Oregon Mechanical Specialty Code
4. Underwriters Laboratories (UL)
5. National Electric Manufacturers' Association (NEMA)
6. National Fire Prevention Association (NFPA)
7. American Society Of Heating, Refrigeration, And Air Conditioning Engineers (ASHRAE)
8. Instrument Society Of America (ISA)
9. National Institute of Standards and Technology (NIST).

B. Meet all of the local authorities and State Fire Marshal code requirements for normal operating and smoke mode functions.

1.08 SUBMITTALS

A. Shop Drawing submittals are required for the following, in accordance with Section 23 0500. The Contractor shall not start the project until the Shop Drawings have been submitted and approved. Shop Drawings shall include:

1. All submittals should be provided on paper (with legible font type and size).
2. All Drawings should be labeled TC (temperature control) rather than being referenced within the mechanical or electrical divisions. Sheets shall be consecutively numbered
3. One Drawing per air handler or system (e.g., boiler plant). Drawing should include point descriptors (DI, DO, AI, AO), addressing, and point names. Each point names should be unique (within a system and between systems). For example, the point named for the mixed air temperature for AH#1, AH #2, and AH #3 should not be MAT but could be named AH #1 MAT, AH #2 MAT, and AH #3 MAT. The point names could be logical and consistent between systems and AHs. The abbreviation or short hand notation (e.g., MAT) should be clearly defined in writing by the Control Contractor. See Section 5 for Naming Standard.

4. Floor plans depicting all BAS control devices (control units, control devices, gateways, LAN interface devices, actuators, sensors, motor control centers, etc.) in relation to mechanical rooms, HVAC equipment, and building footprint.
5. DDC System Engineer diagram indicating schematic location of all Control Units, workstations, LAN Interface devices, gateways, etc. Indicate address and type for each Control Unit. Indicate protocol, baud rate, and type of LAN (per Control Unit).
6. For each Drawing, include a schematic flow diagram of each air and water system showing fans, coils, dampers, valves, pumps, heat exchange equipment, control devices, etc. Label each control device with setting or adjustable range of control. Label each input and output with the appropriate range.
7. Electrical wiring diagrams shall include both ladder logic type diagrams for motor start, control, and safety circuits and detailed digital interface panel control point termination diagrams with all wire numbers and terminal block numbers identified. Indicate all required electrical wiring. Provide panel termination drawings on separate drawings. Ladder diagrams shall appear on system schematic. Clearly differentiate between portions of wiring that are existing, factory-installed and portions to be field-installed.
8. Show all electric connections of the controls system to equipment furnished by others complete to terminal points identified with manufacturer's terminal recommendations.
9. Control Contractor shall provide one complete drawing that shows the equipment (fan unit, boiler, chiller, etc.) manufacturers wiring diagram with the Control Contractors wiring diagram superimposed on it. Supply hard copy.
10. Provide sequence of operation based on sequence in these documents, as discussed with Engineer and Owner and as modified based on site conditions and normal programming protocol. Provide details such as levels controlled to and point designations. Simply copying the sequence from these documents is not sufficient.
11. Provide complete panel Drawings that are:
    a. Clearly labeled.
    b. Show the internal and external component arrangement so that the operators can identify the components by their position if the labels come off.
    c. Wiring access routes should also be identified so that Class 1 wiring is separated from Class 2 and 3 and so high voltage wiring is segregated from low voltage wiring and tubing.
12. Cataloged cut sheets of all equipment used. This includes, but is not limited to, the following: DDC panels, peripherals, sensors, actuators, dampers, control air system components, and so forth.
    a. Range and scale information for all transmitters and sensors. This sheet shall clearly indicate one device and any applicable options. Where more than one device to be used is on a single sheet, submit two sheets, individually marked.

b. Manufacturer's installation, operation and maintenance data for all equipment.

13. Training course outlines for each four-hour session.
14. Hardware data sheets for all operator workstations, local access panels, and portable operator terminals.
15. Software manuals for all applications programs to be provided as a part of the operator workstations, portable operator terminals, programming devices, and so forth for evaluation for compliance with the performance requirements of this Specification.
16. Initial project team Quality Assurance compliance report.
17. Bill of materials for each system with part numbers.
18. Provide all necessary BACnet-compliant hardware and software to meet the system's functional specifications. Provide Protocol Implementation Conformance Statement (PICS) for Windows-based control software and every controller in system, including unitary controllers.
19. Damper schedule should include:
    a. Action (normally open or closed)
    b. Direct or reverse actuation
    c. Manufacturer make and model
    d. Design pressure drop at full flow
    e. Leakage rate
    f. Operating range
    g. Flow rate
    h. Actuator requirements
    i. Actuator spring range
    j. Special construction features (U.L. listed smoke damper, etc.)
20. A set of drawings showing the details of the valve and valve actuator installation for each valve, required for operation and maintenance manuals only. This should include:
    a. Action (normally open or closed)
    b. Manufacturer make and model
    c. Cv
    d. Close off rating
    e. Flow rate
    f. Actuator spring range
    g. Cavitation coefficient (where applicable)
    h. Special construction features
21. Shop drawings submitted are required within 21 days of contract award.
22. The control drawings for this phase of work shall be an extension of the original phase 1 drawings. Meaning the control record drawings for this school once this phase of contraction is complete shall be a single volume containing the

information from the phase 1 and phase 2 work. Separate phase 1 and phase 2 documentation is not allowed. Provide only new product data for new phase 2 items in the phase 1 product information.

B. Record Documents:

1. Provide a complete set of control drawings with as-installed equipment and operating sequences on paper and in electronic format (AutoCAD). “As-built” (i.e., as-installed and debugged and after system acceptance) documentation shall include the following as minimum:
   a. All data specified in the shop drawings section in its final "as-built" form.
   b. Schematic outline of the overall control system for quick reference
   c. Adequate record of the work as installed, including exact location of control panels and the wiring route (using TC documents, section 1.8-3).
   d. Blue prints shall include sequence of operation.
   e. System hardware specification data which provides a functional description of all hardware components.
   f. System engineering information which provides all of the information for the system set-up, definition and application.
   g. System database information that provides the point names and application data programmed into the system.
   h. All of the information, data, procedures and drawings shall be supplied in the form of manuals.
2. Provide as-installed (after system acceptance) control logic diagrams showing all points (real and virtual).
3. DDC systems that use line-based programming must reference line code number with control logic diagrams and/or with sequence of operation text. Control Contractor shall discuss final format with Owner.
4. Provide licensed electronic copies of all software for each workstation and laptop. This includes, but is not limited to: project graphic images, project database, trouble-shooting and debugging programs, project-specific application programming code and all other software required to operate and modify the programming code (including software at system level, primary control units, secondary control units, and all communication software). Any hardware devices (cables, protection devices) required to operate the software/hardware shall also be provided.
5. The Control Contractor shall document deviations from the shop drawing submittals. Documentation should include what equipment was changed and the reason for the change.
6. Provide copy of final test reports.
7. Provide within 21 days of substantial completion.
8. Documents shall be provided as a PDF file. See O & M for number of hard copies.

C. Operating and Maintenance Materials:

1. Submit three sets of each manual within three weeks (21 calendar days) of Substantial Completion.
    a. Include the following documentation in the Hardware Manual:
        1) General description and cut sheets for all components.
        2) Detailed wiring and installation illustrations and complete calibration procedures for each field and panel device.
        3) Complete trouble-shooting procedures and guidelines.
        4) Complete operating instructions for all systems.
        5) Maintenance Instructions: Document all maintenance and repair/replacement procedures.
    b. Include the following documentation in the DDC Software Manual:
        1) Sequence of Operations
        2) Program Listing of Software Source Code OR Flow Chart Diagrams of Programming Objects.
        3) Printed listing of controller and operator workstation database files.
        4) Software Point Name Abbreviation List. Include Name, Description, Controller Where Located, Point Type and Point ID.
        5) I/O Point List. Include Point Name, Controller Location, Point Number, Control Device, Range and Span.
        6) Printouts of the following; Reports, Group Listings and Alarm Messages.
        7) Index of all DDC point names with documentation, manual page number references.
    c. Provide three copies of all manufacturers manuals covering the installed system. This shall include, as a minimum:
        1) System Engineering Manual
        2) System Installation Manual
        3) Programming Manual
        4) Engineering and Troubleshooting Bulletins
        5) Operator Workstation Software Manual
        6) All other pertinent manuals published by the control system manufacturer.
2. All manuals shall be provided in hard copy format and on a single Compact Disk (CD). The electronic files on the CD must be submitted in a user editable PDF format, scanned files are unacceptable. Copyrighted factory manuals may be in a PDF file.

1.09 WARRANTY

A. Material:
1. The Control System shall be free from defects in material and workmanship under normal use and service. If within twenty-four (24) months from the date

of substantial completion any of the equipment herein described is defective in operation, workmanship or materials, it will be replaced, repaired or adjusted at the option of the Controls Contractor free of charge.

B. Installation:

1. The Control System shall be free from defects for a period of one year from acceptance. The Controls Contractor shall, free of charge, correct any defects in workmanship within one week of notification in writing by the Owner.

C. System Compatibility

1. The Controls Manufacturer will provide a written guarantee to the Owner that the system and technology being provided will be supported for a minimum of ten years.

1.10 DELIVERY AND STORAGE

A. Provide factory-shipping cartons for each piece of equipment and control device not factory installed. Provide factory applied plastic end caps on each length of pipe and tube. Maintain cartons and end caps through shipping, storage, and handling as required to prevent equipment and pipe-end damage, and to eliminate dirt and moisture from equipment and inside of pipe and tubes. Store equipment and materials inside and protected from weather.

1.11 DEMOLITION

A. Above accessible ceilings remove all control devices, tubing and wire no longer used.

B. Remove all control devices no longer used.

1.12 DISCREPANCIES

A. Any items not included in the specification but referred to in the Appendix and/or Drawings in reference to this project and any other incidentals not referred to but required as a basic element to the overall performance and/or successful completion of the work shall be installed as part of this contract.

PART 2 PRODUCTS

2.01 BASIC MATERIALS, CONTROL DEVICES, SENSORS

A. Installation of some of the equipment in this section may be the responsibility of other Contractors (see 1.5).

B. All sensors and equipment related to or connected to the DDC system shall be installed according to manufacturer's recommendations.

2.02 WIRING, CONDUIT, AND HANGERS

A. To supply, install and connect all conduits, boxes and wires between all the different components related in this section including all line voltage to the equipment.

B. Provide all necessary field wiring and devices from the point of connection indicated on the drawings. Bring to the attention of the Engineer in writing, all conflicts, incompatibilities, and/or discrepancies prior to bid or as soon as discovered.

C. Field Wiring: It is the intent of these specifications that all systems shall be complete and operable. Refer to all drawings and specifications to determine voltage, phase, circuit ampacity and number of connections provided.

D. All wiring and fiber optic cable in the central plant, tunnels, and plenums to be supported by B-line Bridle rings or equal. All wiring and fiber optic cable in the hallways, rooms, and other public areas shall be in conduit unless noted otherwise in section H.

E. All wires in Bridle Rings or conduit shall follow building lines (i.e., wires in plenum space shall run within several inches of the wall and shall NOT run in the middle of the space). Those areas of the building with RA plenum ceilings where wire is routed above that wire shall be plenum rated or routed in conduit.

F. Wire:

1. Wire and cable of the sizes and types shown on the plans and/or hereinafter specified shall be furnished and installed by the Control Contractor. All wire and cable shall be new soft drawn copper and shall conform to all the latest requirements of the National Electrical Code, IPCEA, and shall meet the specifications of the ASTM.
2. All control wiring to be copper stranded TEW-105, with appropriate gauge in accordance with the Codes. The minimum gauge used to be 16 AWG.
3. Input/Output Wiring: Wiring serving inputs and outputs from the BAS shall be cables consisting of single or multiple twisted individually shielded pairs. Each pair shall have an independent shield with drain wire. Cables installed without conduit shall be plenum rated and comply with NEC article 725. Where automation input/output wiring is run in cable tray furnish and install conductors or multi-conductor cable rated for use in cable trays per NEC articles 340 and/or 725. Conductors shall be minimum #18 wire gauge.
4. Power Conductors: All feeder and branch circuit wire shall be 600 V insulated of THHN type unless shown or specified to be otherwise. No wire less than No. 12 gauge shall be used except for control circuits or low voltage wiring. Wire sizes No. 14 to No. 10 shall be solid except where otherwise indicated. Wire sizes No. 8 and larger shall be stranded. All wire sizes shown are American Wire Gauge sizes. Where power conductors are run in cable tray, furnish and install conductors or multi-conductor cable rated for use in cable trays per NEC articles 340 and/or 725.
5. All the conductors used for signals from the Controllers and field sensors must be shielded two wire, 18 AWG. with a drain wire. Conductor model 8760 from Belden is to be used or approved alternative by Engineer.

6. All power wiring to be copper stranded RW 90 type, with appropriate gauge in accordance with the Codes. The following color code must be applied: line voltage to be black and/or white, ground to be green.
7. Acceptable Manufacturers: Cable and wire shall be a standard type as manufactured by General Electric Company, National Electric Company, U. S. Rubber Company, Simplex, General Cable Company, Carol, Anaconda, Rome, Southwire, Belden, Alpha, Houston Wire and Cable, or ITT Royal.

G. Wiring Installation:
1. All wires shall be continuous from outlet to outlet and there shall be no unnecessary slack in the conductors.
2. All wire terminations will be identified using rail terminal strips (see 5.11)
3. All drain wires must be grounded at the source end. The other end must be protected with a dielectric material (tape).
4. All control wiring (24 V and more) must be in a separate conduit from the shielded conductors.
5. Pull-Box and Junction Box:
   a. Pull boxes and junction boxes shall be installed where indicated on the drawings or where required to facilitate wire installation. Locate in conjunction with other trades so as to install without conflict with other materials or equipment.
   b. A pull-box will be located at every 50'.
   c. All switch, pull, junction boxes, etc., shall be hot dipped galvanized or sherardized, concrete tight, with interlocking ring or multiple point locking devices. Connectors shall be three piece. Indentation fittings are not acceptable.
   d. In suspended ceilings, all boxes must be installed on the structure.
   e. Boxes shall be attached by fasteners designed for the purpose and shall provide adequate mechanical strength for future maintenance.
   f. Junction and pull boxes not dimensioned shall be minimum 4 inch square.
6. Care shall be used to avoid proximity to heat ducts and/or steam lines. Where crossings are unavoidable, conduit shall clear covering of line by at least six inches.
7. Motor Interlock Wiring: Interlock circuit wiring shall be No. 14 solid or stranded wire. Stranded wire only shall be used where wiring is used for flexible wiring harnesses. Stranded control wire shall be provided with crimp type spade terminators. Interlock circuit wiring shall be color coded or numbered using an identical number on both ends of the conductor. Wire numbers shall be installed before conductors are pulled. Where motor interlock conductors are run in cable tray, furnish and install conductors or multiconductor cable rated for use in cable trays per NEC articles 340 and/or 725.
8. All splices, taps, and terminations shall be made at outlet, junction, or pull boxes. Wire to No.6 gauge shall be spliced using Scotchlok wire nuts. No

Bakelite wirenuts shall be used. Wire No. 6 and larger shall be spliced using solderness connectors as manufactured by Penn Union Company. Splices No. 6 and larger shall be insulated by taping with plastic vinyl tape as manufactured by Minnesota Mining and Manufacturing Company. Splices shall not be permitted in automation input and output wiring without specific written authorization from the Engineer. If such a splice is approved, the location of the splice shall be clearly documented on the "As Built" drawings. Splices in automation wiring, if necessary, shall be made using Thomas&Betts STA-KON connectors installed per the manufacturer's directions to maintain NEMA specified voltage drops and wire retention forces.

9. Existing wiring: Where existing wiring meets these specifications and is tested for operation it may be reused. In reusing communication and control wiring the Contractor agrees to cover any defects in the existing wiring that is re-used. Remove all unused wiring.

10. Grounding:

    a. The Contractor shall extend existing equipment grounding systems. The Contractor shall use only approved grounding clamps and connectors as manufactured by Penn-Union, Burndy or O-Z Mfg. Company.

    b. The conduit system of the 480/277 and 208Y/120 volt systems shall be continuous and shall be used as the static grounding conductor, except for circuits installed in flexible conduit. Install a green grounding conductor inside all flexible conduits and extend to the nearest outlet or junction box. Install a green grounding conductor inside all non-metallic conduits or raceways.

H. Conduit:

1. Conduit Material:

    a. All wiring to be in E.M.T. type conduits unless in plenum or otherwise noted below.

        1) Above accessible ceilings open cable with bridle ring support is allowed.

        2) Routed in corridors or other finished spaces on top of exposed sheet metal ducts supported with open wire way devices attached to the center top of the duct is allowed. Wire shall not be visible under casual observation of the installation.

        3) 12 ft. or more above the floor in mechanical rooms where supported per specifications.

    b. All conduits to be a minimum of 1/2".

    c. All flexible conduits will not exceed 6' in length and are to be used only in areas where vibrations and/or expansion joints are present.

    d. Flexible conduit to be used for connecting any element to its conduit. The length of this flexible conduit will not exceed 24".

    e. Jacketed flexible steel conduit (Sealtite) shall be used where flexible conduit connections are required outdoors and at connections to all motorized equipment and motors outdoors.

f. In damp areas, the conduit and related equipment must be suitable for the application.

g. Electrometalic tubing shall be installed for all exposed work and for all concealed work in applications where conduit is required. For exposed locations in finished spaces (halls, classrooms, offices, gym's etc.) conduit shall be powder coated. This includes all junction boxes, splice boxes, connectors, etc. Rattle can painted/site painted conduit and devices are not allowed. Provide color sample for Owner approval.

h. Conduit shall be by Allied, Triangle, Republic, Youngstown, Carlon, Rob Roy, or approved equal.

i. For exposed installations where the conduit cannot be run in ceiling spaces, wall cavities or attics, EMT is allowed. Regular EMT is permitted in mechanical spaces, attics, etc.

j. Existing conduit may be re-used if compliant with these specifications.

2. Conduit Installation:

a. All wiring in mechanical rooms at heights below 12 feet must be run in conduit. Otherwise, wiring in all other open areas must have conduit (at all heights). Existing conduit runs where compliant with these specifications may be re-used.

b. All conduits to be installed in a concealed manner where possible and shall be installed parallel to the lines of the building.

c. All exposed conduits shall be installed parallel or at right angles to the building walls or floors.

d. Conduit bends shall be made with standard hickeys of proper size; radius of bends to be at least 6 times the diameter of the conduit. Runs between outlets shall not contain more than the equivalent of three quarter bends. Conduit runs shall be continuous from outlet to outlet, outlet to cabinet, etc.

e. Conduits shall be installed with pitch toward outlet box wherever possible. All heavy wall conduits shall have two locknuts and a bushing at each termination outlet box, junction box, etc., except where terminated in a threaded hub. Fittings on electrometalic tubing shall be compression type.

f. A bushing shall be used where conduit enters a panel box. Bushing for No. 4 AWG or larger shall be insulated type with provisions for grounding as type "BL" made by O-Z Electric Company, or approved equal.

g. Expansion fittings shall be provided at all conduits across the building expansion joints. Fittings shall be Type "AX" or "TX" as made by O-Z Electric Company, or approved equal. Provide copper bonding jumper at each expansion fitting.

h. All ½'' conduit to be supported every 6', the supports will be located at the connector end of the conduit.

i. Exposed conduit shall be securely fastened in place on maximum 5 ft. intervals for 3/4" through 2-1/2 inch nominal sizes. Supports may be

one hole malleable straps or other approved devices. No perforated metal straps will be permitted.

I. Wireway:

1. Furnish and install at all control panel locations a NEMA 1 lay-in wireway system to bring cable into and out of the panel as detailed on the drawings and specified in this section. Furnish 3-way wireways at each panel location: one for Class 1 wiring, 1 for Class 2 and Class 3 wiring. Panels at units to be NEMA 3R or better.
2. Wireway systems at locations where cables are to be run without conduit or in a cable tray shall consist of a connection to the control panel with a vertical extension to 8'-0" or the pipe rack or cable tray level, whichever is higher. The vertical section shall terminate in a 90° fitting with a closure plate. The closure plate shall be provided with a conduit nipple with locknuts and bushings as a wire entry point into the square duct. The conduit nipple shall be one size smaller than the wireway it is associated with.
3. Wireway systems at locations where cables are to be run in conduit shall consist of a horizontal section of wireway with a length equal to the control panel width and located above the control panel and connected to the control panel with three conduit nipples, locknuts, and bushings; one for tubing, one for Class 1 wiring and one for Class 2 and 3 wiring. Conduits for cable runs shall terminate on the wireway.
4. The intent of the wireway configurations outlined above is to provide a method for adding input and output wiring to the control panel without having to drill directly into the electronics enclosure after the system is on-line and running and to provide sufficient area to land field conduits while maintaining appropriate circuit segregation for wire entry into the controller enclosure. The installation of wireway shall be made with this consideration in mind.

J. Hangers and Anchors:

1. Where control system tubing is run on trapezes and/or hangers used by and or installed by other trades, supports for the trapezes shall be coordinated by all trades using the trapeze to assure that the anchor system is not overloaded and is sufficient for the load imposed including a margin of safety and seismic considerations. Under no circumstances shall a trapeze or hanger system installed by the electrical trades be used to support work by any other trade, nor shall the electrical trades use the trapezes installed by any of the other trades for the support of electrical equipment, all as required by the National Electric Code. Similarly, under no circumstances shall a trapeze or hanger system installed by the sprinkler trades be used to support work by any other trade, nor shall the sprinkler trades use the trapezes installed by any of the other trades for the support of sprinkler systems or equipment, all as required by NFPA 13, Standard For The Installation Of Sprinkler Systems.
2. Anchors to be loaded in tension for use in existing concrete structure and anchors loaded in tension and not cast in place shall be epoxy resin set anchors installed per the manufacturers recommendations for technique, size, loading,

embedment, etc. Where anchors are loaded in shear at these locations, suitably sized and installed wedge type anchors may be used.

3. In all cases, anchor loading shall be based on hanger spacing, weight of the pipe to be supported when full and insulated, weight of any additional loads imposed upon the anchor, wind loading, seismic loading, quality of the material that the anchor is being installed in, etc. The Control Contractor shall verify in the field that the anchors used and the materials that they are being installed in are suitable for the load imposed and shall bring any problems to the attention of the Engineer in writing immediately and not proceed without direction from the Engineer.

4. Wedge type anchors shall be Hilti Kwik Bolt II. Adhesive anchors shall be Hilti HVA.

2.03 UNIT CONTROL PANELS (INSTALLATION AND FABRICATION)

A. Enclosed cabinet type with hinged door for mounting all relays, switches, thermometers, and miscellaneous controls not requiring direct mounting on equipment such as sensing elements, valves and damper motors. Provide cabinet for each control unit adjacent to each system.

B. Control panels shall be fabricated to match the approved shop drawings submitted by the Control Contractor. Fabrication shall be in a neat and workmanlike manner and shall facilitate repair, maintenance, and adjustment of the equipment contained therein.

C. Control panels shall be fabricated and laid out to incorporate the following features:

1. Identification of all internally and cover mounted devices. Cover mounted labels shall be engraved labels as specified in this section (5.10). Labels shall be mounted adjacent to the device they are associated with so that replacement of the device does not eliminate the label. Provide laminated control diagram at each panel.

2. Electrical wiring shall enter the panel from the top, bottom, and/or side of the left side of the panel or as required by the panel supplier to meet NEC requirements.

3. All wires entering or leaving the panel shall pass through a rail terminal strip. Where the wires are part of a current loop transmission circuit, the terminals shall be the disconnecting link type. Terminals shall be identified with a number that corresponds to the terminal number on the job wiring diagram. Rail terminal strip specifications include:

a. General: Terminal rail assemblies shall be fabricated from components selected from the product line of one manufacturer. Sizes (heights, widths, and profiles) of each terminal shall be selected to be compatible with the other terminals on the rail. Terminal units located at the end of a rail or adjacent to terminals with a different profile (for example, where disconnecting terminals are located next to resistor terminals) shall be provided with end caps to completely close off the terminal unit interior components from the local environment. End stops shall be

provided for on all rails to secure the terminals located on the rail in place.

4. All internal wiring and tubing shall be run inside plastic wiring/tubing duct as manufactured by Tyton. Wire duct shall be sized to hold the required number of wires and tubes without crimping the tubes and with sufficient space to allow wiring and tubing to be traced during troubleshooting operation.
5. Wires that pass from the panel interior to cover mounted devices shall be provided with a flex loop that is anchored on both sides of the hinge. Wiring running to cover mounted devices shall be bundled using cable ties.
6. Provide strain relief type cord and cable connectors for all cables that leave the panel as individual cables not in conduit.
7. All control panels shall be provided with removable sub panels to allow the panel enclosures to be installed at the job site during rough in while the panels are fabricated off-site for later installation.
8. Where panels are installed in poorly lit spaces provide one under cabinet type fluorescent light with switch mounted internally in the control panel. Panels with external light hoods will also be acceptable if the light will illuminate the panel interior with the door open.
9. Provide one duplex outlet mounted inside the Global Control panel and separately fused with a non-time delay fuse at 15 A at any panel location containing electronic or electrical control components. This receptacle may be served from the control panel 120 VAC power source.
10. Each control panel shall be provided with a control power disconnect switch located and wired so as to disconnect all control power in the panel. The leaving side of this switch shall be wired to the panel and field components through a fuse or fuses sized and applied to protect both the components of the system as well as the wire and as required for code compliance.
11. Power to the following equipment will be have a fuse rated for applicable current and voltage. Fuses will be on rail terminal strips. Equipment includes:
    a. Each control unit
    b. Control devices
    c. Panel light
    d. Receptacle loads (e.g., modems, laptops)
12. All control panels containing electrical equipment shall be NEMA rated for the location in which they are installed. Cover mounted components, tubing penetration, and conduit penetrations shall be made in a manner consistent with the NEMA rating.
13. All wiring leaving the panel shall be separated by classification; i.e., Class 1 circuits shall not be run with Class 2 circuits, etc. Segregation shall be maintained inside the panel to the fullest extent possible. Where low voltage wires carrying low level ac and dc signals cross wires containing power and high level ac signals, the wires shall cross at a 90° angle.

D. Control panels shall be shop fabricated and tested prior to installation in the field. The panels shall be inspected and approved by the Engineer at the assembly location prior

to installation in the field. The Engineer shall be given the opportunity to witness the testing of the panels.

E. Panel Location:

1. Each control panel is to be located for convenient servicing.
2. Mount panels adjacent to associated equipment on vibration isolation.

2.04 CONTROL DAMPER ACTUATORS

A. Damper Actuator Requirements:

1. All damper actuators shall be Belimo electric actuators.
2. Torque rating shall be based on the damper manufacturers operating torque requirements at the design flows and pressure drops or shall be based on the manufacturers required shut-off torque to achieve the design leakage rate, whichever is greater. This higher torque rating shall be doubled. An actuator with this doubled torque rating shall be installed.
3. All damper sections which operate in sequence with each other shall have identical actuators and identical linkage arrangements to assure similar performance between all sections.
4. Modulated actuator operation shall be industry standard 0-10V.
5. Two or three position operation is not acceptable for economizers, multizone dampers, or any other application specifying modulated operation. OSA Dampers to be normally closed, mixed air dampers to be normally open.
6. Spring returns on damper operators are required for OSA application.
7. Actuator quantities for dampers shall be based on the following criteria.
   a. Actuators must be outside unit enclosure.
   b. Actuators shall be installed to maximize the linearity between actuator stroke and actuated devise travel (25% actuator stroke produces approximately 25% of the desired angular rotation required; 50% stroke produces 50% angular rotation). In addition, actuators should be installed to maximize force available for useful work over the entire stroke.
8. Actuators for VAV boxes to be provided to VAV manufacturer for installation at the factory whenever possible.
9. Actuators for VAV boxes are not subject to above specification Section 1, 4, and 5.

2.05 CONTROL VALVES AND ACTUATORS:

A. Provide adequate size and number of modulating or two-position action.

B. Provide positive positioning devices where shown or where sequencing cannot be accomplished by using standard spring ranges.

C. Modulating valve sizing shall be based on the following conditions.

1. Water Valves: Size to closest flow rate but not less than that listed by manufacture.
2. Flow rates for valve sizing shall be based upon the flow rates indicated on the equipment schedules on the drawings.
3. Valves on heating systems to be normally open.

D. Valves where specifically called for Pressure Independent:
1. For flows greater than 9.0 GPM
   a. Designed for equal percentage operation.
   b. Designed for chilled and hot water applications treaded up to 60% with glycol.
   c. End connections per installer requirements.
   d. Pressure Independent operation
   e. Ultrasonic flow sensor for flows up to 90 GPM or Magnetic flow sensor for flow rates greater than 90 GPM.
   f. Cast Iron body for valves 2.5” and larger, nickel plated brass body for 2” and smaller valves and sensor housing. Sensor housing shall be ductile iron for 2.5” and larger valves.
   g. Stainless steel ball and steam with Teflon PTFE seat and characterizing disk. For valves 2.5” and larger characterizing disk may be stainless steel.
   h. Belimo P2 or P6 Series only.
2. For flows less than 9.0 GPM
   a. Designed for equal percentage operation.
   b. Designed for chilled and hot water applications treaded up to 60% with glycol.
   c. End connections per installer requirements.
   d. Pressure Independent operation
   e. Brass body, stainless steel ball and steam with Teflon PTFE seat.
   f. Belimo PIQCV only.
   3. Two position valves shall be the full size of the pipe that they are associated with unless otherwise specified.
4. Two-way valve actuators shall be sized to close off tight against the full pump shut off head on the system upon which they are installed.
5. Valves shall be rated to operate against 200 PSIG differential pressures, ANSI Class IV rated for 0% leakage, 360 PSI rated body, and selected for differential pressure for specific application.

E. Control Valves:
1. Leakage is Zero Percent, Close-off is 200 psi, Maximum Differential is 30 psi. Rangeability is 500:1.

2. Valves ½ inch through 2 inches shall be nickel- plated forged brass body, NPT screw type connections.
3. Valves ½ inch through 1 ¼ inches shall be rated for ANSI Class 600 working pressure. Valves 1 ½ inch and 2 inches shall be rated for ANSI Class 400 working pressure.
4. The operating temperature range shall be 0° to 250° F.
5. Stainless steel ball & stem shall be furnished on all modulating valves.
6. Seats shall be fiberglass reinforced Teflon.
7. Two-way and three-way valves shall have an equal percentage control port. Full stem rotation is required for maximum flow to insure stable BTU control of the coil.
8. Three-way valve shall be applicable for both mixing and diverting.
9. The characterizing disc is made of TEFZEL and shall be keyed and held secure by a retaining ring.
10. The valves shall have a blowout proof stem design.
11. The stem packing shall consist of 2 lubricated O-rings designed for on-off or modulating service and require no maintenance.
12. The valves shall have an ISO type, 4-bolt flange, for mounting actuator in any orientation parallel or perpendicular to the pipe.
13. A non-metallic thermal isolation adapter shall separate valve flange from actuator.
14. One fastening screw shall secure the direct coupling of the thermal isolation adapter between the actuator and the valve. This will prevent all lateral or rotational forces from affecting the steam and packing O-rings.
15. Valve Sizing for Pressure Dependent Water Coil:
    a. On/Off Control Valves shall be line size.
    b. Modulating Control Valve Body Size may be reduced at most two pipe sizes form the line size or not less than half the pipe size. The BAS Contractor shall size all water coil control valves for pressure drop of no more than 3 psi differential pressure.
    c. Valve Mounting Arrangements Shall comply to the following:
        1) Unions shall be provided on all ports of two-way and three-way valves.
        2) Install three-way equal percentage Characterized Control Valves in a mixing configuration with the “A” port piped to the coil.
        3) Install 2 1/2" inch and above, Three-way Globe Valves, as manufactured for mixing or diverting service to the coil.
        4) Two-way Valve shall be piped in the return side of the coil in order to minimize ambient heat at the coil.

F. Valve Actuators:
1. Electronic actuators shall be manufactured by Belimo for all valves.
2. Torque shall be rated at twice the required load.

2.06 SENSORS

A. Shall be manufactured by Johnson Controls, Mamac, Kele, Setra, Veris, or Penn only.

B. All sensing inputs shall be provided industry standard signals.

C. Temperatures, humidities, differential pressure signals, and all other signal inputs shall be industry standard variable voltage or amperage.

D. All signal inputs shall be compatible with the controllers used and with the requirement for readout of variables as specified.

E. If sensors are not linear, then software will linearize sensor output.

F. Controls and sensors for VAV boxes to be provided to VAV manufacturer for installation at the factory.

G. Minimum sensor accuracy (as compared to a test standard) and range are listed in Table. Accuracy is not the same as resolution (the ability of the DDC to measure incremental change). Resolution is specified in "Part 3, DDC Hardware."

1. All accuracy values should be combined effect numbers taking into account thermal drift, interchangeability, hysteresis, etc.

Sensor Type	Range	Min. Accuracy
Duct/Air Handling		
Unit Temperature	40 – 130°F	± 0.5 Degree F
Room Temperature	50 – 85°F	± 1 Degree F
Outside Air Temperature	- 20 to 120°F	± 0.5 Degree F
Chilled Water Temperature	32 – 80°F	± 0.1 to ± 0.5 Degree F
Hot Water Temperature	80 – 220°F	± 0.1 to ± 0.5 Degree F
Water flow	Sized for application	± 5% of reading
Humidity	0 to 100% RH	± 3% RH
Duct Static Pressure	0 to 3″ w.c.	± 1% full scale per 50°F
Space Static Pressure	- 0.25″ to 0.25″ w.c.	± 1% full scale per 50°F
High Limit Static	0-5" w.c.	± 1% full scale per 50ºF
Steam Pressure	Sized for application	± 1% full scale
Current Sensor	Sized for application	± 1% full scale
Power (kWh)	Sized for application	± 2.5% full scale (at 0.5 PF) ± 2% full scale (at 1.0 PF)
Air flow	700 to 4,000 fpm	± 2% full scale
CO_2 sensors	0 to 2,000 PPM	± 3% full scale
Freeze Stat	34ºF to 68ºF	± 1ºF

Sensors shall not drift more than 1% of full scale per year

2.07 TEMPERATURE SENSORS/THERMOSTATS

A. All sensors shall be completely electronic.

B. Duct/ Air Handling Unit type temperature sensor (mixed, discharge/supply, and return air):

1. The probe of the duct sensor shall be 12" in length, and be made of Stainless Steel. Applications where the smallest dimension of the duct is less than 24", the probe shall be sized to reach the center of the duct.
2. Large systems above 9 square feet may require an averaging probe if sufficient mixing of the air stream is not possible.
3. Mount the sensor far enough down stream to allow mixing of the air stream, this is most important on Hot and Cold Deck applications where the coil is placed after the fan.
4. Sensors for mounting on insulated ducts or casings are to be equipped with brackets for mounting clear of the isolation.
5. Do not locate sensors in dead air spaces or in positions with obstructed air flow.
6. Provide separate duct flange for each sensing element.
7. Temperature sensing elements shall be thermally isolated from brackets and supports.
8. Securely seal ducts where elements or connections penetrate duct.
9. Mount sensor enclosures to allow for easy removal and servicing without disturbance or removal of duct insulation.

C. Immersion Type Temperature Sensor:

1. The probe of the sensor shall be constructed of stainless steel and pressure rating consistent with system pressure and velocity.
2. The well shall be constructed of stainless steel and sized to reach into the center of the pipe. Pipes with small diameters shall have the well mounted at a 90 degree elbow to allow sufficient contact with the fluid.
3. Locate wells to sense continuous flow conditions.
4. Do not install wells using extension couplings.
5. Wells shall not restrict flow area to less than 70 percent of line-size-pipe normal flow area. Increase piping size as required to avoid restriction.
6. Provide thermal transmission material within the well.
7. Provide wells with sealing nuts to contain the thermal transmission material and allow for easy removal.

D. Room Type Temperature Sensor:

1. All thermostat locations shall be submitted for approval before installation.
2. Provide sensors in data closets, kiln rooms and other locations where user adjustment is not desired with blank wall plate, vandal-proof covers that are flush with wall. Mamac TE-205-P Series or equal.

3. For all sensors in normally occupied spaces or with CO2 operation provide combination temperature and CO2 sensor. Alerton Ascent Microset series or equal.
3. Match the location of the existing sensor unless noted otherwise.
4. Unless otherwise indicated or specified, provide one discharge and one space temperature sensor for each VAV Terminal Control Unit.
5. Metal guards shall be provided at sensors in the halls, restrooms and gym.
6. Insulation shall be installed between the temperature sensor and open conduit to eliminate false temperature readings due to cold drafts.

E. Outside Air Sensors
1. Outside air sensors shall be designed to withstand the environmental conditions to which they will be exposed. They shall also be provided with a solar shield.
2. Sensor's exposed to wind velocity pressures shall be shielded by a perforated plate that surrounds the sensor element.
3. Temperature transmitters shall be of NEMA 3R construction and rated for ambient temperatures.

F. Averaging Sensors
1. For ductwork greater in any dimension that 48 inches and/or where air temperature stratification exists, an averaging sensor with multiple sensing points shall be used.
2. For plenum applications, such as mixed air temperature measurements, a string of sensors mounted across the plenum shall be used to account for stratification and/or air turbulence. The averaging string shall have a minimum of 4 sensing points per 12-foot long segment.
3. Capillary supports at the sides of the duct shall be provided to support the sensing string.

2.08 AIR PRESSURE SENSORS

A. Static Pressure and Velocity Controllers:
1. Static pressure sensors shall be of either the diaphragm or rigid element bellows, electronic type, photo helic.
2. Each sensor shall be provided with connections, i.e., stop cock and tubing, for attaching a portable pressure gauge.
3. Sensors for mounting on insulated ducts or casings are to be equipped with brackets for mounting clear of the insulation.
4. The transmitter shall be a two-wire type and provide a 4-20 mA signal which is proportional and linear over the calibrated pressure range.
5. The transmitter shall be capable of operating from an unregulated 18-30 VDC power supply.

6. The device housing shall provide 1/4" barbed brass fitting for the connection of the pressure lines. Pressure ranges shall suit the application so that normal operation will occur at mid-range of the sensor span.
7. The location of the indoor measurement shall be remote from doors and openings to the outside, away from elevator lobbies, and shielded from air velocity effects. See Drawings for location.

2.09 TRANSFORMERS

A. Transformers selected and sized for appropriate VA capacity and installed and fused according to applicable Codes.

2.10 CO_2 SENSORS

A. Sensors must retain accuracy for between 3 - 5 years without requiring calibration. Sensors that require annual calibration are not acceptable.
   1. CO_2 sensor output shall be 4 – 20 mA or 2 – 10 VDC proportional over the specified range. Minimum sensor accuracy and range:
   2. The transmitter shall be capable of operating from an unregulated 18 – 30 VDC power supply.
   3. Acceptable Manufacturers: Veris Industries, Johnson Controls.

2.11 POWER MONITORING DEVICES

A. Current Measurement (Amps)
   1. Current measurement shall be by a combination current transformer and a current transducer. The current transformer shall be sized to reduce the full amperage of the monitored circuit to a maximum 5 Amp signal, which will be converted to a 4-20 mA DDC compatible signal for use by the Controls. The status and amperage of all VFD motors for fan and pumps shall be via the VFD. For non-VFD loads use current sensor. Sensors required at all controlled motors.
   2. Current Transformer – A split core current transformer shall be provided to monitor motor amps.
      a. Operating frequency – 50 - 400 Hz.
      b. Insulation – 0.6 Kv class 10Kv BIL.
      c. UL recognized.
      d. Five amp secondary.
      e. Select current ration as appropriate for application.
      f. Acceptable manufacturers: Veris Industries.
   3. Current Transducer – A current to voltage or current to mA transducer shall be provided. The current transducer shall include:
      a. 6X input over amp rating for AC inrushes.
      b. Manufactured to UL 1244.
      c. Accuracy: +.5%, Ripple +1%.

d. Minimum load resistance 30kOhm.

e. Input 0-20 Amps. Where sensors are used to monitor EC motors use a device with 0.5 Amps min. input value to confirm operation.

f. Output 4-20 mA.

g. Transducer shall be powered by a 24VDC regulated power supply (24 VDC +5%).

h. Acceptable manufacturers: Veris Industries.

2.12 TIMER SWITCH

A. Spring wound timer switch with range of 0-12 hours. Intermatic FF Series or equal.

2.13 SURGE PROTECTION

A. All equipment shall be protected from power surges and voltage transients. If failure occurs from surges and transients during the warranty period, then the Contractor shall repair surge protection equipment and other equipment damaged by the failure at no cost to the Owner.

B. Isolation shall be provided at all peer-to-peer network terminations, as well as all field point terminations to suppress induced voltage transients, and shall be consistent with IEEE standards 587-1980.

2.14 FACTORY MOUNTED DEVICES

A. Sensors as required shall be provided by Control Contractor to the manufacturer for installation. All materials and labor beyond this is the responsibility of the Control Contractor.

2.15 WATER FLOW SENSOR

A. Sensing Method: Ultra Sonic.

B. Accuracy: +/-0.5% of reading at calibrated velocity. +/-1% of reading from 0.1 to 40 ft/s.

C. Liquid Operating Temperature: -4 to 140ºF.

D. Analog output.

E. Dynasonics TFX-500W with DTT J/K Series Rail and Sensors.

PART 3 DIRECT DIGITAL CONTROLS – HARDWARE

3.01 SYSTEM ARCHITECTURE

A. Extend existing system for new HVAC systems.

3.02 NETWORK CONTROLLER/SUPERVISOR

A. Retain existing device

3.03 PRIMARY CONTROL UNITS

A. Primary control units are stand-alone units able to control HVAC equipment per the specified sequence of operation.

1. Each controller shall be capable of performing all specified control functions independently. The primary control unit shall directly control all units, fans, and control devices. All control software shall be implemented in the primary control unit. The sequence of operation precisely identifies all points of monitoring and control.
2. Shall monitor specific analog and digital inputs, process the data received, and produce analog or digital outputs to control the systems specified.
3. Systems utilizing controllers that operate in a default mode only as a stand-alone will not be acceptable.

B. Minimum specifications include:

1. Microprocessor-based controllers, fully equipped with power supply, input and output terminals, internal (electronic) timeclock, and self-charging battery backup.
2. Modular multi-tasking microprocessor based direct digital controller with minimum of 1MB of EEPROM and RAM memory.
3. Minimum 10 bit Analog-to-Digital (A/D) converter.
4. Minimum 12 bit Digital-to-Analog (D/A) converter.
5. Sufficient memory for storing 288 trend values for every point (real and virtual).
6. Controllers shall have unused physical points available for future add-ons. The number of spare points shall equal 20% of all physical points (20% AI, 20% AO, 20% BI, 20% BO) or at least two spare points of each type.
7. Shall include all control strategies listed in “Part 4: DDC Software.”
8. Each control loop shall be fully definable in terms of inputs and outputs that are a part of the control strategy.
9. Each control unit shall be equipped with a communication interface connection, minimum of 16 universal analog or digital inputs and outputs, and shall communicate via the LAN to the building level controller.
10. On board power supply for all sensors.
11. On board sockets for plug-in resistors.
12. Each control units shall be capable of proper operation in an ambient environment of between 32°F and 110°F and from 10% to 90% RH.
13. Control units provided for outside installation shall be capable of proper operation in an ambient environment of 0°F to 120°F, and 5 to 95% RH. If such hardware is not available, locate hardware in an accessible indoor location or as approved by the Engineer.
14. Power Failure Protection:

a. All control panels shall be provided with automatic protection from power failure for at least 168 hours.

b. This protection shall, at a minimum, include continuous real-time clock operation, automatic system restart upon power return, and integrity of all volatile point data.

c. Panel outputs shall, at a minimum, be configured to remain in the last commanded state and return to the required state upon restoration of power.

15. Diagnostics: Controller shall continuously perform self-diagnostics, communication diagnosis, and diagnosis of all panel components. The network controller shall provide both local and remote annunciation of any detected component failures, low battery conditions, or repeated failures to establish communication.

16. Power Failure: In the event of the loss of normal power, there shall be an orderly shutdown of all controllers to prevent the loss of database or operating system software. Nonvolatile memory shall be incorporated for all critical controller configuration data, and battery backup shall be provided to support the real-time clock and all volatile memory for a minimum of 72 hours.

a. During a loss of normal power, the control sequences shall go to the normal system shutdown conditions.

b. Upon restoration of normal power and after a minimum off-time delay, the controller shall automatically resume full operation without manual intervention through a normal soft-start sequence.

c. Should a controller memory be lost for any reason, the operator workstation shall automatically reload the program without any intervention by the system operators.

17. Certification: All controllers shall be listed by Underwriters Laboratories (UL).

a. All controllers shall be listed by Underwriters Laboratories (UL).

C. Primary control units shall be installed on:

1. Air handling units greater than 2,000 CFM.

2. Air handling units with VFDs.

3. Any application not listed in secondary and application control units.

3.04 SECONDARY CONTROL UNITS

A. Secondary control units are able to control HVAC equipment per specified by the sequence of operation.

1. Each controller shall be capable of performing specified control functions. The secondary control unit shall directly control all units, fans, dampers and control devices. All control software shall be implemented in the secondary control unit. The sequence of operation precisely identifies all points of monitoring and control.

2. Each controller shall monitor specific analog and digital inputs, process the data received, and produce analog or digital outputs to control the systems specified.

B. Minimum specifications include:

1. Microprocessor-based controllers, fully equipped with power supply, input and output terminals.
2. Modular multi-tasking based direct digital controller with minimum of 2048 bytes of EEPROM and RAM memory.
3. Minimum 8 bit Analog-to-Digital (A/D) converter.
4. Minimum 10 bit Digital-to-Analog (D/A) converter.
5. Controllers shall have unused physical points available for future add-ons. The number of spare points shall equal 20% (20% AI, 20% AO, 20% BI, 20% BO) of all physical points or two spare points whichever is greater.
6. Shall include all control strategies listed in "Part 4: DDC Software."
7. Each control loop shall be fully definable in terms of inputs and outputs that are a part of the control strategy.
8. Each secondary control unit shall be equipped with a USB communication interface connection, minimum of 16 universal analog or digital inputs or outputs, and shall communicate via the LAN to the network front end. Each control units shall be capable of proper operation in an ambient environment of between 32°F and 110°F and from 10% to 90% RH.
9. Control units provided for outside installation shall be capable of proper operation in an ambient environment of 0°F to 120°F, and 5 to 95% RH. If such hardware is not available, locate hardware in an accessible indoor location, in a ventilated control panel or as approved by the Engineer.

C. Secondary control unit. Secondary control units are microprocessor-based devices that are less programmable and will be used on:

1. Small unitary equipment (flow rate less than 2,000 CFM).
2. Fan coil units.

PART 4 DIRECT DIGITAL CONTROLS - SOFTWARE

4.01 SYSTEM SOFTWARE

A. Revise or propagate existing system to new HVAC systems.

PART 5 SYSTEM SETUP

5.01 RESPONSIBILITIES OF INSTALLER AND PROGRAMMER

A. This section further defines the responsibilities of the installer and programmer.

B. The following features shall be incorporated into the final delivered product.

C. System shall allow up to five (5) different remote (wet base) viewers to access and modify data (level 1 access) at the same time.

D. Match District standards for passwords, point naming, alarms, trending, schedules and reports.

5.02 OVERRIDES

A. The DDC system should recognize the override and report to the screen.

B. Software shall have adjustable time limits for each override.

5.03 SAFETY CIRCUITS

A. All safety circuits shall be hard wired circuits with independent manual reset type switches.

5.04 LABELING AND IDENTIFICATION

A. All devices relating to the work or systems included herein, including controllers, valves, motors, relays, etc., shall be identified with a unique identification number or name on the submitted engineering drawings. This identification number or name, along with the service of the device (discharge air controller, mixed air controller, etc.), shall be permanently affixed to the respective device.

B. All field devices will be supplied with a nameplate indicating its name, number, address, and all other pertinent information.

C. If the field device is too small for the nameplate to be "adhered" to or on another piece of equipment near it (e.g., nameplate on air handling unit at wire penetration for mixed air temperature sensor), then attach the nameplate via nylon ties.

D. Tagging shall be computer generated. For input/output wiring, cabling, or tubing, the panel side of the terminals shall be labeled with the automation panel circuit board and terminal numbers associated with the point. The field side shall be labeled with the point number. Cable, wiring and tubing not specifically associated with an input or output shall be labeled with a number and function.

E. All wiring, tubing, and cabling both inside and outside of control panels shall be labeled at both ends using Thomas and Betts EDP printable wire and cable markers using style WSL self-laminating vinyl. Input and output cables and wiring shall be labeled with the point number and the point description, such as:

CPDPS005
Primary Heating Water
Pump #1 On/Off Status

F. Cable and wiring not specifically associated with an input or output shall be labeled with a number and a function description such as:

120 VAC
Panel #

G. Raceway Identification. All the covers to junction and pull boxes of the control system raceways shall be painted blue, or have identification labels stating “Control System Wiring” affixed to the covers. Labels shall be typed, not hand written.

H. Wire Identification. All low and line voltage control wiring shall be identified by a number, as referenced to the associated control diagram, at each end of the conductor or cable. Identification number shall be typed and permanently secured to the conductor or cable. Wiring to all control devices shall be labeled at each end of the conductor with the point name and description.

5.05 INSTALLATION DETAILS

A. Low Differential Air Pressure Applications (Under 5” w.c.) Differential pressure transmitters used for flow measurement shall be sized to the flow sensing device and shall be supplied with Tee fittings and shut-off valves in the high and low sensing pick-up lines to allow the balancing Contractor and Owner permanent easy-to-use connection. Provide a minimum of a NEMA 1 housing for the transmitter. Locate transmitters in accessible local control panels wherever possible. Except on VAV box applications.

B. Medium to High Differential Water Pressure Applications (5” to Over 21” w.c.): Mount stand-alone pressure transmitters in a bypass valve assembly panel. The panel shall be constructed to NEMA 1 standards. The transmitter shall be installed in the panel with hi and low connections piped and valved. Air bleed units, bypass valves and compression fittings shall be provided.

C. Building Differential Air Pressure Applications (-1” to +1” w.c.): Mount pressure transmitter in the local control panel. Transmitters exterior sensing tip shall be installed with a shielded static air probe to reduce pressure fluctuations caused by wind. The interior tip shall be inconspicuous and located within a central corridor shown on the drawings.

D. Outside Air Sensors: Outside air sensors shall be mounted on the North wall to minimize solar radiant heat impact or located in a continuous intake flow adequate to monitor outside air temperatures accurately. Sensors exposed to solar radiation must be installed with solar shields. Sensor’s which are exposed to wind velocity pressures shall be shielded by a perforated plate surrounding the sensor element.

E. Duct Temperature Sensors: Duct mount sensors shall mount in an electrical box through a hole in the duct and be positioned to be easily accessible for repair or replacement. The sensors shall be insertion type and constructed as a complete assembly including lock nut and mounting plate. For ductwork greater in any dimension that 48 inches and/or air temperature stratification exists such as a mixed air plenum, utilize an averaging sensor with multiple sensing points. The sensor shall be mounted to suitable supports using factory approved element holders. For large plenum applications such as mixed air temperature measurements, utilize a string of sensors mounted across the plenum to account for stratification and/or air turbulence. The averaging string shall have a minimum of 4 sensing points per 12 feet long segment.

F. Low Temperature Limit Switches: Mount element horizontally across duct in a serpentine pattern insuring each square foot of coil is protected by 1 foot of sensor. For large duct areas where the sensing element does not provide full coverage of the air stream, provide additional switches as required to provide full protection of the air stream.

PART 6 SYSTEM COMMISSIONING AND TRAINING

AIR AND WATER BALANCING SHALL BE COMPLETED (AND DISCREPANCIES RESOLVED) BEFORE CONTROL CONTRACTOR'S FINAL SYSTEM CHECK AND BEFORE THE ACCEPTANCE TEST TO BE CONDUCTED IN THE PRESENCE OF THE ENGINEER/COMMISSIONING AGENT.

6.01 PRE-COMMISSIONING TESTING, ADJUSTING, AND CALIBRATION REQUIREMENTS

A. Prior to acceptance, the following steps will be used by the Control Contractor to produce a testing and pre-commissioning report by system to be submitted for approval by the Engineer/Commissioning Agent or Owner.

B. Work and/or systems installed under this section shall be fully functioning prior to Demonstration, Acceptance Period and Contract Close Out. Control Contractor shall start, test, adjust, and calibrate all work and/or systems under this contract, as described below:

1. Verify proper electrical voltages and amperages, and verify all circuits are free from grounds or faults.
2. Verify integrity/safety of all electrical connections.
3. Verify proper interface with fire alarm system.
4. Coordinate with TAB subcontractor to obtain control settings that are determined from balancing procedures. Record the following control settings as obtained from TAB contractor (and note any TAB deficiencies):
   a. Minimum outside air damper settings for air handling units and CFM values.
5. Test, calibrate, and set all digital and analog sensing, and actuating devices.
   a. Calibrate each instrumentation device by making a comparison between the DDC display and the reading at the device, using a standard traceable to the National Bureau of Standards, which shall be at least twice as accurate as the device to be calibrated (e.g., if field device is +/-0.5% accurate, test equipment shall be +/-0.25% accurate over same range). Record the measured value and displayed value for each device in the Pre-Commissioning Report.
   b. All analog input points are to be tested by comparing the reading obtained through the workstation and through an independent reading device (meter).
   c. Check each analogue output by making a comparison between the control command at the DDC controller and the status of the controlled device. Check each output point by making a comparison of the state of

the sensing device and the Host computer display. Record the results for each device in the Pre-Commissioning Report.

1) All analog output points are to be tested using a command from the workstation modulating the output in 10% increments and recording the associated voltage/amps sent to the controlled device.

6. Check each digital input/output point by making a comparison between the control command at the DDC controller and the status of the controlled device. Check each digital point by making a comparison of the state of the sensing/control device and the Host computer display. Record the results for each device in the Pre-Commissioning Report.

   a. ON/OFF commands from the workstation should be performed in order to verify its true operation.

7. Check and set zero and span adjustments for all actuating devices. Manually activate damper and valve operators to verify free travel and fail condition. Check valve or damper to insure that it shuts off tight when the appropriate signal is applied to the operator. Adjust the operator spring compression as required. If positioner or volume booster is installed on the operator, calibrate per manufacturer's procedure to achieve spring range indicated. Check split range positioner to verify proper operation. Record settings for each device in the Pre-Commissioning Report.

8. Verify proper sequences of operation. Record results and submit with Pre-Commissioning Report. Verify proper sequence and operation of all specified functions by adjusting input variable to determine if sequence of operation is operating as specified.

9. Tune all control loops to obtain the fastest stable response without hunting, offset or overshoot. Record tuning parameters and response test results for each control loop in the Pre-Commissioning Report. Except from a startup, maximum allowable variance from set point for controlled variables shall be as follows:

   a. Air temperature: ± 0.5 degrees F

   b. Water temperature: ± 1 degrees F

   c. Duct pressure: ± 0.05 inches wc

C. Pre-Commissioning Testing, Adjusting, and Calibration shall be completed prior to Substantial Completion.

D. Provide Pre-Commissioning Test Report for approval by the Engineer/Commissioning Agent or Owner before system demonstration.

6.02 DEMONSTRATION

A. Prior to acceptance, the control system shall undergo a series of performance tests to verify operation and compliance with this specification. These tests shall occur after the Control Contractor has completed the installation, started up the system, and performed its own tests (outlined in 6.1 and to be submitted in writing).

B. The tests described in this section are to be performed in addition to the tests that the Control Contractor performs as a necessary part of the installation, startup, and debugging process. The Commissioning Agent/ Engineer will be present to observe and review these tests. The Commissioning Agent/Engineer shall be notified at least 10 days in advance of the start of the testing procedures.

C. Demonstration shall not be scheduled until all hardware and software submittals, and the Pre-Commissioning Test Report are approved by the Commissioning Agent/Engineer.

D. Verifying compliance of equipment operation and sequence of operation with this specification through all modes of operation.

1. If more than 10 percent of the demonstrated equipment operation and sequence of operation fails to operate per the submittals, the demonstration test will be rescheduled after the Control Contractor takes corrective action.
2. If the Control Contractor fails to demonstrate proper equipment operation and sequence of operation in the second round of tests, the Commissioning Agent/Engineer's costs for witnessing all further demonstration may be assigned to the Control Contractor by the Owner as a deduct to their contracted price. Note: The Control Contractor will not be responsible for costs related to poor design or to other factors beyond their control, though it is expected to call any design concerns and other factors beyond their control that might cause system failure to the attention of the Commissioning Agent/ Engineer and the Owner.

E. Programming changes for correction of improperly programmed sequences will not be considered legitimate reasons for change orders.

F. Demonstration/Commissioning Software:

1. Provide fully licensed copy of the required BAS workstation graphic software to be used by the Commissioning Agent/Engineer on a remote computer (not included in contract) for accessing the BAS network via modem. This software copy shall be used only for the purpose of commissioning this project. The Owner agrees that the commissioning BAS software license shall become null and void upon termination of the Contract Warranty Period. The software shall be returned to the Control Contractor within one year after system acceptance.
2. Software shall be fully configured to view project specific database and shall include trend logs, specified graphic screens, alarms, and reports.
3. Provide assistance by telephone upon request if required to assist Commissioning Agent/Engineer in setting up software on Commissioning Agent/Engineer's remote computer.
4. Submit one complete set of programming and operating manuals for all graphics software packages concurrently with the commissioning software. This set will be returned to the Control Contractor within one year after system acceptance.

G. The Control Contractor shall provide at least two persons equipped with two-way communication, and shall demonstrate actual field operation of each controlled and sensing point for all modes of operation including day, night, occupied, unoccupied, fire/smoke alarm, seasonal changeover, and power failure modes. The purpose is to demonstrate the calibration, response, and action of every point and system. Any test equipment required to prove the proper operation shall be provided by and operated by the Control Contractor.

H. As each control input and output is checked, a log shall be completed showing the date, technician's and Commissioning Agent/Engineer's initials, and any corrective action taken or needed.

I. The system shall be demonstrated following the same procedures used in Pre-Commissioning (Section 6.1)

J. Demonstrate that all points specified and shown can be interrogated and/or commanded (as applicable) from all workstations.

K. At a minimum, demonstrate correct calibration of input/output devices using the same methods specified for the pre-commissioning tests. A maximum of [10] percent of I/O points shall be selected at random by Commissioning Agent/Engineer for demonstration. Upon failure of any device to meet the specified accuracy, an additional [10] percent of I/O points shall be selected at random by Commissioning Agent/Engineer for demonstration. This process shall be repeated until 100 percent of randomly selected I/O points have been demonstrated to meet specified accuracy.

L. The Contractor shall demonstrate that the panels' response to LAN communication failures meet the requirements of these Specifications.

M. Demonstrate that required trend graphs and trend logs are set up per the requirements. Provide a sample of the data archive. Indicate the file names and locations.

N. Demonstrate successful communication of point values between the BAS and other HVAC equipment (e.g., chiller).

O. Demonstrate complete operation of Operator Interface such as graphic screens, trend logs, alarms, etc.

P. Additionally, the following items shall be demonstrated:

1. DDC Loop Response. The Control Contractor shall supply trend data output in a graphical form showing the step response of each DDC loop. The test shall show the loop's response to a change in set point that represents a change of actuator position of at least 25% of its full range. The sampling rate of the trend shall be from 1 second to 3 minutes, depending on the speed of the loop. The trend data shall show for each sample the set point, actuator position, and controlled variable values (e.g., VFD frequency or Amperage). Any loop that

yields unreasonably under-damped or over-damped control shall require further tuning by the Control Contractor.

2. Optimum Start/Stop. The Control Contractor shall supply a trend data output showing the capability of the algorithm. The 5 minute trends shall include the operating status of all optimally started and stopped equipment, as well as temperature sensor inputs of affected areas.

3. Operational logs for each system that indicate all set points, operating points, valve positions, mode, and equipment status shall be submitted to the Commissioning Agent/Engineer. These logs shall cover three 48-hour periods and have a sample frequency of not more than 10 minutes. The logs shall be provided in both printed and disk formats.

4. The DDC and HVAC systems will be shut down for 15 minutes and then re-started. Within 15 minutes, the DDC system shall start and obtain stable control of the HVAC systems without safety trips, alarms, or excessive deviations in temperature and pressure (as defined by the Engineer).

Q. System acceptance shall occur within 120 days of substantial completion. Any delay beyond this period of time shall initiate liquidated dampers unless waived by Owner. Failure or delays on Engineers / Owners part shall not be included in 120 day count.

6.03 ACCEPTANCE

A. All tests described in this specification shall have been performed to the satisfaction of both the Commissioning Agent/Engineer and Owner prior to the acceptance of the control system as meeting the requirements of this document.

B. The system shall not be accepted until all forms and checklists completed as part of the demonstration are submitted and approved.

C. The warranty period starts when the Commissioning Agent/Engineer accepts the system and provides this acceptance in written from the Owner and the Control Contractor.

D. Any tests that cannot be performed due to circumstances beyond the control of the Control Contractor may be exempt from the Completion requirements if stated as such in writing by the Commissioning Agent/Engineer. The Owner shall then perform such tests no later than 3 months after the building is occupied. The costs for these additional tests will be incurred by the Control Contractor.

6.04 SPARE PARTS

A. The Control Contractor shall provide two spare fuses of the correct size and capacity for each fuseholder located in all the installed control systems and the Control Contractor's related equipment.

B. The Control Contractor shall provide two spare pilot lights for each control unit that contains one or more pilot lights.

6.05 TRAINING

A. Training must be on fully operational system, or the training must be repeated when the system is fully operational at no additional cost to the Owner. The Controls Contractor shall provide the following training services:

1. 4 hour session demonstrating the changes to the BAS related to the new HVAC systems.

END OF SECTION

SECTION 23 0993
SEQUENCE OF OPERATIONS FOR HVAC CONTROLS

PART 1 GENERAL

1.01 SUMMARY

A. This section describes the sequence of operations for HVAC control systems specified elsewhere in these specifications.

B. Related Work: The requirements of Section 23 0500, Common HVAC Materials and Methods, also apply to this Section.

PART 2 PRODUCTS

2.01 NO PRODUCTS LISTED FOR THIS SECTION

PART 3 EXECUTION

3.01 SEQUENCE OF OPERATIONS

A. Provide a complete and operational temperature control and building automation system based on the following points and sequence of operation, complete as to sequences and standard control practices. The determined point list is the minimum amount of points that are to be provided. Provide any additional points required to meet the sequence of operation.

B. Object List:

1. The following points as defined for each piece of equipment are designated as follows:
   a. Binary Out (BO) - Defined as any two-state output (start/stop) (enable/disable), etc.
   b. Binary In (BI) - Defined as any two-state input (alarm, status), etc.
   c. Analog In (AI) - Defined as any variable input (temperature) (position), etc.
   d. Analog Out (AO) - Defined as any electrical variable output. 0–20mA, 4–20mA, 0–10VDC are the only acceptable analog outputs. The driver for analog outputs must come from both hardware and software resident in the controllers. Transducers will not be acceptable under any circumstance.

C. Occupancy and Performance Time Periods:

1. Occupied Period is signaled automatically by adjustable settings at DDC server, Building Controller, Application Controller and also, at each zone when zone bypass timer is activated.

2. Warm-up period occurs one hour before occupied start time or as calculated by Building Controller based on system performance history and outside air temperature.
3. Unoccupied period occurs whenever Occupied, Warm-up, and Cool-down are not in effect.

PART 4 SEQUENCE OF OPERATION

4.01 LEVEL OF DETAIL

A. Major changes in provided sequence of operation must be approved of in writing by the Owner and the Engineer.

B. The Control Contractor shall provide two types of documentation for each system (e.g., boiler plant, VAV system, etc.). The two types of documentation include:

1. Control Logic
   a. Control logic shall be a series of statements providing, for each system, the following items:
      1) Identification of control process
      2) Narrative of control loop or logic algorithm
      3) Control parameters such as setpoints and differentials (e.g., throttling range, gains) reset schedules, and adjustable parameters for all points
      4) Identification of all constraints, limits, or interlocks that apply to control loop
      5) Identification of all DO, DI, AO, AI points that apply to system
      6) Identification of all communication needs (data points from outside control unit)
2. Logic Diagrams
   a. For each control logic system, a logic diagram shall show the actual interaction of the points (real and virtual) and the logic algorithm.
   b. The diagram should identify
      1) System being controlled (attach abbreviated control logic text)
      2) All DO, DI, AO, AI points
      3) Virtual points
      4) All functions (logic, math, and control) within control loop
      5) Legend for graphical icons or symbols
      5

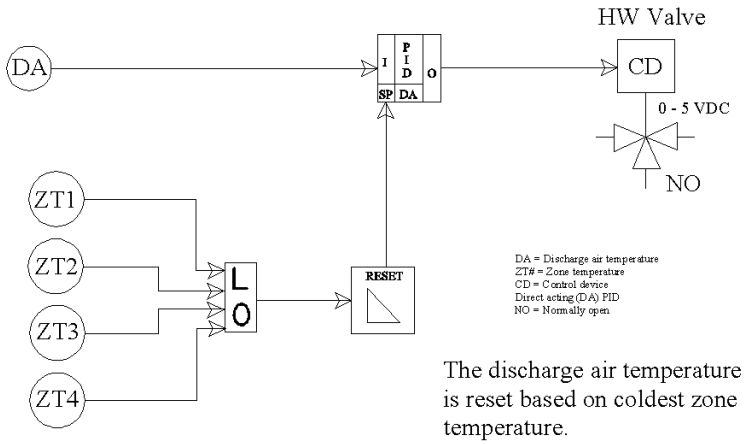

4.02 STANDARDIZATION

A. All control loops will be standardized throughout the programming code.

4.03 PROGRAMMING GUIDELINES

A. All adjustable setpoints shall be developed as software points stored at memory locations so that setpoints can be changed by recommending the data stored at the memory location rather than by entering the program and changing parameters and lines in program code.

B. Where reset schedules are specified or required the schedules shall be set up so that the operator enters the following points into memory locations.

1. Two points for the independent variable on the reset schedule.
2. Two points for the dependent variable on the reset schedule.

The computer system shall then use these values as input parameters to the appropriate program or programs and calculate the reset schedule based on these values.

C. Where several analog outputs are to be controlled in sequence by one control loop, software shall be arranged so that the sequence is guaranteed regardless of the spring range of the actuators and to prevent simultaneous heating and cooling.

D. Programs controlling several pieces of equipment as one system shall reside in one control unit. Where programs use data points that reside in other control units the programs shall employ logic (either in software, firmware, hardware, or a combination of all three) to detect loss of communications with the remote control units containing

the required data. When such a failure is detected, the program logic shall revert to a safe operating mode that will allow the controlled systems to remain in operation until normal system communication resumes. A pilot light on the control unit shall be illuminated when such a failure mode exists. In addition, an alarm shall be sent to the HOST computers (alarm level 4). The software shall track this type of alarm and report if communication failure is higher than expected (this condition shall generate an alarm level 3, with descriptive text, at the HOST computer). All safe operating modes shall be approved by the Engineer prior to implementation.

E. Control sequences that use outdoor air conditions to trigger certain specific operating modes shall use data generated by one outdoor air temperature sensor and one outdoor humidity sensor. In other words, the data from one pair of sensors shall be shared by the entire system.

F. All safety circuits shall be hard wired circuits using standard snap acting electric or pneumatic switches as required by the function, and shall be totally independent of the DDC system controllers. This includes interlocks that return dampers and valves to some normal, fail-safe position when the system they are associated with shuts down. It is the intent of this paragraph that the systems have the capability to be operated manually complete with safeties and fail safe interlocks even if the DDC system is off line.

G. Provide hours of operation accumulation and lead/lag sequencing of equipment based on hours of operation for all equipment with proof of operation inputs.

H. Global point name changing:

1. The system shall provide an easy means to allow the operator to change a point name such that the point will automatically be referenced everywhere in the system by the new name.
2. If a point name is removed from the database, any program code where the name appears must show an appropriate error signal for undefined point when the program is viewed, edited, or printed.

I. Synchronization of real-time clocks between all control panels shall be provided.

4.04 GENERAL SEQUENCE OF OPERATION GUIDELINES

A. Control of all central fan systems, boilers, DX units, heaters, and pumping stations shall be based on run requests, heating requests or cooling requests from zone controls.

B. Reset of supply air temperature and hot water temperature shall be based on zone temperature conditions via the zone's percentage of heating or cooling load.

C. Unless otherwise indicated, all control loops will use PID loops. The coefficient for the derivative component is zero (0) unless otherwise indicated.

D. All HVAC system controls shall be designed such that simultaneous heating and cooling, reheating, and recooling are minimized. This applies as well to non-mechanical

treatment of mixed air (e.g. outside air, heat recovery, etc.) which must then be mechanically reheated or recooled.

E. Alarms: Except as directed otherwise by the Owner, all alarms will be registered at the building operator's terminal as well as at the Maintenance Building remote operator's station. Alarms are to be registered with a message explaining the nature of the alarm and which building/location the alarm is in.

F. Whenever a set-point is referred to as "adjustable" in these standards, the set-point is to be easily and directly adjustable at the operator's terminal and Maintenance Building remote operator's station, and is not to require any code modification. This may require assigning virtual points to all adjustable set-points. Frequently adjusted points, including space temperature set-points, shall be adjustable from the graphics screen (e.g., floor plan screen).

G. There are many interlocks and limits within each control loop or algorithm that may not be obvious or stated in this specification. The Control Contractor is responsible for identifying and programming these interlocks and limits into the software. The CO_2 Demand Ventilation Control algorithm is a good example of the complexity of the control loop with interlocks and limits.

H. The Control Contractor will replace any and all equipment (actuators, chillers, etc.) that fail due to programming errors. Such errors include, but are not limited to: moving actuators a couple fractions of a degree every second or so in response to some infinitesimal change in a measured variable or repeatedly turning equipment on/off within a short time period. The Control Contractor will avoid these problems by incorporating time delays, dead bands, and other programming techniques into the sequence of operation.

I. Programmable time-of-day (start/stop) control shall be implemented for all HVAC equipment, except for:

1. Equipment that is interlocked with other equipment under direct start/stop control (e.g. exhaust fans interlocked with an air handling unit).
2. Equipment that must run continuously for reasons of safety.
3. As otherwise noted in these standards.

J. Auto-tuning algorithms will not be used to initially tune control loops.

4.05 SEQUENCE OF OPERATION GUIDELINES

A. This specification is intended to refine or elaborate on the sequence of operations provided by the Engineer. Note: there are many issues that may make any of these standard sequences inapplicable to a specific situation: thus, the Control Contractor should obtain written approval by the Engineer to implement the sequence of operations contained in this specification.

B. The Control Contractor shall adhere to all applicable specifications, unless they submit written exceptions to the Owner and Engineer and such exceptions are approved in writing. Written exceptions shall state the specification's sequence of operations, the Control Contractor's proposed sequence of operations, and the reasons why the proposed sequence specifications are preferable to the sequences in this specification or those provided by the Engineer.

C. It is the Control Contractor's responsibility to improve upon these specified sequences of operations if necessary. All improvements will be provided in writing to the Engineer for his/her written approval.

D. The Control Contractor is responsible for accurately controlling and communicating with all packaged fan units or air handling units.

4.06 SEQUENCE OF OPERATION – SCHEDULING

A. The system will have the three (3) schedules that will be utilized based on the type of event selected by the building operator. The operator will be able to select the desired schedule to be actively used and select the equipment group to be associated with each schedule (equipment selection is user adjustable).

B. Occupancy Override: The building operator shall be able to initiate occupancy (occupied operation) from the building operator's workstation (overriding any non-occupied sequences) for each individual air handling system. Override will last for eight (8) hours (adjustable) and then revert back to the current operating mode. Operator will be able to release override at any time during the override period.

C. The building operator will be able to command start of occupancy at the operator's terminal and at the Maintenance Building remote operator's station (overriding the optimal start sequence) for each individual air handling system and globally for all air handling systems in the building.

4.07 SPACE TEMPERATURE SETPOINTS

A. Default Set-points:

1. Occupied Heating Set-point: 70 °F (adjustable)
2. Occupied Cooling Set-point: 75 °F (adjustable)
3. Unoccupied Heating Set-point: 55 °F (adjustable)
4. Unoccupied Cooling Set-point: 85 °F (adjustable)

B. Space Set-point Adjustment:

1. Adjustment (General): Set-point adjustments may be accomplished either at the operator workstation or locally at the thermostat.
2. Adjustment Range: Set-point adjustments are limited to (+/-) 2°F (adjustable). Space temperature dead band (4 °F, adjustable) is maintained during set-point adjustments.

4.08 MISCELLANEOUS

A. Exhaust Fans:

1. Time out room Exhaust: Operate based on roof temperature. Enable with schedule for HVAC unit that serves adjacent classroom.
2. Pressure Relief Fans: Operate based on the average OSA damper position of all AHUs in the associated room plus a bias factor. The intention is to modulate the fans to maintain the mechanical mezzanine spaces at a slightly positive pressure (0.02" WC +/- 0.01" WC). Balancer to assist in developing bias (or offset) factor.

B. Fin Pipe Heaters: Operate in conjunction with heating coil at air handler that serves the same room. Operate when heating valve is 5% (adj.) or more open. Do not operate unless heating valve is open.

C. Smoke Detectors: If smoke is detected by duct mounted smoke detector, disable operation of fan system. Enable when alarm is cleared. Report to BAS interface as an alarm.

D. Unit Heaters, Cabinet Unit Heaters and Convectors: Operate from sensor in space to maintain space temperature during occupied and non-occupied spaces. For units with fans cycle the fan with the demand for heat.

4.09 SEQUENCE OF OPERATION – SINGLE ZONE WITH CONSTANT AIRFLOW

A. Supply Fan Control: Operate during occupied mode, OSS, NLL, NHL, Night Purge sequences.

B. Fan Enable / Optimal Start Control or Warm-Up Mode:

1. All fan systems with heating capability shall have this sequence.
2. The intent of this sequence is that the air handling system be started early enough so that the maximum negative deviation of space temperature from the occupied heating set point (for all within the system) is less than 0.5 °F no more than 20 minutes prior to or 10 minutes after scheduled occupancy. Space should not be heated up above occupied heating space temperature set points.
3. Air handling systems may be started under the optimal start mode no more than 3 hours (adjustable) prior to scheduled occupancy.
4. This optimal start sequence will be locked out when the 3 hour rolling average outdoor air temperature is greater than setpoint (initial setpoint, 55°F, adjustable). If locked out, the AHU will start 10 minutes (adjustable, maximum of 30 minutes) before occupied time period.
5. Air handling systems will be started as a function of:
   a. Outdoor air temperature
   b. Space temperature
   c. Time until start of scheduled occupancy

d. Historical time period required to reach setpoint as a function of a, b, and c above.

6. Discharge air temperature setpoint will be set to the maximum optimal start temperature setpoint (110°F, adjustable) during this mode.
7. When the system is in heating optimal start mode, the mixed air dampers will be in full recirculation mode (i.e., outside air dampers are fully closed and the supply air volume will be limited to the return volume).
8. Exhaust fans are off and exhaust dampers are closed.
9. Mechanical cooling is disabled.
10. The building operator will be able to command start of occupancy at the operator's terminal and at the Maintenance Building remote operator's station (overriding the optimal start sequence) for each individual air handling system and globally for all air handling systems in the building.

D. Heating Valve Control:

1. Occupied Mode: Heating valve to modulate to maintain space temperature heating setpoint subject to discharge air temperature limiting.
2. Night Low Limit, Optimal Start and Low Limit Freeze Conditions: Heating valve shall modulate fully open.
3. Unoccupied, Night Purge, and Night High Limit Mode: Heating valve to modulate fully closed.
4. Heating Valve Lockout: Heating valve shall not modulate when the outside air temperature is above 65ºF (Adjustable).
6. Considerations: Modulating the heating valve simultaneously with cooling valve and economizer operation is not permitted except during demand ventilation control. Oscillation between heating valve, cooling valve and economizer operation is also not permitted.
7. DAT limitations: Do not allow DAT to drop below 65 Deg. F. (adj.) if OSA temperature is below 50 Deg. F. (adj.). The intension is to avoid dumping cool or cold air on occupants even if space set-point is being maintained.

E. Cooling Valve Control:

1. Occupied, Occupied Purge Mode: Cooling valve to modulate to maintain space temperature setpoint subject to discharge air temperature limiting.
2. Unoccupied, Night Low Limit, Night High Limit, Optimal Start, Night Purge and Low Limit Freeze Modes: Cooling valve to modulate full closed.
3. Low Limit Control: If the minimum hourly outside air temperature is less than 32ºF (adjustable) and the system is unoccupied, modulate cooling valve fully open. Also see cooling system sequences regarding this sequence.
4. Cooling Valve Lockout:
   a. Cooling valve shall not modulate when the outside air temperature is below 55ºF (Adjustable).
   b. If economizer operation is enabled cooling valve operation is not allowed until economizer is at 100% for five (5) minutes. Economizer to

maintain 100% while cooling valve is operational unless it is disabled based on return air.

5. Considerations: Modulating the cooling valve simultaneously with the heating valve operation is not permitted. Oscillation between heating valve and cooling valve modulation is also not permitted.
6. Discharge Air Temperature Limits:
   a. Discharge Air Temperature High Limit Set Point: 85ºF (Adjustable).
   b. Discharge Air Temperature Low Limit Set Point: 53ºF (Adjustable).

F. Night Low Limit Mode:
1. Night low limit mode is initiated during unoccupied times (mode), when any terminal unit space temperature(s) falls below the unoccupied heating setpoint.
2. The night low flag will start boiler sequence.
3. The fan will delay starting until there is sufficient heat to run the unit without tripping a safety to lockout.
4. The NLL valve position will be 100 percent.
5. The unit will operate until the Unoccupied heating SP is reached plus a 3˚deadband is reached. The fan will have a 10 minute (Adj) off delay.
6. Sufficient heat for hot water systems: Sufficient heat will be met when HWST is 10 deg less than the active HWST set point reset.

G. Night High Limit Mode:
1. Night high limit mode is initiated during unoccupied times (mode), when the space temperature(s) rises above the unoccupied cooling setpoint and the outside air temperature is 10°F (adjustable) less than the average space temperature.
2. When all spaces served by the system are below the unoccupied heating setpoint minus the dead band setpoint (initial 5°F, adjustable), the system will revert to the unoccupied mode.

H. Night Purge Mode:
1. This sequence is initiated before occupancy during the cooling season.
2. Night purge will be enabled when the following conditions are true:
   a. The space temperature is above 80º F (adjustable).
   b. Outside air temperature is greater than setpoint (initial setpoint, 45°F, adjustable).
   c. Outside air relative humidity is less than 50%.
   d. Outside air temperature is at least 10°F (adjustable) less than the average space temperature.
   e. Occupancy period occurs within 3 hours (adjustable).
3. Night purge will be disabled when average space temperature is within 3°F (adjustable) of the outside air temperature or the average space temperature has reach the occupied heating set point.

I. Economizer Damper Control:

1. Occupied Mode: Economizer dampers (Outside Air, Return Air and Relief Air) modulate to maintain supply air temperature set point and air quality setpoint.
2. Unoccupied, Night Low Limit, Optimal Start and Low Limit Freeze Conditions: Dampers to modulate to full recirculation (0% Outside Air).
3. Night High Limit and Night Purge: Dampers to modulate to full ventilation (100% Outside Air).
4. The outside air damper will be at minimum position during occupied mode unless another sequence (economizer cooling, CO2 control, or any safeties) require a different position.
5. The economizer cooling function will be enabled when the OSA is 3˚F (adj) less than return air temp and disabled when OSA equals RAT. lf there is no return air temperature sensor available, space temp will be used for comparison.
7. Demand Ventilation Control (DVC): During occupied mode the outside air dampers shall modulate to maintain return air CO2 levels at or below 900 PPM (adj.). DVC shall occur when levels begin to exceed the CO2 set point plus a dead-band of 100 PPM (adj.).
8. Economizer Minimum Position (Air Quality Control): Economizer minimum-minimum (min-min) position value is based on 25% of the minimum ventilation requirement unless otherwise noted. The economizer minimum-maximum (min-max) position is based on the full minimum ventilation requirement. During DVC sequences, outside air damper position (outside airflow) is limited to the min-max setting. Balancer to determine actual damper positions at the min-min and min-max airflow setpoints. Control system shall use damper position setpoints (value given rather than confirmed position as damper position switch or feedback device is not required for this sequence) for control purposes. Based on 900 PPM with dead-band of 100 the OSA damper will modulate up to min-max position on CO2 levels above 1000 PPM and will modulate to min-min once CO2 level is below 800 PPM.
9. CO2 sensor fail:
   a. lf the CO2 goes below 200 PPM or above 1600 PPM and remains at that level for 30 min (adj), the sensor is assumed to have failed and the CO2 control will be disabled and an alarm generated.
      1) A faulted sensor will revert to a fixed min OAD setpoint adjustable from the graphics.
   b. There will be a manual reset on graphics after CO2 controls are repaired.

4.10 BOILER OPERATION

A. Isolation valve at each boiler shall be operated by the boiler control system. Otherwise the boiler system operates per SOO installed in previous phase.

4.11 SEQUENCE OF OPERATION - CHILLER

A. Disable on signal outside air temperature is below 55º F (Adj.).

B. Enable on building time signal.

C. Start and operate chilled water pump on signal that any two (adj.) chilled water valves are open more than 5%. Chiller shall also be allowed to operate if only AHU-9 chilled water valve is open.

D. Start and verify pump operation prior to starting chiller.

E. Operate Pump VFD to Maintain:
   1. Minimum pressure at remote differential pressure sensor.
   2. Minimum flow through chiller.

F. Operate Chiller to Maintain Discharge Temperature per Schedule: On any (adjustable) valve open 100% for 5 minutes reduce chilled water setpoint by 2º F. On all valves open less than 75% (adjustable) increase chilled water setpoint by 2º F. Reset between 44º F and 48º F. Min. run time and min. off time of chiller between run time shall be 10 min. (adj.).

G. Operate chilled water pipe heat trace freeze protection on outside air temperature below 38º F.

H. Pump Lead/Lag: Operate pumps based on lead/lag. On failure of lead pump, operate lag pump and send alarm. Switch lead operation every week. Lead selection shall also be selectable from the operator's workstation, resetting the current run-time when used. When switching from lead pump to lag pump allow both pumps to operate a minimum of fifteen (15) seconds before disabling the lead pump. Both pumps must operate for full chilled water flow rate of the system.

I. Note that the chiller system operation does not change unless the Alternate #1 is exercised. The chiller pump system SOO does not change from that programmed in previous phase. However the min. flow set point may need to be revised.

END OF SECTION

SECTION 23 2100
HYDRONIC PIPING AND PUMPS

PART 1 GENERAL

1.01 DESCRIPTION

A. The requirements of this section apply to the HVAC heating and cooling water systems. Provide pipe, pipe fittings, pumps, and related items required for complete piping system.

B. Related Work: The requirements of Section 23 0500, Common HVAC Materials and Methods, also apply to this section.

1.02 QUALITY ASSURANCE

A. General: ASTM and ANSI Standards are indicated. In addition, special standards are referenced where neither ASTM nor ANSI Standards are applicable.

B. Labeling: All piping shall be continuously and legibly labeled on each length as required by codes and standards and including as a minimum, country of origin, manufacturers identification marking, wall thickness designation, and applicable standards and approvals. Fittings shall be labeled as required by the referenced standard.

C. Concealed Plastic Piping: No concealed plastic piping inside the building unless approved by Code or Governing Authorities.

D. Definitions: Where piping fluid is not indicated in the following paragraphs, provide similar piping materials for similar fluids.

E. To assure uniformity and compatibility of piping components in grooved piping systems, all grooved products utilized shall be supplied by a single manufacturer. Grooving tools shall be supplied from the same manufacturer as the grooved components.

1. All castings used for coupling housings, fittings, and valve bodies shall be date stamped for quality assurance and traceability.

F. See Commissioning specification for additional requirements.

1.03 STORAGE AND HANDLING

A. Provide factory-applied end caps on each length of pipe and tube. Maintain end caps through shipping, storage and handling as required to prevent pipe-end damage and eliminate dirt and moisture from inside of pipe and tube. Protect flanges and fittings from moisture and dirt by inside storage and enclosure, or by packaging with durable, waterproof wrapping.

1.04 SUBMITTALS

A. Submit catalog data, construction details, and performance characteristics for all equipment.

B. Submit operating and maintenance data.

PART 2 PRODUCTS

2.01 PIPING MATERIALS

A. Black Steel Pipe:
   1. Applications:
      a. Heating & chilled water
   2. Pipe: Schedule 40, standard black steel pipe ASTM A-106 or A-53.
   3. Threaded Fittings: For above ground installations only.
      a. Banded class 120 cast iron fittings, ANSI B16.4 to 125 psi.
   4. Welding Fittings: Beveled ends, seamless fittings of the same type and class of piping above.
   5. Flanged Fittings: For above ground installations only.
      a. Class 125 cast iron fittings, ANSI B16.2 including bolting to 125 psi.
      b. Facing and Gasketing: Selected for service pressures and temperatures. Full-faced for cast iron and raised face for steel flanges.

B. Black Steel Pipe:
   1. Applications:
      a. Chilled water above grade
      b. Heating water above grade
   2. Pipe: Schedule 40, standard black steel pipe ASTM A-106 or A-53.
   3. Fittings: Cold Press Mechanical Joint Fitting shall conform to material requirements of ASTM A420 or ASME B16.3 and performance criteria of IAPMO PS117. Sealing elements for press fittings shall be EPDM. Sealing elements shall be factory installed or an alternative supplied by fitting manufacturer. Press ends shall have Smart Connect® feature design (leakage path). MegaPress fittings with the Smart Connect feature assure leakage of liquids and/or gases from inside the system past the sealing element of an unpressed connection. The function of this feature is to provide the installer quick and easy identification of connections which have not been pressed prior to putting the system into operation.
   4. Pipe Thread: Pipe Threads shall conform to ASTM B16.3.
   5. Hangers and supports: Hangers and supports shall conform to MSS SP 58.
   6. Hanger spacing: In accordance with ASME B 31.1, NFPA54, UPC, IMC other National or local codes.
   7. Source Quality Control:
      a. Fittings shall be listed and approved for their intended application.
      b. Manufacture shall be Viega MegaPress or approved.

C. Black Steel Pipe:

1. Applications:
   a. Chilled water
   b. Heating water
2. Pipe: Schedule 40, standard black steel pipe ASTM A-106 or A-53.
3. Mechanical Couplings for Joining Carbon Steel Pipe.
   a. Standard Mechanical Couplings, 2 inch (DN50) through 12 inch (DN300): Manufactured in two segments of cast ductile iron, conforming to ASTM A-536, Grade 65-45-12. Gaskets shall be pressure responsive synthetic rubber, grade to suit the intended service, conforming to ASTM D-2000. (Gaskets used for potable water applications shall be UL classified in accordance with ANSI/NSF-61 for potable water service.) Mechanical Coupling bolts shall be zinc plated (ASTM B-633) heat treated carbon steel track head conforming to ASTM A-449 and ASTM A-183, minimum tensile strength 110,000 psi (758450 kPa).
      1) Rigid Type: Coupling housings with offsetting, angle-pattern bolt pads shall be used to provide system rigidity and support and hanging in accordance with ANSI B31.1, B31.9, and NFPA 13. Basis of Design: Victaulic Style 07.
         a) 2” (DN50) through 8” (DN200): Installation ready rigid coupling for direct stab installation without field disassembly. Gasket shall be Grade “EHP” EPDM compound with red color code designed for operating temperatures from -30 deg F (-34 deg C) to +250 deg F (+120 deg C). Basis of Design: Victaulic Style 107H.
      2) Flexible Type: Use in locations where vibration attenuation and stress relief are required. Flexible couplings may be used in lieu of flexible connectors at equipment connections. Three couplings, for each connector, shall be placed in close proximity to the vibration source. Basis of Design: Victaulic Style 77.
         a) 2” (DN50) through 8” (DN0200): Installation ready flexible coupling for direct stab installation without field disassembly. Gasket shall be Grade “EHP” EPDM compound with red color code designed for operating temperatures from -30 deg F (-34 deg C) to +250 deg F (+120 deg C). Basis of Design: Victaulic Style 177.
   b. Flange Adapters: For use with grooved end pipe and fittings, flat faced, for mating to ANSI Class 125 / 150 flanges. Basis of Design: Victaulic Style 741.
   c. Grooved couplings shall meet the requirements of ASTM F-1476.
   d. Gasket: Synthetic rubber conforming to steel pipe outside diameter and coupling housing, manufactured of elastomers as designated in ASTM D-2000.
4. Grooved End Fittings:

a. Standard fittings shall be cast of ductile iron conforming to ASTM A-536, Grade 65-45-12, forged steel conforming to ASTM A-234, Grade WPB 0.375" wall (9,53 mm wall), or factory-fabricated from Std. Wt. Carbon Steel pipe conforming to ASTM A-53, Type F, E or S, Grade B. Fittings provided with an alkyd enamel finish or hot dip galvanized to ASTM A-153. Zinc electroplated fittings and couplings conform to ASTM B633.

b. Fittings shall be manufactured of ductile iron conforming to ASTM A-536, forged carbon steel conforming to ASTM A-234, or factory fabricated from carbon steel pipe conforming to ASTM A-53. Fittings shall be manufactured to the dimensional standards ASME B16.9. Orange enamel coated or galvanized.

5. Tooling: Tools shall be manufactured and supplied by pipe fitting manufacturer. Use roll sets or cut groovers compatible with the pipe material and wall thickness per installation instructions.

6. Approved Manufacturers: Victaulic. For alternate manufacturers, see other end treatments listed above.

D. Copper Pipe and Tube:

1. Application:

a. Heating water in boiler room or mechanical rooms.

b. Chilled water.

c. Cooling coil condensate drain

2. UPC approved copper fitting with EPDM o-ring.

3. Press fit connection.

4. Viega Pro Press approved.

E. Copper Pipe and Tube:

1. Application:

a. Heating & chilled water

b. Cooling coil condensate drain

2. Pipe: Type L hard temper copper with brazed or soldered joints, ASTM B88. Brazing required for 2" and larger lines.

3. Fittings: Wrought copper solder-joint fittings, ANSI B16.22.

2.02 MISCELLANEOUS PIPING MATERIALS/PRODUCTS

A. Insulating (Dielectric) Fittings: Do not use. See Section 3.2, G.

B. Welding Materials: Provide welding materials as determined by the installer to comply with installation requirements.

C. Soldering and Brazing Materials: Provide soldering materials as determined by the installer to comply with installation requirements.

1. Tin-Antimony Solder: ASTM B32, Grade 95TA.

2. Lead-Free Solder: ASTM B32, Grade HB. Harris "Bridgit" approved.
3. Silver Solder: ASTM B32, Grade 96.5TS.

D. Gaskets for Flanged Joints: ANSI B16.21; full-faced for cast-iron flanges; raised-face for steel flanges. Pressure and temperature rating required for the service indicated.

E. Strainers: "Y-pattern," ductile iron or bronze body (depending on pipe system) rated for pressures indicated with blow-off connection and 20 mesh stainless steel screen or perforated metal basket with 1/16" or 1/8" openings. Basis of Design: Victaulic Style 732.

F. Hot Water and Chilled Water Valves up to 12": Model #'s listed are Nibco unless noted otherwise. Aproved equal are Watts, Hammond, Appollo, and Victualic.
1. Ball (to 2"):
   a. Two-piece, cast bronze body, full port, 600 psi WOG, T/S 585-70.
   b. Two-piece, forged brass body, standard port, 300 psi, Victaulic Series P589.
2. Butterfly: Ductile iron body, electroless-nickel coated ductile iron aluminum bronze disc, 300 psi WOG, pressure responsive elastomer seat, and stainless steel stem that is offset from the disc centerline to provide complete 360-degree circumferential seating, suitable for water temperatures to +250 degrees F. Lugged body – LD-2000, Wafer body – WD-2000, Grooved body – Victaulic Vic300 MasterSeal.
3. Check: Bronze or ductile iron body, spring-assisted swing check, 300 psi WOG, T/S-413B and F-918B, Grooved body – Victaulic Series 716.

2.03 HEATING WATER SPECIALTIES

A. Air Vents: Install at all system high points whether shown or not;
1. At all locations not in mechanical rooms use manual air vents.
2. At mechanical rooms fabricate of 2" diameter or larger pipe at least 12" long. At the high point of each main install an Armstrong No. 1AV autovent, or equivalent

   Bell & Gossett, Armstrong, Dunham-Bush approved substitute. Route discharge line to over floor sink.

B. Flow Control Valve:
1. Install where shown on plans, flow metering fittings complete with quick disconnect, flow meter valves, with safety shut-off valves and with size and series identification tags. Install as recommended by manufacturer, Victaulic, Griswold, Pro-Hydronic Specialties or approved substitute.
2. Valves shall be dynamic flow limiting devices sized to the nearest 0.5 gpm. Stainless steel cartridge and spring with body and ends to match piping system.
3. Unless noted otherwise all flow control valves are flow limiting not balancing valves.

C. Circuit Setter and Balancing Valves: Globe style with calibrated handle style balancing fitting with differential pressure taps, brass or bronze body and trim. TA Hydronics STAD series, or equal Nexus, Wheatley or approved substitute. Valves shall only be used where specifically called out for balance valve, otherwise use flow control valve.

2.04 EXPANSION JOINT

A. Stainless steel bellows type with flanged ends, controlled flexing, internal liner rated at a minimum of 28,000 average life cycles. Provide amount of expansion indicated at each joint as shown on Drawings. Carefully align joint and make proper allowance for temperature of pipe at time of installation. Flexonics, Hyspan, or approved substitute.

B. Multiple grooved flexible fittings per 2.1 C-3a-2 are allowed if installed per manufacture guidelines.

2.05 HYDRONIC COILS FOR INSTALLATION IN EXISTING UNITS

A. Certification: Acceptable water coils shall be certified in accordance with AHRI Standard 410 and bear the AHRI label. Coils exceeding the scope of the manufacturer's certification and/or the range of AHRI's standard rating conditions will be considered provided the manufacturer is a current member of the AHRI Forced Circulation Air-Cooling and Air-Heating Coils certification programs and that the coils have been rated in accordance with AHRI Standard 410. Manufacturer must be ISO 9002 certified.

B. Headers shall consist of seamless copper tubing to assure compatibility with primary surface. Headers to have intruded tube holes to provide maximum brazing surface for tube to header joint, strength, and inherent flexibility. Header diameter should vary with fluid flow requirements.

C. Fins shall have a minimum thickness of 0.0075 inch aluminum plate construction. Fins shall have full drawn collars to provide a continuous surface cover over the entire tube for maximum heat transfer. Tubes shall be mechanically expanded into the fins to provide a continuous primary to secondary compression bond over the entire finned length for maximum heat transfer rates. Bare copper tubes shall not be visible between fins.

D. Coil tubes shall be 5/8 inch OD seamless copper, 0.020 inch nominal tube wall thickness, expanded into fins, brazed at joints.

E. Coil connections shall be carbon steel, threaded connection. Vent and drain fittings shall be furnished on the connections, exterior to the air handler. Vent connections provided at the highest point to assure proper venting. Drain connections shall be provided at the lowest point to insure complete drainage and prevent freeze-up.

2.06 HYDRONIC PUMPS

A. Chilled Water Pumps: End Suction, base mounted, flexible coupling, mechanical seals, suitable for hot or cold water service at head and capacity stated on Drawings. Cast iron

casing, bronze fitted, roller bearing, 1750 rpm standard frame motor. Impeller size not to exceed 90% of largest diameter impeller which will fit pump casing. Minimum horsepower and efficiency as indicated on Drawings and not less than will be required at any point of the impeller curve. Provide pressure gauge tappings on suction and discharge flanges. Bell & Gossett, Armstrong, Patterson, Taco, or approved substitute. Provide coupling and shaft guard to meet requirements of State Safety Code. Provide with shaft grounding kit, Aegis or equal. Do not trim impeller where pump is operated by a VFD. Motor shall be Baldor only.

PART 3 EXECUTION

3.01 PIPE INSTALLATION

A. General: Install pipe, tube and fittings in accordance with recognized industry practices. Install each run accurately aligned with a minimum of joints and couplings, but with adequate and accessible unions and flanges for disassembly, maintenance and/or replacement of valves and equipment. Reduce sizes (where indicated) by use of reducing fittings.

1. Unions and flanges for disassembly, maintenance and/or replacement of valves and equipment are not required in installations using grooved joint couplings. (The couplings shall serve as disconnect points.)

B. Piping Runs: Route piping close to and parallel with walls, overhead construction, columns and other structural and permanent-enclosure elements of the building (pitched for drainage). If not otherwise indicated, run piping in the shortest route which does not obstruct usable space or block access for servicing the building or equipment and avoid diagonal runs. Wherever possible in finished and occupied spaces, conceal piping from view. Do not encase horizontal runs in solid partitions.

3.02 PIPING JOINTS

A. General: Provide joints of the type indicated in each piping system, and where piping and joint as manufactured form a system, utilize only that manufacturer's material.

B. Ferrous Threaded Piping: Thread pipe in accordance with ANSI 82.l; cut threads full and clean using sharp dies. Ream threaded ends to remove burrs and restore full inside diameter. Apply pipe joint compound or pipe joint tape (Teflon) where recommended by pipe/fitting manufacturer, on male threads at each joint and tighten joint to leave no more than 3 threads exposed.

C. Solder Copper Tube and Fitting Joints: In accordance with recognized industry practice. Cut tube ends squarely, ream to full inside diameter, and clean outside of tube ends and inside of fittings. Apply solder flux to joint areas of both tubes and fittings. Insert tube full depth into fitting, and solder in a manner which will draw solder full depth and circumference of joint. Wipe excess solder from joint before it hardens. "T-Drill" field formed tees may be utilized where the main is at least two pipe sizes larger than the branch.

D. Braze Copper Tube and Fitting Joints: Where indicated, in accordance with ANSI/ASME B31.5. Pass a slow stream of dry nitrogen gas through the tubing at all times while brazing to eliminate formation of copper oxide.

E. Weld Pipe Joints: In accordance with recognized industry practice and as follows:

1. Weld pipe joints only when ambient temperature is above 0 degrees F.
2. Bevel pipe ends at a 37.5 degree angle, smooth rough cuts, and clean to remove slag, metal particles and dirt.
3. Use pipe clamps or tack-weld joints with 1" long welds; 4 welds for pipe sizes to 10"; 8 welds for pipe sizes up to 20".
4. Build up welds with a stringer-bead pass, followed by a hot pass, followed by a cover of filler pass. Eliminate valleys at center and edges of each weld. Weld by procedures which will ensure elimination of unsound or unfused metal, cracks, oxidation, blow-holes and non-metallic inclusion.
5. Do not weld out piping system imperfections by tack-welding procedures; refabricate to comply with requirements.
6. Install forged branch-connection fittings wherever branch pipe is indicated, or install regular "T" fitting at Contractor's option.

F. Flanged Joints: Match flanges within piping system, and at connections with valves and equipment. Clean flange faces and install gaskets. Tighten bolts to provide uniform compression of gasket.

G. Insulating (Dielectric) Fittings: Where the "joining of ferrous and non-ferrous piping". Use brass valve or brass nipple with length/nominal dramatic ratio of 8 or greater rather than dielectric fitting.

H. Changes in Direction: Use fittings for all changes in direction. Run lines parallel with building surfaces.

I. Line Grades: Pitch steam piping 1" to 40' minimum to low point drips or drains.

J. Unions and Flanges: At all equipment to permit dismantling and elsewhere as consistent with good installation practice.

K. Expansion: Provide loops, swing joints, anchors, runouts and spring pieces to prevent damage to piping or equipment. Flexible hoses are not allowed.

L. Press Fittings: MegaPress Cold Press Mechanical Joint Fittings shall be installed in accordance with the manufacturer’s installation instructions. The protective corrosion coating shall be removed from the outside of the pipe end. The pipe shall be fully inserted into the fitting and the pipe marked at the shoulder of the fitting. The fitting alignment shall be checked against the mark on the pipe to assure the pipe is fully engaged (inserted) in the fitting. The joints shall be pressed using the tool(s) approved by the manufacturer.

3.03 MISCELLANEOUS PIPING EQUIPMENT

A. Floor, Wall and Ceiling Plates: Chrome plated pressed steel or brass screw locked split plates on all pipe penetrations in finished spaces.

B. Strainers: Install in a manner to permit access for cleaning and screen removal and with blow-off valve.

C. Sleeves: At all penetrations of concrete or masonry construction. PVC, 24 gauge galvanized steel or Schedule 40 galvanized steel pipe. Use steel pipe sleeves through beams, footings, girders or columns and for all penetrations of walls or floors below grade. Where floor finish is ceramic tile, terrazzo, or similar material extend standard steel pipe sleeves 1-1/2" above finished floor. Fabricate sleeves 1" diameter larger than pipe or insulation. PVC and sheet metal sleeves at non-structural penetrations only.

D. Sleeve Caulking: Grout uninsulated pipe with cement mortar or approved waterproof mastic. All caulking or grouting shall extend full depth of sleeve. Install UL sealing caulk, putty and/or system at all penetrations of fire rated walls, floors and ceiling.

E. Valves: Install valves in accordance with Section 23 0500. Install control valves specified in other Division 23 Sections.

3.04 EQUIPMENT INSTALLATION

A. Installation and Arrangement: Install and arrange as shown on the Drawings. Comply with manufacturer's recommendations for installation connections and start-up.

B. Lubrication: Lubricate all moving and rotating parts in accordance with the manufacturer's recommendations prior to start-up.

C. Expansion Joint and Compensator Installation: Carefully align joint or compensator and make proper allowance for temperature of pipe at time of installation.

D. Air Vents: Conduct 1/4" copper tubing from high end of air chambers to accessible locations and terminate with screwdriver cock. Conduct 1/4" copper tubing from outlets of automatic air vents to floor drains indicated or to the outside when approved by Governing Authorities.

E. Pumps: Mount in a manner to allow disassembly of pump and motor without disturbing piping.

F. Mechanical contractor and balancing contractor shall be trained on installation, connection, and balancing procedures by certified representative of differential pressure control valves.

3.05 CLEANING

A. General: Clean all dirt and construction dust and debris from all mechanical piping systems and equipment and leave in a new condition. Touch up paint where necessary.

B. Heating & Chilled Water Piping Systems:

1. Add cleaning chemical in proper concentration to clean system of manufacturing and installation contamination and residue.
2. Fill, vent and circulate the system with this solution at design operating temperature. After circulating for four hours, bleed out cleaning solution by the addition of fresh water to the system.
3. Test for pH and add sufficient amount of the cleaning chemical to obtain a pH between 7 and 8.
4. Clean all strainers and remove start-up strainers (from suction diffusers) after the system has operated for one week.

3.06 TEST

A. General:

1. Minimum duration of two hours or longer, as directed for all tests. Furnish report of test observation signed by qualified inspector. Make all tests before applying insulation, backfilling, or otherwise concealing piping or connecting fixtures or equipment. Where part of the system must be tested to avoid concealment before the entire system is complete, test that portion separately, same as for entire system.
2. Provide all necessary temporary equipment for testing, including pump and gauges. Remove control devices before testing and do not use piping system valves to isolate sections where test pressure exceeds valve pressure rating. Fill each section with water and pressurize for the indicated pressure and time.
3. Observe each test section for leakage at end of test period. Test fails if leakage is observed or if pressure drop exceeds 5% of test pressure.

B. Repair:

1. Repair piping system sections which fail the required piping test by disassembly and re-installation, using new materials to the extent required to overcome leakage. Do not use chemical stop-leak compounds, solder, mastics, or other temporary repair methods.
2. Drain test water from piping systems after testing and repair work has been completed.

C. Heating & Chilled Water Piping: 75 psig hydrostatic for 30 psig systems without loss for four hours.

D. Tanks and Equipment: Hydrostatic pressure to 1.5 times operating pressure.

END OF SECTION

SECTION 23 2500
HVAC WATER TREATMENT

PART 1 GENERAL

1.01 DESCRIPTION

A. The requirements of this section apply to the chemical treatment of the mechanical systems. Provide shot feeding of treatment chemicals for closed loop hydronic systems. Provide continuous treatment for open loop systems, including steam systems.

B. Related Work: The requirements of Section 23 0500, Common HVAC Materials and Methods, also apply to this section.

1.02 QUALITY ASSURANCE

A. Regulations: Comply with all DEQ, EPA, OSHA, OSEA, local sewerage agency and Fire Marshal requirements concerning allowable amounts of each chemicals which can be disposed of through the sewer system or in proximity of personnel.

B. Codes: Comply with applicable sections of the State of Oregon Health and Safety Code, OAR Chapter 437, Div. 155, Hazard Communication.

C. Chemical treatment system design, installation, and startup shall be performed by an experienced HVAC system chemical treatment contractor. The chemical representative on site is to have no less than five years' experience. The vendor must have representation within a 200 mile radius of the site. Vendor must have local research and development facility and local in-house manufacturing. Mt. Hood Chemical Co., Chemcoa, or approved.

D. Field Wiring: It is the intent of these specifications that all systems shall be complete and operable. Refer to all drawings and specifications, especially the electrical drawings, to determine voltage, phase, circuit ampacity and number of connections provided. Provide all necessary field wiring and devices from the point of connection indicated on the electrical drawings. Bring to the attention of the Architect in writing, all conflicts, incompatibilities, and/or discrepancies prior to bid or as soon as discovered.

1.03 SUBMITTALS

A. Submit catalog data of chemical treatment equipment, installation details and list of likely chemicals to be used.

B. Submit all chemical Material Safety Data Sheets for each chemical.

C. Submit operating and maintenance data.

1.04 DELIVERY AND HANDLING

A. Chemical Containers Label: The following shall be included as a minimum label on chemical containers:
   1. Chemical contents.
   2. Hazard warnings prominently displayed.
   3. Manufacturer's and/or supplier's name and address.

B. Delivery: All chemical containers shall be factory sealed and unopened.

PART 2 PRODUCTS

2.01 PERFORMANCE CRITERIA

A. Corrosion: Provide a system to limit annual metal corrosion rates as follows:

1.	Cast iron	< 0.002" per year.
2.	Copper	< 0.0005" per year.
3.	Mild steel	< 0.002" per year.
4.	Stainless steel	< 0.0001" per year.

B. Scaling: System shall prevent no greater than 1% loss of heat transfer efficiency in any component or piece of equipment by preventing deposit formation.

C. Fouling: Recommend methods to keep fouling to a minimum. Set blow down rates and/or schedules.

D. Biological Contamination:
   1. Closed Loop Systems: Keep biological counts (algae, bacteria and fungi) to near zero readings.
   2. Open Loop Systems: Maintain total count to less than 1,000,000 per milliliter in a cyclical manner to achieve optimum control with minimum chemical consumption.

PART 3 EXECUTION

3.01 PIPING INSTALLATION

A. Refer to applicable Sections for Valves, Insulation, Painting, etc.

3.02 EQUIPMENT INSTALLATION

A. Installation and Arrangement: Install and arrange as shown on the Drawings. Comply with manufacturer's recommendations for installation connections and start-up.

B. Lubrication: Lubricate all moving and rotating parts in accordance with the manufacturer's recommendations prior to start-up.

3.03 CHEMICAL TREATMENT OF HEATING WATER SYSTEM

A. General: Provide chemical treatment for the heating and chilled water systems. The treatment specialist shall recommend the proper treatment for the systems and initiate the various treatments, including the required chemicals.

B. Standards: Chemical treatment shall be in accordance with currently accepted standards for the Environmental Protection Agency (EPA). Chemicals shall be EPA registered and labeled in accordance with EPA Standards.

C. Implement the treatment and instruct the Owner's personnel in the proper care, use, and maintenance of the systems. Include testing procedures to maintain proper control and to assure adequate corrosion protection and control of water side deposits and scale.

D. Provide an initial start-up supply of chemicals, add them to the systems, and maintain the system at proper chemical level until project final completion. Following project final completion, provide a 12 month supply of chemicals for the systems.

E. Upon completion of cleaning and chemical treatment, tag each system as follows: "This piping system has been cleaned and chemically treated. Do not disturb unless authorized." Locate tag to be plainly visible.

END OF SECTION

SECTION 23 3000
AIR DISTRIBUTION

PART 1 GENERAL

1.01 DESCRIPTION

A. Provide Air Distribution Materials as specified herein and as shown on the Drawings.

B. Material characteristics and size shall be as indicated on the Drawings.

C. Related Work: The requirements of Section 23 0500, Common HVAC Materials and Methods, also apply to this section.

1.02 QUALITY ASSURANCE

A. Air Distribution Equipment Rating: In accordance with AMCA certified rating procedures and bearing the AMCA label.

B. See Commissioning specification for additional requirements.

1.03 SUBMITTALS

A. Submit catalog data, construction details and performance characteristics for all manufactured materials.

B. Submit operating and maintenance data.

C. For adhesives and sealants used on the interior of the building (inside the waterproofing system), include printed statement of volatile organic compound (VOC) content.

PART 2 PRODUCTS

2.01 SHEET METAL

A. Quality Assurance: Galvanized steel sheet metal except where otherwise indicated. Metal gauges, joints and reinforcement in accordance with Mechanical Code, ASHRAE and SMACNA standards. Ductwork shall be fabricated to the following pressure classifications:

1. Return and exhaust ducts: 2” negative.
2. Supply ducts from fan discharge to VAV box inlet: 4” positive. VAV box discharge to diffuser: 1” positive.
3. Underfloor ductwork shall be per 2.1K unless associated with low return ducts and plenums with less than 10' of length below grade. Short runs of RA ductwork below grade may be constructed of 300 Series stainless steel with fully welded seams. Ducts to be lined per code for below grade ducts. Metal gauge shall be at least 20 gauge.

B. Acoustical Duct Lining: Line ducts with 1" thick lining (unless noted otherwise) for installation inside the building insulation envelope, and 1-1/2" for installation outside the building insulation envelope. Density shall be 3 lb / ft^3 minimum. Owens Corning, QuietR, or equal Schueller, or Certain Teed. Meeting NFPA 90A and B requirements for maximum flame spread and smoke developed. Duct liner adhesive shall conform to ASTM C916.Mechanically attach lining to sheet metal duct with fasteners conforming to SMACNA Standard MF-1-1971, Schuller Grip Nails or Gramweld welding pins. Apply fire-retardant type adhesive similar to Schuller No. 44 adhesive, Benjamin Foster 81-99, Insul-Coustic 22 or 3M equivalent on all leading edges, joints and seams.

C. Duct Sealing Tapes: Provide one of the following UL listed ductwork sealing tape systems.

1. Two-part sealing system with woven fiber, mineral gypsum impregnated tape and non-flammable adhesive. Hardcast "DT" tape and "FTA-20" adhesive, United "Uni-Cast" system, or accepted substitute.
2. For joints and seams exposed to the weather in lieu of soldering, United "Uni-Cast" system or approved.
3. Sealing systems with VOC content are not allowed.
4. Sealants and Primers – General: Provide only products having lower volatile organic compound (VOC) content than required by South Coast Air Quality Management District Rule No. 1168.

D. Optional Duct Joints for Sheet Metal Ducts: "Ductmate System" by Ductmate Industries, Inc., Ward Duct Connectors, Inc., Mez Industries, or acceptable substitute. Spiramir self-sealing round duct connector system meeting Class 3 leakage standards with EPDM o-ring seal.

E. Exposed to View Spiral Seam Duct and Fittings: Round and flat oval spiral seam duct shall be manufactured of galvanized steel sheet metal with spiral lock seam. Matching fittings shall be manufactured of galvanized steel with continuous welded seams. Gauge shall be per SMACNA Duct Construction Standard third addition table for appropriate pressure, and reinforcement or at least 26 gauge.

F. Concealed Round Duct: Round and flat oval spiral seam duct shall be manufactured of galvanized sheet metal with spiral lock seam. Construction, gauges, and reinforcement in accordance with SMACNA standards. Fittings shall be manufactured of galvanized steel with spot welded or riveted and sealed seams or continuously welded seams. Snap lock longitudinal seam duct shall fully comply with SMACNA standards for duct gauge and seam type for appropriate pressure class. Adjustable elbows are prohibited.

G. Flexible Ductwork-Low Pressure: Insulated low pressure flexible duct, factory fabricated assembly consisting of a zinc-coated spring steel helix seamless inner liner, wrapped with a nominal 1" thick insulation for installation inside the building insulation envelope, and 1-1/2" for installation outside the building insulation envelope, 1 pound/cubic foot density fiberglass insulation. The assembly shall be sheathed in a vapor barrier jacket, factory vapor resistance sealed at both ends of each section. The composite assembly, including insulation and vapor barrier, shall meet the Class 1 requirements of NFPA

Bulletin No. 90-A and be labeled by Underwriters Laboratories, Inc., with a flame spread rating of 25 or less and a smoke developed rating of 50 or under. The duct shall have factory sealed double air seal (interior and exterior) to assure an airtight installation. Genflex, ATCO, Wiremold, Thermaflex, Glassflex, Clevepak, Schuller, or accepted substitute.

2.02 ACCESSORIES

A. Manual Volume Dampers: Construct of material two gauges heavier than duct in which installed; single plate up to 12" wide; multiple over 12" wide. Hem both edges 1/2" and flange sides 1/2". Use Young, Duro-Dyne, MAT, or accepted substitute damper accessories. Young numbers are shown.

1. No. 605 bearing set with No. 403 regulator for dampers up to 24" long.
2. For dampers over 24" long use No. 660 3/8" rod, No. 656 end bearing and No. 403 regulator.
3. Where damper regulators are not readily accessible, use No. 660 or No. 661 rod extensions and No. 301 and No. 315 concealed damper regulators or MAT cable operated dampers as required.

Location of all volume dampers is not necessarily shown on Drawings; minimum required is one in each supply, return or exhaust main, and one in each branch.

B. Standard Gravity Exhaust Intake Heads:

1. Aluminum cap with backdraft dampers on relief only, curb connection, flashing, 1/2" mesh galvanized bird screen and hinged access. Greenheck, Carnes, Cook or accepted substitute.
2. Install with automatic relief / outside air intake damper in curb as indicated on the Drawings.

C. Locking Connection Straps: 1/2" wide positive locking steel straps or nylon self-locking straps. Panduit or accepted substitute.

D. Access Doors In Sheet Metal Work:

1. Hollow core double construction of same or heavier gauge material as duct in which installed. Use no door smaller than 12" by 12" for simple manual access or smaller than 18" by 24" where personnel must pass through infrequently. Use 24" by 60" minimum for filters and more frequent maintenance. Use Ventlok or accepted substitute hinges and latches on all doors.
   a. 100 Series hinges and latches on low pressure system doors up to 18" maximum dimension.
   b. 200 Series on larger low pressure system doors and 333 Series on high pressure systems.
2. Construct doors up to 18" maximum dimension with 1" overlap, furr and gasket with 3/4" by 1/8" sponge rubber. Fit larger doors against 1-1/2" by 1/8" or angle frame and gasket with 3/4" by 1/8" sponge rubber or felt.

E. Anti-Backdraft Dampers: Connected, gasket-edged aluminum blades set in 14 gauge or heavier steel frame; brass, nylon or Teflon bearings; equip with spring helper with tension adjustment feature or with adjustable counterweight and adjust to open when not more than 0.10" wg pressure is applied. Ruskin CBS-4, Greenheck, Pacific Air Products, Air Balance, Controlair or accepted substitute.

F. Opposed Blade Volume Damper: Install opposed blade volume damper in each zone supply duct on discharge of multi-zone units and where indicated on Drawings. Young No. 817 or accepted substitute.

G. Flexible Connections: Neoprene impregnated fiberglass connection. Ventglass, Duro-Dyne, or accepted substitute.

H. Control Dampers: Construct of aluminum frame and blades with continuous full length axle shafts and/or operating "jackshafts" as required to provide coordinate tracking of all blades. Interlocking multi-blade type, except where either dimension is less than 10", a single blade may be used. Opposed blade type on all modulating dampers and parallel blades on all two position dampers. Provide with metal jamb seal and neoprene blade seals. Damper assembly rated for maximum air leakage of 4 CFM per square foot at 1" wg pressure or less and with interconnecting blade linkages in the side channels of the frame.

I. Louvered Gravity Exhaust Head / Outside Air Intake Housing: Extruded aluminum (0.0081) louvered tiered style with curb connection, flashing, 1/2" mesh bird screen. Cap color as selected by Architect. Provide with storm proof blades with aluminum construction and Kynar finish. Color as selected by architect from standard color palette. See drawings for required performance and custom height/number of louver tiers. Greenheck WIH/WRH as basis of design. Equal Ruskin, Cook, or Carnes approved.

2.03 GRILLES, REGISTERS AND DIFFUSERS

A. Description: Provide grilles, registers and diffusers as shown on the Drawings.

B. Finishes:

1. Steel: Flat white enamel prime coat, factory applied on ceiling diffusers. Others are to have a baked enamel finish, color as selected by Architect.
2. Aluminum: Anodized clear finish unless indicated otherwise.

C. Manufacturers: Carnes, Krueger, Titus, Price, Nailor, and Tuttle & Bailey are accepted substitutes where only Titus model numbers are listed. Where other manufacturer's products are listed and/or "accepted substitute" is indicated, only the products or an accepted substitute for that item shall be provided.

D. Ceiling Return and/or Exhaust Register: Perforated snap-in or concealed hinged face plate. Use in spaces containing ceiling diffusers and/or T-bar ceilings. Provide with damper except where dampered plenums are indicated. Titus PAR

E. Sidewall Supply Grille or Register: Double deflection grille with face bars parallel to long dimension on ceiling type and horizontal on wall type; bars to be individually adjustable, spaced on 0.66" to 0.75" centers; key operated opposed blade volume damper. Titus 300RL.

F. Floor Return Grille: Provide steel with 14 gauge face and sleeve, 1/8" X 1/2" blades 1/2" O.C with 0 degree blade angle, blades welded to the frame and supported by 14 gauge support bars 6" O.C., with painted finish per Owner. KEES INC. Model FHD.

PART 3 EXECUTION

3.01 EQUIPMENT INSTALLATION

A. Air Handling Equipment Installation and Arrangement: Install and arrange as shown on Drawings. Comply with the manufacturer's recommendations for installation, connection, and start-up.

B. Equipment Access Panels: Locate free of all obstructions such as ceiling bars, electrical conduit, lights, ductwork, etc.

C. Filters: Install specified filters or accepted substitute temporary construction filters in supply units and systems prior to start-up or use for drying and/or temporary heat. Replace prior to acceptance of project.

3.02 INSTALLATION OF GRILLES, REGISTERS AND DIFFUSERS

A. Size and air handling characteristics shall be as shown on the Drawings.

B. Locate, arrange, and install grilles, registers and diffusers as shown on the Drawings. Locate registers in tee-bar ceilings with diffusers centered on the tile unless indicated otherwise.

3.03 DUCTWORK INSTALLATION

A. Support: Install ductwork with 1" wide strap cradle hangers not more than 8' on centers or as required by code. Support terminal units independent of adjacent ductwork. Attach to available building construction according to good practices for materials involved. Manufactured hanger system acceptable in lieu of fabricated hangers at contractor’s option. Ductmate “Clutcher” system or approved. Support flexduct where shown to be used for lengths beyond 4’ per above requirements. Comply with SMACNA Duct Construction Standard Figure 3-9 and 3-10.

B. Fan and Air Handling Unit Flexible Connections: Install neoprene impregnated fiberglass connections in ductwork at all rotating equipment. Ventglass, Duro-Dyne or accepted substitute.

C. Elbows and Fittings: Construct elbows with throat radius equal to duct width in plane of turn or make them square and provide double wall, air foil turning vanes.

D. Fittings: Make transitions and take-offs as shown on Drawings. Provide volume dampers and splitter dampers as indicated on Drawings and as specified. Saddle tees are not allowed.

E. Acoustical Duct Lining:

1. Acoustically line all fan unit intake and discharge plenums, all ductwork indicated as lined on the Drawings, all sheet metal ductwork specified per Section 23 0700 as insulated, where exposed to view or subject to damage in areas such as mechanical rooms, and, at the Contractor's option, all insulated ductwork specified in Section 23 0700 except outside air intake ducts. The duct size noted on the Drawings is the clear opening of the duct with insulation. Insulation shall not reduce duct size listed.
2. All duct designated to receive duct liner shall be completely covered with a fire-resistant, fiber-bonding coating, or covering (composite, polymer, vinyl or neoprene) that reduces airflow resistance and controls fiber release. The duct lining shall be adhered to the sheet metal with 100% coverage of a fire retardant adhesive. The coated surface of the duct liner shall face the airstream. When width of duct exceeds 12” and also when height exceeds 24”, use corrosion resistant mechanical fasteners 12” on center maximum lateral spacing and 18” on center maximum longitudinal spacing. Start fastening within 3” of upstream transverse edge of the liner and within 3” of the longitudinal joint. Mechanical fasteners shall be either impact-driven or weld-secured and shall not pierce the duct walls. Fasteners and washers of the specified type and length shall be used assuring no greater than 10% compression of the liner thickness. Installation shall be made so that no fastener pins protrude into the airstream. No gaps or loose edges shall occur in the insulation. Top pieces shall be supported by the side pieces. Provide insulated build out frames for attaching dampers at running vanes where required.
3. All transverse and longitudinal abutting edges of duct lining shall be sealed and lapped 3” with a heavy coat of approved adhesive, in accordance wit the manufacturer’s recommendations. All upstream transverse edges shall be installed with sheet metal nosings. All raw exposed edges of lining shall be ‘buttered’ with approved adhesive.

F. Manual Volume Dampers: Location of all volume dampers are not necessarily shown on the Drawings. Provide a minimum of one volume damper in each supply, return or exhaust branch. Do not install dampers closer than 3 duct diameters to the diffuser.

G. Duct Insulation: Specified in Section 23 0700.

H. Sleeves: Provide galvanized sheet metal plaster ring around ductwork penetrating exposed finished walls. Sleeve and flash all duct penetrations through exterior walls in an air tight and weatherproof manner.

I. Plenums: Construct sheet metal plenums and partitions of not lighter than 18 gauge galvanized steel and reinforce with 1-1/2" by 1/2" by 1/8" angles as required to prevent drumming or breathing.

J. Access: Install necessary access opening and covers for cleaning, wiring or servicing motors, filters, fans, both entering and leaving air sides of coils, fire and/or smoke dampers and to other equipment located within or blocked by sheet metal work.

K. Sealing: Caulk, seal, grout and/or tape ductwork and plenums to make airtight at seams, joints, edges, corners and at penetrations. Solder all seams, joints, etc., on all ductwork exposed to the weather. Install specified tape in accordance with manufacturer's requirements using degreaser on surfaces to be taped and wiped to eliminate moisture.

3.04 NEW DUCTWORK CLEANING

A. Store all ductwork materials on pallets or above grade, protected from weather, dirt/mud and other construction dust.

B. Remove all accumulated dust, dirt, etc. from each duct section as it is being installed.

C. Clean all diffusers, grilles and registers just prior to project final completion.

D. Cover all ductwork terminations during construction to prevent accumulation of dust and debris.

END OF SECTION

SECTION 23 3400
HVAC FANS

PART 1 GENERAL

1.01 DESCRIPTION

A. Provide Fans as specified herein and shown on the Drawings.

B. Equipment capacity and size as indicated in the equipment lists on the Drawings.

C. Related Work: The requirements of Section 23 0500, Common HVAC Materials and Methods, also apply to this section.

1.02 QUALITY ASSURANCE

A. Air Handling Equipment: Rated in accordance with AMCA certified rating procedures and AMCA labeled.

B. See Commissioning specification for additional requirements.

1.03 SUBMITTALS

A. Submit catalog data, construction details and performance characteristics for each fan.

B. Submit operating and maintenance data.

PART 2 PRODUCTS

2.01 EXHAUST FANS

A. Low Pressure Sidewall Propeller Exhaust Fan: Fan shall be a wall mounted, direct driven by EC motor with remote signal (0-10 volt) for dynamic speed operation. Cast aluminum hub with aluminum blades in a galvanized housing. Size and capacity as shown on the Drawings. Provide with motorized damper with the same interior frame size as fan housing. See 23 0923 for damper actuator. Greenheck AER Series or equal Carnes, Cook, Twin Cities, or approved.

B. Inline Mixed Flow:

1. The housing shall be constructed of welded steel. Housing shall have inlet and outlet collars for slip fit duct connections. The housing and bearing and/or motor supports shall be constructed of structural steel members to prevent vibration and rigidly support the shaft and bearings. Welded steel vales shall straighten the flow of air from the fan discharge. Units shall be constructed with mounting arms shipped loose for field use where noted. Units shall accommodate base mount or ceiling hung mounting without structural modifications to the fan.

2. The wheel shall be of the mixed flow type. Wheels shall have a wheel cone, spherical back plate and single thickness cambered blades. Wheels shall be statically and dynamically balanced to balance grade G6.3 per ANSIS2.19.
   a. Motors: see section 23 0500 for invertor rated motor.
3. Each assembled fan shall be test run at the factory at the specified fan RPM. The maximum allowable fan vibration shall be 0.15 in/sec. peak velocity, filter-in, for belt drive units in a single plane on the fan housing. This report shall be provided at no charge to the customer upon request.
4. Provide with factory constructed and tested sound enclosure chamber. Inlet and outlet sound power levels shall be provided for each of the eight octave bands at the point of operation.
5. Fans shall be licensed to bear the AMCA Seal for sound air performance. Greenheck, QEI, or approved.

PART 3 EXECUTION

3.01 INSTALLATION

A. Install and arrange equipment as shown on the Drawings and as recommended by the equipment manufacturer.

3.02 AIR HANDLING INSTALLATION

A. Installation and Arrangement: Air handling equipment shall be installed and arranged as shown on the Drawings. Comply with the manufacturer's recommendations for installation connection and start-up.

B. Lubrication: All moving and rotating parts shall be lubricated in accordance with the manufacturer's recommendations prior to start-up.

END OF SECTION

SECTION 23 4000
HVAC AIR CLEANING DEVICES

PART 1 GENERAL

1.01 DESCRIPTION

A. Provide Air Cleaning Devices as specified herein and as shown on the Drawings.

B. Materials characteristics and size shall be as indicated on the Drawings.

C. Related Work: The requirements of Section 23 0500, Common HVAC Materials and Methods, also apply to this section.

1.02 QUALITY ASSURANCE

A. Air Equipment Rating: In accordance with ASHRAE 52.2-2007.

1.03 SUBMITTALS

A. Submit catalog data, construction details and performance characteristics for all manufactured materials.

B. Submit operating and maintenance data.

PART 2 PRODUCTS

2.01 AIR FILTERS

A. Disposable Media, MERV 8 Rated:

1. Disposable, preformed 100% synthetic non-woven media, pleated 2” thick cartridge type with carrier board frames with diagonal and horizontal supports. Average ASHRAE test efficiency of MERV 8 per ASHRAE 52.2-2007 App J with initial pressure drop across the clean filter bank not exceeding 0.2" W.C. when operating at 500 FPM. The filter media shall have an Underwriters Laboratories UL 900 Class 2 listing.
2. Provide specified filters for temporary heat and testing during construction and replace filters with new clean, specified filters prior to acceptance of project by Owner (two complete sets of media are required).
3. Flanders or equal Farr.

B. Disposable Media, MERV 13 Rated:

1. Disposable, preformed 100% synthetic non-woven media, pleated 4” thick cartridge type with carrier board frames with diagonal and horizontal supports. Average ASHRAE test efficiency of MERV 13 per ASHRAE 52.2-2007 App J with initial pressure drop across the clean filter bank not exceeding 0.4" W.C. when operating at 500 FPM. The filter media shall have an Underwriters Laboratories UL 900 Class 2 listing.

2. Flanders or equal Farr.

PART 3 EXECUTION

3.01 EQUIPMENT INSTALLATION

A. Air Handling Equipment Installation and Arrangement: Install and arrange as shown on Drawings. Comply with the manufacturer's recommendations for installation, connection, and start-up.

B. Equipment Access Panels: Locate free of all obstructions such as ceiling bars, electrical conduit, lights, ductwork, etc.

C. Filters: Install specified filters or accepted substitute temporary construction filters in supply units and systems prior to start-up or use for drying and/or temporary heat. Provide 1 additional set of filters and replace those installed during Balancing and Commissioning process.

D. Install and arrange equipment as shown on the Drawings and as recommended by the equipment manufacturer.

END OF SECTION

SECTION 23 6215
AIR-COOLED LIQUID CHILLER

PART 1 GENERAL

1.01 SYSTEM DESCRIPTION

A. Microprocessor controlled, air-cooled liquid chiller utilizing scroll compressors, low sound fans, electronic expansion valve, hydronic pump system.

B. Provided under Alternate #1

1.02 QUALITY ASSURANCE

A. Unit shall be rated in accordance with AHRI Standard 550/590, latest edition (U.S.A.) and all units shall be ASHRAE 90.1 compliant.

B. Unit construction shall comply with ASHRAE 15 Safety Code, UL latest edition, and ASME applicable codes (U.S.A. codes).

C. Unit shall be manufactured in a facility registered to ISO 9001 Manufacturing Quality Standard.

D. Unit shall be full load run tested at the factory.

E. See Commissioning specification for additional requirements.

F. A factory representative shall meet with Control Contractor to review sequence of operations and assist Control Contractor in generating a sequence of operation. Instances #'s from the factory controller shall be part of the sequence. See Section 23 0923 for more information and requirements.

1.03 DELIVERY, STORAGE AND HANDLING

A. Unit controls shall be capable of withstanding 150 F (66 C) storage temperatures in the control compartment.

B. Unit shall be stored and handled per unit manufacturer's recommendations.

PART 2 PRODUCTS

2.01 EQUIPMENT

A. Manufacturer: Carrier, York (Johnson Controls), Daikin, Trane or approved.

B. General: Factory assembled, single-piece chassis, air-cooled liquid chiller. Contained within the unit cabinet shall be all factory wiring, piping, controls, refrigerant charge (R-410A), and special features required prior to field start-up.

C. Unit Cabinet:

1. Frame shall be of heavy-gage, galvanized steel.
2. Exterior panels shall be galvanized steel with a baked enamel powder or pre-painted finish.
3. Cabinet shall be capable of withstanding 500-hour salt spray test in accordance with the ASTM (U.S.A.) B-117 standard.

D. Fans:

1. Standard condenser fans shall be direct-driven, 9-blade airfoil cross-section, reinforced polymer construction, shrouded-axial type, and shall be statically and dynamically balanced with inherent corrosion resistance.
2. Fan operation shall allow reduced sound levels during scheduled unoccupied operating periods. Manufacturers without unoccupied reduced sound capability shall submit 1/3 octave band data and sound power data as measured according to AHRI 370 as confirmation of unit sound characteristics.
3. Air shall be discharged vertically upward.
4. Fans shall be protected by coated steel wire safety guards.

E. Compressor/Compressor Assembly:

1. Fully hermetic, direct-drive, scroll type compressors.
2. Compressor motors shall be cooled by refrigerant gas passing through motor windings and shall have either internal line break thermal and current overload protection or external current overload modules with compressor temperature sensors.
3. Compressors shall be mounted on rubber in shear vibration isolators.
4. Each compressor shall be equipped with crankcase heaters to minimize oil dilution.
5. Chillers with less than 4 stages of operation or not rated to operation below 25% are not allowed.

F. Cooler:

1. Cooler shall be rated for a refrigerant working-side pressure of 450 psig (3103 kPa) and shall be tested for a maximum waterside pressure of 150 psig (1034 kPa) when optional hydronic package is installed.
2. Shall be single-pass, ANSI type 316 stainless steel, brazed plate construction.
3. Shell shall be insulated with 3/4-in. (19 mm) closed-cell, polyvinyl-chloride foam with a maximum K factor of 0.28.
4. Shall incorporate 2 independent refrigerant circuits.
5. Cooler shall have optional factory-installed heater, to protect cooler from ambient temperature freeze down to 0º F.
6. Unit shall be provided with a factory-installed flow switch.
7. All connections internal to the unit shall use standard Victaulic-type fittings.
8. Cooler fluid inlet line shall have a 40 mesh strainer just ahead of the cooler.

9. Include factory freeze protection (heat trace) of water carrying components to factory pipe terminations. Provide power to devices through unit power connection.

G. Condenser:

1. Coil shall be air-cooled heat exchanger with microchannel coils and shall have a series of flat tubes containing a series of multiple, parallel flow microchannels layered between the refrigerant manifolds.
2. Coils shall consist of a two-pass arrangement. Coil construction shall consist of aluminum alloys for fins, tubes, and manifolds in combination with a corrosion-resistant coating.
3. Tubes shall be cleaned, dehydrated, and sealed.
4. Assembled condenser coils shall be leak tested and pressure tested at 656 psig (4522 kPa).

H. Refrigeration Components:

1. Refrigerant circuit components shall include filter drier, moisture indicating sight glass, electronic expansion device, discharge and liquid service valves and complete operating charge of sides both refrigerant R-410A and compressor oil.

I. Controls, Safeties, and Diagnostics:

1. Unit controls shall include the following minimum components:
   a. Microprocessor with non-volatile memory. Battery backup system shall not be accepted.
   b. Separate terminal block for power and controls.
   c. Control transformer to serve all controllers, relays, and control components.
   d. ON/OFF control switch.
   e. Replaceable solid-state controllers.
   f. Pressure sensors shall be installed to measure suction and discharge pressure for each circuit. Thermistors shall be installed to measure cooler entering and leaving fluid temperatures, outdoor ambient temperature, and suction temperature. Provision for field installation of accessory sensor to measure compressor return gas temperature.
2. Unit controls shall include the following functions:
   a. Automatic circuit lead/lag for dual circuit chillers.
   b. Hermetic scroll compressors are maintenance free and protected by an auto-adaptive control that minimizes compressor wear.
   c. Capacity control based on leaving chilled fluid temperature and compensated by rate of change of return-fluid temperature with temperature set point accuracy to 0.1° F (0.06° C).
   d. Limiting the chilled fluid temperature pulldown rate at start-up to an adjustable range of 0.2° F to 2° F (0.11° C to 1.1° C) per minute to prevent excessive demand spikes at start-up.

e. Seven-day time schedule.

f. Leaving chilled fluid temperature reset from return fluid and outside air temperature.

g. Timed maintenance scheduling to signal maintenance activities for pump, condenser coil cleanings, strainer maintenance and user-defined maintenance activities.

h. Low ambient protection to energize cooler and hydronic system heaters.

i. Periodic pump start to ensure pump seals are properly maintained during off-season periods.

j. Single step demand limit control activated by remote contact closure.

k. Nighttime sound mode to reduce the sound of the machine by a user-defined schedule.

3. Diagnostics:

a. The control panel shall include, as standard, a scrolling marquee display capable of indicating the safety lockout condition by displaying a code for which an explanation may be scrolled at the display.

b. Information included for display shall be:

1) Compressor lockout.

2) Loss of charge.

3) Low fluid flow.

4) Cooler freeze protection.

5) Cooler set point.

6) Chilled water reset parameters.

7) Thermistor and transducer malfunction.

8) Entering and leaving-fluid temperature.

9) Compressor suction temperature.

10) Evaporator and condenser pressure.

11) System refrigerant temperatures.

12) Chiller run hours.

13) Compressor run hours.

14) Compressor number of starts.

15) Low superheat.

16) Time of day:

a) Display module, in conjunction with the microprocessor, must also be capable of displaying the output (results) of a service test. Service test shall verify operation of every switch, thermistor, fan, and compressor before chiller is started.

b) Diagnostics shall include the ability to review a list of the 20 most recent alarms with clear language descriptions of the alarm event. Display of alarm codes

without the ability for clear language descriptions shall be prohibited.

c) An alarm history buffer shall allow the user to store no less than 20 alarm events with clear language descriptions, time and date stamp event entry.

d) The chiller controller shall include multiple connection ports for communicating with the local equipment network.

e) The control system shall allow software upgrade without the need for new hardware modules.

4. Safeties:

a. Unit shall be equipped with thermistors and all necessary components in conjunction with the control system to provide the unit with the following protections:

1) Loss of refrigerant charge.

2) Reverse rotation.

3) Low chilled fluid temperature.

4) Thermal overload.

5) High pressure.

6) Electrical overload.

b. Factory pump motor shall have external overcurrent protection.

J. Operating Characteristics:

1. Unit shall be capable of operating down to 45 F.

2. Unit shall be capable of starting and running at outdoor ambient temperatures up to 120 F (50 C) for all sizes. Unit shall additionally be able to stay online when running with a 125 F (52 C) ambient temperature.

3. Unit shall be capable of starting up with 95 F (35 C) entering fluid temperature to the cooler.

K. Fan Motors:

1. Condenser fans shall be direct-drive type, discharging air vertically upward. See drawings for unit acoustic performance.

2. All condenser fan motors shall be totally enclosed 3-phase type with permanently lubricated ball bearings, class F insulation and internal, automatic reset thermal overload protection or manual reset calibrated circuit breakers.

3. Shafts shall have inherent corrosion resistance.

4. Fan blades shall be statically and dynamically balanced.

5. Condenser fan openings shall be equipped with PVC coated steel wire safety guards.

L. Electrical Requirements:

1. Unit/module primary electrical power supply shall enter the unit at a single electrical box.
2. Unit shall operate on 3-phase power at the voltage shown in the equipment schedule.
3. Control points shall be accessed through terminal block.
4. Unit shall be shipped with factory control and power wiring installed.
5. Provide with factory installed disconnect.
6. Unit shall be listed for SCCR = 65k AIC.

M. Chilled Water Circuit:

1. Chilled water circuit shall be rated for 300 psig (2068 kPa).
2. Solid-state flow monitor with integral relay shall be factory installed and wired.
3. Brass body strainer with 40 mesh screen and ball type blow down.

N. Special Features:

1. Security Grilles/Hail Guards:

   Unit shall be supplied with factory or field-installed, louvered, sheet metal panels which securely fasten to the chiller and provide condenser coil protection against hail and other physical damage. Provide wire guards entirely covering the sides of the chiller below the coil section.
2. Vibration Isolation:

   Vibration isolation springs shall be supplied for field installation at unit mounting points.
3. BACnet Communication Option:

   Shall allow the integration with a BACnet MS/TP network.
4. Freeze Protection Cooler Heaters:

   Cooler heaters shall provide protection from cooler freeze-up to 0º.
5. Low Sound Package: Low-sound Condenser fans and compressor blankets to provide chiller sound reduction to match acoustic information listed on the drawings. Acoustic / sound performance limits listed on the drawings are based on testing per AHRI 370. Sound Pressure value(s) is / are listed at 30’ in a free field. Submittal shall be provided with sound value per AHRI 370 normalized to 30’ in a free field.
6. Compressor Suction Service Valves:

   Shall provide a suction service valve per circuit, which is in addition to the standard discharge service valve.
7. Controls: Operation shall be from BACnet Integration. See specification for sequence.

O. Manufacturer's Field Service: Engage a factory authorized service representative to inspect field assembled components and equipment installation, to include electrical and piping connections. Report results to A/E in writing. Inspection must include a

complete startup checklist to include (as a minimum) the following: Completed Start-Up Checklists as found in manufacturer's IOM.

P. Engage a factory authorized service representative to perform startup service. Clean entire unit, comb coil fins as necessary. Verify water source for compliance with manufacturer's requirements for flow and temperature. Measure and record electrical values for voltage and amperage. Refer to Division 23 "Testing, Adjusting and Balancing" and comply with provisions therein.

Q. Engage a factory authorized service representative to train Owner's maintenance personnel to adjust, operate and maintain the entire unit. Refer to Division 01 Section Closeout Procedures and Demonstration and Training.

END OF SECTION

SECTION 23 7400
CENTRAL STATION HVAC UNITS

PART 1 GENERAL

1.01 SECTION INCLUDES

A. Indoor Air Handling Units.

1.02 REFERENCES

A. AFBMA 9 - Load Ratings and Fatigue Life for Ball Bearings.

B. AMCA 99 - Standards Handbook.

C. AMCA 210 - Laboratory Methods of Testing Fans for Rating Purposes.

D. AMCA 300 - Test Code for Sound Rating Air Moving Devices.

E. AMCA 500 - Test Methods for Louver, Dampers, and Shutters.

F. AHRI 410 - Forced-Circulation Air-Cooling and Air-Heating Coils.

G. AHRI 430 - Central-Station Air-Handling Units.

H. AHRI 435 - Application of Central-Station Air-Handling Units.

I. ASTMB117 - Standard Practice for Operating Salt Spray Apparatus.

J. NEMA MG1 - Motors and Generators.

K. NFPA 70 - National Electrical Code.

L. SMACNA - HVAC Duct Construction Standards - Metal and Flexible.

M. UL 723 - Test for Surface Burning Characteristics of Building Materials.

N. UL 900 - Test Performance of Air Filter Units.

O. UL 1995 - Standard for Heating and Cooling Equipment.

P. UL 94 - Test for Flammability of Plastic Materials for Parts in Devices and Appliances.

Q. IBC 2000, 2003 - International Building Code.

R. NFPA 90A - Standard for the Installation of Air Conditioning and Ventilating Systems.

S. NFPA 5000 - Building Construction and Safety Code.

T. ASHRAE 90.1 Energy Code.

U. AHRI Standard 1060 - Rating Air-to-Air Heat Exchangers for Energy Recovery Ventilation Equipment.

V. GSA 2003 Facilities Standard - 5.9 HVAC Systems and Components.

1.03 SUBMITTALS

A. Shop Drawings: Indicate assembly, unit dimensions, weight loading, required clearances, construction details, field connection details, and electrical characteristics and connection requirements. Computer generated fan curves for each air handling unit shall be submitted with specific design operating point noted. A computer generated psychometric chart shall be submitted for each cooling coil with design points and final operating point clearly noted. Sound data for discharge, radiated and return positions shall be submitted by octave band for each unit. Calculations for required baserail heights to satisfy condensate trapping requirements of cooling coil shall be included.

B. Product Data:
   1. Provide literature that indicates dimensions, weights, capacities, ratings, fan performance, finishes of materials, electrical characteristics, and connection requirements.
   2. Provide data of filter media, filter performance data, filter assembly, and filter frames.
   3. Provide manufacturer's installation instructions.

1.04 SAFETY AGENCY LISTED & CERTIFICATION

A. Air handler furnished with double width, double inlet (DWDI) fans and/or plenum fans where applicable, shall be certified in accordance with the central station air handling units certification program, which is based on AHRI Standard 430. (NOTE: Above does not apply to fan array).

B. Air handling unit water heating & cooling coils shall be certified in accordance with the forced circulation air cooling and air heating coils certification program, which is based on AHRI Standard 410.

1.05 DELIVERY, STORAGE, AND HANDLING

A. Deliver, store, protect and handle products to site.

B. Accept products on site on factory-furnished shipping skids. Inspect for damage.

C. Store in clean dry place and protect from construction traffic. Handle carefully to avoid damage to components, enclosures, and finish.

PART 2 PRODUCTS

2.01 CENTRAL STATION AIR HANDLERS

A. Unit Construction

1. Configuration: Fabricate as detailed on drawings.
2. Performance: Conform to AHRI 430. See schedules on prints. (NOTE: above does not apply to fan array).
3. Acoustics: Sound power levels (dB) for the unit shall not exceed the specified levels shown on the unit schedule. The manufacturer shall provide the necessary sound treatment to meet these levels if required.
4. Fabricate unit with heavy gauge channel posts and panels secured with mechanical fasteners. All panels, access doors, and ship sections shall be sealed with permanently applied bulb-type gasket. The largest module shall fit through an opening no larger than 40”x60”.
5. Panels and access doors shall be constructed as a 2-inch nominal thick; thermal broke double wall assembly, injected with foam insulation with an R-value of not less than R-13 or equal fiberglass.
   a. The inner liner shall be constructed of G90 galvanized steel.
   b. The outer panel shall be constructed of G90 galvanized steel.
   c. The floor plate shall be constructed as specified for the inner liner.
   d. Unit will be furnished with solid inner liners at coil panels. Perforated at all others.
6. Panel deflection shall not exceed L/240 ratio at 125% of design static pressure, maximum 5 inches of positive or 6 inches of negative static pressure. Deflection shall be measured at the panel midpoint.
7. The casing leakage rate shall not exceed .5 cfm per square foot of cabinet area at 5 inches of positive static pressure or 6 inches of negative static pressure.
8. Module to module field assembly shall be accomplished with an overlapping, full perimeter internal splice joint that is sealed with bulb type gasketing on both mating modules to minimize on-site labor and meet indoor air quality standards.
9. Access doors shall be flush mounted to cabinetry, with minimum of two six inch long stainless steel piano-type hinges, latch and full size handle assembly. Access doors shall swing outward for unit sections under negative pressure. Access doors on positive pressure sections, shall have a secondary latch to relieve pressure and prevent injury upon access.
10. A formed G60 galvanized steel base rail shall be provided by the unit manufacturer for structural rigidity and condensate trapping.

B. Fan Assemblies

1. Option #1: Acceptable fan assembly shall be direct-drive type plenum fan. Fan assemblies shall be dynamically balanced by the manufacturer on all three planes. Provide access to motor and fan assembly through hinged access door. Motor shall be EC type.

2. Option #2: Fan and motor shall be mounted internally on a steel base. Factory mount motor on slide base that can be slid out the side of the unit if removal is required. Provide access to motor, drive, and bearings through hinged access door. Fan and motor assembly shall be mounted on 2" deflection spring vibration type isolators inside cabinetry. Seismic snubbers shall be provided.

C. Electrical

1. The air handler power and control devices shall be ETL or UL listed.
2. Unit shall be factory wired from single disconnect at SA fan and RA fan to individual fan motors. Disconnect shall be fused type.
3. Provide all conduit and conductors. Install per NEC.
4. Fans shall be individually fused.

D. Heating & Chilled Water Coils

1. Certification: Acceptable water coils shall be certified in accordance with AHRI Standard 410 and bear the AHRI label. Coils exceeding the scope of the manufacturer's certification and/or the range of AHRI's standard rating conditions will be considered provided the manufacturer is a current member of the AHRI Forced Circulation Air-Cooling and Air-Heating Coils certification programs and that the coils have been rated in accordance with AHRI Standard 410. Manufacturer must be ISO 9002 certified.
2. Provide Drain pan for cooling coil. Construct drain pans from stainless steel with cross break and double sloping pitch to drain connection. Provide drain pans under cooling coil section. Drain connection centerline shall be a minimum of 3'' above the base rail to aid in proper condensate trapping. Drain connections that protrude from the base rail are not acceptable. There must be a full 2'' thickness of insulation under drain pan.
3. Provide access to coil(s) for service and cleaning. Enclose coil headers and return bends fully within unit casing. Unit shall be provided with coil connections that extend a minimum of 5" beyond unit casing for ease of installation. Drain and vent connections shall be provided exterior to unit casing. Coil connections must be factory sealed with grommets on interior and exterior panel liners to minimize air leakage and condensation inside panel assembly. If not factory packaged, Contractor must supply all coil connection grommets and sleeves. Coils shall be removable through side and/or top panels of unit without the need to remove and disassemble the entire section from the unit.
    a. Headers shall consist of seamless copper tubing to assure compatibility with primary surface. Headers to have intruded tube holes to provide maximum brazing surface for tube to header joint, strength, and inherent flexibility. Header diameter should vary with fluid flow requirements.
    b. Fins shall have a minimum thickness of 0.0075 inch aluminum plate construction. Fins shall have full drawn collars to provide a continuous surface cover over the entire tube for maximum heat transfer. Tubes

shall be mechanically expanded into the fins to provide a continuous primary to secondary compression bond over the entire finned length for maximum heat transfer rates. Bare copper tubes shall not be visible between fins.

c. Coil tubes shall be 5/8 inch OD seamless copper, 0.020 inch nominal tube wall thickness, expanded into fins, brazed at joints.

d. Coil connections shall be carbon steel, threaded connection. Vent and drain fittings shall be furnished on the connections, exterior to the air handler. Vent connections provided at the highest point to assure proper venting. Drain connections shall be provided at the lowest point to insure complete drainage and prevent freeze-up.

E. Filters

1. Furnish angled or flat filter section as shown on drawings with 2-inch MERV 8 pre-filter frame and 4-inch MERV 13 filter.

2. See 23 4000 for filters.

F. Plenum / Access Sections

1. Plenum section shall be provided and properly sized for inlet and/or discharge air flow (between 600 and 1500 feet per minute). The plenum shall provide single or multiple openings as shown on drawings and project schedule.

2. Access section shall be provided for access between hot water coil and cooling coil section, between future cooling section and fan inlet for servicing of fan and backdraft dampers of fan array., and where shown on drawings for servicing components. All access doors on the discharge side of supply air stream shall be inward opening against pressure.

G. Economizer Sections

1. Dampers shall be provided with opposed blade low leak airfoil damper blades. Dampers shall be hollow core galvanized steel airfoil blades, fully gasketed and have continuous vinyl seals between damper blades in a galvanized steel frame. Dampers shall have stainless steel jamb seals along end of dampers. Linkage and ABS plastic end caps shall be provided when return and outside air dampers sized for full airflow. Return and outside air dampers of different sizes or very large dampers and exhaust dampers must be driven separately. Damper Leakage: Leakage rate shall be less than two tenths of one percent leakage at 2 inches static pressure differential or 4 CFM/sq. ft at 1"wc whichever is more restrictive. Leakage rate tested in accordance with AMCA Standard 500. Openings shall be configured as shown on drawings.

H. Approved manufactures: Trane, Carrier, Daikin, or Johnson Controls only.

PART 3 EXECUTION

3.01 INSTALLATION

A. Install in accordance with manufacturer’s Installation & Maintenance instructions.

B. See Commissioning specification for additional requirements.

C. Manufacturer's Field Service: Engage a factory authorized service representative to inspect field assembled components and equipment installation, to include electrical and piping connections. Report results to A/E in writing. Inspection must include a complete startup checklist to include (as a minimum) the following: Completed Start-Up Checklists as found in manufacturer's IOM.

D. Engage a factory authorized service representative to perform startup service. Install clean filters. Measure and record electrical values for voltage and amperage. Refer to Division 23 "Testing, Adjusting and Balancing" and comply with provisions therein.

E. Engage a factory authorized service representative to train owner's maintenance personnel to adjust, operate and maintain the entire unit. Refer to Division 01 Section Closeout Procedures and Demonstration and Training.

3.02 ENVIRONMENTAL REQUIREMENTS

A. Do not operate units for any purpose, temporary or permanent, until ductwork is clean, filters are in place, bearings lubricated, and fan has been test run under observation.

3.03 EXTRA MATERIALS

A. Provide one extra set(s) filters for each unit as shown on project schedule.

B. Filters: Specified filters or approved temporary construction filters shall be installed in supply units prior to start-up or used for drying and/or temporary heat. See specifications related to ensuring ducts remain clean during construction for more information.

3.04 PIPING

A. Refer to applicable sections for piping, ductwork, insulation, painting, etc.

END OF SECTION

SECTION 26 00 00 - COMMON WORK RESULTS FOR ELECTRICAL

PART 1 - GENERAL

1.1 SUMMARY

A. Section Includes: Basic Electrical Requirements specifically applicable to Division 26 Sections.

1.2 SCOPE OF WORK

A. The specifications describe the quality and character of the materials and methods of installation.

B. The drawings and these specifications are complementary to each other in that all apparatus, materials and equipment outlined in the Drawings and/or specified herein shall be considered essential to the contract.

C. The drawings include plans of the building, with diagrammatic layouts showing approximate locations of equipment and devices. Before installing, study adjacent architectural features, and make installation in the most logical manner in accordance with Code and Regulatory Requirements.

D. The electrical symbols, notes, instructions and schedules on the drawings are included as part of these specifications.

1.3 WORK SCHEDULE AND SEQUENCE

A. Install work in stages to accommodate the Owner’s operational requirements. Coordinate schedule and hours of operation with the Owner prior to start of construction.

B. Coordinate installation sequence with detailed coordination shop drawings provided under Division 1.

1.4 REFERENCES

A. ANSI/NFPA 70 - National Electrical Code

B. National Electrical Safety Code

1.5 SUBMITTALS

A. Conform to Division 1 requirements.

B. Include a transmittal form clearly indicating the Project, the name of the Contractor and the contents of the submittal.

C. Include Contractor's stamp and signature indicating that the submittal has been reviewed and conforms to Contract Documents. Submittals without Contractor's stamp will be returned without review.

D. Identify deviations from Contract Documents, including variations and limitations. Review of a submittal does not constitute acceptance of deviations from the Contract Documents, unless such deviation is clearly indicated as such on the submittal, and specifically accepted as such.

E. Submit shop drawings and product data, grouped to include complete systems, products and accessories in a single package.

1. Reference catalog cuts and brochures of products to proper paragraph in specifications. Furnish numerical index by specification article number, listing product name, catalog number and reference to page number of submittal brochure.
2. Arrange the submittals in the same sequence as the specifications and reference in the upper right-hand corner, the particular specification provision for which each submittal is intended.
3. Cross reference individual catalog numbers of substitute products to number of specified materials.
4. Submit manufacturer's certification that equipment meets or exceeds the minimum requirements as specified.
5. Where materials, equipment and installations are specified to conform with societies or agencies such as ANSI, NECA, etc., submit certification of such compliance.
6. The submittal shall be complete and with catalog data and information properly marked to show, among other things, material capacity and performance to meet capacities or performance as specified or indicated
7. Mark dimensions and values in units to match those specified.

F. Review of the submittal is only for general conformance with design concept of project and general compliance with information given in the contract documents. The Contractor is responsible for confirmation and correlation of the dimensions, quantities and sizes, for information that pertains to fabrication methods or construction techniques, and for coordination work of all trades.

G. For items which are not manufactured and which have to be specifically fabricated, submit shop drawings and details.

H. Ordering of equipment prior to approval of submittals is done entirely at the risk of the Contractor.

1.6 COORDINATION SUBMITTALS

A. Develop detailed coordination shop drawings in conjunction with other trades, where required by complex and/or congested spaces, to minimize conflict, to allow for correct sequence of installation, and to provide all required clearances. See Division 1 for expanded requirements.

1.7 PROJECT RECORD DRAWINGS

A. Conform to Division 1 requirements.

B. Keep an accurate record of the work under this Contract, as it progresses, to be available for inspection at all times. See individual Division 26 Sections for specific requirements.

C. Upon completion of the work, transfer all changes and information onto a new set of reproducible drawings in an orderly and legible manner.

1.8 QUALITY ASSURANCE

A. For actual fabrication, installation and testing of the work, use only trained and experienced workers completely familiar with the equipment and materials, and the manufacturer's installation requirements.

B. Include the services of experienced superintendents for each sub-section who shall be constantly in charge of the work, together with the qualified journeymen, helpers, and laborers, required to properly unload, install, connect, adjust, start, operate and test the work involved, including equipment and materials furnished by others.

C. Perform the work under this section shall be in cooperation with the work of other trades to prevent conflict or interference and to aid in timely completion of the overall project.

1.9 DELIVERY, STORAGE AND HANDLING

A. Storage and handling of equipment and/or systems for project, whether it be onsite or offsite, shall be addressed by the Contractor's IAQ Management Plan. Plan must meet or exceed the recommended control measures of the "Sheet Metal and Air Conditioning National Contractors Association (SMACNA) IAQ Guidelines for Occupied Buildings Under Construction, 2nd Edition 2007, ANSI/SMACNA 008-2008 (Chapter 3)."

1.10 REGULATORY REQUIREMENTS

A. Conform to International Building Code, International Fire Code, and NFPA 101 Life Safety Code

B. Electrical: Conform to NFPA 70.

1.11 FIELD CONDITIONS

A. Visit the project site and become familiar with field conditions including accessibility and physical obstructions. Bid submission indicates familiarity with, and acceptance of, field conditions.

B. Separate Sections cover site, architectural and mechanical Work. Study the complete set of contract documents to become familiar with the entire Project including site, architectural and structural features and systems as related to Work in this Division. Pay special attention to Divisions featuring equipment requiring electrical interface including Owner-furnished equipment, elevator equipment, and mechanical systems (plumbing, hvac, fire sprinkler, controls).

C. Study and become familiar with any and all peculiarities and limitations of the spaces available for the installation of all work and materials furnished and installed under the contract. Exercise due and particular caution to determine that all parts of work are made quickly and easily accessible.

D. If any conflicts occur which necessitate departures from the Drawings, submit details of departures and reasons therefore for written approval. Do not install the affected equipment or related impacted wiring until approval is received.

E. Should there be omissions or discrepancies in the plans and specifications, or discrepancies from actual site conditions, bring them to the attention of the Engineer ten (10) working days in advance of the date of bid opening so that corrections or clarifications can be made.

F. Install Work in locations shown on Drawings, unless prevented by Project conditions. Coordinate work with that of other trades. Verify that adjacent and related construction conforms to contract documents and to coordination shop drawings.

G. If Project conditions, including changes initiated by other trades or discovery of conditions unknown at time of bid, require rearrangement of work, mark such changes on as-built drawings. If Project conditions require unspecified materials and methods, submit Request For Information (RFI) to the Architect with drawings showing the proposed alternative materials or methods. Obtain permission of the Architect before proceeding.

H. All RFIs must include a proposed solution. RFIs submitted without proposed solutions will be returned without review.

1.12 COORDINATION

A. Provide and coordinate all information, drawings or layouts of equipment or work under this section which affect the work of the other trades.

B. In case changes in the indicated locations or arrangements are necessary due to developed conditions in the construction, or rearrangement of furnishings, or equipment, these changes shall be made without extra cost to the Owner, provided the change is ordered before work directly connected is installed, and no extra materials are required.

1.13 EXISTING UTILITIES

A. The location of utilities shown on the plans are the best known information available at time of design. Contact the appropriate agencies and confirm the information and make arrangements for connection thereto, prior to excavation and installation of any piping or systems.

B. Perform exploratory excavation and/or use locate service as needed to confirm locations of existing underground utilities.

1.14 PROJECT SITE VISITS

A. Periodic visits to the project site by the Architect/Engineer are for the express purpose of verifying compliance with the contract documents. Such site visits shall not be construed as construction supervision, i.e., the Architect/Engineer assumes no responsibility for providing a safe place for the performance of the work by the Contractor or the Contractor's employees or the safety of the supplies of the Contractor. Neither shall such site visits relieve the Contractor of the responsibility for the discovery of his own errors and the correction of them, nor of the responsibility of properly performing the work.

PART 2 - PRODUCTS

2.1 MATERIALS AND EQUIPMENT

A. See Drawings and individual Sections of Division 26.

2.2 SUBSTITUTIONS

A. Conform to Division 1 requirements. Conformance to construction documents is the responsibility of the substitutor, regardless of approval.

B. Layout on drawings, including space allotted for clearances, access, etc., is based on performance and physical attributes of equipment specified and/or scheduled on plans. Coordinate with other systems, subsystems and trades as required when using substituted materials or equipment.

C. If the use of substitute materials or equipment requires alternate arrangement of equipment, fixtures, devices, wiring or accessories, prepare drawings showing proposed changes. Obtain permission of the Architect before proceeding.

D. If the use of substitute materials or equipment results in different performance than that provided by the specified materials or equipment, adjust Work as required to provide parity performance, at no additional cost to the Government. Obtain permission of the Engineer before proceeding.

E. If the use of substitute materials or equipment results in an increase in the cost, including changes to the Work of other trades, pay for any said increase in cost.

F. See Drawings and individual Sections of Division 26 for further specific information required for substitutions.

2.3 VALUE ENGINEERING

A. Conform to SUBSTITUTIONS above.

B. In addition, obtain a Professional 3rd Party review and opinion on the implementation of VE proposals.

2.4 REFERENCE TO SCHEDULES AND DRAWINGS

A. Refer to schedules on drawings for equipment identification, features, ratings, configuration, performance and design requirements.

PART 3 - EXECUTION

3.1 INSTALLATION

A. See Drawings and individual Sections of Division 26. In addition the following general requirements shall apply:

1. Obtain Manufacturer's printed installation instruction to aid in properly executing work of installing equipment whenever such instructions are available. Submit copies of such instructions to the Architect prior to time of installation.
2. Install equipment in a neat and workmanlike manner. Align, level and adjust for satisfactory appearance and operation. Install so that connection and disconnection of wiring and accessories can be made readily, and so that all parts are easily accessible for inspection, operation, maintenance and repair.

END OF SECTION 26 05 00

SECTION 260523 - CONTROL-VOLTAGE ELECTRICAL POWER CABLES

PART 1 - GENERAL

1.1 SUMMARY

A. Section Includes:

1. Category 5e balanced twisted pair cable.
2. Category 6 balanced twisted pair cable.
3. Balanced twisted pair cable hardware.
4. RS-485 cable.
5. Control cable.
6. Control-circuit conductors.

1.2 ACTION SUBMITTALS

A. Product Data: For each type of product.

1.3 INFORMATIONAL SUBMITTALS

A. Source quality-control reports.

B. Field quality-control reports.

PART 2 - PRODUCTS

2.1 PERFORMANCE REQUIREMENTS

A. Electrical Components, Devices, and Accessories: Listed and labeled as defined in NFPA 70, by a qualified testing agency, and marked for intended location and application.

B. Flame Travel and Smoke Density for Riser Cables in Non-Plenum Building Spaces: As determined by testing identical products according to UL 1666.

C. Flame Travel and Smoke Density for Cables in Non-Riser Applications and Non-Plenum Building Spaces: As determined by testing identical products according to UL 1685.

2.2 CATEGORY 5e BALANCED TWISTED PAIR CABLE

A. Description: Four-pair, balanced-twisted pair cable, certified to meet transmission characteristics of Category 5e cable at frequencies up to 100 MHz.

B. Standard: Comply with ICEA S-90-661, NEMA WC 63.1, and TIA-568-C.2 for Category 5e cables.

C. Conductors: 100 ohm, No. 24 AWG solid copper.

D. Shielding/Screening: Unshielded twisted pairs (UTP).

E. Cable Rating: Riser.

F. Jacket: White thermoplastic.

2.3 CATEGORY 6 BALANCED TWISTED PAIR CABLE

A. Description: Four-pair, balanced-twisted pair cable, certified to meet transmission characteristics of Category 6 cable at frequencies up to 250 MHz.

B. Standard: Comply with NEMA WC 66/ICEA S-116-732 and TIA-568-C.2 for Category 6 cables.

C. Conductors: 100 ohm, No. 23 AWG solid copper.

D. Shielding/Screening: Unshielded twisted pairs (UTP).

E. Cable Rating: Riser.

F. Jacket: Blue thermoplastic.

2.4 BALANCED TWISTED PAIR CABLE HARDWARE

A. Description: Hardware designed to connect, splice, and terminate balanced twisted pair copper communications cable.

B. General Requirements for Balanced Twisted Pair Cable Hardware:

1. Comply with the performance requirements of Category 5e or Category 6.
2. Comply with TIA-568-C.2, IDC type, with modules designed for punch-down caps or tools.
3. Cables must be terminated with connecting hardware of same category or higher.

C. Source Limitations: Obtain balanced twisted pair cable hardware from same manufacturer as balanced twisted pair cable, from single source.

D. Connecting Blocks: 110-style IDC for Category 5e, 110-style IDC for Category 6. Provide blocks for the number of cables terminated on the block, plus 25 percent spare, integral with connector bodies, including plugs and jacks where indicated.

E. Cross-Connect: Modular array of connecting blocks arranged to terminate building cables and permit interconnection between cables.

1. Number of Terminals per Field: One for each conductor in assigned cables.

F. Patch Panel: Modular panels housing numbered jack units with IDC-type connectors at each jack location for permanent termination of pair groups of installed cables.

1. Features:

a. Universal T568A and T568B wiring labels.
b. Labeling areas adjacent to conductors.
c. Replaceable connectors.

d. 24 or 48 ports.

2. Construction: 16-gauge steel and mountable on 19 inch (483 mm) equipment racks.
3. Number of Jacks per Field: One for each four-pair cable indicated.

G. Patch Cords: Factory-made, four-pair cables in 36 inch (900 mm)lengths; terminated with an eight-position modular plug at each end.

1. Patch cords must have bend-relief-compliant boots and color-coded icons to ensure performance. Patch cords must have latch guards to protect against snagging.
2. Patch cords must have color-coded boots for circuit identification.

H. Plugs and Plug Assemblies:

1. Male; eight position; color-coded modular telecommunications connector designed for termination of a single four-pair 100 ohm unshielded or shielded balanced twisted pair cable.
2. Comply with IEC 60603-7-1, IEC 60603-7-2, IEC 60603-7-3, IEC 60603-7-4, and IEC 60603-7.5.
3. Marked to indicate transmission performance.

I. Jacks and Jack Assemblies:

1. Female; eight position; modular; fixed telecommunications connector designed for termination of a single four-pair 100 ohm unshielded or shielded balanced twisted pair cable.
2. Designed to snap-in to a patch panel or faceplate.
3. Standards:

a. Category 5e, unshielded balanced twisted pair cable must comply with IEC 60603-7-2 or 7-3.
b. Category 6, unshielded balanced twisted pair cable must comply with IEC 60603-7-4 or 7-5.

4. Marked to indicate transmission performance.

J. Faceplate:

1. Four port, vertical single-gang faceplates designed to mount to single-gang wall boxes.
2. Plastic Faceplate: High-impact plastic. Coordinate color with Section 262726 "Wiring Devices."
3. For use with snap-in jacks accommodating any combination of balanced twisted pair, optical fiber, and coaxial work area cords.

K. Legend:

1. Machine printed, in the field, using adhesive-tape label.
2. Snap-in, clear-label covers and machine-printed paper inserts.

2.5 RS-232 CABLE

A. PVC-Jacketed, TIA 232-F:

1. Three, No. 22 AWG, stranded (7x30) tinned copper conductors.

2. Polypropylene insulation.
3. Aluminum foil-polyester tape shield with 100 percent shield coverage.
4. PVC jacket.
5. Conductors are cabled on common axis with No. 24 AWG, stranded (7x32) tinned copper drain wire.
6. NFPA 70 Type: Type CM.
7. Flame Resistance: Comply with UL 1581.

2.6 RS-485 CABLE

A. Standard Cable: NFPA 70, Type CMG.

1. Paired, one pair, twisted, No. 22 AWG, stranded (7x30) tinned-copper conductors.
2. PVC insulation.
3. Unshielded.
4. PVC jacket.
5. Flame Resistance: Comply with UL 1685.

2.7 CONTROL CABLE

A. Paired Cable: NFPA 70, Type CMG.

1. One pair, twisted, No. 16 AWG, stranded (19x29) tinned-copper conductors.
2. PVC insulation.
3. Unshielded.
4. PVC jacket.
5. Flame Resistance: Comply with UL 1685.

2.8 CONTROL-CIRCUIT CONDUCTORS

A. Class 1 Control Circuits: Stranded copper, Type THHN/THWN-2, complying with UL 83 in raceway.

B. Class 2 Control Circuits: Stranded copper, Type THHN/THWN-2, complying with UL 83 in raceway or power-limited cable, concealed in building finishes.

C. Class 3 Remote-Control and Signal Circuits: Stranded copper, Type THHN/THWN-2, complying with UL 83 in raceway or power-limited cable, concealed in building finishes.

2.9 SOURCE QUALITY CONTROL

A. Factory test twisted pair cables according to TIA-568-C.2.

B. Cable will be considered defective if it does not pass tests and inspections.

C. Prepare test and inspection reports.

PART 3 - EXECUTION

3.1 EXAMINATION

A. Test cables on receipt at Project site.

1. Test each pair of twisted pair cable for open and short circuits.

3.2 INSTALLATION OF RACEWAYS AND BOXES

A. Comply with requirements in Section 260533 "Raceways and Boxes for Electrical Systems" for raceway selection and installation requirements for boxes, conduits, and wireways as supplemented or modified in this Section.

1. Outlet boxes for cables must be no smaller than 4 inch (102 mm) square by 2-1/8 inch (53 mm) deep with extension ring sized to bring edge of ring to within 1/8 inch (3.1 mm) of the finished wall surface.
2. Flexible metal conduit must not be used.

B. Comply with TIA-569-D for pull-box sizing and length of conduit and number of bends between pull points.

C. Install manufactured conduit sweeps and long-radius elbows if possible.

3.3 INSTALLATION OF CONDUCTORS AND CABLES

A. Comply with NECA 1.

B. General Requirements for Cabling:

1. Comply with TIA-568-C Series of standards.
2. Comply with BICSI ITSIMM, Ch. 5, "Copper Structured Cabling Systems."
3. Terminate all conductors; cable must not contain unterminated elements. Make terminations only at indicated outlets, terminals, and cross-connect and patch panels.
4. Cables may not be spliced and must be continuous from terminal to terminal. Do not splice cable between termination, tap, or junction points.
5. Cables serving a common system may be grouped in a common raceway. Install network cabling and control wiring and cable in separate raceway from power wiring. Do not group conductors from different systems or different voltages.
6. Secure and support cables at intervals not exceeding 30 inch (760 mm) and not more than 6 inch (150 mm) from cabinets, boxes, fittings, outlets, racks, frames, and terminals.
7. Bundle, lace, and train conductors to terminal points without exceeding manufacturer's limitations on bending radii, but not less than radii specified in BICSI ITSIMM, Ch. 5, "Copper Structured Cabling Systems." Install lacing bars and distribution spools.
8. Do not install bruised, kinked, scored, deformed, or abraded cable. Remove and discard cable if damaged during installation and replace it with new cable.
9. Cold-Weather Installation: Bring cable to room temperature before dereeling. Do not use heat lamps for heating.
10. Pulling Cable: Comply with BICSI ITSIMM, Ch. 5, "Copper Structured Cabling Systems." Monitor cable pull tensions.
11. Support: Do not allow cables to lie on removable ceiling tiles.

12. Secure: Fasten securely in place with hardware specifically designed and installed so as to not damage cables.
13. Provide strain relief.
14. Keep runs short. Allow extra length for connecting to terminals. Do not bend cables in a radius less than 10 times the cable OD. Use sleeves or grommets to protect cables from vibration at points where they pass around sharp corners and through penetrations.
15. Ground wire must be copper, and grounding methods must comply with IEEE C2. Demonstrate ground resistance.

C. Balanced Twisted Pair Cable Installation:

1. Comply with TIA-568-C.2.
2. Do not untwist balanced twisted pair cables more than 1/2 inch (12 mm) at the point of termination to maintain cable geometry.

D. Installation of Control-Circuit Conductors:

1. Install wiring in raceways.
2. Use insulated spade lugs for wire and cable connection to screw terminals.
3. Comply with requirements specified in Section 260533 "Raceways and Boxes for Electrical Systems."

E. Separation from EMI Sources:

1. Comply with BICSI TDMM and TIA-569-D recommendations for separating unshielded copper voice and data communications cable from potential EMI sources including electrical power lines and equipment.

2. Separation between communications cables in grounded metallic raceways and unshielded power lines or electrical equipment must be as follows:

    a. Electrical Equipment or Circuit Rating Less Than 2 kVA: A minimum of 2-1/2 inch (64 mm).
    b. Electrical Equipment or Circuit Rating between 2 and 5 kVA: A minimum of 6 inch (150 mm).
    c. Electrical Equipment or Circuit Rating More Than 5 kVA: A minimum of 12 inch (305 mm).

3. Separation between communications cables in grounded metallic raceways and power lines and electrical equipment located in grounded metallic conduits or enclosures must be as follows:

    a. Electrical Equipment or Circuit Rating Less Than 2 kVA: No requirement.
    b. Electrical Equipment or Circuit Rating between 2 and 5 kVA: A minimum of 3 inch (75 mm).
    c. Electrical Equipment or Circuit Rating More Than 5 kVA: A minimum of 6 inch (150 mm).

4. Separation between Communications Cables and Electrical Motors and Transformers, 5 kVA or 5 HP and Larger: A minimum of 48 inch (1200 mm).
5. Separation between Communications Cables and Fluorescent Fixtures: A minimum of 5 inch (127 mm).

3.4 REMOVAL OF CONDUCTORS AND CABLES

A. Remove abandoned conductors and cables. Abandoned conductors and cables are those installed that are not terminated at equipment and are not identified with a tag for future use.

3.5 CONTROL-CIRCUIT CONDUCTORS

A. Minimum Conductor Sizes:

1. Class 1 remote-control and signal circuits; No 14 AWG.
2. Class 2 low-energy, remote-control, and signal circuits; No. 16 AWG.
3. Class 3 low-energy, remote-control, alarm, and signal circuits; No 12 AWG.

3.6 FIRESTOPPING

A. Comply with TIA-569-D, Annex A, "Firestopping."

3.7 GROUNDING

A. For control-voltage wiring and cabling, comply with requirements in Section 260526 "Grounding and Bonding for Electrical Systems."

3.8 IDENTIFICATION

A. Comply with requirements for identification specified in Section 260553 "Identification for Electrical Systems."

B. Identify each wire on each end and at each terminal with a number-coded identification tag. Each wire must have a unique tag.

3.9 FIELD QUALITY CONTROL

A. Tests and Inspections:

1. Visually inspect cable jacket materials for UL or third-party certification markings. Inspect cabling terminations to confirm color-coding for pin assignments, and inspect cabling connections to confirm compliance with TIA-568-C.1.
2. Visually inspect cable placement, cable termination, grounding and bonding, equipment and patch cords, and labeling of all components.
3. Test cabling for direct-current loop resistance, shorts, opens, intermittent faults, and polarity between conductors. Test operation of shorting bars in connection blocks. Test cables after termination, but not after cross-connection.

    a. Test instruments must meet or exceed applicable requirements in TIA-568-C.2. Perform tests with a tester that complies with performance requirements in its "Test Instruments (Normative)" Annex, complying with measurement accuracy specified in its "Measurement Accuracy (Informative)" Annex. Use only test cords and adapters that are qualified by test equipment manufacturer for channel or link test configuration.

B. Document data for each measurement. Print data for submittals in a summary report that is formatted using Table 10.1 in BICSI TDMM as a guide, or transfer the data from the instrument to the computer, save as text files, print, and submit.

C. End-to-end cabling will be considered defective if it does not pass tests and inspections.

D. Prepare test and inspection reports.

END OF SECTION 260523

SECTION 260526 - GROUNDING AND BONDING FOR ELECTRICAL SYSTEMS

PART 1 - GENERAL

1.1 SUMMARY

A. Section includes grounding and bonding systems and equipment.

1.2 ACTION SUBMITTALS

A. Product Data: For each type of product indicated.

PART 2 - PRODUCTS

2.1 SYSTEM DESCRIPTION

A. Electrical Components, Devices, and Accessories: Listed and labeled as defined in NFPA 70, by a qualified testing agency, and marked for intended location and application.

B. Comply with UL 467 for grounding and bonding materials and equipment.

2.2 MANUFACTURERS

A. Manufacturers: Subject to compliance with requirements, available manufacturers offering products that may be incorporated into the Work include, but are not limited to the following:

1. Burndy; brand of Hubbell Electrical Solutions; Hubbell Incorporated.
2. ERICO; brand of nVent Electrical plc.
3. ILSCO.
4. O-Z/Gedney; brand of Emerson Electric Co., Automation Solutions, Appleton Group.

2.3 CONDUCTORS

A. Insulated Conductors: Copper or tinned-copper wire or cable insulated for 600 V unless otherwise required by applicable Code or authorities having jurisdiction.

B. Bare Copper Conductors:

1. Solid Conductors: ASTM B3.
2. Stranded Conductors: ASTM B8.
3. Tinned Conductors: ASTM B33.
4. Bonding Cable: 28 kcmil, 14 strands of No. 17 AWG conductor, 1/4 inch (6 mm) in diameter.
5. Bonding Conductor: No. 4 or No. 6 AWG, stranded conductor.
6. Bonding Jumper: Copper tape, braided conductors terminated with copper ferrules; 1-5/8 inch (41 mm) wide and 1/16 inch (1.6 mm) thick.
7. Tinned Bonding Jumper: Tinned-copper tape, braided conductors terminated with copper ferrules; 1-5/8 inch (41 mm) wide and 1/16 inch (1.6 mm) thick.

2.4 CONNECTORS

A. Listed and labeled by an NRTL acceptable to authorities having jurisdiction for applications in which used and for specific types, sizes, and combinations of conductors and other items connected.

B. Cable-to-Cable Connectors: Compression type, copper or copper alloy.

C. Conduit Hubs: Mechanical type, terminal with threaded hub.

D. Lay-in Lug Connector: Mechanical type, copper rated for direct burial terminal with set screw.

E. Straps: Solid copper, cast-bronze clamp or copper lugs. Rated for 600 A.

PART 3 - EXECUTION

3.1 APPLICATIONS

A. Conductors: Install solid conductor for No. 8 AWG and smaller, and stranded conductors for No. 6 AWG and larger unless otherwise indicated.

B. Grounding Conductors: Green-colored insulation with continuous yellow stripe.

C. Conductor Terminations and Connections:

1. Pipe and Equipment Grounding Conductor Terminations: Bolted connectors.

3.2 EQUIPMENT GROUNDING

A. Install insulated equipment grounding conductors with all feeders and branch circuits.

B. Air-Duct Equipment Circuits: Install insulated equipment grounding conductor to duct-mounted electrical devices operating at 120 V and more, including air cleaners, heaters, dampers, humidifiers, and other duct electrical equipment. Bond conductor to each unit and to air duct and connected metallic piping.

3.3 INSTALLATION

A. Grounding Conductors: Route along shortest and straightest paths possible unless otherwise indicated or required by Code. Avoid obstructing access or placing conductors where they may be subjected to strain, impact, or damage.

B. Bonding Straps and Jumpers: Install in locations accessible for inspection and maintenance except where routed through short lengths of conduit.

1. Bonding to Equipment Mounted on Vibration Isolation Hangers and Supports: Install bonding so vibration is not transmitted to rigidly mounted equipment.
2. Use irreversible compression connectors for outdoor locations; if a disconnect-type connection is required, use a bolted clamp.

C. Bonding Interior Metal Ducts: Bond metal air ducts to equipment grounding conductors of associated fans, blowers, electric heaters, and air cleaners. Install bonding jumper to bond across flexible duct connections to achieve continuity.

D. Connections: Make connections so possibility of galvanic action or electrolysis is minimized. Select connectors, connection hardware, conductors, and connection methods so metals in direct contact are galvanically compatible.

1. Use electroplated or hot-tin-coated materials to ensure high conductivity and to make contact points closer in order of galvanic series.
2. Make connections with clean, bare metal at points of contact.
3. Coat and seal connections having dissimilar metals with inert material to prevent future penetration of moisture to contact surfaces.

3.4 FIELD QUALITY CONTROL

A. Tests and Inspections:

1. After installing grounding system but before permanent electrical circuits have been energized, test for compliance with requirements.
2. Inspect physical and mechanical condition. Verify tightness of accessible, bolted, electrical connections with a calibrated torque wrench according to manufacturer's written instructions.

B. Grounding system will be considered defective if it does not pass tests and inspections.

C. Prepare test and inspection reports.

END OF SECTION 260526

SECTION 260529 - HANGERS AND SUPPORTS FOR ELECTRICAL SYSTEMS

PART 1 - GENERAL

1.1 SUMMARY

A. Section Includes:

1. Support, anchorage, and attachment components.
2. Fabricated metal equipment support assemblies.

1.2 ACTION SUBMITTALS

A. Product Data: For each type of product.

1. Include construction details, material descriptions, dimensions of individual components and profiles, and finishes for the following:

a. Slotted support systems, hardware, and accessories.
b. Clamps.
c. Hangers.
d. Sockets.
e. Eye nuts.
f. Fasteners.
g. Anchors.
h. Saddles.
i. Brackets.

2. Include rated capacities and furnished specialties and accessories.

B. Shop Drawings: For fabrication and installation details for electrical hangers and support systems.

1. Hangers. Include product data for components.
2. Slotted support systems.
3. Equipment supports.
4. Vibration Isolation Base Details: Detail fabrication including anchorages and attachments to structure and to supported equipment. Include adjustable motor bases, rails, and frames for equipment mounting.

1.3 INFORMATIONAL SUBMITTALS

A. Welding certificates.

PART 2 - PRODUCTS

2.1 PERFORMANCE REQUIREMENTS

A. Surface-Burning Characteristics: Comply with ASTM E84; testing by a qualified testing agency. Identify products with appropriate markings of applicable testing agency.

1. Flame Rating: Class 1.
2. Self-extinguishing according to ASTM D635.

2.2 SUPPORT, ANCHORAGE, AND ATTACHMENT COMPONENTS

A. Steel Slotted Support Systems: Preformed steel channels and angles with minimum 13/32 inch (10 mm) diameter holes at a maximum of 8 inch (200 mm) on center in at least one surface.

1. Manufacturers: Subject to compliance with requirements, available manufacturers offering products that may be incorporated into the Work include, but are not limited to the following:

a. Cooper B-line; brand of Eaton, Electrical Sector.
b. Unistrut; Atkore International.

2. Standard: Comply with MFMA-4 factory-fabricated components for field assembly.
3. Material for Channel, Fittings, and Accessories: Galvanized steel.
4. Channel Width: Selected for applicable load criteria.
5. Metallic Coatings: Hot-dip galvanized after fabrication and applied according to MFMA-4.
6. Nonmetallic Coatings: Manufacturer's standard PVC, polyurethane, or polyester coating applied according to MFMA-4.
7. Painted Coatings: Manufacturer's standard painted coating applied according to MFMA-4.
8. Protect finishes on exposed surfaces from damage by applying a strippable, temporary protective covering before shipping.

B. Conduit and Cable Support Devices: Steel hangers, clamps, and associated fittings, designed for types and sizes of raceway or cable to be supported.

C. Structural Steel for Fabricated Supports and Restraints: ASTM A36/A36M steel plates, shapes, and bars; black and galvanized.

D. Mounting, Anchoring, and Attachment Components: Items for fastening electrical items or their supports to building surfaces include the following:

1. Powder-Actuated Fasteners: Threaded-steel stud, for use in hardened portland cement concrete, steel, or wood, with tension, shear, and pullout capacities appropriate for supported loads and building materials where used.

2. Mechanical-Expansion Anchors: Insert-wedge-type, stainless steel, for use in hardened portland cement concrete, with tension, shear, and pullout capacities appropriate for supported loads and building materials where used.
3. Concrete Inserts: Steel or malleable-iron, slotted support system units are similar to MSS Type 18 units and comply with MFMA-4 or MSS SP-58.
4. Clamps for Attachment to Steel Structural Elements: MSS SP-58 units are suitable for attached structural element.

5. Through Bolts: Structural type, hex head, and high strength. Comply with ASTM F3125/F3125M, Grade A325 (Grade A325M).
6. Toggle Bolts: Stainless steel springhead type.
7. Hanger Rods: Threaded steel.

2.3 FABRICATED METAL EQUIPMENT SUPPORT ASSEMBLIES

A. Description: Welded or bolted structural-steel shapes, shop or field fabricated to fit dimensions of supported equipment.

PART 3 - EXECUTION

3.1 SELECTION

A. Comply with the following standards for selection and installation of hangers and supports, except where requirements on Drawings or in this Section are stricter:

1. NECA NEIS 101
2. NECA NEIS 102.
3. NECA NEIS 105.
4. NECA NEIS 111.

B. Comply with requirements in Section 078413 "Penetration Firestopping" for firestopping materials and installation for penetrations through fire-rated walls, ceilings, and assemblies.

C. Comply with requirements for raceways and boxes specified in Section 260533 "Raceway and Boxes for Electrical Systems."

D. Provide seismic controls with hangers and supports in accordance with requirements specified in "Section 260548.16 "Seismic Controls for Electrical Systems."

E. Maximum Support Spacing and Minimum Hanger Rod Size for Raceways: Space supports for EMT, IMC, and ERMC as required by NFPA 70. Minimum rod size must be 1/4 inch (6 mm) in diameter.

F. Multiple Raceways or Cables: Install trapeze-type supports fabricated with steel slotted support system, sized so capacity can be increased by at least 25 percent in future without exceeding specified design load limits.

1. Secure raceways and cables to these supports with two-bolt conduit clamps or single-bolt conduit clamps or single-bolt conduit clamps using spring friction action for retention in support channel.

G. Spring-steel clamps designed for supporting single conduits without bolts may be used for 1-1/2 inch (38 mm) and smaller raceways serving branch circuits and communication systems above suspended ceilings, and for fastening raceways to trapeze supports.

3.2 INSTALLATION OF SUPPORTS

A. Comply with NECA NEIS 101 for installation requirements except as specified in this article.

B. Raceway Support Methods: In addition to methods described in NECA NEIS 1, EMT may be supported by openings through structure members, in accordance with NFPA 70.

C. Strength of Support Assemblies: Where not indicated, select sizes of components so strength will be adequate to carry present and future static loads within specified loading limits. Minimum static design load used for strength determination must be weight of supported components plus 200 lb (90 kg).

D. Mounting and Anchorage of Surface-Mounted Equipment and Components: Anchor and fasten electrical items and their supports to building structural elements by the following methods unless otherwise indicated by code:

1. To Wood: Fasten with lag screws or through bolts.
2. To New Concrete: Bolt to concrete inserts.
3. To Masonry: Approved toggle-type bolts on hollow masonry units and expansion anchor fasteners on solid masonry units.
4. To Existing Concrete: Expansion anchor fasteners.
5. Instead of expansion anchors, powder-actuated driven threaded studs provided with lock washers and nuts may be used in existing standard-weight concrete 4 inch (100 mm) thick or greater. Do not use for anchorage to lightweight-aggregate concrete or for slabs less than 4 inch (100 mm) thick.
6. To Steel: Beam clamps (MSS SP-58, Type 19, 21, 23, 25, or 27), complying with MSS SP-69.
7. To Light Steel: Sheet metal screws.
8. Items Mounted on Hollow Walls and Nonstructural Building Surfaces: Mount cabinets, panelboards, disconnect switches, control enclosures, pull and junction boxes, transformers, and other devices on slotted-channel racks attached to substrate.

E. Drill holes for expansion anchors in concrete at locations and to depths that avoid the need for reinforcing bars.

3.3 INSTALLATION OF FABRICATED METAL SUPPORTS

A. Comply with installation requirements in Section 055000 "Metal Fabrications" for site-fabricated metal supports.

B. Cut, fit, and place miscellaneous metal supports accurately in location, alignment, and elevation to support and anchor electrical materials and equipment.

C. Field Welding: Comply with AWS D1.1/D1.1M. Submit welding certificates.

3.4 PAINTING

A. Touchup:

1. Clean field welds and abraded areas of shop paint. Paint exposed areas immediately after erecting hangers and supports. Use same materials as used for shop painting. Comply with SSPC-PA 1 requirements for touching up field-painted surfaces.

   a. Apply paint by brush or spray to provide minimum dry film thickness of 2.0 mils (0.05 mm).

B. Galvanized Surfaces: Clean welds, bolted connections, and abraded areas and apply galvanizing-repair paint to comply with ASTM A780.

END OF SECTION 260529

SECTION 260533 - RACEWAY AND BOXES FOR ELECTRICAL SYSTEMS

PART 1 - GENERAL

1.1 SUMMARY

A. Section Includes:

1. Type EMT-S raceways and elbows.
2. Type ERMC-S raceways.
3. Type FMC-S and Type FMC-A raceways.
4. Type LFMC raceways.
5. Fittings for conduit, tubing, and cable.
6. Threaded metal joint compound.
7. Wireways and auxiliary gutters.
8. Metallic outlet boxes, device boxes, rings, and covers.
9. Cabinets, cutout boxes, junction boxes, pull boxes, and miscellaneous enclosures.
10. Cover plates for device boxes.
11. Hoods for outlet boxes.

1.2 ACTION SUBMITTALS

A. Product Data: For the following:

1. Wireways and auxiliary gutters.
2. Cabinets, cutout boxes, and miscellaneous enclosures.

PART 2 - PRODUCTS

2.1 TYPE EMT-S RACEWAYS AND ELBOWS

A. Performance Criteria:

1. Regulatory Requirements: Listed and labeled in accordance with NFPA 70 and marked for intended location and use.
2. General Characteristics: UL 797 and UL Category Control Number FJMX.

B. Steel Electrical Metal Tubing (EMT-S) and Elbows:

1. Material: Steel.
2. Options:

a. Exterior Coating: Zinc.
b. Interior Coating: Zinc.
c. Minimum Trade Size: Metric designator 21 (trade size 3/4).

2.2 TYPE ERMC-S RACEWAYS, ELBOWS, COUPLINGS, AND NIPPLES

A. Performance Criteria:

1. Regulatory Requirements: Listed and labeled in accordance with NFPA 70 and marked for intended location and use.
2. General Characteristics: UL 6 and UL Category Control Number DYIX.

B. Galvanized-Steel Electrical Rigid Metal Conduit (ERMC-S-G), Elbows, Couplings, and Nipples:

1. Exterior Coating: Zinc.
2. Options:

a. Interior Coating: Zinc.
b. Minimum Trade Size: Metric designator 21 (trade size 3/4).

2.3 TYPE FMC-S RACEWAYS

A. Performance Criteria:

1. Regulatory Requirements: Listed and labeled in accordance with NFPA 70 and marked for intended location and use.
2. General Characteristics: UL 1 and UL Category Control Number DXUZ.

B. Steel Flexible Metal Conduit (FMC-S):

1. Material: Steel.
2. Minimum Trade Size: Metric designator 21 (trade size 3/4).

2.4 TYPE LFMC RACEWAYS

A. Performance Criteria:

1. Regulatory Requirements: Listed and labeled in accordance with NFPA 70 and marked for intended location and use.
2. General Characteristics: UL 360 and UL Category Control Number DXHR.

B. Steel Liquidtight Flexible Metal Conduit (LFMC-S):

1. Material: Steel.
2. Minimum Trade Size: Metric designator 21 (trade size 3/4).

2.5 FITTINGS FOR CONDUIT, TUBING, AND CABLE

A. Performance Criteria:

1. Regulatory Requirements: Listed and labeled in accordance with NFPA 70 and marked for intended location and use.

B. Fittings for Type ERMC Raceways:

1. General Characteristics: UL 514B and UL Category Control Number DWTT.

2. Options:

    a. Material: Steel.
    b. Coupling Method: Compression coupling or Raintight compression coupling with distinctive color gland nut or Setscrew coupling. Setscrew couplings with only single screw per conduit are unacceptable.
    c. Expansion and Deflection Fittings: UL 651 with flexible external bonding jumper.

C. Fittings for Type EMT Raceways:

1. General Characteristics: UL 514B and UL Category Control Number FKAV.
2. Options:

    a. Material: Steel.
    b. Coupling Method: Compression coupling or Raintight compression coupling with distinctive color gland nut or Setscrew coupling. Setscrew couplings with only single screw per conduit are unacceptable.
    c. Expansion and Deflection Fittings: UL 651 with flexible external bonding jumper.

D. Fittings for Type FMC Raceways:

1. General Characteristics: UL 514B and UL Category Control Number ILNR.

2.6 ELECTRICALLY CONDUCTIVE CORROSION-RESISTANT COMPOUNDS FOR THREADED CONDUIT

A. Performance Criteria:

1. Regulatory Requirements: Listed and labeled in accordance with NFPA 70 and marked for intended location and use.
2. General Characteristics: UL 2419 and UL Category Control Number FOIZ.

2.7 WIREWAYS AND AUXILIARY GUTTERS

A. Performance Criteria:

1. Regulatory Requirements: Listed and labeled in accordance with NFPA 70 and marked for intended location and use.
2. General Characteristics: UL 870 and UL Category Control Number ZOYX.

B. Metal Wireways and Auxiliary Gutters:

1. Additional Characteristics:

    a. Fittings and Accessories: Include covers, couplings, offsets, elbows, expansion joints, adapters, hold-down straps, end caps, and other fittings to match and mate with wireways as required for complete system.
    b. Finish: Manufacturer's standard enamel finish.

2. Options:

    a. Degree of Protection: Type 1 unless otherwise indicated.
    b. Wireway Covers: Screw-cover type unless otherwise indicated.

2.8 METALLIC OUTLET BOXES, DEVICE BOXES, RINGS, AND COVERS

A. Performance Criteria:

1. Regulatory Requirements: Listed and labeled in accordance with NFPA 70 and marked for intended location and use.
2. General Characteristics: UL 514A and UL Category Control Number QCIT.

B. Metallic Outlet Boxes:

1. Description: Box having pryout openings, knockouts, threaded entries, or hubs in either the sides of the back, or both, for entrance of conduit, conduit or cable fittings, or cables, with provisions for mounting outlet box cover, but without provisions for mounting wiring device directly to box.
2. Options:

a. Material: Sheet steel or Cast metal.
b. Sheet Metal Depth: Minimum 2.5 inch (65 mm).
c. Cast-Metal Depth: Minimum 2.4 inch (60.3 mm).

C. Metallic Conduit Bodies:

1. Description: Means for providing access to interior of conduit or tubing system through one or more removable covers at junction or terminal point. In the United States, conduit bodies are listed in accordance with outlet box requirements.

D. Metallic Device Boxes:

1. Description: Box with provisions for mounting wiring device directly to box.
2. Options:

a. Material: Sheet steel or Cast metal.
b. Sheet Metal Depth: minimum 2.5 inch (65 mm).
c. Cast-Metal Depth: minimum 2.4 inch (60.3 mm).

E. Metallic Extension Rings:

1. Description: Ring intended to extend sides of outlet box or device box to increase box depth, volume, or both.

2.9 CABINETS, CUTOUT BOXES, JUNCTION BOXES, PULL BOXES, AND MISCELLANEOUS ENCLOSURES

A. Performance Criteria:

1. Regulatory Requirements: Listed and labeled in accordance with NFPA 70 and marked for intended location and use.
2. General Characteristics:

a. Non-Environmental Characteristics: UL 50.
b. Environmental Characteristics: UL 50E.

B. Indoor Sheet Metal Cabinets:

1. Description: Enclosure provided with frame, mat, or trim in which swinging door or doors are or can be hung.
2. Additional Characteristics: UL Category Control Number CYIV.
3. Degree of Protection: Type 1.

C. Indoor Sheet Metal Cutout Boxes:

1. Description: Enclosure that has swinging doors or covers secured directly to and telescoping with walls of enclosure.
2. Additional Characteristics: UL Category Control Number CYIV.
3. Degree of Protection: Type 1.

D. Indoor Sheet Metal Junction and Pull Boxes:

1. Description: Box with a blank cover that serves the purpose of joining different runs of raceway or cable.
2. Additional Characteristics: UL Category Control Number BGUZ.
3. Degree of Protection: Type 1.

E. Indoor Cast-Metal Junction and Pull Boxes:

1. Description: Box with a blank cover that serves the purpose of joining different runs of raceway or cable.
2. Additional Characteristics: UL Category Control Number BGUZ.
3. Degree of Protection: Type 1.

F. Indoor Sheet Metal Miscellaneous Enclosures:

1. Additional Characteristics: UL 1773 and UL Category Control Number XCKT.
2. Degree of Protection: Type 1.

G. Outdoor Sheet Metal Cabinets:

1. Description: Enclosure provided with frame, mat, or trim in which swinging door or doors are or can be hung.
2. Additional Characteristics: UL Category Control Number CYIV.
3. Degree of Protection: Type 3R.

H. Outdoor Sheet Metal Cutout Boxes:

1. Description: Enclosure that has swinging doors or covers secured directly to and telescoping with walls of enclosure.
2. Additional Characteristics: UL Category Control Number CYIV.
3. Degree of Protection: Type 3R.

I. Outdoor Sheet Metal Junction and Pull Boxes:

1. Description: Box with a blank cover that serves the purpose of joining different runs of raceway or cable.
2. Additional Characteristics: UL Category Control Number BGUZ.
3. Degree of Protection: Type 3R.

J. Outdoor Cast-Metal Junction and Pull Boxes:

1. Description: Box with a blank cover that serves the purpose of joining different runs of raceway or cable.
2. Additional Characteristics: UL Category Control Number BGUZ.
3. Degree of Protection: Type 3R.

K. Outdoor Sheet Metal Miscellaneous Enclosures:

1. Additional Characteristics: UL 1773 and UL Category Control Number XCKT.
2. Degree of Protection: Type 3R.

2.10 COVER PLATES FOR DEVICES BOXES

A. Performance Criteria:

1. Regulatory Requirements: Listed and labeled in accordance with NFPA 70 and marked for intended location and use.
2. General Characteristics:

a. Reference Standards: UL 514D and UL Category Control Numbers QCIT and QCMZ.
b. Wallplate-Securing Screws: Metal with head color to match wallplate finish.

B. Metallic Cover Plates for Device Boxes:

1. Options:

a. Damp and Wet Locations: Listed, labeled, and marked for location and use. Provide gaskets and accessories necessary for compliance with listing.
b. Wallplate Material: Galvanized steel.

2.11 HOODS FOR OUTLET BOXES

A. Performance Criteria:

1. Regulatory Requirements: Listed and labeled in accordance with NFPA 70 and marked for intended location and use.
2. General Characteristics:

a. Reference Standards:

1) UL 514D and UL Category Control Numbers QCIT and QCMZ.
2) Receptacle, hood, cover plate, gaskets, and seals comply with UL 498 Supplement SA when mated with box or enclosure complying with UL 514A, UL 514C, or UL 50E.

b. Mounts to box using fasteners different from wiring device.

B. Retractable or Reattachable Hoods for Outlet Boxes:

1. Provides clear, weatherproof, "while-in-use" cover.

C. Extra-Duty, While-in-Use Hoods for Outlet Boxes:

1. Additional Characteristics: Marked "Extra-Duty" in accordance with UL 514D.
2. Provides gray, weatherproof, "while-in-use" cover.
3. Manufacturer may combine nonmetallic device box with hood as extra-duty rated assembly.

PART 3 - EXECUTION

3.1 SELECTION OF RACEWAYS

A. Unless more stringent requirements are specified in Contract Documents or manufacturers' written instructions, comply with NFPA 70 for selection of raceways. Consult Architect for resolution of conflicting requirements.

B. Outdoors:

1. Exposed and Subject to Severe Physical Damage: ERMC.
2. Exposed and Not Subject to Physical Damage: ERMC or Corrosion-resistant EMT.
3. Concealed Aboveground: EMT.
4. Connection to Vibrating Equipment (Including Transformers and Hydraulic, Pneumatic, Electric Solenoid, or Motor-Driven Equipment): LFMC.

C. Indoors:

1. Exposed and Subject to Severe Physical Damage: ERMC. Subject to severe physical damage includes the following locations:

   a. Loading docks.
   b. Corridors used for traffic of vehicles, mechanized carts, forklifts, and pallet-handling units.
   c. Mechanical rooms.

2. Exposed and Subject to Physical Damage: ERMC. Subject to physical damage includes the following locations:

   a. Locations less than 2.5 m (8 ft) above finished floor.
   b. Stub-ups to above suspended ceilings.

3. Exposed and Not Subject to Physical Damage: ERMC or EMT.
4. Concealed in Ceilings and Interior Walls and Partitions: EMT.
5. Damp or Wet Locations: ERMC IMC or Corrosion-resistant EMT.
6. Connection to Vibrating Equipment (Including Transformers and Hydraulic, Pneumatic, Electric Solenoid, or Motor-Driven Equipment): LFMC.

D. Raceway Fittings: Select fittings in accordance with NEMA FB 2.10 guidelines.

1. ERMC and IMC: Provide threaded type fittings unless otherwise indicated.

3.2 SELECTION OF BOXES AND ENCLOSURES

A. Unless more stringent requirements are specified in Contract Documents or manufacturers' written instructions, comply with NFPA 70 for selection of boxes and enclosures. Consult Architect for resolution of conflicting requirements.

B. Degree of Protection:

1. Outdoors:

   a. Type 3R unless otherwise indicated.
   b. Locations Exposed to Hosedown: Type 6P.
   c. Locations Subject to Potential Flooding: Type 6P.

2. Indoors:

   a. Type 1 unless otherwise indicated.
   b. Damp or Dusty Locations: Type 2.
   c. Locations Exposed to Hosedown: Type 6P.

C. Exposed Boxes Installed Less Than 2.5 m (8 ft) Above Floor:

1. Provide cast-metal boxes. Boxes with knockouts or unprotected openings are prohibited.
2. Provide exposed cover. Flat covers with angled mounting slots or knockouts are prohibited.

3.3 INSTALLATION OF RACEWAYS

A. Installation Standards:

1. Unless more stringent requirements are specified in Contract Documents or manufacturers' written instructions, comply with NFPA 70 for installation of raceways. Consult Architect for resolution of conflicting requirements.
2. Comply with NFPA 70 limitations for types of raceways allowed in specific occupancies and number of floors.
3. Comply with requirements in Section 260529 "Hangers and Supports for Electrical Systems" for hangers and supports.
4. Comply with NECA NEIS 101 for installation of steel raceways.
5. Install raceways square to the enclosure and terminate at enclosures without hubs with locknuts on both sides of enclosure wall. Install locknuts hand tight, plus one-quarter turn more.
6. Terminate threaded conduits into threaded hubs or with locknuts on inside and outside of boxes or cabinets. Install bushings on conduits up to metric designator 35 (trade size 1-1/4) and insulated throat metal bushings on metric designator 41 (trade size 1-1/2) and larger conduits terminated with locknuts. Install insulated throat metal grounding bushings on service conduits.
7. Raceway Terminations at Locations Subject to Moisture or Vibration:

   a. Provide insulating bushings to protect conductors, including conductors smaller than No. 4 AWG. Install insulated throat metal grounding bushings on service conduits.

B. General Requirements for Installation of Raceways:

1. Complete raceway installation before starting conductor installation.
2. Provide stub-ups through floors with coupling threaded inside for plugs, set flush with finished floor. Plug coupling until conduit is extended above floor to final destination or a minimum of 2 ft (0.6 m) above finished floor.
3. Install no more than equivalent of three 90-degree bends in conduit run. Support within 12 inch (300 mm) of changes in direction.

4. Make bends in raceway using large-radius preformed ells except for parallel bends. Field bending must be in accordance with NFPA 70 minimum radii requirements. Provide only equipment specifically designed for material and size involved.
5. Conceal conduit within finished walls and ceilings unless otherwise indicated. Install conduits parallel or perpendicular to building lines.
6. Support conduit within 12 inch (300 mm) of enclosures to which attached.
7. Install raceway sealing fittings at accessible locations in accordance with NFPA 70 and fill them with listed sealing compound. For concealed raceways, install fitting in flush steel box with blank cover plate having finish similar to that of adjacent plates or surfaces. Install raceway sealing fittings in accordance with NFPA 70.
8. Install devices to seal raceway interiors at accessible locations. Locate seals so no fittings or boxes are between the seal and the following changes of environments. Seal interior of raceways at the following points:

    a. Where conduits pass from warm to cold locations, such as boundaries of refrigerated spaces.
    b. Conduit extending from interior to exterior of building.
    c. Conduit extending into pressurized duct and equipment.
    d. Conduit extending into pressurized zones that are automatically controlled to maintain different pressure set points.
    e. Where otherwise required by NFPA 70.

9. Do not install conduits within 2 inch (50 mm) of the bottom side of a metal deck roof.
10. Keep raceways at least 6 inch (150 mm) away from parallel runs of flues and steam or hot-water pipes. Install horizontal raceway runs above water and steam piping.
11. Cut conduit perpendicular to the length. For conduits metric designator 53 (trade size 2) and larger, use roll cutter or a guide to make cut straight and perpendicular to the length. Ream inside of conduit to remove burrs.
12. Install pull wires in empty raceways. Provide polypropylene or monofilament plastic line with not less than 200 lb (90 kg) tensile strength. Leave at least 12 inch (300 mm) of slack at both ends of pull wire. Cap underground raceways designated as spare above grade alongside raceways in use.

C. Requirements for Installation of Specific Raceway Types:

1. Type ERMC:

    a. Threaded Conduit Joints, Exposed to Wet, Damp, Corrosive, or Outdoor Conditions: Apply listed compound that maintains electrical conductivity to threads of raceway and fittings before making up joints. Follow compound manufacturer's written instructions.

2. Types FMC and LFMC:

    a. Comply with NEMA RV 3. Provide a maximum of 36 inch (915 mm) of flexible conduit forequipment subject to vibration, noise transmission, or movement; and for transformers and motors.

D. Stub-ups to Above Recessed Ceilings:

1. Provide EMT or ERMC for raceways.
2. Provide a conduit bushing or insulated fitting to terminate stub-ups not terminated in hubs or in an enclosure.

E. Raceway Fittings: Install fittings in accordance with NEMA FB 2.10 guidelines.

1. EMT: Provide setscrew or compression, steel fittings. Comply with NEMA FB 2.10.
2. Flexible Conduit: Provide only fittings listed for use with flexible conduit type. Comply with NEMA FB 2.20.

F. Expansion-Joint Fittings:

1. Install in runs of aboveground ERMC and EMT conduit that are located where environmental temperature change may exceed 100 deg F (55 deg C) and that have straight-run length that exceeds 100 ft (30 m).
2. Install type and quantity of fittings that accommodate temperature change listed for the following locations:

   a. Outdoor Locations Not Exposed to Direct Sunlight: 125 deg F (70 deg C) temperature change.
   b. Outdoor Locations Exposed to Direct Sunlight: 155 deg F (86 deg C) temperature change.
   c. Indoor Spaces Connected with Outdoors without Physical Separation: 125 deg F (70 deg C) temperature change.
   d. Attics: 135 deg F (75 deg C) temperature change.

3. Install fitting(s) that provide expansion and contraction for at least 0.00041 inch per foot of length of straight run per deg F (0.06 mm per meter of length of straight run per deg C) of temperature change for PVC conduits. Install fitting(s) that provide expansion and contraction for at least 0.000078 inch per foot of length of straight run per deg F (0.0115 mm per meter of length of straight run per deg C) of temperature change for metal conduits.
4. Install expansion fittings at locations where conduits cross building or structure expansion joints.
5. Install expansion-joint fitting with position, mounting, and piston setting selected in accordance with manufacturer's written instructions for conditions at specific location at time of installation. Install conduit supports to allow for expansion movement.

3.4 INSTALLATION OF BOXES AND ENCLOSURES

A. Provide boxes in wiring and raceway systems wherever required for pulling of wires, making connections, and mounting of devices or fixtures.

B. Mount boxes at heights indicated on Drawings. If mounting heights of boxes are not individually indicated, give priority to ADA requirements. Install boxes with height measured to bottom of box unless otherwise indicated.

C. Recessed Boxes in Masonry Walls: Saw-cut opening for box in center of cell of masonry block, and install box flush with surface of wall. Prepare block surfaces to provide a flat surface for a raintight connection between box and cover plate or supported equipment and box, whether installed indoors or outdoors.

D. Horizontally separate boxes mounted on opposite sides of walls so they are not in the same vertical channel.

E. Locate boxes so that cover or plate will not span different building finishes.

F. Support boxes in recessed ceilings independent of ceiling tiles and ceiling grid.

G. Support boxes of three gangs or more from more than one side by spanning two framing members or mounting on brackets specifically designed for purpose.

H. Fasten junction and pull boxes to, or support from, building structure. Do not support boxes by conduits.

I. Do not rely on locknuts to penetrate nonconductive coatings on enclosures. Remove coatings in the locknut area prior to assembling conduit to enclosure to ensure a continuous ground path.

3.5 FIRESTOPPING

A. Install firestopping at penetrations of fire-rated floor and wall assemblies. Comply with requirements in Section 078413 "Penetration Firestopping."

3.6 PROTECTION

A. Protect coatings, finishes, and cabinets from damage and deterioration.

1. Repair damage to galvanized finishes with zinc-rich paint recommended by manufacturer.

3.7 CLEANING

A. Boxes: Remove construction dust and debris from device boxes, outlet boxes, and floor-mounted enclosures before installing wallplates, covers, and hoods.

END OF SECTION 260533

SECTION 260544 - SLEEVES AND SLEEVE SEALS FOR ELECTRICAL RACEWAYS AND CABLING

PART 1 - GENERAL

1.1 SUMMARY

A. Section Includes:

1. Round sleeves.
2. Rectangular sleeves.
3. Sleeve seal systems.
4. Grout.
5. Pourable sealants.
6. Foam sealants.

B. Related Requirements:

1. Section 078413 "Penetration Firestopping" for penetration firestopping installed in fire-resistance-rated walls, horizontal assemblies, and smoke barriers, with and without penetrating items.

1.2 ACTION SUBMITTALS

A. Product Data: For each type of product.

PART 2 - PRODUCTS

2.1 ROUND SLEEVES

A. Wall Sleeves, Steel:

1. Description: ASTM A53/A53M, Type E, Grade B, Schedule 40, zinc coated, plain ends and integral waterstop.

B. Wall Sleeves, Cast Iron:

1. Description: Cast or fabricated "wall pipe," equivalent to ductile-iron pressure pipe, with plain ends and integral waterstop.

C. Sheet Metal Sleeves, Galvanized Steel, Round:

1. Description: Galvanized-steel sheet; thickness not less than 0.0239 inch (0.6 mm); round tube closed with welded longitudinal joint, with tabs for screw-fastening the sleeve to the board.

2.2 RECTANGULAR SLEEVES

A. Sheet Metal Sleeves, Galvanized Steel, Rectangular:

1. Description:

    a. Material: Galvanized sheet steel.
    b. Minimum Metal Thickness:

        1) For sleeve cross-section rectangle perimeter less than 50 inch (1270 mm) and with no side larger than 16 inch (400 mm), thickness must be 0.052 inch (1.3 mm).
        2) For sleeve cross-section rectangle perimeter not less than 50 inch (1270 mm) or with one or more sides larger than 16 inch (400 mm), thickness must be 0.138 inch (3.5 mm).

2.3 SLEEVE SEAL SYSTEMS

A. Description: Modular sealing device, designed for field assembly, to fill annular space between sleeve and raceway or cable or between raceway and cable.

1. Sealing Elements: EPDM rubber interlocking links shaped to fit surface of pipe. Include type and number required for pipe material and size of pipe.
2. Pressure Plates: Carbon steel.
3. Connecting Bolts and Nuts: Carbon steel, with corrosion-resistant coating, of length required to secure pressure plates to sealing elements.

2.4 GROUT

A. Description: Nonshrink; recommended for interior and exterior sealing openings in non-fire-rated walls or floors.

1. Standard: ASTM C1107/C1107M, Grade B, post-hardening and volume-adjusting, dry, hydraulic-cement grout.
2. Design Mix: 5000 psi (34.5 MPa), 28-day compressive strength.
3. Packaging: Premixed and factory packaged.

2.5 POURABLE SEALANTS

A. Description: Single-component, neutral-curing elastomeric sealants of grade indicated below.

1. Grade: Pourable (self-leveling) formulation for openings in floors and other horizontal surfaces that are not fire rated.

2.6 FOAM SEALANTS

A. Description: Multicomponent, liquid elastomers that, when mixed, expand and cure in place to produce a flexible, nonshrinking foam. Foam expansion must not damage cables or crack penetrated structure.

PART 3 - EXECUTION

3.1 INSTALLATION OF SLEEVES FOR NON-FIRE-RATED ELECTRICAL PENETRATIONS

A. Sleeves for Conduits Penetrating Above-Grade, Non-Fire-Rated, Concrete and Masonry-Unit Floors and Walls:

1. Interior Penetrations of Non-Fire-Rated Walls and Floors:

a. Seal space outside of sleeves with mortar or grout. Pack sealing material solidly between sleeve and wall or floor so no voids remain. Tool exposed surfaces smooth; protect material while curing.
b. Seal annular space between sleeve and raceway or cable, using joint sealant appropriate for size, depth, and location of joint. Comply with requirements in Section 079200 "Joint Sealants."

2. Use pipe sleeves unless penetration arrangement requires rectangular sleeved opening.
3. Size pipe sleeves to provide 1/4 inch (6.4 mm) annular clear space between sleeve and raceway or cable, unless sleeve seal system is to be installed.
4. Install sleeves for wall penetrations unless core-drilled holes or formed openings are used. Install sleeves during erection of walls. Cut sleeves to length for mounting flush with both surfaces of walls. Deburr after cutting.

B. Sleeves for Conduits Penetrating Non-Fire-Rated Wall Assemblies:

1. Use circular metal sleeves unless penetration arrangement requires rectangular sleeved opening.
2. Seal space outside of sleeves with approved joint compound for wall assemblies.

C. Roof-Penetration Sleeves: Seal penetration of individual raceways and cables with flexible boot-type flashing units applied in coordination with roofing work.

D. Aboveground, Exterior-Wall Penetrations: Seal penetrations using steel pipe sleeves and mechanical sleeve seal systems. Size sleeves to allow for 1 inch (25 mm) annular clear space between pipe and sleeve for installing mechanical sleeve seals.

3.2 INSTALLATION OF RECTANGULAR SLEEVES AND SLEEVE SEALS

A. Install sleeves in existing walls without compromising structural integrity of walls. Do not cut structural elements without reinforcing the wall to maintain the designed weight bearing and wall stiffness.

B. Install conduits and cable with no crossings within the sleeve.

C. Fill opening around conduits and cables with expanding foam without leaving voids.

D. Provide metal sheet covering at both wall surfaces and finish to match surrounding surfaces. Metal sheet must be same material as sleeve.

3.3 INSTALLATION OF SLEEVE SEAL SYSTEMS

A. Install sleeve seal systems in sleeves in exterior concrete walls and slabs-on-grade at raceway entries into building.

B. Install type and number of sealing elements recommended by manufacturer for raceway or cable material and size. Position raceway or cable in center of sleeve. Assemble mechanical sleeve seals and install in annular space between raceway or cable and sleeve. Tighten bolts against pressure plates that cause sealing elements to expand and make watertight seal.

END OF SECTION 260544

SECTION 260548.16 - SEISMIC CONTROLS FOR ELECTRICAL SYSTEMS

PART 1 - GENERAL

1.1 SUMMARY

A. Section Includes:

1. Restraints - rigid type.
2. Restraints - cable type.
3. Restraint accessories.
4. Post-installed concrete anchors.
5. Concrete inserts.

B. Related Requirements:

1. Section 260529 "Hangers and Supports for Electrical Systems" for commonly used electrical supports and installation requirements.

1.2 COORDINATION

A. Tests and Inspections:

1. Schedule test with Owner, through Architect, before connecting anchorage device to restrained component (unless postconnection testing has been approved), and provide notice at least seven days in advance.
2. Obtain Architect's approval before transmitting test loads to structure. Provide temporary load-spreading members.

1.3 ACTION SUBMITTALS

A. Product Data: For each type of product.

1. Include rated load capacity for each seismic-restraint device.
2. Illustrate and indicate style, material, strength, fastening provision, and finish for each type and size of seismic-restraint component used.
3. Annotate types and sizes of seismic restraints and accessories, complete with listing markings or report numbers and load rating in tension and compression as evaluated by an agency acceptable to authorities having jurisdiction.
4. Annotate to indicate application of each product submitted and compliance with requirements.

1.4 INFORMATIONAL SUBMITTALS

A. Coordination Drawings: Show coordination of seismic bracing for components with other systems and equipment in the vicinity, including other supports and seismic restraints.

B. Welding certificates.

C. Field quality-control reports.

PART 2 - PRODUCTS

2.1 PERFORMANCE REQUIREMENTS

A. Seismic-Restraint Device Load Ratings: Devices to be tested and rated in accordance with applicable code requirements and authorities having jurisdiction. Devices to be listed by a nationally recognized third party that requires periodic follow-up inspections and has a listing directory available to the public. Provide third-party listing by one or more of the following: an agency acceptable to authorities having jurisdiction.

B. Consequential Damage: Provide additional seismic restraints for suspended components or anchorage of floor-, roof-, or wall-mounted components so that failure of a non-essential or essential component does not cause failure of any other essential building component.

C. Fire/Smoke Resistance: Seismic-restraint devices that are not constructed of ferrous metals must have a maximum flame-spread index of 25 and maximum smoke-developed index of 50 when tested and labeled by an NRTL in accordance with ASTM E84 or UL 723.

D. Component Supports:

1. Load ratings, features, and applications of all reinforcement components must be based on testing standards of an NRTL.

2.2 RESTRAINTS - RIGID TYPE

A. Description: Shop- or field-fabricated bracing assembly made of ANSI/AISI S110-07-S1 slotted steel channels, ANSI/ASTM A53/A53M steel pipe, or other rigid steel brace member. Includes accessories for attachment to braced component at one end and to building structure at the other end and other matching components and with corrosion-resistant coating; rated in tension, compression, and torsion forces.

2.3 RESTRAINTS - CABLE TYPE

A. Seismic-Restraint Cables: ASTM A1023/A1023M galvanized or ASTM A603 galvanized-steel cables. End connections made of steel assemblies with thimbles, brackets, swivel, and bolts designed for seismic-restraining cable service; with fittings attached by means of poured socket, swaged socket or mechanical (Flemish eye) loop.

B. Restraint cable assembly and cable fittings must comply with ASCE/SEI 19. Cable fittings and complete cable assembly must maintain the minimum cable breaking force. U-shaped cable clips and wedge-type end fittings do not comply and are unacceptable.

2.4 RESTRAINT ACCESSORIES

A. Hanger-Rod Stiffener: Steel tube or steel slotted-support-system sleeve with internally bolted connections or Reinforcing steel angle clamped to hanger rod. Non-metallic stiffeners are unacceptable.

B. Hinged and Swivel Brace Attachments: Multifunctional steel connectors for attaching hangers to rigid channel bracings and restraint cables.

C. Bushing Assemblies for Wall-Mounted Equipment Anchorage: Assemblies of neoprene elements and steel sleeves designed for rigid equipment mountings, and matched to type and size of attachment devices used.

D. Resilient Isolation Washers and Bushings: One-piece, molded, oil- and water-resistant neoprene, with a flat washer face.

2.5 POST-INSTALLED CONCRETE ANCHORS

A. Mechanical Anchor Bolts:

1. Drilled-in and stud-wedge or female-wedge type in zinc-coated steel for interior applications and stainless steel for exterior applications. Select anchor bolts with strength for anchor and as tested according to ASTM E488/E488M.

B. Adhesive Anchor Bolts:

1. Drilled-in and capsule anchor system containing PVC or urethane methacrylate-based resin and accelerator, or injected polymer or hybrid mortar adhesive. Provide anchor bolts and hardware with zinc-coated steel for interior applications and stainless steel for exterior applications. Select anchor bolts with strength required for anchor and as tested according to ASTM E488/E488M.

C. Provide post-installed concrete anchors that have been prequalified for use in seismic and wind-load applications.

1. Prequalify post-installed anchors in concrete in accordance with ACI 355.2 or other approved qualification testing procedures.
2. Prequalify post-installed anchors in masonry in accordance with approved qualification procedures.

D. Expansion-type anchor bolts are not permitted for equipment in excess of 10 hp (7.46 kW) that is not vibration isolated.

1. Undercut expansion anchors are permitted.

2.6 CONCRETE INSERTS

A. Provide preset concrete inserts that are seismically prequalified in accordance with ICC-ES AC446 testing.

B. Comply with MSS SP-58.

PART 3 - EXECUTION

3.1 EXAMINATION

A. Examine areas and equipment to receive seismic control devices for compliance with requirements for installation tolerances and other conditions affecting performance of the Work.

B. Examine roughing-in for reinforcement and cast-in-place anchors to verify actual locations before installation.

C. Proceed with installation only after unsatisfactory conditions have been corrected.

3.2 APPLICATIONS

A. Multiple Raceways or Cables: Secure raceways and cables to trapeze member with clamps approved for application by an agency acceptable to authorities having jurisdiction.

B. Hanger-Rod Stiffeners: Install where indicated or scheduled on Drawings to receive them and where required to prevent buckling of hanger rods caused by seismic forces.

C. Strength of Support and Seismic-Restraint Assemblies: Where not indicated, select sizes of components so strength will be adequate to carry static and seismic loads within specified loading limits.

3.3 INSTALLATION OF SEISMIC-RESTRAINT DEVICES

A. Provide seismic-restraint devices for systems and equipment where the Specifications indicate they are to be installed on specific equipment and systems, and where required by applicable codes.

1. Install equipment and devices to withstand the effects of earthquake motions.

B. Coordinate location of embedded connection hardware with supported equipment attachment and mounting points and with requirements for concrete reinforcement and formwork specified in Section 033000 "Cast-in-Place Concrete."

C. Installation of seismic restraints must not cause any stresses, misalignment, or change of position of equipment or conduits.

D. Equipment Restraints:

1. Install resilient bolt isolation washers on equipment anchor bolts where clearance between anchor and adjacent surface exceeds 0.125 inch (3.2 mm).
2. Install seismic-restraint devices using methods approved by an agency acceptable to authorities having jurisdiction that provides required submittals for component.

E. Raceway and Wireway Support and Hanger Restraints:

1. Install resilient bolt isolation washers on equipment anchor bolts where clearance between anchor and adjacent surface exceeds 0.125 inch (3.2 mm).
2. Install seismic-restraint devices using methods approved by an agency acceptable to authorities having jurisdiction that provides required submittals for component.

F. Equipment and Hanger Restraints:

1. Install resilient, bolt-isolation washers on equipment anchor bolts where clearance between anchor and adjacent surface exceeds 0.125 inch (3.2 mm).
2. Install seismic-restraint devices using methods approved by an agency acceptable to authorities having jurisdiction providing required submittals for component.

G. Install cables so they do not bend across edges of adjacent equipment or building structure.

H. Install bushing assemblies for mounting bolts for wall-mounted equipment, arranged to provide resilient media where equipment or equipment-mounting channels are attached to wall.

I. Attachment to Structure: If specific attachment is not indicated, anchor bracing to structure at flanges of beams, at upper truss chords of bar joists, or at concrete members.

J. Post-Installed Concrete Anchors:

1. Identify position of reinforcing steel and other embedded items prior to drilling holes for anchors. Do not damage existing reinforcing or embedded items during coring or drilling. Notify structural engineer if reinforcing steel or other embedded items are encountered during drilling. Locate and avoid prestressed tendons, electrical and telecommunications conduit, and gas lines.
2. Do not drill holes in concrete or masonry until concrete, mortar, or grout has achieved full design strength.
3. Mechanical-Type Anchor Bolts: Protect threads from damage during anchor installation. Heavy-duty sleeve anchors must be installed with sleeve fully engaged in the structural element to which anchor is to be fastened.
4. Adhesive-Type Anchor Bolts: Clean holes to remove loose material and drilling dust prior to installation of adhesive. Place adhesive in holes proceeding from the bottom of the hole and progressing toward the surface in such a manner as to avoid introduction of air pockets in the adhesive.
5. Set anchors to manufacturer's recommended torque using a torque wrench.
6. Install zinc-coated steel anchors for interior and stainless steel anchors for exterior applications.

3.4 ACCOMMODATION OF DIFFERENTIAL SEISMIC MOTION

A. Install flexible connections in runs of raceways, cables, wireways, cable trays, and busways where they cross seismic joints, where adjacent sections or branches are supported by different structural elements, and where connection is terminated to equipment that is anchored to a different structural element from the one supporting them as they approach equipment.

3.5 FIELD QUALITY CONTROL

A. Tests and Inspections:

1. Provide evidence of recent calibration of test equipment by a testing agency acceptable to authorities having jurisdiction.
2. Test no fewer than four of each type and size of installed anchors and fasteners.
3. Test to 90 percent of rated proof load of device.

B. Seismic controls will be considered defective if they do not pass tests and inspections.

C. Prepare test and inspection reports.

END OF SECTION 260548.16

SECTION 260553 - IDENTIFICATION FOR ELECTRICAL SYSTEMS

PART 1 - GENERAL

1.1 SUMMARY

A. Section Includes:

1. Labels.
2. Tapes and stencils.
3. Signs.
4. Miscellaneous identification products.

1.2 ACTION SUBMITTALS

A. Product Data:

1. Include construction details, material descriptions, dimensions of individual components and profiles, and finishes for electrical identification products.

PART 2 - PRODUCTS

2.1 PERFORMANCE REQUIREMENTS

A. Comply with ASME A13.1.

B. Comply with 29 CFR 1910.144 for color identification of hazards; 29 CFR 1910.145 for danger, caution, warning, and safety instruction signs and tags; and the following:

1. Ceiling-mounted hangers, supports and raceways must be finished, painted, or suitably marked safety yellow where less than 7.7 ft (2.3 m) above finished floor.

C. Signs, labels, and tags required for personnel safety must comply with the following standards:

1. Safety Colors: NEMA Z535.1.
2. Facility Safety Signs: NEMA Z535.2.
3. Safety Symbols: NEMA Z535.3.
4. Product Safety Signs and Labels: NEMA Z535.4.
5. Safety Tags and Barricade Tapes for Temporary Hazards: NEMA Z535.5.

D. Comply with NFPA 70E requirements for arc-flash warning labels.

E. Adhesive-attached labeling materials, including label stocks, laminating adhesives, and inks used by label printers, must comply with UL 969.

F. Thermal Movements: Allow for thermal movements from ambient and surface temperature changes.

1. Temperature Change: 120 deg F (67 deg C), ambient; 180 deg F (100 deg C), material surfaces.

2.2 COLOR AND LEGEND REQUIREMENTS

A. Color-Coding for Phase- and Voltage-Level Identification, 1000 V or Less: Use colors listed below for ungrounded service feeder and branch-circuit conductors.

1. Color must be factory applied or field applied for sizes larger than 8 AWG if authorities having jurisdiction permit.

2. Colors for 240 V Circuits:

a. Phase A: Black.
b. Phase B: Red.

3. Color for Neutral: White.
4. Color for Equipment Grounds: Green.

B. Warning Label Colors:

1. Identify system voltage with black letters on orange background.

C. Warning labels and signs must include, but are not limited to, the following legends:

1. Multiple Power Source Warning: "DANGER - ELECTRICAL SHOCK HAZARD - EQUIPMENT HAS MULTIPLE POWER SOURCES."
2. Workspace Clearance Warning: "WARNING - OSHA REGULATION - AREA IN FRONT OF ELECTRICAL EQUIPMENT MUST BE KEPT CLEAR FOR 3 FEET MINIMUM."

D. Equipment Identification Labels:

1. Black letters on white field.

2.3 LABELS

A. Self-Adhesive Wraparound Labels: Preprinted, 3 mil (0.08 mm) thick, polyester or vinyl flexible label with acrylic pressure-sensitive adhesive.

1. Self-Lamination: Clear; UV-, weather- and chemical-resistant; self-laminating, protective shield over legend. Labels sized such that clear shield overlaps entire printed legend.
2. Marker for Labels:

a. Permanent, waterproof, black ink marker recommended by tag manufacturer.
b. Machine-printed, permanent, waterproof, black ink recommended by printer manufacturer.

B. Self-Adhesive Labels: Polyester or Vinyl, thermal, transfer-printed, 3 mil (0.08 mm) thick, multicolor, weather- and UV-resistant, pressure-sensitive adhesive labels, configured for intended use and location.

1. Minimum Nominal Size:

a. 1-1/2 by 6 inch (37 by 150 mm) for raceway and conductors.
b. 3-1/2 by 5 inch (76 by 127 mm) for equipment.
c. As required by authorities having jurisdiction.

2.4 TAPES AND STENCILS

A. Marker Tapes: Vinyl or vinyl-cloth, self-adhesive wraparound type, with circuit identification legend machine printed by thermal transfer or equivalent process.

B. Self-Adhesive Vinyl Tape: Colored, heavy duty, waterproof, fade resistant; not less than 3 mil (0.08 mm) thick by 1 to 2 inch (25 to 50 mm) wide; compounded for outdoor use.

2.5 SIGNS

A. Laminated Acrylic or Melamine Plastic Signs:

1. Engraved legend.
2. Thickness:

a. For signs up to 20 sq. inch (129 sq. cm), minimum 1/16 inch (1.6 mm) thick.
b. For signs larger than 20 sq. inch (129 sq. cm), 1/8 inch (3.2 mm) thick.
c. Engraved legend with black letters on white face.
d. Self-adhesive.
e. Framed with mitered acrylic molding and arranged for attachment at applicable equipment.

PART 3 - EXECUTION

3.1 PREPARATION

A. Self-Adhesive Identification Products: Before applying electrical identification products, clean substrates of substances that could impair bond, using materials and methods recommended by manufacturer of identification product.

3.2 INSTALLATION

A. Verify and coordinate identification names, abbreviations, colors, and other features with requirements in other Sections requiring identification applications, Drawings, Shop Drawings, manufacturer's wiring diagrams, and operation and maintenance manual. Use consistent designations throughout Project.

B. Install identifying devices before installing acoustical ceilings and similar concealment.

C. Verify identity of item before installing identification products.

D. Coordinate identification with Project Drawings, manufacturer's wiring diagrams, and operation and maintenance manual.

E. Apply identification devices to surfaces that require finish after completing finish work.

F. Install signs with approved legend to facilitate proper identification, operation, and maintenance of electrical systems and connected items.

G. System Identification for Raceways and Cables under 1000 V: Identification must completely encircle cable or conduit. Place identification of two-color markings in contact, side by side.

1. Secure tight to surface of conductor, cable, or raceway.

H. System Identification for Raceways and Cables over 1000 V: Identification must completely encircle cable or conduit. Place adjacent identification of two-color markings in contact, side by side.

1. Secure tight to surface of conductor, cable, or raceway.

I. Auxiliary Electrical Systems Conductor Identification: Identify field-installed alarm, control, and signal connections.

J. Elevated Components: Increase sizes of labels, signs, and letters to those appropriate for viewing from floor.

K. Accessible Fittings for Raceways: Identify cover of junction and pull box of the following systems with wiring system legend and system voltage. System legends must be as follows:

1. "POWER."

L. Vinyl Wraparound Labels:

1. Secure tight to surface of raceway or cable at location with high visibility and accessibility.
2. Attach labels that are not self-adhesive type with clear vinyl tape, with adhesive appropriate to location and substrate.

M. Snap-Around Labels: Secure tight to surface at location with high visibility and accessibility.

N. Self-Adhesive Wraparound Labels: Secure tight to surface at location with high visibility and accessibility.

O. Self-Adhesive Labels:

1. Install unique designation label that is consistent with wiring diagrams, schedules, and operation and maintenance manual.
2. Unless otherwise indicated, provide single line of text with 1/2 inch (13 mm) high letters on 1-1/2 inch (38 mm) high label; where two lines of text are required, use labels 2 inch (50 mm) high.

P. Snap-Around Color-Coding Bands: Secure tight to surface at location with high visibility and accessibility.

Q. Heat-Shrink, Preprinted Tubes: Secure tight to surface at location with high visibility and accessibility.

R. Marker Tapes: Secure tight to surface at location with high visibility and accessibility.

S. Self-Adhesive Vinyl Tape: Secure tight to surface at location with high visibility and accessibility.

1. Field-Applied, Color-Coding Conductor Tape: Apply in half-lapped turns for minimum distance of 6 inch (150 mm) where splices or taps are made. Apply last two turns of tape with no tension to prevent possible unwinding.

T. Laminated Acrylic or Melamine Plastic Signs:

1. Attach signs that are not self-adhesive type with mechanical fasteners appropriate to location and substrate.
2. Unless otherwise indicated, provide single line of text with 1/2 inch (13 mm) high letters on 1-1/2 inch (38 mm) high sign; where two lines of text are required, use labels 2 inch (50 mm) high.

3.3 IDENTIFICATION SCHEDULE

A. Install identification materials and devices at locations for most convenient viewing without interference with operation and maintenance of equipment. Install access doors or panels to provide view of identifying devices.

B. Identify conductors, cables, and terminals in enclosures and at junctions, terminals, pull points, and locations of high visibility. Identify by system and circuit designation.

C. Accessible Raceways and Metal-Clad Cables, 1000 V or Less, for Service, Feeder, and Branch Circuits, More Than 30 A and 120 V to Ground: Identify with self-adhesive vinyl tape applied in bands.

1. Locate identification at changes in direction, at penetrations of walls and floors, at 50 ft (15 m) maximum intervals in straight runs, and at 25 ft (7.6 m) maximum intervals in congested areas.

D. Accessible Fittings for Raceways and Cables within Buildings: Identify cover of junction and pull box of the following systems with self-adhesive labels containing wiring system legend and system voltage. System legends must be as follows:

1. "POWER."

E. Power-Circuit Conductor Identification, 1000 V or Less: For conductors in vaults, pull and junction boxes, manholes, and handholes, use self-adhesive wraparound labels to identify phase.

1. Locate identification at changes in direction, at penetrations of walls and floors, at 50 ft (15 m) maximum intervals in straight runs, and at 25 ft (7.6 m) maximum intervals in congested areas.

F. Control-Circuit Conductor Identification: For conductors and cables in pull and junction boxes, manholes, and handholes, use self-adhesive labels with conductor or cable designation, origin, and destination.

G. Control-Circuit Conductor Termination Identification: For identification at terminations, provide self-adhesive labels with conductor designation.

H. Instructional Signs: Self-adhesive labels, including color code for grounded and ungrounded conductors.

I. Warning Labels for Indoor Cabinets, Boxes, and Enclosures for Power and Lighting: Self-adhesive labels.

1. Apply to exterior of door, cover, or other access.
2. For equipment with multiple power or control sources, apply to door or cover of equipment, including, but not limited to, the following:

    a. Controls with external control power connections.

J. Arc Flash Warning Labeling: Self-adhesive labels.

K. Operating Instruction Signs: Self-adhesive labels.

L. Equipment Identification Labels:

1. Indoor Equipment: Laminated acrylic or melamine plastic sign.
2. Outdoor Equipment: Laminated acrylic or melamine sign.
3. Equipment to Be Labeled:

    a. Panelboards: Typewritten directory of circuits in location provided by panelboard manufacturer. Panelboard identification must be in form of self-adhesive, engraved, laminated acrylic or melamine label.
    b. Enclosures and electrical cabinets.
    c. Access doors and panels for concealed electrical items.
    d. Enclosed switches.
    e. Enclosed controllers.
    f. Variable-speed controllers.
    g. Push-button stations.

END OF SECTION 260553

SECTION 26 05 75 – ELECTRICAL CONNECTIONS TO EQUIPMENT

PART 1 - GENERAL

1.1 SUMMARY

A. Section Includes: Electrical connections to Owner-furnished equipment, and equipment specified under other Divisions and Sections.

B. Related Sections include:

1. Section 26 05 26 – Grounding and Bonding for Electrical Systems
2. Section 26 05 33 – Raceway and Boxes for Electrical Systems
3. Section 26 28 16 – Enclosed Switches and Circuit Breakers

1.2 REFERENCES

A. NFPA 70 - National Electrical Code

B. NEMA WD 1 - General Purpose Wiring Devices

C. NEMA WD 6 - Wiring Device Configurations

1.3 SUBMITTALS

A. Conform to Division 1 requirements.

B. Product Data: Provide wiring device manufacturer's catalog information showing dimensions, configurations, and construction.

C. Manufacturer's Instructions: Indicate application conditions and limitations of use stipulated by Product testing agency specified under Regulatory Requirements. Include instructions for storage, handling, protection, examination, preparation, installation, and starting of Product.

1.4 REGULATORY REQUIREMENTS

A. Electrical: Conform to NFPA 70.

B. Furnish products listed and classified by Underwriters Laboratories, Inc. as suitable for purpose specified and shown.

PART 2 - PRODUCTS

2.1 CORDS AND CAPS

A. Attachment Plug Construction: Conform to NEMA WD 1.

B. Configuration: NEMA WD 6; match receptacle configuration at outlet provided for equipment.

C. Cord Construction: NFPA 70; Type SJO multiconductor flexible cord with identified equipment grounding conductor, suitable for use in damp locations.

D. Size: Suitable for connected load of equipment, length of cord, and rating of branch circuit overcurrent protection.

PART 3 - EXECUTION

3.1 COORDINATION

A. Coordinate work with systems and other trades under provisions of Division 1.

B. Obtain and review shop drawings, product data, and manufacturer's instructions for Owner-Furnished equipment, and equipment furnished under other Divisions and Sections.

C. Determine connection locations and requirements prior to roughing in.

D. Sequence rough-in of electrical connections to coordinate with installation schedule for equipment.

E. Sequence electrical connections to coordinate with start-up schedule for equipment.

3.2 EXAMINATION

A. Verify that equipment is ready for electrical connection, wiring, and energization.

B. Verify that equipment supplied matches submittal data.

3.3 CONNECTIONS

A. Make electrical connections in accordance with equipment manufacturer's instructions.

B. Make conduit connections to equipment using flexible conduit. Use liquidtight flexible conduit with watertight connectors in damp or wet locations.

C. Make wiring connections using wire and cable with insulation suitable for temperatures encountered in heat producing equipment.

D. Make wiring connections using wire and cable with insulation suitable for temperatures encountered in heat producing equipment.

E. Provide suitable strain-relief clamps and fittings for cord connections at outlet boxes and equipment connection boxes.

F. Install disconnect switches, controllers, control stations, and control devices as indicated.

G. Modify equipment control wiring with terminal block jumpers as indicated.

H. Provide interconnecting conduit and wiring between devices and equipment where indicated or required.

END OF SECTION 26 05 75

SECTION 262413 - SWITCHBOARDS

PART 1 - GENERAL

1.1 RELATED DOCUMENTS

A. Drawings and general provisions of the Contract, including General and Supplementary Conditions and Division 01 Specification Sections, apply to this Section.

1.2 SUMMARY

A. Section Includes:

1. Modifications to service and distribution switchboards rated 600 V and less, up to and including replacement of an existing distribution section.
2. Disconnecting and overcurrent protective devices.
3. Accessory components and features.
4. Identification.
5. Testing.

1.3 ACTION SUBMITTALS

A. Product Data: For each switchboard, overcurrent protective device, surge protection device, ground-fault protector, accessory, and component.

1. Include dimensions and manufacturers' technical data on features, performance, electrical characteristics, ratings, accessories, and finishes.

B. Shop Drawings: For each switchboard and related equipment.

1. Include dimensioned plans, elevations, sections, and details, including required clearances and service space around equipment. Show tabulations of installed devices, equipment features, and ratings.
2. Detail enclosure types for types other than NEMA 250, Type 1.
3. Detail bus configuration, current, and voltage ratings.
4. Detail short-circuit current rating of switchboards and overcurrent protective devices.
5. Include descriptive documentation of optional barriers specified for electrical insulation and isolation.
6. Detail utility company's metering provisions with indication of approval by utility company.
7. Include evidence of NRTL listing for series rating of installed devices.
8. Detail features, characteristics, ratings, and factory settings of individual overcurrent protective devices and auxiliary components.
9. Include time-current coordination curves for each type and rating of overcurrent protective device included in switchboards. Submit on translucent log-log graft paper; include selectable ranges for each type of overcurrent protective device.
10. Include diagram and details of proposed mimic bus.
11. Include schematic and wiring diagrams for power, signal, and control wiring.

C. Samples: Representative portion of mimic bus with specified material and finish, for color selection.

1.4 INFORMATIONAL SUBMITTALS

A. Qualification Data: For Installer.

B. Seismic Qualification Data: Certificates, for switchboards, overcurrent protective devices, accessories, and components, from manufacturer.

1. Basis for Certification: Indicate whether withstand certification is based on actual test of assembled components or on calculation.
2. Dimensioned Outline Drawings of Equipment Unit: Identify center of gravity and locate and describe mounting and anchorage provisions.
3. Detailed description of equipment anchorage devices on which the certification is based and their installation requirements.

C. Field Quality-Control Reports:

1. Test procedures used.
2. Test results that comply with requirements.
3. Results of failed tests and corrective action taken to achieve test results that comply with requirements.

1.5 CLOSEOUT SUBMITTALS

A. Operation and Maintenance Data: For switchboards and components to include in emergency, operation, and maintenance manuals.

1. In addition to items specified in Section 017823 "Operation and Maintenance Data," include the following:

a. Routine maintenance requirements for switchboards and all installed components.
b. Manufacturer's written instructions for testing and adjusting overcurrent protective devices.
c. Time-current coordination curves for each type and rating of overcurrent protective device included in switchboards. Submit on translucent log-log graft paper; include selectable ranges for each type of overcurrent protective device.

1.6 QUALITY ASSURANCE

A. Installer Qualifications: An employer of workers qualified as defined in NEMA PB 2.1 and trained in electrical safety as required by NFPA 70E.

B. Testing Agency Qualifications: Accredited by NETA.

1. Testing Agency's Field Supervisor: Certified by NETA to supervise on-site testing.

1.7 DELIVERY, STORAGE, AND HANDLING

A. Deliver switchboards in sections or lengths that can be moved past obstructions in delivery path.

B. Remove loose packing and flammable materials from inside switchboards and connect factory-installed space heaters to temporary electrical service to prevent condensation.

C. Handle and prepare switchboards for installation according to NEMA PB 2.1.

1.8 FIELD CONDITIONS

A. Installation Pathway: Remove and replace access fencing, doors, lift-out panels, and structures to provide pathway for moving switchboards into place.

B. Environmental Limitations:

1. Do not deliver or install switchboards until spaces are enclosed and weathertight, wet work in spaces is complete and dry, work above switchboards is complete, and temporary HVAC system is operating and maintaining ambient temperature and humidity conditions at occupancy levels during the remainder of the construction period.
2. Rate equipment for continuous operation under the following conditions unless otherwise indicated:

   a. Ambient Temperature: Not exceeding 104 deg F (40 deg C).
   b. Altitude: Not exceeding 6600 feet (2000 m).

C. Interruption of Existing Electric Service: Do not interrupt electric service to facilities occupied by Owner or others unless permitted under the following conditions and then only after arranging to provide temporary electric service according to requirements indicated:

1. Notify Construction Manager no fewer than seven days in advance of proposed interruption of electric service.
2. Indicate method of providing temporary electric service.
3. Do not proceed with interruption of electric service without Construction Manager's written permission.
4. Comply with NFPA 70E.

1.9 COORDINATION

A. Coordinate layout and installation of switchboards and components with other construction that penetrates walls or is supported by them, including electrical and other types of equipment, raceways, piping, encumbrances to workspace clearance requirements, and adjacent surfaces. Maintain required workspace clearances and required clearances for equipment access doors and panels.

B. Coordinate sizes and locations of concrete bases with actual equipment provided. Cast anchor-bolt inserts into bases. Concrete, reinforcement, and formwork requirements are specified with concrete.

1.10 WARRANTY

A. Manufacturer's Warranty: Manufacturer agrees to repair or replace switchboard enclosures, buswork, overcurrent protective devices, accessories, and factory installed interconnection wiring that fail in materials or workmanship within specified warranty period.

1. Warranty Period: Three years from date of Substantial Completion.

B. Manufacturer's Warranty: Manufacturer's agrees to repair or replace surge protection devices that fail in materials or workmanship within specified warranty period.

1. Warranty Period: Five years from date of Substantial Completion.

PART 2 - PRODUCTS

2.1 PERFORMANCE REQUIREMENTS

A. Seismic Performance: Switchboards shall withstand the effects of earthquake motions determined according to ASCE/SEI 7.

1. Basis for Certification: Indicate whether withstand certification is based on actual test of assembled components or on calculation. Shake-table testing shall comply with ICC-ES AC156.
2. The term "withstand" means "the unit will remain in place without separation of any parts from the device when subjected to the seismic forces specified."

2.2 SWITCHBOARDS

A. Manufacturer: Existing, Eaton/Cutler Hammer.

B. Source Limitations: Obtain switchboards, overcurrent protective devices, components, and accessories from single source from single manufacturer.

C. Electrical Components, Devices, and Accessories: Listed and labeled as defined in NFPA 70, by a qualified testing agency, and marked for intended location and application.

D. Comply with NEMA PB 2.

E. Comply with NFPA 70.

F. Comply with UL 891.

G. Front-Connected, Front-Accessible Switchboards:

1. Branch Devices: Panel mounted.
2. Sections front and rear aligned.

H. Nominal System Voltage: 208Y/120 V.

I. Main-Bus Continuous: 1600 A.

J. Seismic Requirements: Fabricate and test switchboards according to IEEE 344 to withstand seismic forces defined in Section 260548.16 "Seismic Controls for Electrical Systems."

1. Basis for Certification: Indicate whether withstand certification is based on actual test of assembled components or on calculation. Shake-table testing shall comply with ICC-ES AC156.

a. The term "withstand" means "the unit will remain in place without separation of any parts from the device when subjected to the seismic forces specified."

K. Indoor Enclosures: Steel, NEMA 250, Type 1.

L. Enclosure Finish for Indoor Units: Factory-applied finish in manufacturer's standard gray finish over a rust-inhibiting primer on treated metal surface.

M. Barriers: Between adjacent switchboard sections.

N. Space Heaters: Factory-installed electric space heaters of sufficient wattage in each vertical section to maintain enclosure temperature above expected dew point.

1. Space-Heater Control: Thermostats to maintain temperature of each section above expected dew point.
2. Space-Heater Power Source: Transformer, factory installed in switchboard.

O. Bus Transition and Incoming Pull Sections: Matched and aligned with basic switchboard.

P. Hinged Front Panels: Allow access to circuit breaker, metering, accessory, and blank compartments.

Q. Buses and Connections: Three phase, four wire unless otherwise indicated.

1. Provide phase bus arrangement A, B, C from front to back, top to bottom, and left to right when viewed from the front of the switchboard.
2. Phase- and Neutral-Bus Material: Hard-drawn copper of 98 percent conductivity,
3. Copper feeder circuit-breaker line connections.
4. Load Terminals: Insulated, rigidly braced, runback bus extensions, of same material as through buses, equipped with mechanical connectors for outgoing circuit conductors. Provide load terminals for future circuit-breaker positions at full-ampere rating of circuit-breaker position.
5. Ground Bus: Minimum-size required by UL 891, hard-drawn copper of 98 percent conductivity, equipped with mechanical connectors for feeder and branch-circuit ground conductors.
6. Main-Phase Buses and Equipment-Ground Buses: Uniform capacity for entire length of switchboard's main and distribution sections.
7. Neutral Buses: 100 percent of the ampacity of phase buses unless otherwise indicated, equipped with mechanical connectors for outgoing circuit neutral cables. Brace bus extensions for busway feeder neutral bus.

R. Future Devices: Equip compartments with mounting brackets, supports, bus connections, and appurtenances at full rating of circuit-breaker compartment.

2.3 DISCONNECTING AND OVERCURRENT PROTECTIVE DEVICES

A. Molded-Case Circuit Breaker (MCCB): Comply with UL 489, with series-connected rating to meet available fault currents.

1. Thermal-Magnetic Circuit Breakers: Inverse time-current element for low-level overloads and instantaneous magnetic trip element for short circuits. Adjustable magnetic trip setting for circuit-breaker frame sizes 250 A and larger.
2. Adjustable Instantaneous-Trip Circuit Breakers: Magnetic trip element with front-mounted, field-adjustable trip setting.
3. Electronic trip circuit breakers with rms sensing; field-replaceable rating plug or field-replicable electronic trip; and the following field-adjustable settings:

   a. Instantaneous trip.
   b. Long- and short-time pickup levels.

c. Long and short time adjustments.
d. Ground-fault pickup level, time delay, and I squared t response.

4. Current-Limiting Circuit Breakers: Frame sizes 400 A and smaller; let-through ratings less than NEMA FU 1, RK-5.
5. MCCB Features and Accessories:

a. Standard frame sizes, trip ratings, and number of poles.
b. Lugs: Mechanical style, suitable for number, size, trip ratings, and conductor material.
c. Application Listing: Appropriate for application; Type SWD for switching fluorescent lighting loads; Type HID for feeding fluorescent and high-intensity discharge (HID) lighting circuits.
d. Undervoltage Trip: Set to operate at 35 to 75 percent of rated voltage without intentional time delay.
e. Auxiliary Contacts: One SPDT switch with "a" and "b" contacts; "a" contacts mimic circuit-breaker contacts, "b" contacts operate in reverse of circuit-breaker contacts.

2.4 IDENTIFICATION

A. Service Equipment Label: NRTL labeled for use as service equipment for switchboards with one or more service disconnecting and overcurrent protective devices.

PART 3 - EXECUTION

3.1 EXAMINATION

A. Engage the manufacturer to determine the extent of work necessary to install a new 800AF circuit breaker in the existing distribution section.

1. Modify the existing busses and mounting hardware as required to install the new breaker, or
2. Replace the existing busses as required to install the new breaker, or
3. Replace the existing distribution section as required to install the new breaker.
4. Remove and reinstall existing distribution circuit breakers as required by the above.

B. Receive, inspect, handle, and store switchboards according to NEMA PB 2.1.

1. Lift or move switchboards with spreader bars and manufacturer-supplied lifting straps following manufacturer's instructions.
2. Use rollers, slings, or other manufacturer-approved methods if lifting straps are not furnished.
3. Protect from moisture, dust, dirt, and debris during storage and installation.
4. Install temporary heating during storage per manufacturer's instructions.

C. Examine switchboards before installation. Reject switchboards that are moisture damaged or physically damaged.

D. Examine elements and surfaces to receive switchboards for compliance with installation tolerances and other conditions affecting performance of the Work or that affect the performance of the equipment.

E. Proceed with installation only after unsatisfactory conditions have been corrected.

3.2 INSTALLATION

A. Install switchboards and accessories according to NEMA PB 2.1.

B. Equipment Mounting: Install switchboards on concrete base, 4-inch (100-mm) nominal thickness. Comply with requirements for concrete base specified in Section 033000 "Cast-in-Place Concrete."

1. Install conduits entering underneath the switchboard, entering under the vertical section where the conductors will terminate. Install with couplings flush with the concrete base. Extend 2 inches (50-mm) above concrete base after switchboard is anchored in place.
2. Install dowel rods to connect concrete base to concrete floor. Unless otherwise indicated, install dowel rods on 18-inch (450-mm) centers around the full perimeter of concrete base.
3. For supported equipment, install epoxy-coated anchor bolts that extend through concrete base and anchor into structural concrete floor.
4. Place and secure anchorage devices. Use setting drawings, templates, diagrams, instructions, and directions furnished with items to be embedded.
5. Install anchor bolts to elevations required for proper attachment to switchboards.
6. Anchor switchboard to building structure at the top of the switchboard if required or recommended by the manufacturer.

C. Temporary Lifting Provisions: Remove temporary lifting eyes, channels, straps and brackets, and temporary blocking of moving parts from switchboard units and components.

D. Comply with mounting and anchoring requirements specified in Section 260548.16 "Seismic Controls for Electrical Systems."

E. Operating Instructions: Frame and mount the printed basic operating instructions for switchboards, including control and key interlocking sequences and emergency procedures. Fabricate frame of finished wood or metal and cover instructions with clear acrylic plastic. Mount on front of switchboards.

F. Install filler plates in unused spaces of panel-mounted sections.

G. Install overcurrent protective devices, surge protection devices, and instrumentation.

1. Set field-adjustable switches and circuit-breaker trip ranges.

H. Comply with NECA 1.

3.3 CONNECTIONS

A. Bond conduits entering underneath the switchboard to the equipment ground bus with a bonding conductor sized per NFPA 70.

B. Support and secure conductors within the switchboard according to NFPA 70.

C. Extend insulated equipment grounding cable to busway ground connection and support cable at intervals in vertical run.

3.4 IDENTIFICATION

A. Identify field-installed conductors, interconnecting wiring, and components; provide warning signs complying with requirements for identification specified in Section 260553 "Identification for Electrical Systems."

B. Switchboard Nameplates: Label each switchboard compartment with a nameplate complying with requirements for identification specified in Section 260553 "Identification for Electrical Systems."

C. Device Nameplates: Label each disconnecting and overcurrent protective device and each meter and control device mounted in compartment doors with a nameplate complying with requirements for identification specified in Section 260553 "Identification for Electrical Systems."

3.5 FIELD QUALITY CONTROL

A. Perform tests and inspections with the assistance of a factory-authorized service representative.

B. Tests and Inspections:

1. Acceptance Testing:

a. Test insulation resistance for each modified or new switchboard bus, component, connecting supply, feeder, and control circuit. Open control and metering circuits within the switchboard, and remove neutral connection to surge protection and other electronic devices prior to insulation test. Reconnect after test.
b. Test continuity of each circuit.

2. Perform each visual and mechanical inspection and electrical test stated in NETA Acceptance Testing Specification. Certify compliance with test parameters.
3. Correct malfunctioning units on-site where possible, and retest to demonstrate compliance; otherwise, replace with new units and retest.
4. Perform the following infrared scan tests and inspections, and prepare reports:

a. Initial Infrared Scanning: After Substantial Completion, but not more than 60 days after Final Acceptance, perform an infrared scan of each switchboard. Remove front panels so joints and connections are accessible to portable scanner.
b. Instruments and Equipment:

1) Use an infrared scanning device designed to measure temperature or to detect significant deviations from normal values. Provide calibration record for device.

5. Test and adjust controls, remote monitoring, and safeties. Replace damaged and malfunctioning controls and equipment.

C. Switchboard will be considered defective if it does not pass tests and inspections.

D. Prepare test and inspection reports, including a certified report that identifies switchboards included and that describes scanning results. Include notation of deficiencies detected, remedial action taken, and observations after remedial action.

3.6 ADJUSTING

A. Adjust moving parts and operable components to function smoothly, and lubricate as recommended by manufacturer.

B. Set field-adjustable circuit-breaker trip ranges as indicated.

3.7 PROTECTION

A. Temporary Heating: Apply temporary heat, to maintain temperature according to manufacturer's written instructions, until switchboard is ready to be energized and placed into service.

END OF SECTION 262413

SECTION 262816 - ENCLOSED SWITCHES AND CIRCUIT BREAKERS

PART 1 - GENERAL

1.1 RELATED DOCUMENTS

A. Drawings and general provisions of the Contract, including General and Supplementary Conditions and other Division 01 Specification Sections, apply to this Section.

1.2 SUMMARY

A. Section Includes:

1. Fusible switches.
2. Nonfusible switches.
3. Enclosures.

1.3 DEFINITIONS

A. NC: Normally closed.

B. NO: Normally open.

C. SPDT: Single pole, double throw.

1.4 ACTION SUBMITTALS

A. Product Data: For each type of enclosed switch, circuit breaker, accessory, and component indicated. Include nameplate ratings, dimensioned elevations, sections, weights, and manufacturers' technical data on features, performance, electrical characteristics, ratings, accessories, and finishes.

1. Enclosure types and details for types other than NEMA 250, Type 1.
2. Current and voltage ratings.
3. Short-circuit current ratings (interrupting and withstand, as appropriate).
4. Include evidence of a nationally recognized testing laboratory (NRTL) listing for series rating of installed devices.
5. Detail features, characteristics, ratings, and factory settings of individual overcurrent protective devices, accessories, and auxiliary components.
6. Include time-current coordination curves (average melt) for each type and rating of overcurrent protective device; include selectable ranges for each type of overcurrent protective device. Provide in electronic format.

B. Shop Drawings: For enclosed switches and circuit breakers.

1. Include plans, elevations, sections, details, and attachments to other work.
2. Include wiring diagrams for power, signal, and control wiring.

1.5 INFORMATIONAL SUBMITTALS

A. Seismic Qualification Data: Certificates, for enclosed switches and circuit breakers, accessories, and components, from manufacturer.

1. Basis for Certification: Indicate whether withstand certification is based on actual test of assembled components or on calculation.
2. Dimensioned Outline Drawings of Equipment Unit: Identify center of gravity and locate and describe mounting and anchorage provisions.
3. Detailed description of equipment anchorage devices on which the certification is based and their installation requirements.

B. Field quality-control reports.

1.6 CLOSEOUT SUBMITTALS

A. Operation and Maintenance Data: For enclosed switches and circuit breakers to include in emergency, operation, and maintenance manuals.

1. In addition to items specified in Section 017823 "Operation and Maintenance Data," include the following:

a. Manufacturer's written instructions for testing and adjusting enclosed switches and circuit breakers.
b. Time-current coordination curves (average melt) for each type and rating of overcurrent protective device; include selectable ranges for each type of overcurrent protective device. Provide in electronic format.

1.7 MAINTENANCE MATERIAL SUBMITTALS

A. Furnish extra materials that match products installed and that are packaged with protective covering for storage and identified with labels describing contents.

1. Fuses: Equal to 10 percent of quantity installed for each size and type, but no fewer than two of each size and type.
2. Fuse Pullers: Two for each size and type.

1.8 FIELD CONDITIONS

A. Environmental Limitations: Rate equipment for continuous operation under the following conditions unless otherwise indicated:

1. Ambient Temperature: Not less than minus 22 deg F (minus 30 deg C) and not exceeding 104 deg F (40 deg C).
2. Altitude: Not exceeding 6600 feet (2010 m).

1.9 WARRANTY

A. Manufacturer's Warranty: Manufacturer and Installer agree to repair or replace components that fail in materials or workmanship within specified warranty period.

1. Warranty Period: One year(s) from date of Substantial Completion.

PART 2 - PRODUCTS

2.1 PERFORMANCE REQUIREMENTS

A. Seismic Performance: Enclosed switches and circuit breakers shall withstand the effects of earthquake motions determined according to ASCE/SEI 7.

1. The term "withstand" means "the unit will remain in place without separation of any parts from the device when subjected to the seismic forces specified."

2.2 GENERAL REQUIREMENTS

A. Source Limitations: Obtain enclosed switches and circuit breakers, overcurrent protective devices, components, and accessories, within same product category, from single manufacturer.

B. Product Selection for Restricted Space: Drawings indicate maximum dimensions for enclosed switches and circuit breakers, including clearances between enclosures, and adjacent surfaces and other items. Comply with indicated maximum dimensions.

C. Electrical Components, Devices, and Accessories: Listed and labeled as defined in NFPA 70, by an NRTL, and marked for intended location and application.

D. Comply with NFPA 70.

2.3 FUSIBLE SWITCHES

A. Type HD, Heavy Duty:

1. Single throw.
2. Two pole.
3. 240-V ac.
4. 200 A and smaller.
5. UL 98 and NEMA KS 1, horsepower rated, with clips or bolt pads to accommodate specified fuses.
6. Lockable handle with capability to accept three padlocks, and interlocked with cover in closed position.

B. Accessories:

1. Equipment Ground Kit: Internally mounted and labeled for copper and aluminum ground conductors.
2. Neutral Kit: Internally mounted; insulated, capable of being grounded and bonded; labeled for copper and aluminum neutral conductors.
3. Class R Fuse Kit: Provides rejection of other fuse types when Class R fuses are specified.
4. Lugs: Mechanical type, suitable for number, size, and conductor material.

2.4 NONFUSIBLE SWITCHES

A. Type HD, Heavy Duty, Two Pole, Single Throw, 240-V ac, 200 A and Smaller: UL 98 and NEMA KS 1, horsepower rated, lockable handle with capability to accept three padlocks, and interlocked with cover in closed position.

B. Accessories:

1. Equipment Ground Kit: Internally mounted and labeled for copper and aluminum ground conductors.
2. Neutral Kit: Internally mounted; insulated, capable of being grounded and bonded; labeled for copper and aluminum neutral conductors.
3. Lugs: Mechanical type, suitable for number, size, and conductor material.

2.5 ENCLOSURES

A. Enclosed Switches and Circuit Breakers: UL 489, NEMA KS 1, NEMA 250, and UL 50, to comply with environmental conditions at installed location.

B. Enclosure Finish: The enclosure shall be finished with gray baked enamel paint, electrodeposited on cleaned, phosphatized steel (NEMA 250 Type 1) or gray baked enamel paint, electrodeposited on cleaned, phosphatized galvannealed steel (NEMA 250 Types 3R, 12).

PART 3 - EXECUTION

3.1 EXAMINATION

A. Examine elements and surfaces to receive enclosed switches and circuit breakers for compliance with installation tolerances and other conditions affecting performance of the Work.

B. Proceed with installation only after unsatisfactory conditions have been corrected.

1. Commencement of work shall indicate Installer's acceptance of the areas and conditions as satisfactory.

3.2 ENCLOSURE ENVIRONMENTAL RATING APPLICATIONS

A. Enclosed Switches and Circuit Breakers: Provide enclosures at installed locations with the following environmental ratings.

1. Indoor, Dry and Clean Locations: NEMA 250, Type 1.
2. Outdoor Locations: NEMA 250, Type 3R.

3.3 INSTALLATION

A. Coordinate layout and installation of switches, circuit breakers, and components with equipment served and adjacent surfaces. Maintain required workspace clearances and required clearances for equipment access doors and panels.

B. Install individual wall-mounted switches and circuit breakers with tops at uniform height unless otherwise indicated.

C. Comply with mounting and anchoring requirements specified in Section 260548.16 "Seismic Controls for Electrical Systems."

D. Install fuses in fusible devices.

E. Comply with NFPA 70 and NECA 1.

3.4 IDENTIFICATION

A. Comply with requirements in Section 260553 "Identification for Electrical Systems."

1. Identify field-installed conductors, interconnecting wiring, and components; provide warning signs.
2. Label each enclosure with engraved metal or laminated-plastic nameplate.

3.5 FIELD QUALITY CONTROL

A. Perform tests and inspections.

B. Tests and Inspections for Switches:

1. Visual and Mechanical Inspection:

a. Inspect physical and mechanical condition.
b. Inspect anchorage, alignment, grounding, and clearances.
c. Verify that the unit is clean.
d. Verify blade alignment, blade penetration, travel stops, and mechanical operation.
e. Verify that fuse sizes and types match the Specifications and Drawings.
f. Verify that each fuse has adequate mechanical support and contact integrity.
g. Inspect bolted electrical connections for high resistance using one of the two following methods:

1) Use a low-resistance ohmmeter.

a) Compare bolted connection resistance values to values of similar connections. Investigate values that deviate from those of similar bolted connections by more than 50 percent of the lowest value.

2) Verify tightness of accessible bolted electrical connections by calibrated torque-wrench method in accordance with manufacturer's published data or NETA ATS Table 100.12.

a) Bolt-torque levels shall be in accordance with manufacturer's published data. In the absence of manufacturer's published data, use NETA ATS Table 100.12.

h. Verify that operation and sequencing of interlocking systems is as described in the Specifications and shown on the Drawings.
i. Verify correct phase barrier installation.
j. Verify lubrication of moving current-carrying parts and moving and sliding surfaces.

2. Electrical Tests:

    a. Perform resistance measurements through bolted connections with a low-resistance ohmmeter. Compare bolted connection resistance values to values of similar connections. Investigate values that deviate from adjacent poles or similar switches by more than 50 percent of the lowest value.
    b. Measure contact resistance across each switchblade fuseholder. Drop values shall not exceed the high level of the manufacturer's published data. If manufacturer's published data are not available, investigate values that deviate from adjacent poles or similar switches by more than 50 percent of the lowest value.
    c. Perform insulation-resistance tests for one minute on each pole, phase-to-phase and phase-to-ground with switch closed, and across each open pole. Apply voltage in accordance with manufacturer's published data. In the absence of manufacturer's published data, use Table 100.1 from the NETA ATS. Investigate values of insulation resistance less than those published in Table 100.1 or as recommended in manufacturer's published data.
    d. Measure fuse resistance. Investigate fuse-resistance values that deviate from each other by more than 15 percent.
    e. Perform ground fault test according to NETA ATS 7.14 "Ground Fault Protection Systems, Low-Voltage."

C. Enclosed switches will be considered defective if they do not pass tests and inspections.

D. Prepare test and inspection reports.

    1. Test procedures used.
    2. Include identification of each enclosed switch and circuit breaker tested and describe test results.
    3. List deficiencies detected, remedial action taken, and observations after remedial action.

3.6 ADJUSTING

A. Adjust moving parts and operable components to function smoothly, and lubricate as recommended by manufacturer.

END OF SECTION 262816

BELLVIEW ELEMENTARY SCHOOL

INDEX OF DRAWINGS

SHEET NO.	DRAWING CONTENTS
C0.0	COVER SHEET
M1.0	MECHANICAL DEMO PLAN – 1ST FLR AREA C
M1.1	MECHANICAL DEMO PLANS – 2ND FLR & ROOF AREA C
M2.0	MECHANICAL FLOOR PLAN – 1ST FLR AREA A
M2.1	MECHANICAL FLOOR PLAN – 1ST FLR AREA B
M2.2	MECHANICAL FLOOR PLAN – 1ST FLR AREA C
M2.3	MECHANICAL FLOOR PLAN – 2ND FLR AREA C
M2.4	MECHANICAL MEZZANINE PLANS – AREA A & B
M2.5	MECHANICAL ATTIC PLAN – AREA C
M3.2	MECHANICAL PIPING PLAN – 1ST FLR AREA C
M4.0	MECHANICAL ROOF PLAN – AREA A
M4.1	MECHANICAL ROOF PLAN – AREA B
M4.2	MECHANICAL ROOF PLAN – AREA C
M5.0	MECHANICAL CONTROLS
M6.0	MECHANICAL SCHEDULES & DETAILS
M6.1	MECHANICAL DETAILS
M6.2	MECHANICAL DETAILS
E0.01	ELECTRICAL LEGENDS AND NOTES
E0.02	ELECTRICAL DIAGRAM
E2.01	ELECTRICAL PLAN 1ST FLOOR AREA C
E2.02	ELECTRICAL PLAN 2ND FLOOR AREA C
E2.03	ELECTRICAL PLAN MEZZANINE AREA A
E2.04	ELECTRICAL PLAN MEZZANINE AREA B
E2.05	ELECTRICAL PLAN ROOF AREA C

PROJECT DIRECTORY

OWNER

ASHLAND SCHOOL DISTRICT
885 SISKIYOU BOULEVARD
ASHLAND, OR 97520
CONTACT: STEVE MITZEL
DIRECTOR OF OPERATIONS
PHONE (541) 201–3700 x1600

OWNERS REP

HMK COMPANY
46 N. FRONT STREET, SUITE 201
MEDFORD, OR 97501
CONTACT: CHRIS MCKAY
PHONE: (541) 210–9845

MECHANICAL ENGINEER

MFIA CONSULTING ENGINEERS
2007 SE ASH ST
PORTLAND, OR 97214
CONTACT: ANTONIO JOHNSON
PHONE: (503) 234–0548

ELECTRICAL ENGINEER

DOUGLAS ENGINEERING PACIFIC, INC
415 WILLIAMSON WAY, SUITE 7
ASHLAND, OR 97520
CONTACT: MYRON HUDSON
PHONE: (541) 482–3938 x303

PROPERTY INFORMATION

ADDRESS:
1070 TOLMAN CREEK ROAD
ASHLAND, OREGON 97520

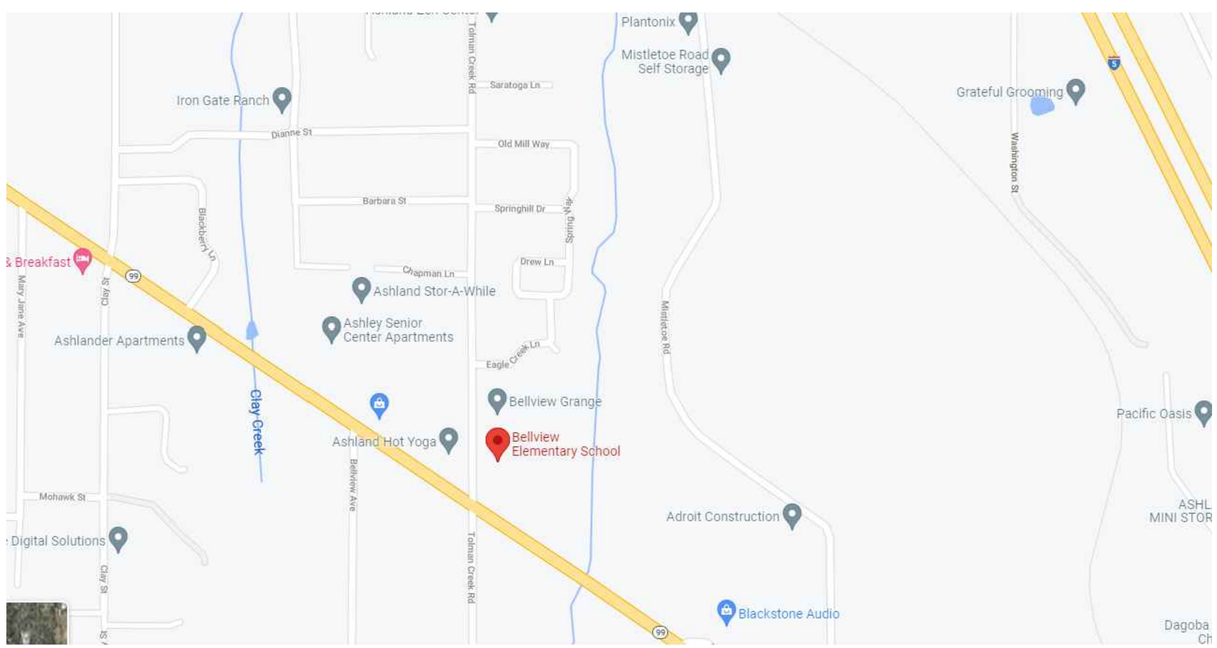

AREA MAP

KEY PLAN

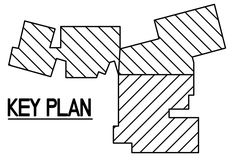

REGISTERED PROFESSIONAL ENGINEER
17884
OREGON
JULY 25, 1985
SCOTT W. MILLER
EXPIRES: 31DEC24

Date: 11/17/2022
Proj No: 10172
Drawn By: ARJ
Chkd By: SM
DSGN By: SM
Acad File:

ASHLAND SD BELLVIEW ELEMENTARY SCHOOL
1070 TOLMAN CREEK RD
ASHLAND OREGON

COVER SHEET

MFIA INC.

Consulting Engineers
2007 S.E. Ash St.
Portland, OR 97214
PHN: (503) 234-0548
FAX: (503) 234-0677
WWW.MFIA-ENG.COM

SHEET
C0.0
1 OF 1

MECHANICAL DEMO NOTES: (#)

1. SEE 2/M6.2 FOR MODIFICATION TO BOILER B-1 & B-2 SYSTEM PIPING.
2. EXISTING CHILLED WATER PUMPS CHP-1 & 2 TO BE REMOVED FOR REPLACEMENT. COORD. W/ DIV. 26 FOR REPLACEMENT OF DISCONNECT NEAR PUMP.
3. EXISTING PUMPS HWP-1 & 2. COORD. W/ DIV. 26 FOR REPLACEMENT OF DISCONNECT NEAR PUMP.
4. EXISTING UNIT TO BE REMOVED AND SALVAGED TO OWNER. REFRIGERANT LINES TO BE SEALED AT UNIT AND REMOVED. UNIT TO BE DELIVERED TO OWNER IN WORKING CONDITION.
5. EXISTING TERMINAL UNIT. (CONTROL WORK COMPLETED UNDER PREVIOUS PHASE)
6. EXISTING AC UNIT. (CONTROL WORK COMPLETED UNDER PREVIOUS PHASE)
7. EXISTING EXHAUST FAN, (CONTROL WORK COMPLETED UNDER PREVIOUS PHASE)
8. (E) EQUIPMENT, (CONTROL WORK COMPLETED UNDER PREVIOUS PHASE)

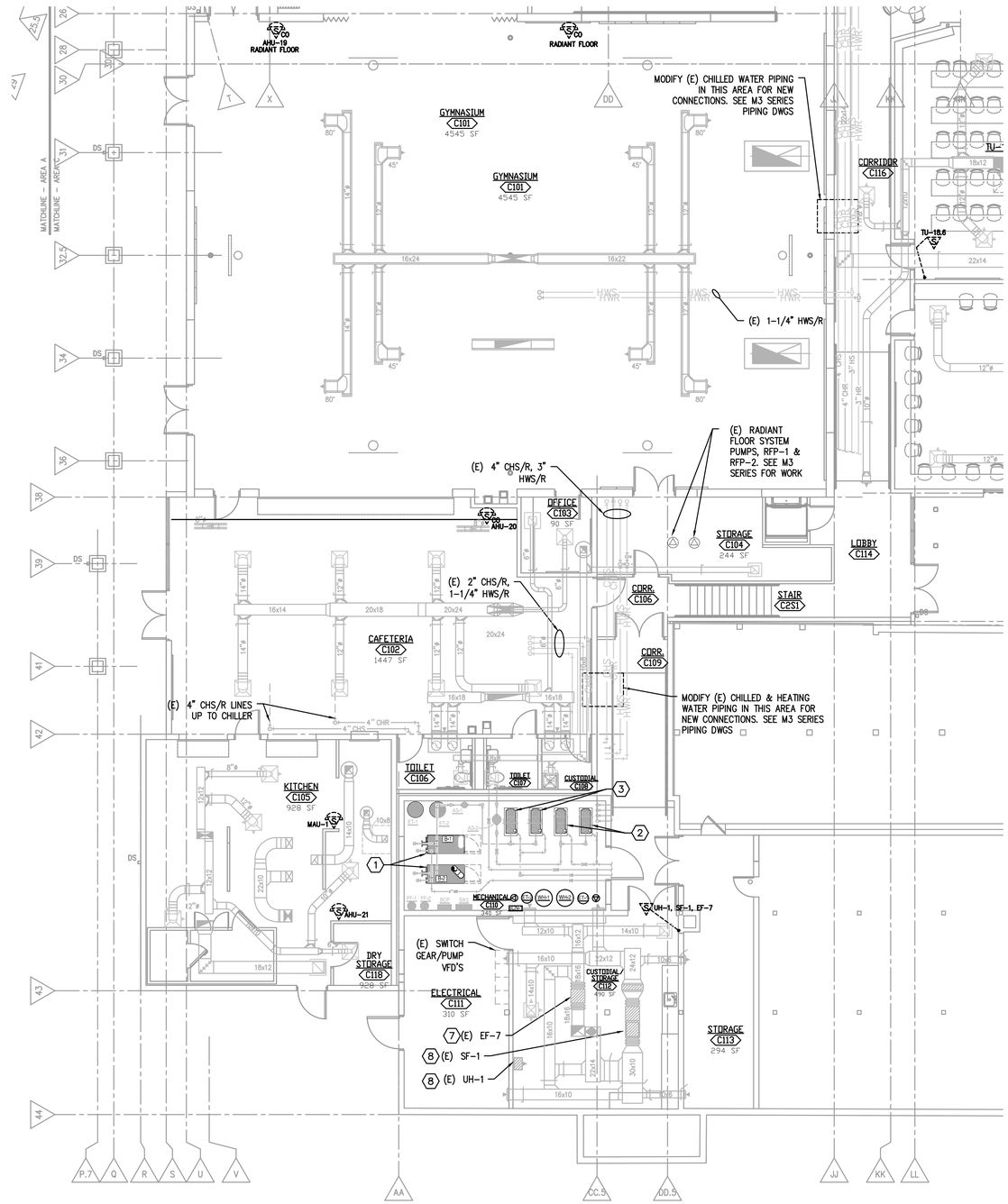

1 / M1.0 MECHANICAL DEMO PLAN – 1ST FLR AREA C

SCALE: 1/8"=1'-0"

KEY PLAN

REGISTERED PROFESSIONAL ENGINEER 17884 OREGON JULY 25, 1995 SCOTT W. MILLER
EXPIRES: 31DEC24

Date:	11/17/2022
Proj No:	10172
Drawn By:	ABB
Chkd By:	SM
DSGN By:	SM
Acad File:	

ASHLAND SD BELLVIEW ELEMENTARY SCHOOL
1070 TOLMAN CREEK RD
ASHLAND OREGON

MECHANICAL DEMO PLAN

MFIA INC.

Consulting Engineers
2007 S.E. Ash St.
Portland, OR 97214
PHN: (503) 234-0548
FAX: (503) 234-0677
WWW.MFIA-ENG.COM

SHEET
M1.0

MECHANICAL DEMO NOTES:

1. SEE 2/M6.2 FOR MODIFICATION TO BOILER B-1 & B-2 SYSTEM PIPING.
2. EXISTING CHILLED WATER PUMPS CHP-1 & 2 TO BE REMOVED FOR REPLACEMENT. COORD. W/ DIV. 26 FOR REPLACEMENT OF DISCONNECT NEAR PUMP.
3. EXISTING PUMPS HWP-1 & 2. COORD. W/ DIV. 26 FOR REPLACEMENT OF DISCONNECT NEAR PUMP.
4. EXISTING UNIT TO BE REMOVED AND SALVAGED TO OWNER. REFRIGERANT LINES TO BE SEALED AT UNIT AND REMOVED. UNIT TO BE DELIVERED TO OWNER IN WORKING CONDITION.
5. EXISTING TERMINAL UNIT. (CONTROL WORK COMPLETED UNDER PREVIOUS PHASE)
6. EXISTING AC UNIT. (CONTROL WORK COMPLETED UNDER PREVIOUS PHASE)
7. EXISTING EXHAUST FAN, (CONTROL WORK COMPLETED UNDER PREVIOUS PHASE)
8. (E) EQUIPMENT, (CONTROL WORK COMPLETED UNDER PREVIOUS PHASE)

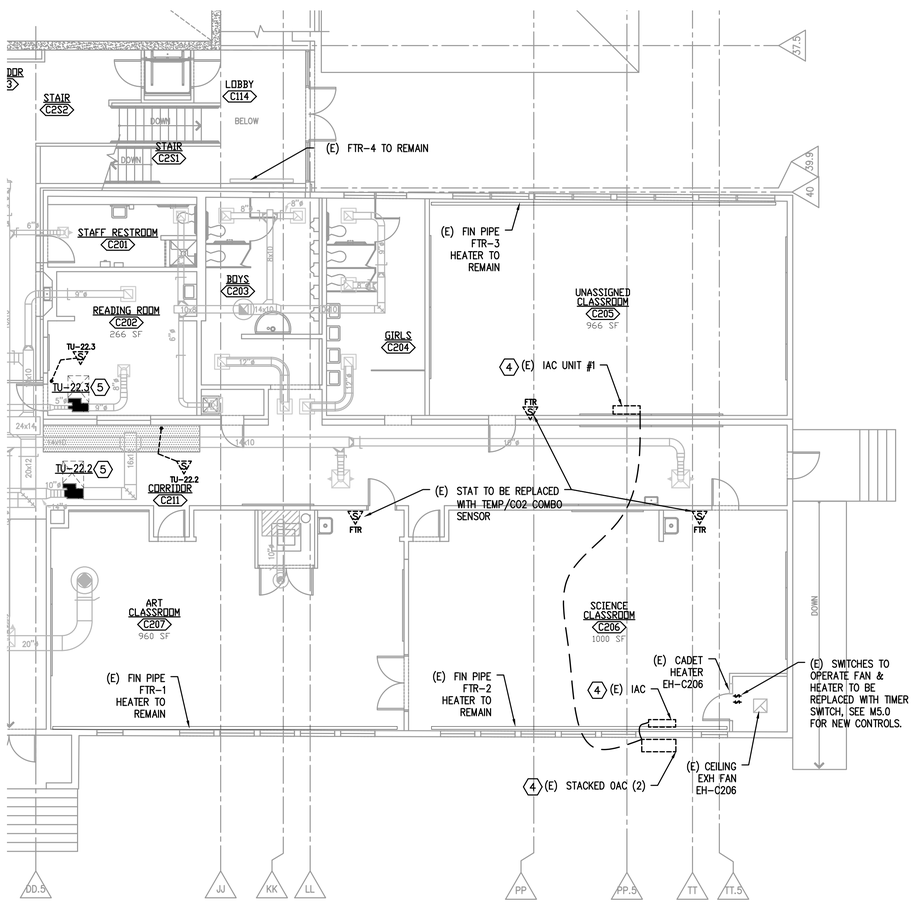

1 / M1.1 MECHANICAL DEMO PLAN – PARTIAL 2ND AREA C
SCALE: 1/8"=1'-0"

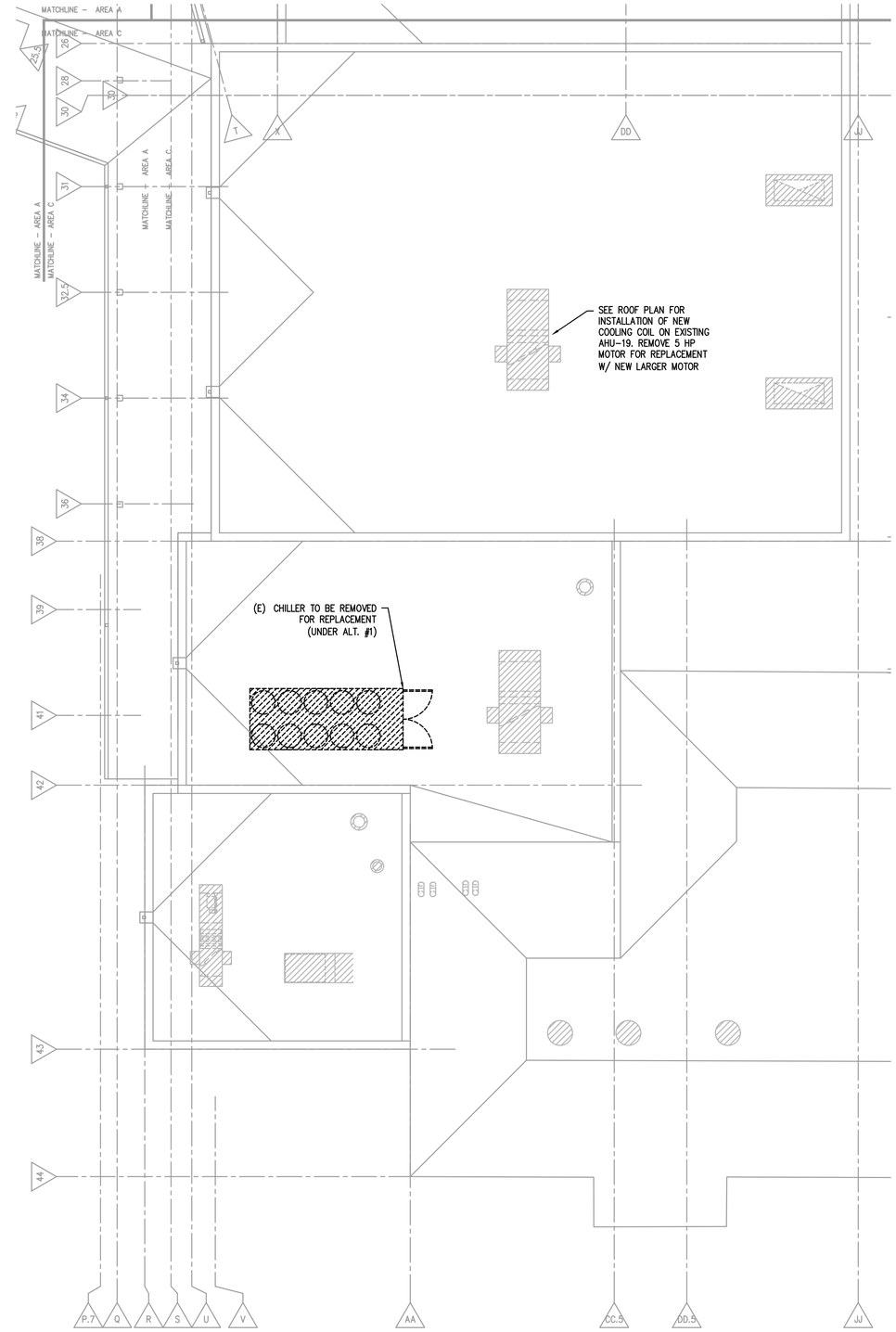

2 / M1,1 MECHANICAL DEMO PLAN – PARTIAL ROOF AREA C
SCALE: 1/8"=1'-0"

KEY PLAN

REGISTERED PROFESSIONAL ENGINEER 17884 OREGON JULY 25, 1985 SCOTT W. MILLER
EXPIRES: 31DEC24

Date: 11/17/2022
Proj No: 10172
Drawn By: ARB
Chkd By: SM
DSGN By: SM
Acad File:

ASHLAND SD BELLVIEW ELEMENTARY SCHOOL
1070 TOLMAN CREEK RD
ASHLAND OREGON

MECHANICAL DEMO PLAN

MFIA INC.

Consulting Engineers
2007 S.E. Ash St.
Portland, OR 97214
PHN: (503) 234-0548
FAX: (503) 234-0677
WWW.MFIA-ENG.COM

SHEET
M1.1

MECHANICAL GENERAL NOTES:

- ENSURE ALL STRAINERS ARE CLEAN PRIOR TO WATER SIDE BALANCING.
- ALL HEATING AND COOLING COILS, RADIANT HEAT SYSTEMS, AND FIN PIPE UNITS TO BE WATER BALANCED.
- COMPLETE AIR BALANCING IS LIMITED TO AHU-19, PRESSURE RELIEF FANS AND NEW AHU SYSTEMS.

MECHANICAL PLAN NOTES: (X)

A. 30X14 OSA FROM BELOW & UP TO ATTIC SPACE. SEE M2.5.
B. 20x14 OSA FROM BELOW & UP TO ATTIC SPACE. SEE M2.5.
C. 14X22 SA FROM BELOW. TRANSITION TO 18X18 ABOVE FLOOR PENETRATION IN CHASE.
D. 14X18 SA FROM BELOW. TRANSITION TO 16X16 ABOVE FLOOR PENETRATION IN CHASE.
E. RETURN PLENUM FROM BELOW TO FLOOR GRILLE, SEE M2.2 FOR SIZE.
F. 22X22 RELIEF W/ 22X14 RELIEF DUCT UP INTO ATTIC SPACE. SEE SHEET M2.5 FOR CONTINUATION..
G. SEE DETAIL 1/M5.0 FOR CONTROL WORK.
H. CONTROL WORK FOR THIS DEVICE COMPLETED IN PREVIOUS PHASE.
I. SEE DETAIL 3/M5.0 FOR CONTROL WORK.
J. (E) TERMINAL UNIT, CONTROL WORK FOR THIS DEVICE COMPLETED IN PREVIOUS PHASE.
K. CONTROL WORK FOR THIS DEVICE COMPLETED IN PREVIOUS PHASE.
L. BALANCE TO AIRFLOW LISTED.
M. SEE 4/M5.0 FOR CONTROL WORK. REMOVE (E) BALANCING VALVE AND INSTALL FLOW CONTROL VALVE SIZED FOR 3.5 GPM.
N. SENSOR REPLACED IN PREVIOUS CONTROL WORK.

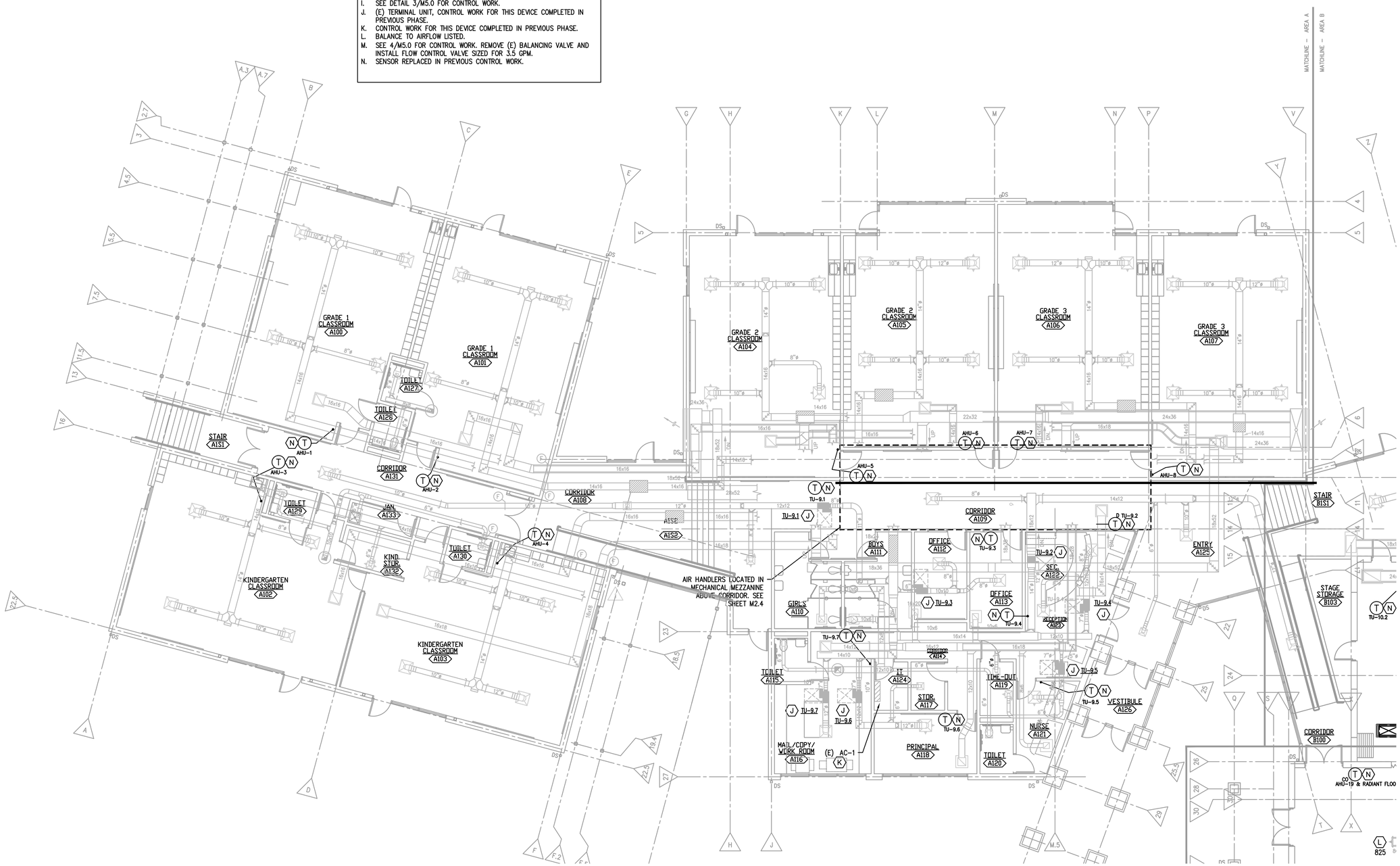

1 M2.0 MECHANICAL PLAN – 1ST FLR AREA A
SCALE: 1/8"=1'-0"

KEY PLAN

REGISTERED PROFESSIONAL ENGINEER 17884 OREGON JULY 25, 1985 SCOTT W. MILLER
EXPIRES: 31DEC24

Date: 11/17/2022
Proj No: 10172
Drawn By: ARB
Chkd By: SM
DSGN By: SM
Acad File:

ASHLAND SD BELLVIEW ELEMENTARY SCHOOL
1070 TOLMAN CREEK RD
ASHLAND OREGON

MECHANICAL PLAN – 1ST FLR AREA A

MFIA INC.

Consulting Engineers
2007 S.E. Ash St.
Portland, OR 97214
PHN: (503) 234-0548
FAX: (503) 234-0677
WWW.MFIA-ENG.COM

SHEET
M2.0

MECHANICAL GENERAL NOTES:

- ENSURE ALL STRAINERS ARE CLEAN PRIOR TO WATER SIDE BALANCING.
- ALL HEATING AND COOLING COILS, RADIANT HEAT SYSTEMS, AND FIN PIPE UNITS TO BE WATER BALANCED.
- COMPLETE AIR BALANCING IS LIMITED TO AHU-19, PRESSURE RELIEF FANS AND NEW AHU SYSTEMS.

MECHANICAL PLAN NOTES: (X)

A. 30X14 OSA FROM BELOW & UP TO ATTIC SPACE. SEE M2.5.
B. 20x14 OSA FROM BELOW & UP TO ATTIC SPACE. SEE M2.5.
C. 14X22 SA FROM BELOW. TRANSITION TO 18X18 ABOVE FLOOR PENETRATION IN CHASE.
D. 14X18 SA FROM BELOW. TRANSITION TO 16X16 ABOVE FLOOR PENETRATION IN CHASE.
E. RETURN PLENUM FROM BELOW TO FLOOR GRILLE, SEE M2.2 FOR SIZE.
F. 22X22 RELIEF W/ 22X14 RELIEF DUCT UP INTO ATTIC SPACE. SEE SHEET M2.5 FOR CONTINUATION..
G. SEE DETAIL 1/M5.0 FOR CONTROL WORK.
H. CONTROL WORK FOR THIS DEVICE COMPLETED IN PREVIOUS PHASE.
I. SEE DETAIL 3/M5.0 FOR CONTROL WORK.
J. (E) TERMINAL UNIT, CONTROL WORK FOR THIS DEVICE COMPLETED IN PREVIOUS PHASE.
K. CONTROL WORK FOR THIS DEVICE COMPLETED IN PREVIOUS PHASE.
L. BALANCE TO AIRFLOW LISTED.
M. SEE 4/M5.0 FOR CONTROL WORK. REMOVE (E) BALANCING VALVE AND INSTALL FLOW CONTROL VALVE SIZED FOR 3.5 GPM.
N. SENSOR REPLACED IN PREVIOUS CONTROL WORK.

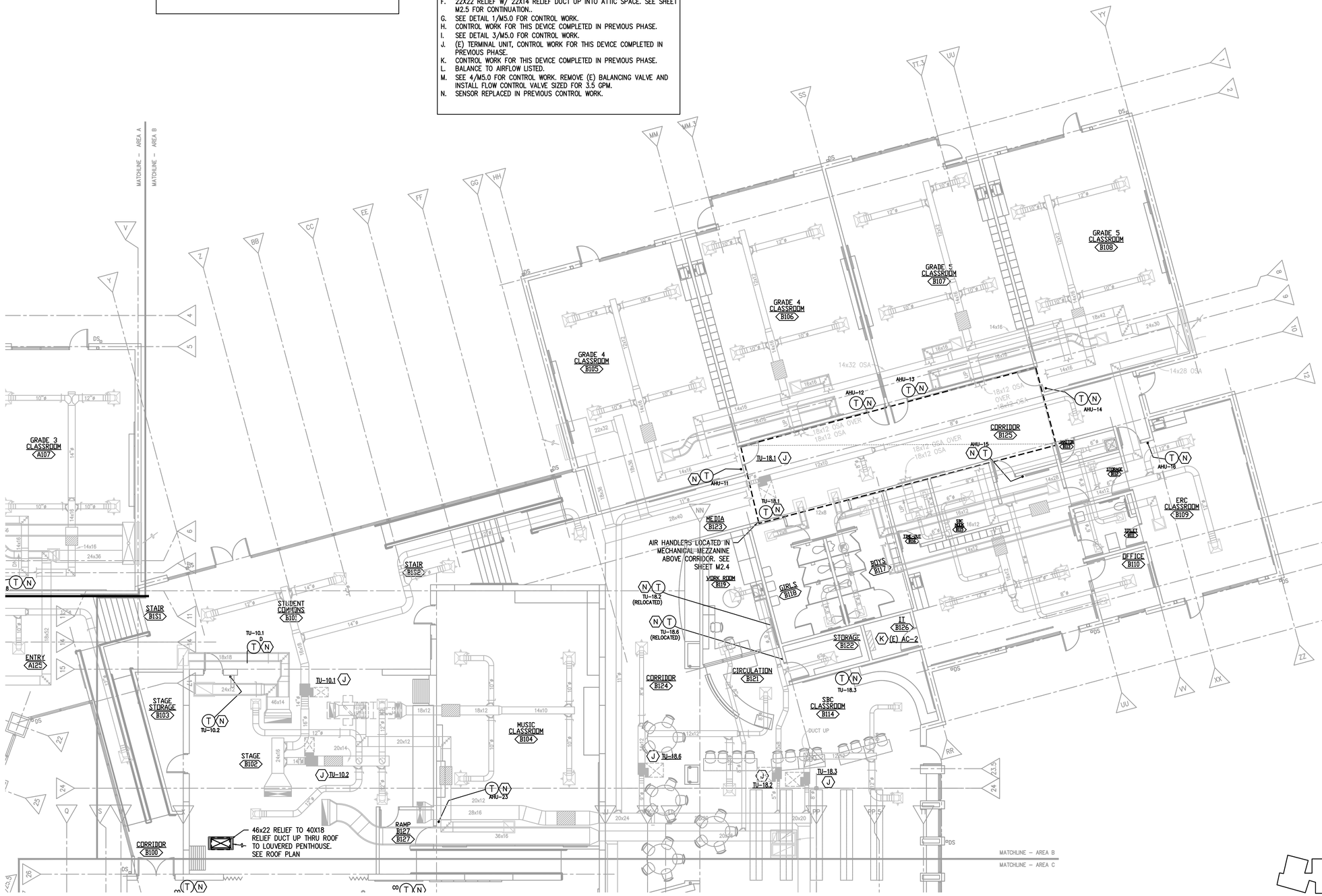

1 / M2.1 MECHANICAL PLAN – 1ST FLR AREA B
SCALE: 1/8"=1'-0"

KEY PLAN

REGISTERED PROFESSIONAL ENGINEER 17884 OREGON JULY 25, 1985 SCOTT W. MILLER
EXPIRES: 31DEC24

Date: 11/17/2022
Proj No: 10172
Drawn By: ARB
Chkd By: SM
DSGN By: SM
Acad File:

ASHLAND SD BELLVIEW ELEMENTARY SCHOOL
1070 TOLMAN CREEK RD
ASHLAND OREGON

MECHANICAL PLAN – 1ST FLR AREA B

MFIA INC.

Consulting Engineers
2007 S.E. Ash St.
Portland, OR 97214
PHN: (503) 234-0548
FAX: (503) 234-0677
WWW.MFIA-ENG.COM

SHEET
M2.1

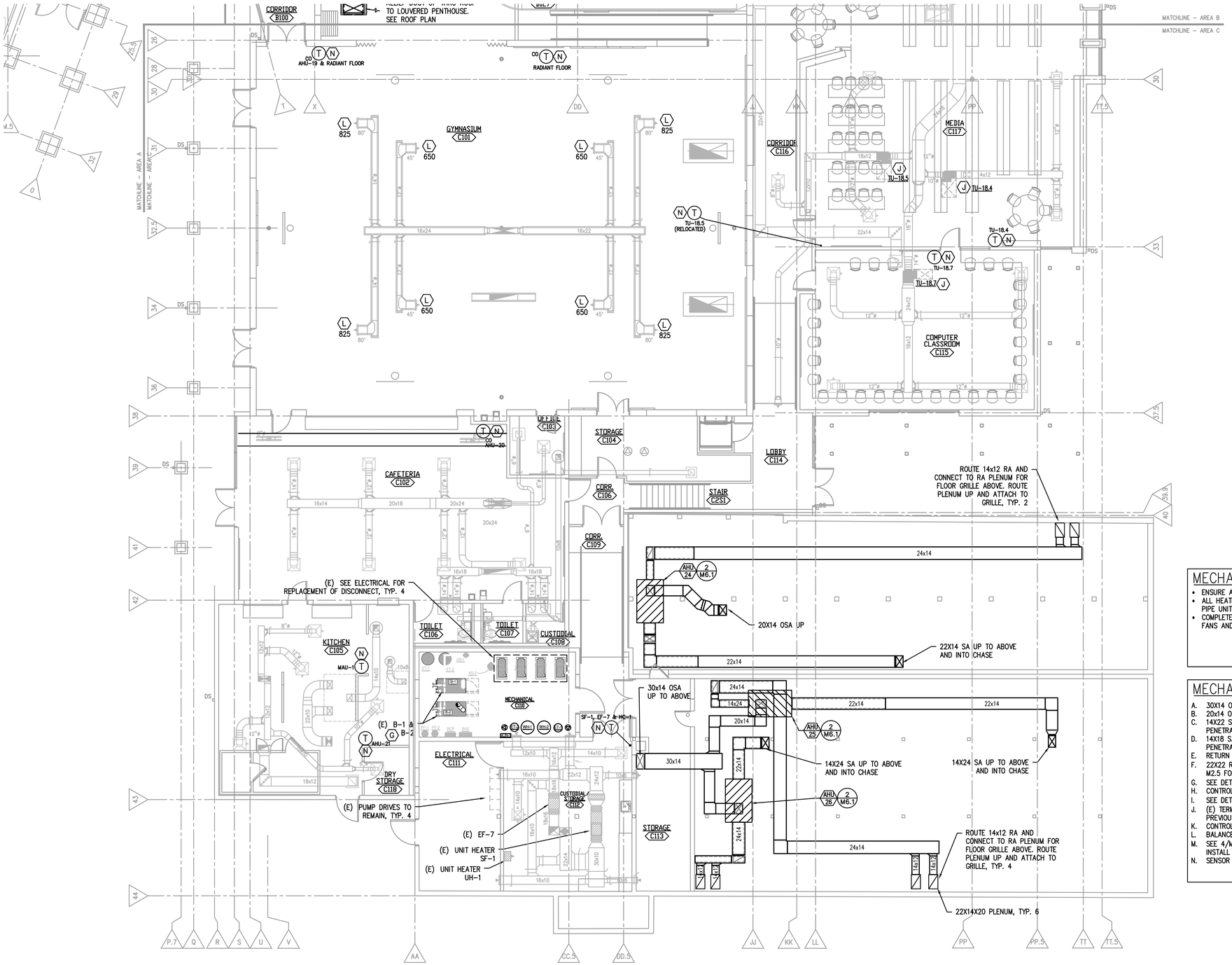

1 M2.2 MECHANICAL PLAN – 1ST FLR AREA C

SCALE: 1/8"=1'-0"

MECHANICAL GENERAL NOTES:

- ENSURE ALL STRAINERS ARE CLEAN PRIOR TO WATER SIDE BALANCING.
- ALL HEATING AND COOLING COILS, RADIANT HEAT SYSTEMS, AND FIN PIPE UNITS TO BE WATER BALANCED.
- COMPLETE AIR BALANCING IS LIMITED TO AHU-19, PRESSURE RELIEF FANS AND NEW AHU SYSTEMS.

MECHANICAL PLAN NOTES: (X)

A. 30X14 OSA FROM BELOW & UP TO ATTIC SPACE. SEE M2.5.
B. 20x14 OSA FROM BELOW & UP TO ATTIC SPACE. SEE M2.5.
C. 14X22 SA FROM BELOW. TRANSITION TO 18X18 ABOVE FLOOR PENETRATION IN CHASE.
D. 14X18 SA FROM BELOW. TRANSITION TO 16X16 ABOVE FLOOR PENETRATION IN CHASE.
E. RETURN PLENUM FROM BELOW TO FLOOR GRILLE, SEE M2.2 FOR SIZE.
F. 22X22 RELIEF W/ 22X14 RELIEF DUCT UP INTO ATTIC SPACE. SEE SHEET M2.5 FOR CONTINUATION..
G. SEE DETAIL 1/M5.0 FOR CONTROL WORK.
H. CONTROL WORK FOR THIS DEVICE COMPLETED IN PREVIOUS PHASE.
I. SEE DETAIL 3/M5.0 FOR CONTROL WORK.
J. (E) TERMINAL UNIT, CONTROL WORK FOR THIS DEVICE COMPLETED IN PREVIOUS PHASE.
K. CONTROL WORK FOR THIS DEVICE COMPLETED IN PREVIOUS PHASE.
L. BALANCE TO AIRFLOW LISTED.
M. SEE 4/M5.0 FOR CONTROL WORK. REMOVE (E) BALANCING VALVE AND INSTALL FLOW CONTROL VALVE SIZED FOR 3.5 GPM.
N. SENSOR REPLACED IN PREVIOUS CONTROL WORK.

KEY PLAN

REGISTERED PROFESSIONAL ENGINEER 17884 OREGON JULY 25, 1985 SCOTT W. MILLER
EXPIRES: 31DEC24

Date: 11/17/2022
Proj No: 10172
Drawn By: ARB
Chkd By: SM
DSGN By: SM
Acad File:

ASHLAND SD BELLVIEW ELEMENTARY SCHOOL
1070 TOLMAN CREEK RD
ASHLAND OREGON

MECHANICAL PLAN – 1ST FLR AREA C

MFIA INC.

Consulting Engineers
2007 S.E. Ash St.
Portland, OR 97214
PHN: (503) 234-0548
FAX: (503) 234-0677
WWW.MFIA-ENG.COM

SHEET
M2.2

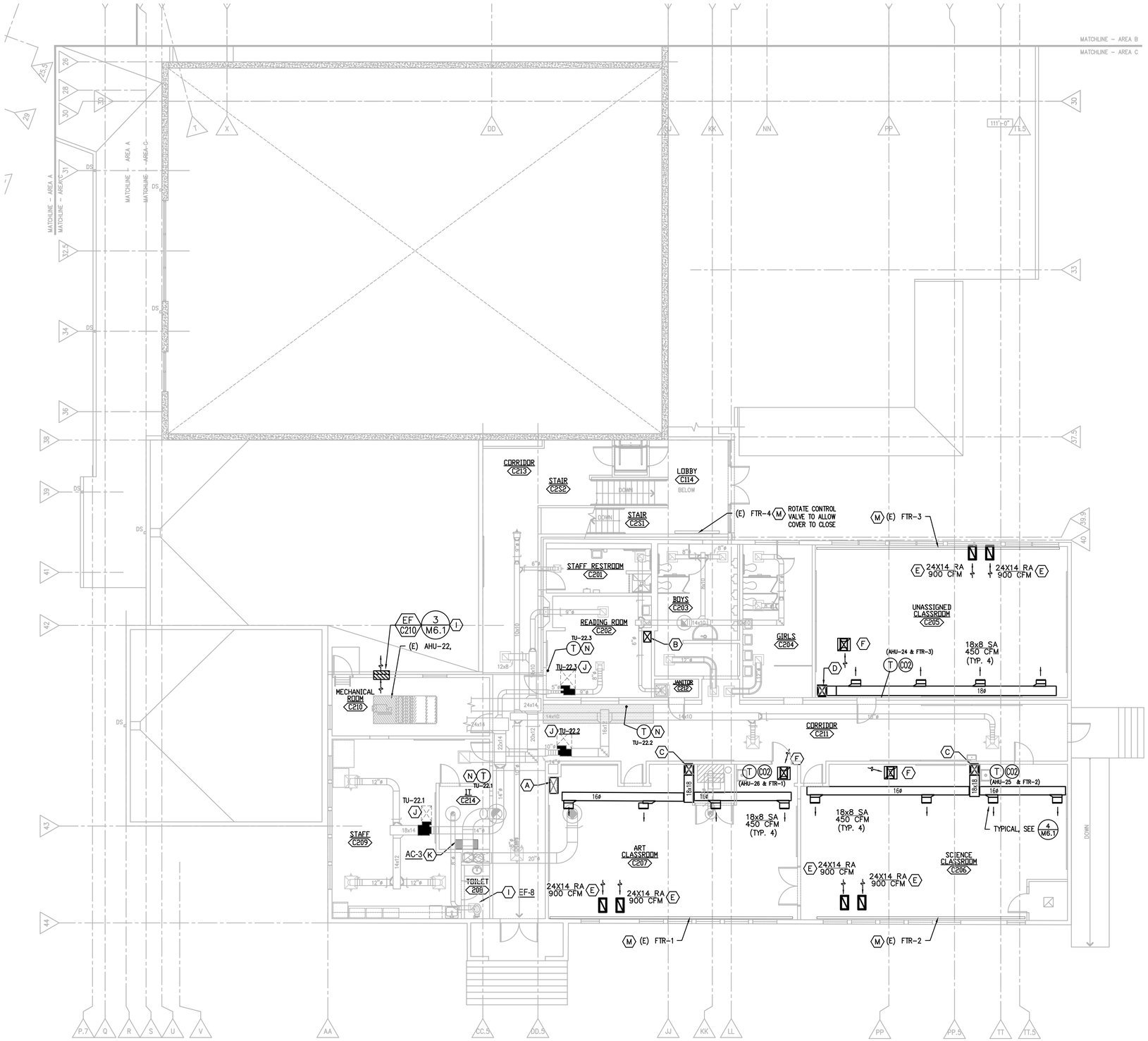

1 M2.3 MECHANICAL PLAN – 2ND FLR AREA C

SCALE: 1/8"=1'-0"

MECHANICAL GENERAL NOTES:

- ENSURE ALL STRAINERS ARE CLEAN PRIOR TO WATER SIDE BALANCING.
- ALL HEATING AND COOLING COILS, RADIANT HEAT SYSTEMS, AND FIN PIPE UNITS TO BE WATER BALANCED.
- COMPLETE AIR BALANCING IS LIMITED TO AHU-19, PRESSURE RELIEF FANS AND NEW AHU SYSTEMS.

MECHANICAL PLAN NOTES: (X)

A. 30X14 OSA FROM BELOW & UP TO ATTIC SPACE. SEE M2.5.
B. 20x14 OSA FROM BELOW & UP TO ATTIC SPACE. SEE M2.5.
C. 14X22 SA FROM BELOW. TRANSITION TO 18X18 ABOVE FLOOR PENETRATION IN CHASE.
D. 14X18 SA FROM BELOW. TRANSITION TO 16X16 ABOVE FLOOR PENETRATION IN CHASE.
E. RETURN PLENUM FROM BELOW TO FLOOR GRILLE, SEE M2.2 FOR SIZE.
F. 22X22 RELIEF W/ 22X14 RELIEF DUCT UP INTO ATTIC SPACE. SEE SHEET M2.5 FOR CONTINUATION..
G. SEE DETAIL 1/M5.0 FOR CONTROL WORK.
H. CONTROL WORK FOR THIS DEVICE COMPLETED IN PREVIOUS PHASE.
I. SEE DETAIL 3/M5.0 FOR CONTROL WORK.
J. (E) TERMINAL UNIT, CONTROL WORK FOR THIS DEVICE COMPLETED IN PREVIOUS PHASE.
K. CONTROL WORK FOR THIS DEVICE COMPLETED IN PREVIOUS PHASE.
L. BALANCE TO AIRFLOW LISTED.
M. SEE 4/M5.0 FOR CONTROL WORK. REMOVE (E) BALANCING VALVE AND INSTALL FLOW CONTROL VALVE SIZED FOR 3.5 GPM.
N. SENSOR REPLACED IN PREVIOUS CONTROL WORK.

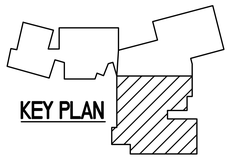

REGISTERED PROFESSIONAL ENGINEER 17884 OREGON JULY 25, 1985 SCOTT W. MILLER
EXPIRES: 31DEC24

Date: 11/17/2022
Proj No: 10172
Drawn By: ARB
Chkd By: SM
DSGN By: SM
Acad File:

ASHLAND SD BELLVIEW ELEMENTARY SCHOOL
1070 TOLMAN CREEK RD
ASHLAND OREGON

MECHANICAL PLAN – 2ND FLR AREA C

MFA INC.

Consulting Engineers
2007 S.E. Ash St.
Portland, OR 97214
PHN: (503) 234-0548
FAX: (503) 234-0677
WWW.MFA-ENG.COM

SHEET
M2.3

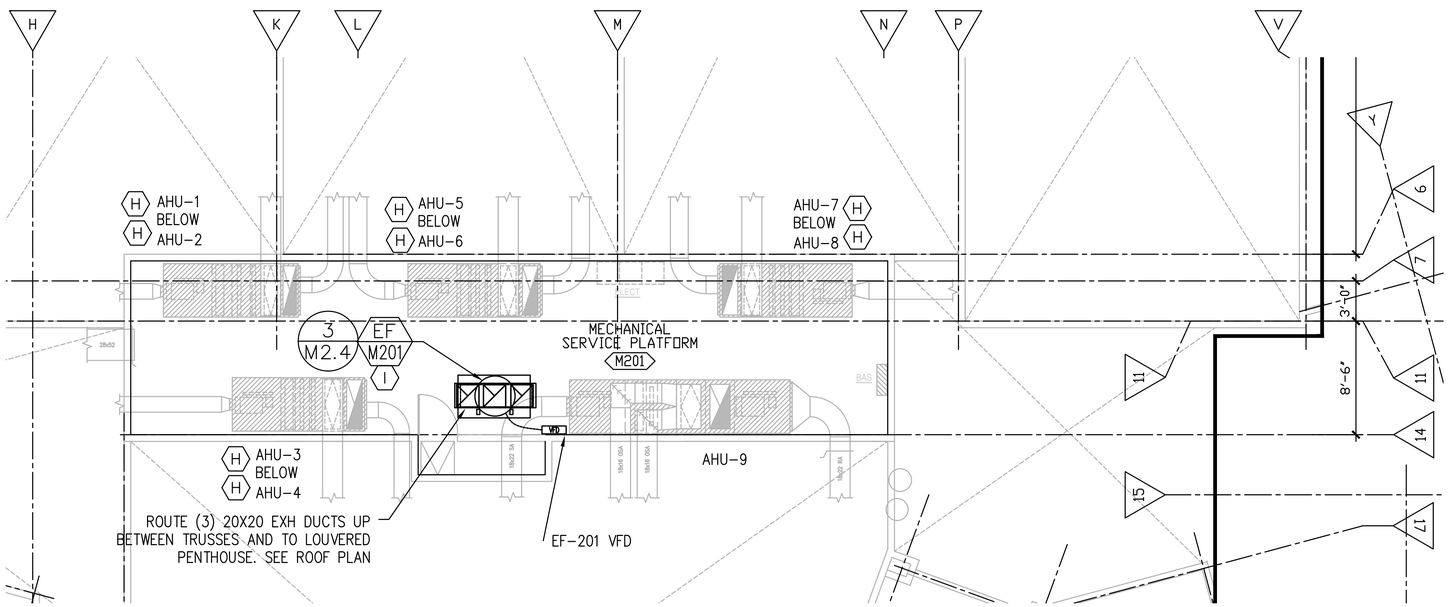

1 M2.4 MECHANICAL MEZZANINE PLAN – AREA A
SCALE: 1/8"=1'-0"

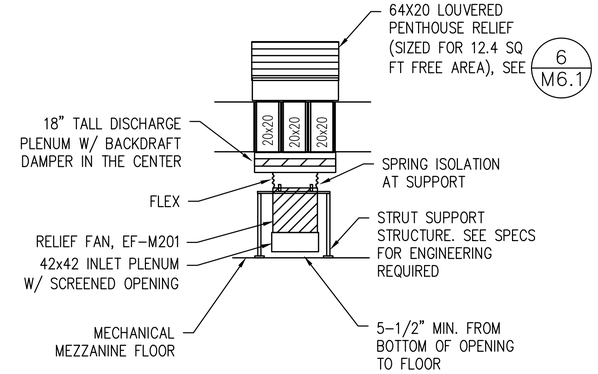

3 M2.4 EF/M201 SECTION
SCALE: 1/8"=1'-0"

MECHANICAL GENERAL NOTES:

- ENSURE ALL STRAINERS ARE CLEAN PRIOR TO WATER SIDE BALANCING.
- ALL HEATING AND COOLING COILS, RADIANT HEAT SYSTEMS, AND FIN PIPE UNITS TO BE WATER BALANCED.
- COMPLETE AIR BALANCING IS LIMITED TO AHU-19, PRESSURE RELIEF FANS AND NEW AHU SYSTEMS.

MECHANICAL PLAN NOTES: (X)

A. 30X14 OSA FROM BELOW & UP TO ATTIC SPACE. SEE M2.5.
B. 20x14 OSA FROM BELOW & UP TO ATTIC SPACE. SEE M2.5.
C. 14X22 SA FROM BELOW. TRANSITION TO 18X18 ABOVE FLOOR PENETRATION IN CHASE.
D. 14X18 SA FROM BELOW. TRANSITION TO 16X16 ABOVE FLOOR PENETRATION IN CHASE.
E. RETURN PLENUM FROM BELOW TO FLOOR GRILLE, SEE M2.2 FOR SIZE.
F. 22X22 RELIEF W/ 22X14 RELIEF DUCT UP INTO ATTIC SPACE. SEE SHEET M2.5 FOR CONTINUATION..
G. SEE DETAIL 1/M5.0 FOR CONTROL WORK.
H. CONTROL WORK FOR THIS DEVICE COMPLETED IN PREVIOUS PHASE.
I. SEE DETAIL 3/M5.0 FOR CONTROL WORK.
J. (E) TERMINAL UNIT, CONTROL WORK FOR THIS DEVICE COMPLETED IN PREVIOUS PHASE.
K. CONTROL WORK FOR THIS DEVICE COMPLETED IN PREVIOUS PHASE.
L. BALANCE TO AIRFLOW LISTED.
M. SEE 4/M5.0 FOR CONTROL WORK. REMOVE (E) BALANCING VALVE AND INSTALL FLOW CONTROL VALVE SIZED FOR 3.5 GPM.
N. SENSOR REPLACED IN PREVIOUS CONTROL WORK.

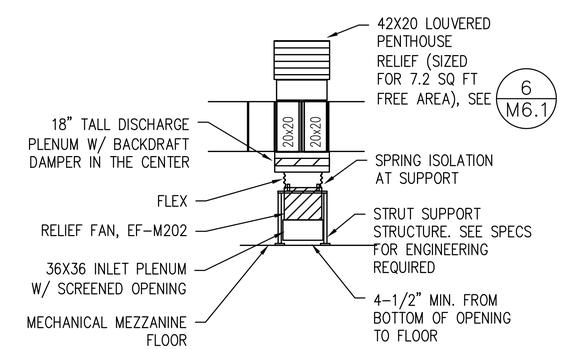

4 M2.4 EF/M202 SECTION
SCALE: 1/8"=1'-0"

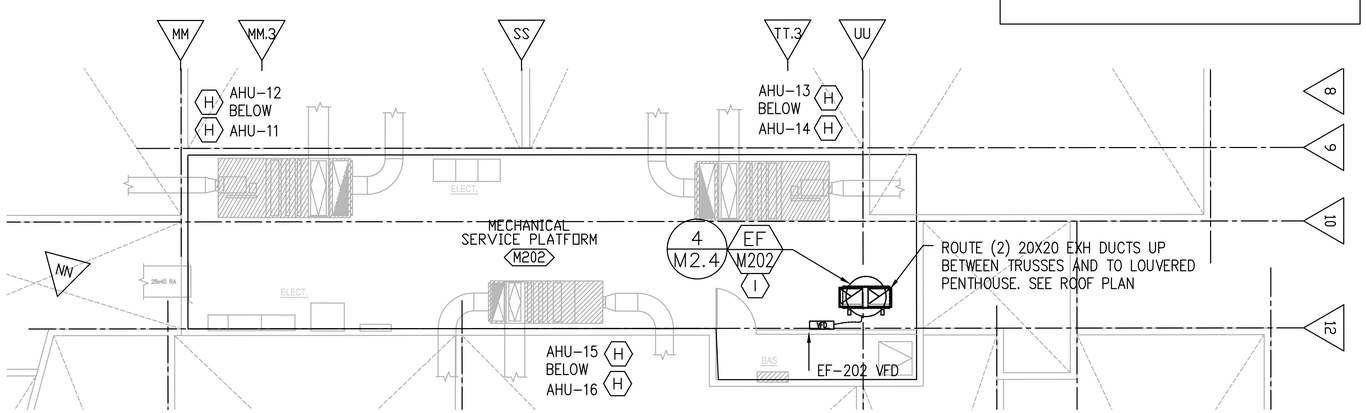

2 M2.4 MECHANICAL MEZZANINE PLAN – AREA B
SCALE: 1/8"=1'-0"

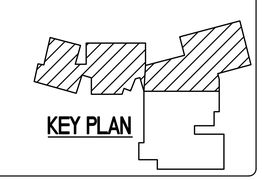

REGISTERED PROFESSIONAL ENGINEER
17884
JULY 25, 1985
SCOTT W. MILLER
EXPIRES: 31DEC24

Date: 11/17/2022
Proj No: 10172
Drawn By: ARB
Chkd By: SM
DSGN By: SM
Acad File:

ASHLAND SD BELLVIEW ELEMENTARY SCHOOL
1070 TOLMAN CREEK RD
ASHLAND OREGON

MECHANICAL MEZZANINE PLANS – AREA A & B

MFIA INC.

Consulting Engineers
2007 S.E. Ash St.
Portland, OR 97214
PHN: (503) 234-0548
FAX: (503) 234-0677
WWW.MFIA-ENG.COM

SHEET
M2.4

MECHANICAL GENERAL NOTES:

- ENSURE ALL STRAINERS ARE CLEAN PRIOR TO WATER SIDE BALANCING.
- ALL HEATING AND COOLING COILS, RADIANT HEAT SYSTEMS, AND FIN PIPE UNITS TO BE WATER BALANCED.
- COMPLETE AIR BALANCING IS LIMITED TO AHU-19, PRESSURE RELIEF FANS AND NEW AHU SYSTEMS.

MECHANICAL PLAN NOTES: (X)

A. 30X14 OSA FROM BELOW & UP TO ATTIC SPACE. SEE M2.5.
B. 20x14 OSA FROM BELOW & UP TO ATTIC SPACE. SEE M2.5.
C. 14X22 SA FROM BELOW. TRANSITION TO 18X18 ABOVE FLOOR PENETRATION IN CHASE.
D. 14X18 SA FROM BELOW. TRANSITION TO 16X16 ABOVE FLOOR PENETRATION IN CHASE.
E. RETURN PLENUM FROM BELOW TO FLOOR GRILLE, SEE M2.2 FOR SIZE.
F. 22X22 RELIEF W/ 22X14 RELIEF DUCT UP INTO ATTIC SPACE. SEE SHEET M2.5 FOR CONTINUATION..
G. SEE DETAIL 1/M5.0 FOR CONTROL WORK.
H. CONTROL WORK FOR THIS DEVICE COMPLETED IN PREVIOUS PHASE.
I. SEE DETAIL 3/M5.0 FOR CONTROL WORK.
J. (E) TERMINAL UNIT, CONTROL WORK FOR THIS DEVICE COMPLETED IN PREVIOUS PHASE.
K. CONTROL WORK FOR THIS DEVICE COMPLETED IN PREVIOUS PHASE.
L. BALANCE TO AIRFLOW LISTED.
M. SEE 4/M5.0 FOR CONTROL WORK. REMOVE (E) BALANCING VALVE AND INSTALL FLOW CONTROL VALVE SIZED FOR 3.5 GPM.
N. SENSOR REPLACED IN PREVIOUS CONTROL WORK.

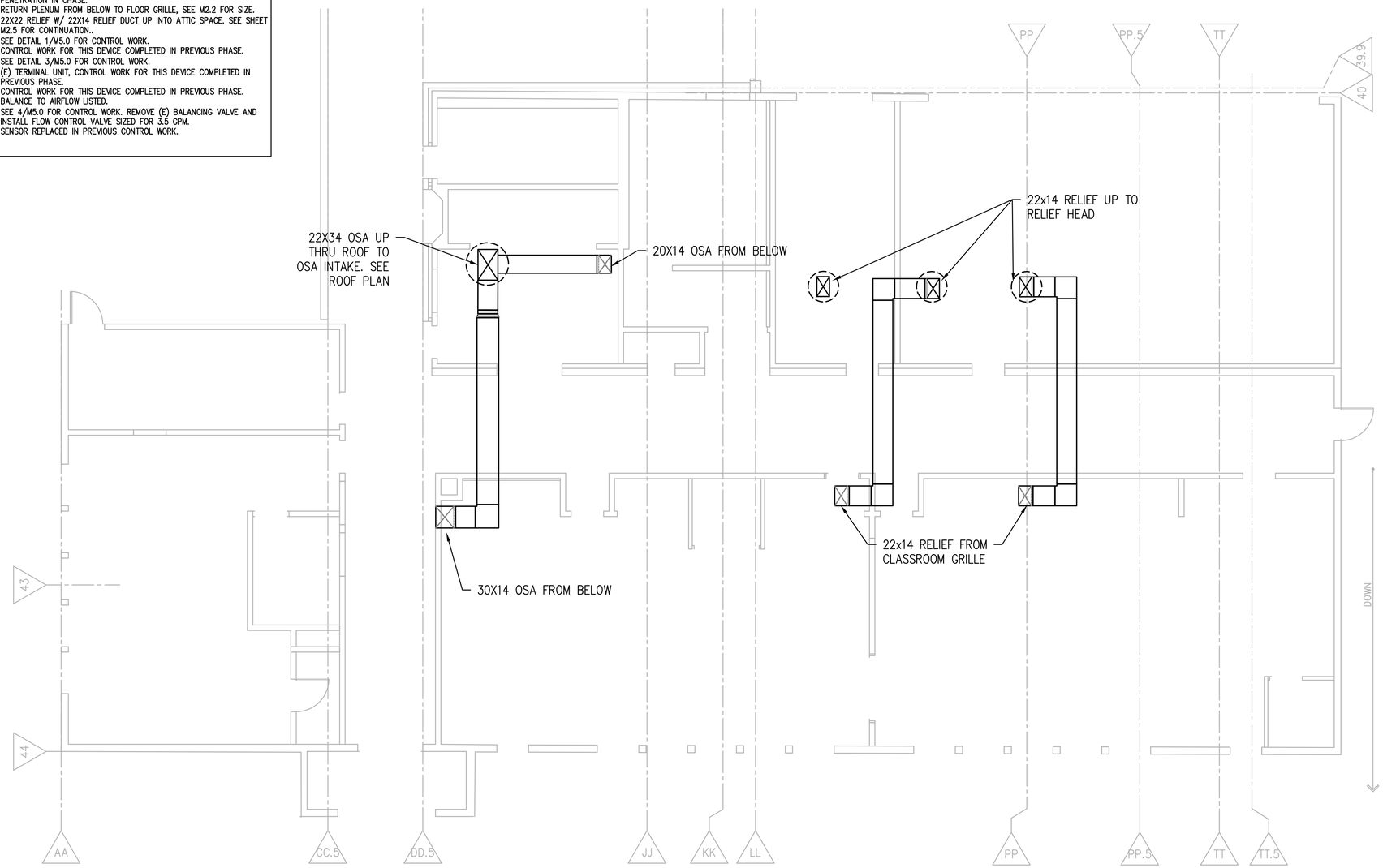

1 / M2.4 MECHANICAL ATTIC PLAN – AREA C
SCALE: 1/8"=1'-0"

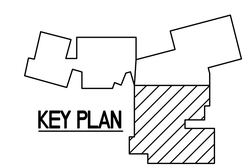

REGISTERED PROFESSIONAL ENGINEER 17884 OREGON JULY 25, 1985 SCOTT W. MILLER
EXPIRES: 31DEC24

Date: 11/17/2022
Proj No: 10172
Drawn By: ARB
Chkd By: SM
DSGN By: SM
Acad File:

ASHLAND SD BELLVIEW ELEMENTARY SCHOOL
1070 TOLMAN CREEK RD
ASHLAND OREGON

MECHANICAL ATTIC PLANS – AREA C

MFIA INC.

Consulting Engineers
2007 S.E. Ash St.
Portland, OR 97214
PHN: (503) 234-0548
FAX: (503) 234-0677
WWW.MFIA-ENG.COM

SHEET
M2.5

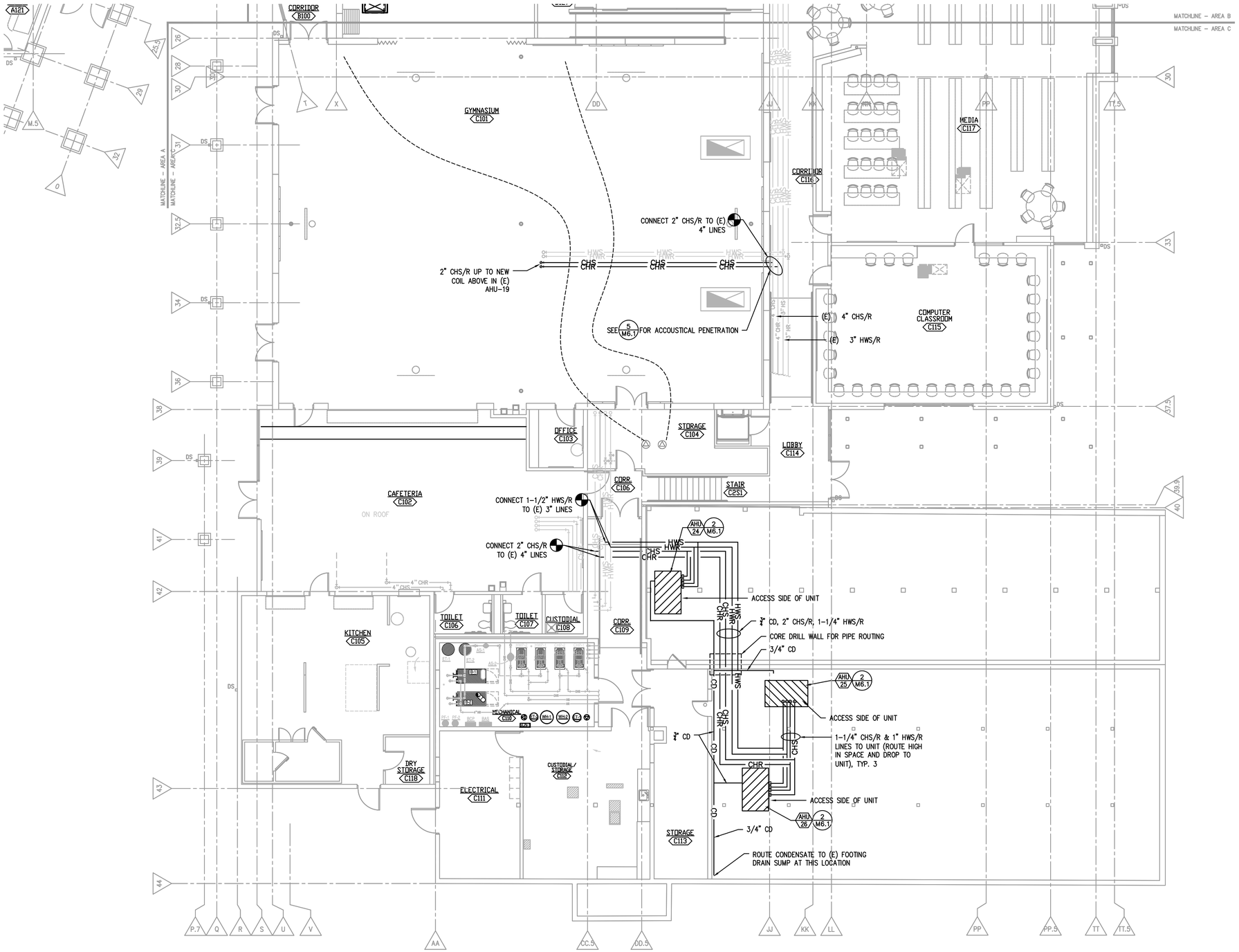

1 / M3.2 MECHANICAL PIPING PLAN – 1ST FLR AREA C

SCALE: 1/8"=1'-0"

KEY PLAN

REGISTERED PROFESSIONAL ENGINEER 17884 OREGON JULY 25, 1985 SCOTT W. MILLER

EXPIRES: 31DEC24

Date: 11/17/2022
Proj No: 10172
Drawn By: ARB
Chkd By: SM
DSGN By: SM
Acad File:

ASHLAND SD BELLVIEW ELEMENTARY SCHOOL
1070 TOLMAN CREEK RD
ASHLAND OREGON

MECHANICAL PIPING PLAN – 1ST FLR AREA C

MFIA INC.

Consulting Engineers
2007 S.E. Ash St.
Portland, OR 97214
PHN: (503) 234-0548
FAX: (503) 234-0677
WWW.MFIA-ENG.COM

SHEET
M3.2

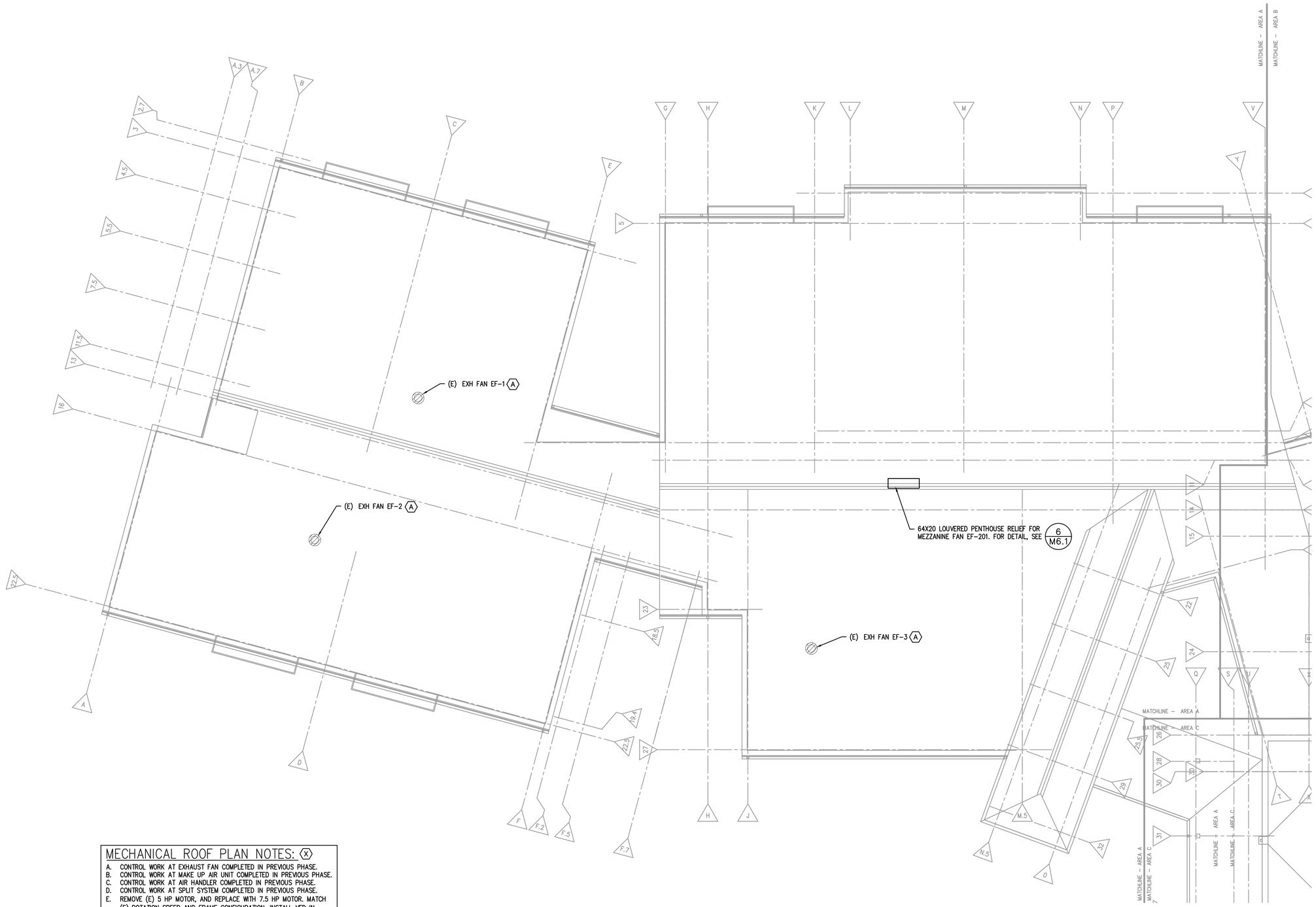

MECHANICAL ROOF PLAN NOTES: (X)

A. CONTROL WORK AT EXHAUST FAN COMPLETED IN PREVIOUS PHASE.
B. CONTROL WORK AT MAKE UP AIR UNIT COMPLETED IN PREVIOUS PHASE.
C. CONTROL WORK AT AIR HANDLER COMPLETED IN PREVIOUS PHASE.
D. CONTROL WORK AT SPLIT SYSTEM COMPLETED IN PREVIOUS PHASE.
E. REMOVE (E) 5 HP MOTOR, AND REPLACE WITH 7.5 HP MOTOR. MATCH (E) ROTATION SPEED AND FRAME CONFIGURATION. INSTALL VFD IN EXISTING MOTOR CONTROL CABINET OR A NEW TEMPERATURE CONTROLLED CABINET ON THE NORTH SIDE OF THE UNIT. SIZE VFD FOR NEW 7.5 HP MOTOR (14.5 FLA). IF INSTALLED IN EXISTING MOTOR CONTROL CABINET VFD DOES NOT NEED NEW DISCONNECT; RETAIN EXISTING. OTHERWISE PROVIDE AS SPECIFIED. SEE ELECTRICAL DRAWINGS FOR ADDITIONAL INFORMATION.

1 / M4.0 MECHANICAL ROOF PLAN – AREA A
SCALE: 1/8"=1'-0"

KEY PLAN

REGISTERED PROFESSIONAL ENGINEER 17884 OREGON JULY 25, 1995 SCOTT W. MILLER
EXPIRES: 31DEC24

Date: 11/17/2022
Proj No: 10172
Drawn By: ARB
Chkd By: SM
DSGN By: SM
Acad File:

ASHLAND SD BELLVIEW ELEMENTARY SCHOOL
1070 TOLMAN CREEK RD
ASHLAND OREGON

MECHANICAL ROOF PLAN – AREA A

MFIA INC.

Consulting Engineers
2007 S.E. Ash St.
Portland, OR 97214
PHN: (503) 234-0548
FAX: (503) 234-0677
WWW.MFIA-ENG.COM

SHEET
M4.0

MECHANICAL ROOF PLAN NOTES: (X)

A. CONTROL WORK AT EXHAUST FAN COMPLETED IN PREVIOUS PHASE.
B. CONTROL WORK AT MAKE UP AIR UNIT COMPLETED IN PREVIOUS PHASE.
C. CONTROL WORK AT AIR HANDLER COMPLETED IN PREVIOUS PHASE.
D. CONTROL WORK AT SPLIT SYSTEM COMPLETED IN PREVIOUS PHASE.
E. REMOVE (E) 5 HP MOTOR, AND REPLACE WITH 7.5 HP MOTOR. MATCH (E) ROTATION SPEED AND FRAME CONFIGURATION. INSTALL VFD IN EXISTING MOTOR CONTROL CABINET OR A NEW TEMPERATURE CONTROLLED CABINET ON THE NORTH SIDE OF THE UNIT. SIZE VFD FOR NEW 7.5 HP MOTOR (14.5 FLA). IF INSTALLED IN EXISTING MOTOR CONTROL CABINET VFD DOES NOT NEED NEW DISCONNECT; RETAIN EXISTING. OTHERWISE PROVIDE AS SPECIFIED. SEE ELECTRICAL DRAWINGS FOR ADDITIONAL INFORMATION.

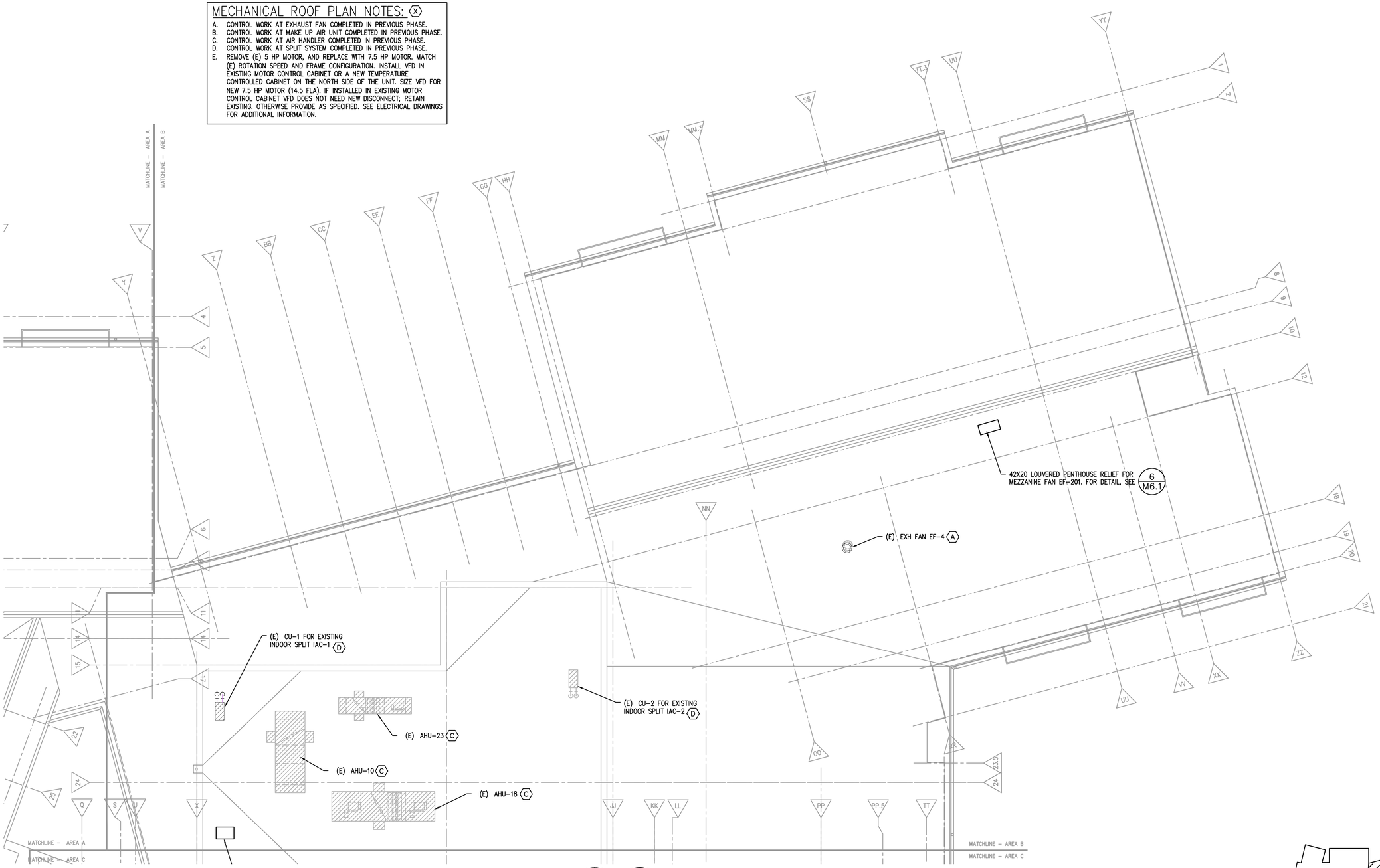

1/M4.1 MECHANICAL ROOF PLAN – AREA B
SCALE: 1/8"=1'-0"

KEY PLAN

REGISTERED PROFESSIONAL ENGINEER 17884 OREGON JULY 25, 1985 SCOTT W. MILLER
EXPIRES: 31DEC24

Date: 11/17/2022
Proj No: 10172
Drawn By: ARB
Chkd By: SM
DSGN By: SM
Acad File:

ASHLAND SD BELLVIEW ELEMENTARY SCHOOL
1070 TOLMAN CREEK RD
ASHLAND OREGON

MECHANICAL ROOF PLAN – AREA B

MFIA INC.

Consulting Engineers
2007 S.E. Ash St.
Portland, OR 97214
PHN: (503) 234-0548
FAX: (503) 234-0677
WWW.MFIA-ENG.COM

SHEET
M4.1

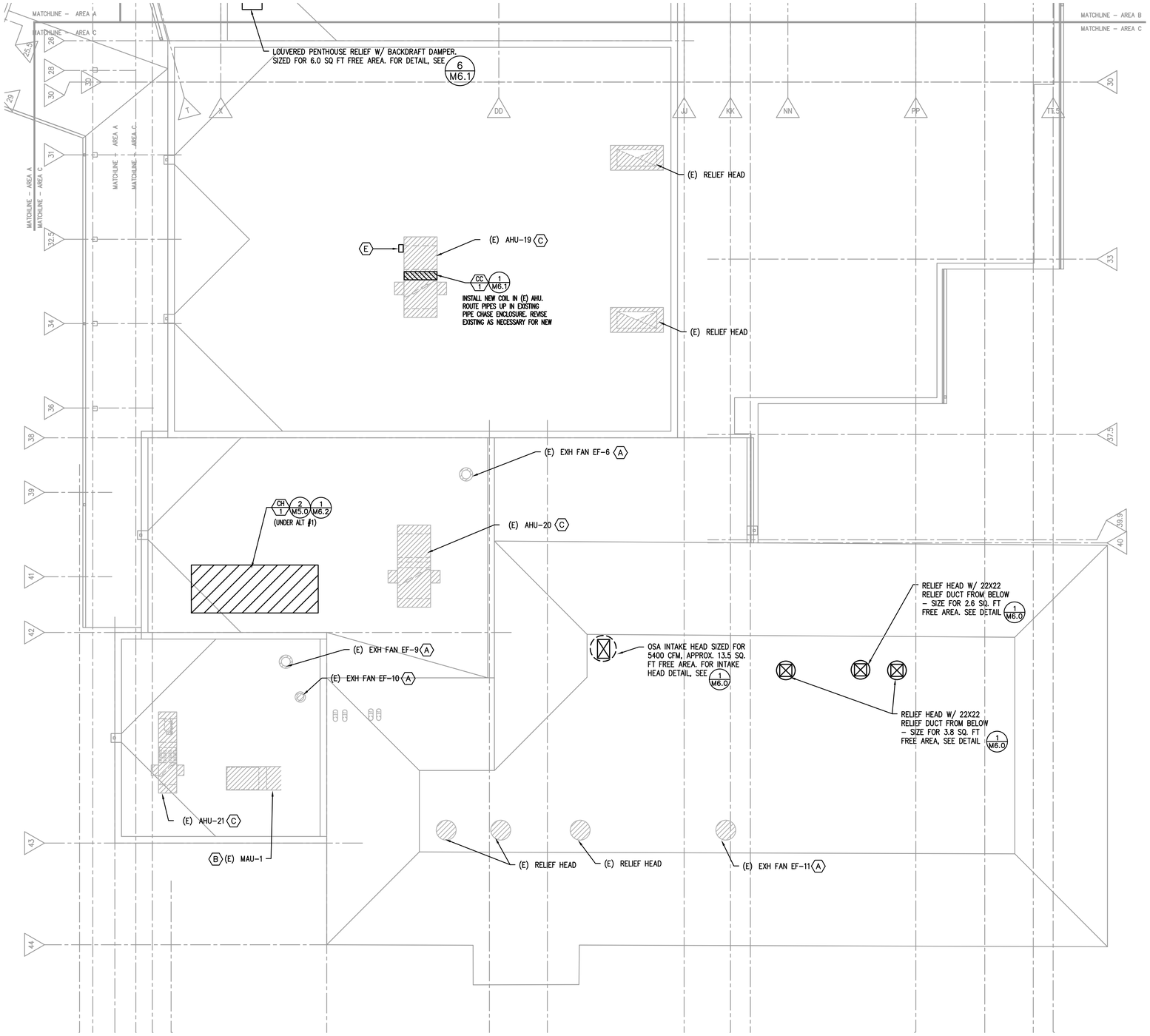

1/M4.2 MECHANICAL ROOF PLAN – AREA C
SCALE: 1/8"=1'-0"

MECHANICAL ROOF PLAN NOTES: X

A. CONTROL WORK AT EXHAUST FAN COMPLETED IN PREVIOUS PHASE.
B. CONTROL WORK AT MAKE UP AIR UNIT COMPLETED IN PREVIOUS PHASE.
C. CONTROL WORK AT AIR HANDLER COMPLETED IN PREVIOUS PHASE.
D. CONTROL WORK AT SPLIT SYSTEM COMPLETED IN PREVIOUS PHASE.
E. REMOVE (E) 5 HP MOTOR, AND REPLACE WITH 7.5 HP MOTOR. MATCH (E) ROTATION SPEED AND FRAME CONFIGURATION. INSTALL VFD IN EXISTING MOTOR CONTROL CABINET OR A NEW TEMPERATURE CONTROLLED CABINET ON THE NORTH SIDE OF THE UNIT. SIZE VFD FOR NEW 7.5 HP MOTOR (14.5 FLA). IF INSTALLED IN EXISTING MOTOR CONTROL CABINET VFD DOES NOT NEED NEW DISCONNECT; RETAIN EXISTING. OTHERWISE PROVIDE AS SPECIFIED. SEE ELECTRICAL DRAWINGS FOR ADDITIONAL INFORMATION.

KEY PLAN

REGISTERED PROFESSIONAL ENGINEER 17884 OREGON JULY 25, 1985 SCOTT W. MILLER
EXPIRES: 31DEC24

Date: 11/17/2022
Proj No: 10172
Drawn By: ARB
Chkd By: SM
DSGN By: SM
Acad File:

ASHLAND SD BELLVIEW ELEMENTARY SCHOOL
1070 TOLMAN CREEK RD
ASHLAND OREGON

MECHANICAL ROOF PLAN – AREA C

MFIA INC.

Consulting Engineers
2007 S.E. Ash St.
Portland, OR 97214
PHN: (503) 234-0548
FAX: (503) 234-0677
WWW.MFIA-ENG.COM

SHEET
M4.2

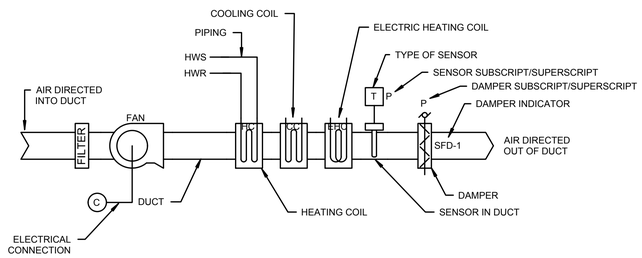

EQUIPMENT ABBREVIATIONS:

P	PUMP
SP	PUMP
BP	BOOSTER PUMP
HWP	HEATING WATER PUMP
CHP	CHILLED WATER PUMP
(E)	EXISTING
CWP	CONDENSING WATER PUMP
CSP	COOLING TOWER SUMP PUMP
HWRP	DOMESTIC HOT WATER RECIRCULATION
VFD	VARIABLE FREQUENCY DRIVE
CT	CONTACTOR
CC	CONTROL COMPRESSOR
CH	CHILLER
B	BOILER
EF	EXHAUST FAN
RF	RETRUN / RELIEF FAN
AH	AIR HANDLER
VAV	VARIABLE AIR VOLUME DAMPER BOX
AD	AREA DAMPER
SD	SMOKE DAMPER
SFD	FIRE SMOKE COMBINATION DAMPER
H	HUMIDIFIER
V	VALVE
WH	WATER HEATER
BAS	BUILDING AUTOMATION SYSTEM

PLUMBING ABBREVIATIONS:

HWS	HEATING WATER SUPPLY
HWR	HEATING WATER RETURN
HW	DOMESTIC HOT WATER
CW	DOMESTIC COLD WATER
GPM	GALLONS PER MINUTE
DB	DOUBLE VALVE OPERATOR

AIR FLOW ABBREVIATIONS:

OSA	OUTSIDE AIR
RA	RETURN AIR
SA	SUPPLY AIR
EXH	EXHAUST AIR

LEGEND

T	SPACE TEMPERATURE SENSOR
P	SPACE PRESSURE SENSOR
H	SPACE HUMIDITY SENSOR
DP	DIFFERENTIAL PRESSURE SENSOR
H	HUMIDITY SENSOR
T	TEMPERATURE SENSOR
LL	TEMPERATURE LOW LIMIT SENSOR
FL	FLUID LEVEL SENSOR
AQ	AIR QUALITY SENSOR
OS	OCCUPANCY SENSOR (SEE DIV 26)
CT	CURRENT TRANSFORMER
M	WATER METER
VFD	VARIABLE FREQUENCY DRIVE
C	CONTACTOR/STARTER
MCC	MOTOR CONTROL CENTER
SD	SMOKE DETECTOR
F	FLOW SENSOR (WATER OR AIR)
P	DUCT PRESSURE SENSOR
CO2	CO2 SENSOR @ 48" AFF UNLESS NOTED OTHERWISE
FS	FLOW SWITCH
	TIMER SWITCH
	CAPPED LINE
	PUMP
	FLOW DIRECTION INDICATOR
	MULTI VALVE
	3-WAY VALVE
	2-WAY VALVE
(N)	INDICATES NEW DEVICE ON EXISTING SYSTEM
(E)	EXISTING DEVICE TO BE REUSED.

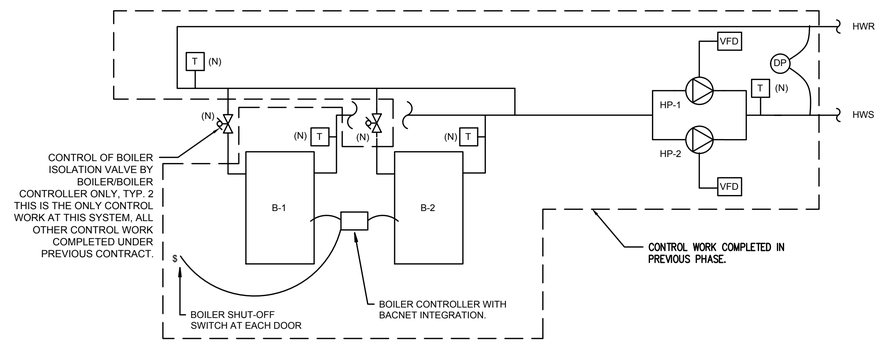

NOTE:
ALL DEVICES ARE EXISTING UNLESS NOTED OTHERWISE

1 M5.0 BOILER SYSTEM CONTROLS
SCALE: SCHEMATIC

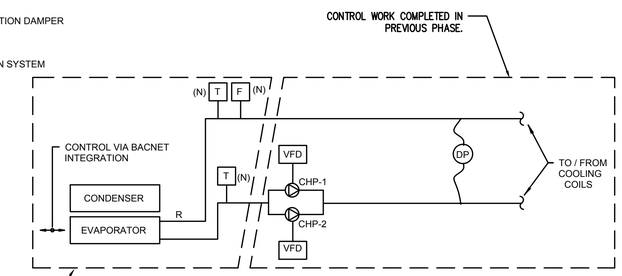

NOTE:
ALL DEVICES ARE EXISTING UNLESS NOTED OTHERWISE

2 M5.0 CHILLER CONTROLS
SCALE: SCHEMATIC

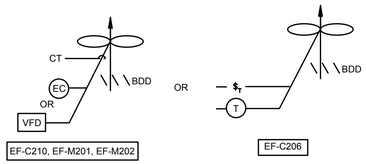

ALL CONTROL DEVICES ARE NEW UNLESS OTHERWISE NOTED.

3 M5.0 EXHAUST FAN CONTROL DIAGRAM
SCALE: SCHEMATIC

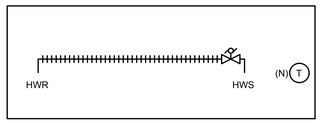

NOTE:
ALL DEVICES ARE EXISTING UNLESS NOTED OTHERWISE

4 M5.0 FIN PIPE CONTROL DIAGRAM
SCALE: SCHEMATIC

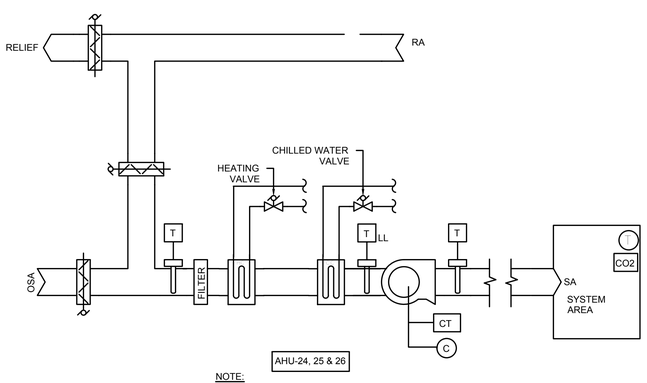

NOTE:
ALL DEVICES ARE NEW AS THESE ARE ALL NEW AIR HANLDERS

5 M5.0 NEW AIR HANDLER CONTROL DIAGRAM
SCALE: SCHEMATIC

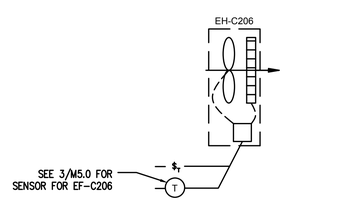

ALL CONTROL DEVICES ARE NEW UNLESS OTHERWISE NOTED.

6 M5.0 ELECTRIC FAN OPERATION
SCALE: SCHEMATIC

CONTROLS INSTALLED IN PREVIOUS PHASE

CONTROLS FOR BOILER SYSTEM, SEE 1/M5.0

POINT DESCRIPTION	INPUT DIGITAL	INPUT ANALOG	OUTPUT DIGITAL	OUTPUT ANALOG	ALARM
HTG SYS ENABLE (1)			X		
HWS RESET (1)				X	
HTG SYS ALARM/FAULT (1)	X				X
HW PUMP COMMAND VFD (TYP OF 2)			X		
HW PUMP STATUS VFD (TYP OF 2)		X			X
HW PUMP SPEED VFD (TYP OF 2)				X	
BOILER SUPPLY WATER TEMPERATURE (TYP. OF 2)		X			
SYSTEM SUPPLY WATER TEMPERATURE		X			
SYSTEM RETURN WATER TEMPERATURE		X			
SYSTEM DIFFERENTIAL PRESSURE		X			
BOILER SHUT-OFF SWITCH	X				X
BOILER ISOLATION VALVE (TYP. OF 2) NOTE 1			X		

NOTES:
1. VALUES TO / FROM BOILER CONTROLLER. INTEGRATE VIA BACNET CONNECTION.

CONTROLS INSTALLED IN PREVIOUS PHASE

CONTROLS FOR CHILLER, SEE 2/M5.0

POINT DESCRIPTION	INPUT DIGITAL	INPUT ANALOG	OUTPUT DIGITAL	OUTPUT ANALOG	ALARM
CHILLER ENABLE/DISABLE (1)					
CHILLER RESET SIGNAL (1)		X			
CHILLED WATER PUMP START/STOP (TYP. 2)			X		
CHILLED WATER PUMP STATUS (TYP. 2)	X				X
CHILLED WATER PUMP SPEED (TYP. 2)				X	
CHILLER ALARM (1)		X			X
CHILLED SUPPLY WATER TEMPERATURE (1)		X			
CHILLED RETURN WATER TEMPERATURE (1)		X			
SYSTEM DIFFERENTIAL PRESSURE		X			
CHILLED WATER FLOW		X			

NOTES:
1. VIA BACNET INTEGRATION.

CONTROLS FOR EXHAUST FANS, SEE 3/M5.0

POINT DESCRIPTION	INPUT DIGITAL	INPUT ANALOG	OUTPUT DIGITAL	OUTPUT ANALOG	ALARM
FAN MOTOR STATUS (1)	X				X
START/STOP TYP OF ALL			X		
SPACE TEMP (EF-C206 ONLY)		X			
EXHAUST FAN FAN SPEED (EF-C210, M201, M202)				X	

NOTES:
1. (CURRENT SENSOR OR VFD) (TYP ALL)

CONTROLS FOR FIN PIPE, SEE 4/M5.0

POINT DESCRIPTION	INPUT DIGITAL	INPUT ANALOG	OUTPUT DIGITAL	OUTPUT ANALOG	ALARM
SPACE TEMP (SEE SENSOR FOR ASSOCIATED AHU)		X			
VALVE POSITION				X	

CONTROLS FOR AHU-24, 25 & 26, SEE 5/M5.0

POINT DESCRIPTION	INPUT DIGITAL	INPUT ANALOG	OUTPUT DIGITAL	OUTPUT ANALOG	ALARM
SUPPLY FAN START/STOP			X		
SUPPLY FAN STATUS	X				X
DISCHARGE AIR TEMPERATURE		X			
MIXED AIR TEMPERATURE		X			
RETURN AIR TEMP		X			
SPACE CO2 LEVEL		X			X
OUTSIDE DAMPER POSITION				X	
RA DAMPER POSITION				X	
HEATING VALVE				X	
CHILLED WATER VALVE				X	

CONTROLS FOR ELECTRIC FAN, SEE 6/M5.0

POINT DESCRIPTION	INPUT DIGITAL	INPUT ANALOG	OUTPUT DIGITAL	OUTPUT ANALOG	ALARM
HEATER START/STOP			X		

REGISTERED PROFESSIONAL ENGINEER 17884 OREGON JULY 25, 1995 SCOTT W. MILLER
EXPIRES: 31DEC24

Date: 11/17/2022
Proj No: 10172
Drawn By: ARB
Chkd By: SM
DSGN By: SM
Acad File:

ASHLAND SD BELLVIEW ELEMENTARY SCHOOL
1070 TOLMAN CREEK RD
ASHLAND OREGON

MECHANICAL CONTROLS

MFA INC.
Consulting Engineers
2007 S.E. Ash St.
Portland, OR 97214
PHN: (503) 234-0548
FAX: (503) 234-0677
WWW.MFA-ENG.COM

SHEET
M5.0

MECHANICAL LEGEND

- SUPPLY AIR DIFFUSER
- RETURN AIR GRILLE
- EXHAUST AIR GRILLE
- PERFORATED RETURN AIR PANEL
- OR — DIRECTIONAL AIR FLOW
- MANUAL VOLUME DAMPER
- SUPPLY OR OUTSIDE AIR DUCT UP & DOWN
- RETURN AIR DUCT UP & DOWN
- EXHAUST AIR DUCT UP & DOWN
- SUPPLY OR OUTSIDE AIR DUCT UP & DOWN
- RETURN AIR DUCT UP & DOWN
- EXHAUST AIR DUCT UP & DOWN
- VAV TERMINAL UNIT
- VVT TERMINAL UNIT
- (E) — EXISTING
- CONNECT TO EXISTING
- T AC-4 — THERMOSTAT OR TEMP. SENSOR
- ? — NOTE
- XX ? — EQUIPMENT DESIGNATOR
- BALL VALVE
- GATE VALVE
- CHECK VALVE
- BALANCING VALVE
- THERMOMETER
- DIRECTION OF FLOW
- PUMP
- STRAINER
- PRESSURE GAUGE
- T — PETE'S PLUG
- DOUBLE CHECK ASSEMBLY
- PRESSURE REDUCING VALVE
- UNION
- 2-WAY CONTROL VALVE
- 3-WAY CONTROL VALVE
- CAP
- S — SMOKE DETECTOR
- MOTORIZED DAMPER
- FIRE DAMPER
- FIRE / SMOKE DAMPER
- S — SMOKE DAMPER

AFF	ABOVE FINISH FLOOR
AHU	AIR HANDLING UNIT
B.D.	BOTTOM OF DUCT
BHP	BRAKE HORSEPOWER
BTU	BRITISH THERMAL UNITS
CFM	CUBIC FEET PER MINUTE
CONN.	CONNECTION
CONT.	CONTINUATION
CW	DOMESTIC COLD WATER
DB	DRY BULB
DN	DOWN
DIA.	DIAMETER
DIST.	DISTRIBUTION
EA	EXHAUST AIR
EDB	ENTERING DRY BULB TEMPERATURE
EWB	ENTERING WET BULB TEMPERATURE
EWT	ENTERING WATER TEMPERATURE
FF	FINISH FLOOR
FIXT.	FIXTURE
FPM	FEET PER MINUTE
FPS	FEET PER SECOND
FT.	FEET / FOOT
GA.	GAUGE
GPM	GALLONS PER MINUTE
H	HEIGHT
HP	HORSEPOWER
I.D.	INSIDE DIAMETER
IN.	INCHES
L	LENGTH
LBS.	POUNDS
LDB	LEAVING DRY BULB
LWB	LEAVING WET BULB
LWT	LEAVING WATER TEMPERATURE
MAX.	MAXIMUM
MBH	THOUSANDS OF BTUs PER HOUR
MIN.	MINIMUM
NC	NOISE CRITERIA
N.C.	NORMALLY CLOSED
N.I.M.	NOT IN MECHANICAL
NO.	NUMBER
OA	OUTSIDE AIR
PSI	POUNDS PER SQUARE INCH
P/T	PRESSURE / TEMPERATURE
RA	RETURN AIR
RECT.	RECTANGULAR
REQ'D	REQUIRED
SA	SUPPLY AIR
SLSM	SOUND LINED SHEET METAL
S.P.	STATIC PRESSURE
SQ.	SQUARE
TEMP.	TEMPERATURE
TYP.	TYPICAL
W	WIDTH
WB	WET BULB
WPD	WATER PRESSURE DROP
ø	DIAMETER

- CD — CONDENSATE
- G — NATURAL GAS
- RF — REFRIGERANT
- (E) EXISTING
- (D) DEMOLISH
- NEW WORK
- HWS — (HWS) HEATING WATER SUPPLY
- HWR — (HWR) HEATING WATER RETURN
- CHS — (CHS) CHILLED WATER SUPPLY
- CHR — (CHR) CHILLED WATER RETURN

SEISMIC BRACING

- LATERAL BRACING
- LONGITUDINAL BRACING
- LONGITUDINAL & LATERAL BRACING

AIR HANDLER UNIT SCHEDULE

MARK	AHU	AHU	AHU
NUMBER	24	25	26
SUPPLY FAN			
CFM	1800	1800	1800
MIN. OUTSIDE AIR (CFM)	545	564	546
TOTAL STATIC PRESS (IN.WC)	3	3	3
EXTERNAL SUCTION STATIC PRESS (IN.WC)	0.3	0.3	0.3
EXTERNAL DISCHARGE STATIC PRESS (IN.WC)	0.4	0.4	0.4
BHP	1.418	1.418	1.418
MOTOR HP	2	2	2
RPM	DIRECT DRIVE	DIRECT DRIVE	DIRECT DRIVE
WHEEL TYPE	AIR FOIL	AIR FOIL	AIR FOIL
WHEE DIA. (IN.)	24.5	24.5	24.5
VFD/EC MOTOR	EC	EC	EC
SMOKE DETECTOR	YES	YES	YES
CHILLED WATER COIL			
TOTAL /SENSIBLE CAPACITY (MBH)	55.16/42	55.16/42	55.16/42
FLOW (GPM) 25% GLYCOL	10.7	10.7	10.7
PRESS. DROP (FT WG)	0.2	0.2	0.2
EWT/LWT	45/58	45/58	45/58
EAT Db/Wb	81/63.5	81/63.5	81/63.5
LAT DB/WB	57.32/57.12	57.32/57.12	57.32/57.12
VALVE TYPE	2-WAY	2-WAY	2-WAY
HEATING WATER COIL			
CAPACITY (MIN)	78 MBH	78 MBH	78 MBH
FLOW (GPM)	7.5	7.5	7.5
PRESS. DROP (FT WC)	0.08	0.08	0.08
EWT/LWT	140/120	140/120	140/120
ENTERING / LEAVING AIR TEMP	58/95	58/95	58/95
VALVE TYPE	2-WAY	2-WAY	2-WAY
VOLTAGE/PHASE	208/3	208/3	208/3
FILTER TYPE	MERV 8 & 13	MERV 8 & 13	MERV 8 & 13
BASIS OF DESIGN	TRANE UCCA	TRANE UCCA	TRANE UCCA
OPERATIING WEIGHT	1115 LBS	1115 LBS	1115 LBS

CHILLED WATER PERFORMANCE SHALL BE PROVIDED WITH 25% PROPYLENE GLYCOL FLUID. UNITS SHALL PROVIDE SPECIFIED PERFORMANCE AT 2000 FT. ELEVATION.
HEATING COILS ARE 0% GLYCOL

PUMP SCHEDULE

MARK NUMBER	CHP 1	CHP 2
LOCATION	MECHANICAL ROOM	
SERVICE	CHILLED WATER	
FLOW RATE (GPM)	207	
HEAD (FT)	85	
PROPYLENE GLYCOL	25%	
PUMP POWER (BHP)	5.85	
MOTOR HP	7.5	
MOTOR SPEED (RPM)	1750	
EFF. %	74%	
VFD/EC MOTOR	(E) VFD TO BE RE-USED	
VOLTAGE/PHASE	480/3	
SHAFT GROUNDING	YES	
DESIGN WEIGHT (LBS)	350	
BASIS OF DESIGN	B&G 1510-2.5BB	

NOTES:
1. NEW PUMPS REPLACE (E) B&G 1510-2BC WITH 7.5 HP MOTORS.
2. RETAIN FULL SIZE IMPELLER IN NEW PUMPS.

CHILLED WATER COIL

MARK NUMBER	CC 1
TOTAL CFM	5400
TO FIT UNIT	AHU-19
MAX FACE VELOCITY (FPM)	500 FPM
ENT. AIR TEMP (DEG F) DB/WB	80/62
LVG AIR TEMP (DEG F)	56/53
TOTAL (MBH)	144.7
GPM FOR 45/58 DEG CHS/R	28.8
MAX AIR PRESS LOSS (IN H20)	0.3

NOTES:
1. CHILLED WATER PERFORMANCE SHALL BE PROVIDED WITH 25% PROPYLENE GLYCOL FLUID.
2. AHU-19 IS AN INNOVENT UNIT. COIL SIZE IS APPROX. 45" LONG AND 36" TALL. CONFIRM DIMENSIONS PRIOR TO SUBMITTAL. SELECTION SHALL PROVIDE PERFORMANCE AT 2000 FT. ELEVATION.

CHILLER

MARK	CH
NUMBER	1
TYPE	AIR COOLED
MIN. FLOW (GPM)	172
DESIGN FLOW (GPM)	296
TOTAL PRESSURE DROP H20 (MAX)	9 FT
ENT/LVG WATER TEMPS	58/45
PROPYLENE GLYCOL	25%
COOLING CAPACITY (TON)	134 MIN.
EER (MIN.)	10.38
IPLV (MIN.)	16.4
COMPRESSOR TYPE	SCROLL
ENTERING AIR TEMPERATURE	95
MINIMUM CAPACITY	25%
CAPACITY CONTROL STEPS	4 MIN.
REFRIGERANT	R410A
VOLTAGE/PHASE	208/3
SINGLE POINT ELECTRICAL	YES
MCA	634 A
MOP	700 A
OPERATING WEIGHT	7800 LBS
BASIS OF DESIGN	TRANE CGAM
SOUND PRESSURE (dBA)	66
SOUND POWER (dBA)	92

EXISTING AIR HANDLING UNIT SCHEDULE

UNIT TAG	COOLING COIL FLOW RATE (2)	HEATING COIL FLOW RATE (2)
AHU-1	7.2	4.4
AHU-2	7.2	4.4
AHU-3	7.6	4.5
AHU-4	8.2	4.7
AHU-5	7.2	4.4
AHU-6	7.6	4.5
AHU-7	7.6	4.5
AHU-8	8.2	4.7
AHU-9	15	4
AHU-10	32	8
AHU-11	8.2	4.7
AHU-12	7.6	4.5
AHU-13	7.6	4.5
AHU-14	8.2	4.7
AHU-15	6.5	3.7
AHU-16	5.5	3
AHU-17	DOESN'T EXIST	
AHU-18	26	8
AHU-19	(1) 14.6	11
AHU-20	27	12
AHU-21	7	1
AHU-22	16.9	2
AHU-23	7	4

NOTES:
1. NEW VALVE, 3-WAY CONFIGURATION.
2. COIL HAS A FLOW CONTROL VALVE, VERIFY FLOW VALUE.

EXISTING VAV BOX SCHEDULE

VAV MARK NO.	GPM
TU 9.1	1.2
TU 9.2	2.0
TU 9.3	0.7
TU 9.4	0.9
TU 9.5	0.4
TU 9.6	0.9
TU 9.7	0.9
	7.0
TU 10.1	3.5
TU 10.2	3.4
	6.9
TU 18.1	1.4
TU 18.2	0.6
TU 18.3	1.7
TU 18.4	2.4
TU 18.5	2.7
TU 18.6	2.3
TU 18.7	5.0
	16.1
TU 22.1	2.8
TU 22.2	2.1
TU 22.3	0.5
	5.4

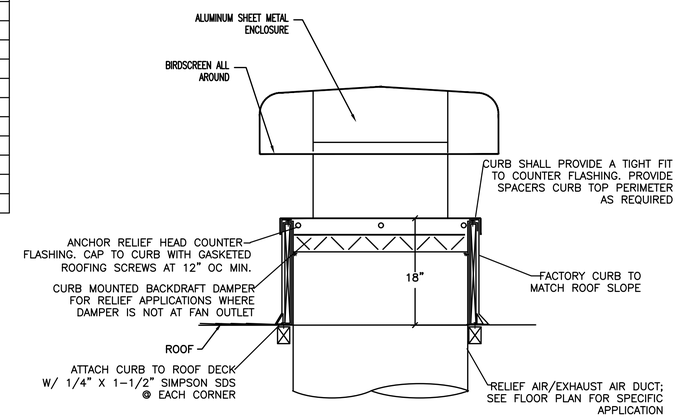

1 / M6.0 INTAKE/RELIEF/EXHAUST HEAD
SCALE: DETAIL

EXHAUST FANS															
Mark	FAN TYPE	GREENHECK Model	Wheel Diameter (in.)	CFM	ESP (in. wg)	Fan Speed (RPM)	Tip Speed (ft/min)	Operating Power (hp)	dBA	Inlet Sones	Motor Size (hp)	Voltage	Phase	EC Motor of VFD	Total Weight (lb)
EF-C210	PROPELLER	AER-E20C-620-VG	20	2,000	0.35	1083	5,708	0.24	67	14.7	0.5	208	1	VariGreen	80
EF-M201	MIXED FLOW UPBLAST	QEID-22	22	8,675	0.375	1170	8,270	1.82	71	19.1	2	208	3	VFD	400
EF-M202	MIXED FLOW UPBLAST	QEID-16	16	5,000	0.375	1770	9,268	1.19	77	26	1.5	208	3	VFD	200

NOTE: UNITS SHALL PROVIDE SPECIFIED PERFORMANCE AT 2000 FT ELEVATION

VENTILATION AIR SCHEDULE - BELLVIEW ES

ROOM NUMBER AND NAME	AREA (SQ. FT.)	OCCUPANT LOAD (#/1000 SQ. FT.)	NUMBER OF OCCUPANTS	OUTSIDE AIR REQUIREMENT (CFM/P)	OUTSIDE AIR REQUIREMENT (CFM/SQ FT.)	OUTSIDE AIR REQUIRED (CFM)		ZONE OSA (CFM)	SUPPLY AIR (CFM)	PRIMARY OSA FRACTION	RETURN AIR (CFM)	EXHAUST AIR (CFM)	Zone Ventilation Efficiency	Corrected OSA CFM	AIR SYSTEMS
	Az		**Pz**	**Rp**	**Ra**	**Vbz**	**Ez**	**Voz**	**Vpz**	**Zp**			**Evz**		
C205 CLASSROOM	946	35	34	10	0.12	454	1.0	454	1800	0.25	1800	0	0.83	545.08	AHU-24
C206 SCIENCE CLASSROOM	996	35	35	10	0.12	470	1.0	470	1800	0.26	1800	0	0.82	564.31	AHU-25
C207 ARTCLASSROOM	951	35	34	10	0.12	454	1.0	454	1800	0.25	1800	0	0.83	545.80	AHU-26
TOTAL	**2893**		**103**			**1377**		**454**	**5400**		**5400**	**0**	**0.83**	**1655**	**AHU-24/25/26**

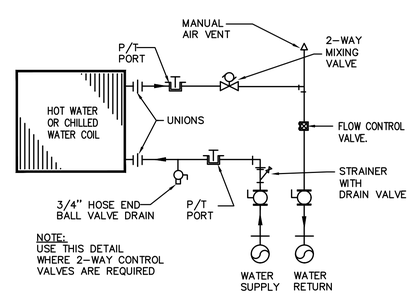

2-WAY CONTROL VALVE

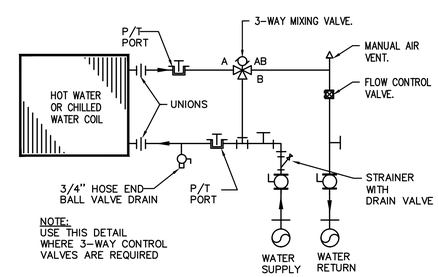

3-WAY MIXING VALVE

2 / M6.0 WATER COIL
SCALE: DETAIL

REGISTERED PROFESSIONAL ENGINEER 17884 OREGON JULY 25, 1985 SCOTT W. MILLER
EXPIRES: 31DEC24

Date: 11/17/2022
Proj No: 10172
Drawn By: ABB
Chkd By: SM
DSGN By: SM
Acad File:

ASHLAND SD BELLVIEW ELEMENTARY SCHOOL
1070 TOLMAN CREEK RD
ASHLAND OREGON

MECHANICAL SCHEDULES & DETAILS

MFIA INC.
Consulting Engineers
2007 S.E. Ash St.
Portland, OR 97214
PHN: (503) 234-0548
FAX: (503) 234-0677
WWW.MFIA-ENG.COM

SHEET
M6.0

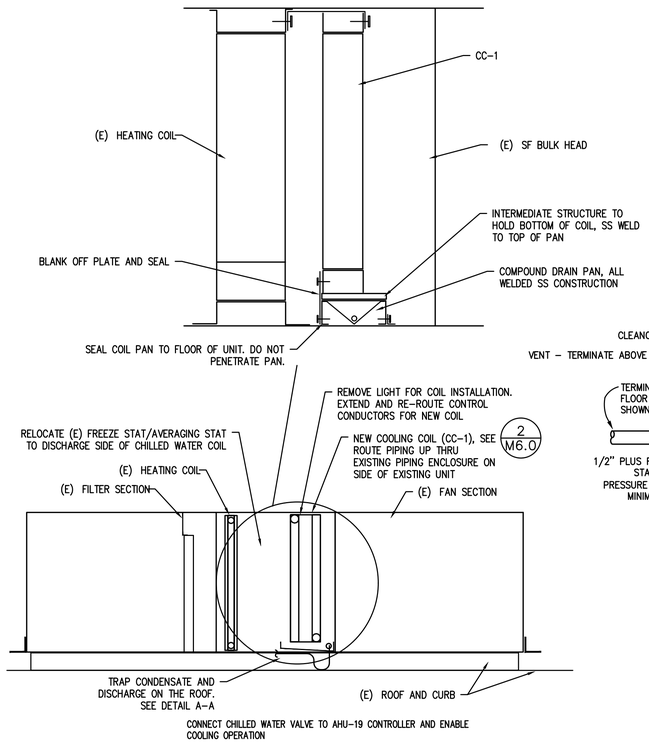

1/M6.1 AHU-19 SECTION
SCALE: DETAIL

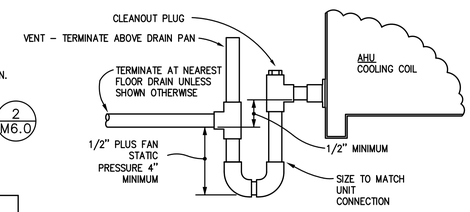

DETAIL A-A

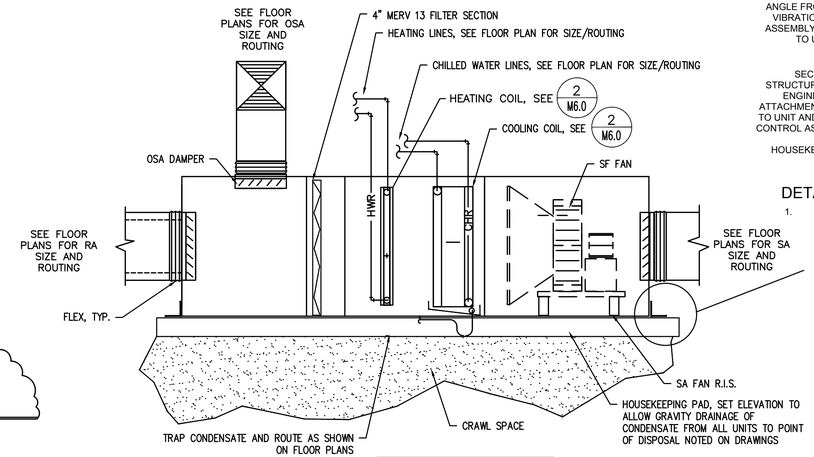

NOTE:
SEE DETAIL 5/M5.0 FOR CONTROLS.

2/M6.1 AIR HANDLER
SCALE: DETAIL

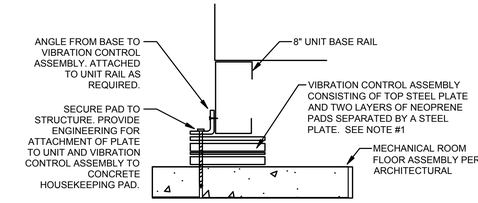

DETAIL NOTES:

1. NOTE #1: NEOPRENE PADS TO BE MASON SUPER W OR KINETICS NPS / NPD SERIES. ASSEMBLY TO PROVIDE 0.15" STATIC DOUBLE DEFLECTION. STEEL PLATE TO BE 3/8" THICK. TOTAL HEIGHT OF ISOLATION ASSEMBLY TO BE 2.0" MINIMUM ONCE LOADED. PROVIDE ISOLATION AREA SUCH THAT WEIGHT PER SQUARE INCH OF PAD DOES NOT EXCEED 45 LBS.

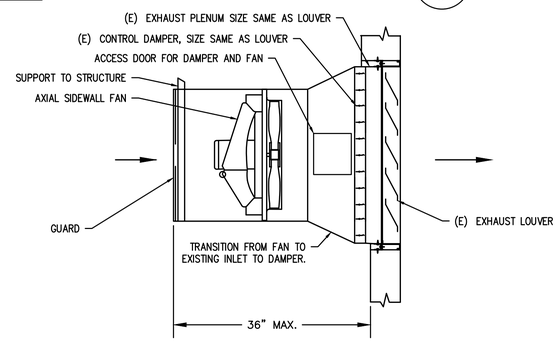

3/M6.1 PROP EXHAUST FAN
SCALE: DETAIL

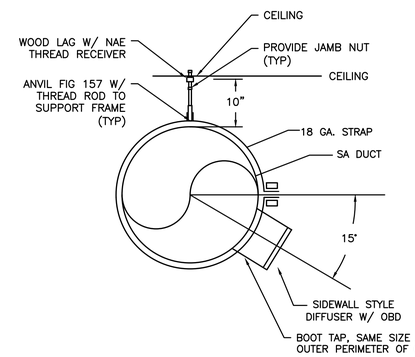

4/M6.1 EXPOSED DUCT W/ DIFFUSER DETAIL
SCALE: DETAIL

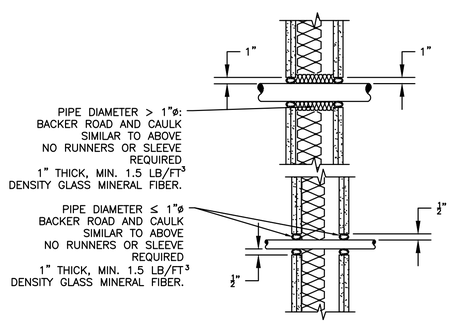

PIPE/CONDUIT PENETRATION DRYWALL CONSTRUCTION TO BE APPLIED TO WALLS WITH STC ≥ 49

SEE ARCHITECTURAL DRAWINGS FOR ACOUSTICALLY IMPORTANT WALLS (WALL TYPES). SEAL PENETRATIONS IN THOSE WALLS PER THESE DETAILS

5/M6.1 ACCOUSTICAL PENETRATION
SCALE: DETAIL

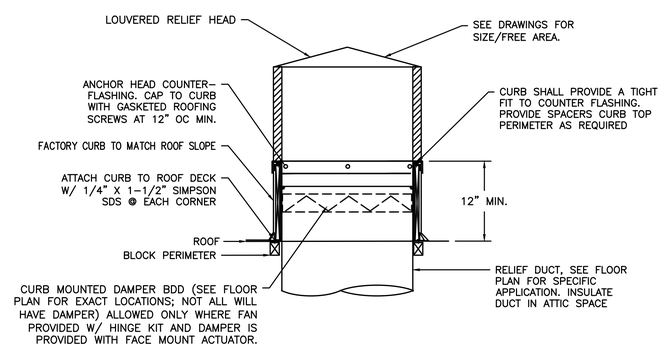

6/M6.1 LOUVERED PENTHOUSE RELIEF
SCALE: DETAIL

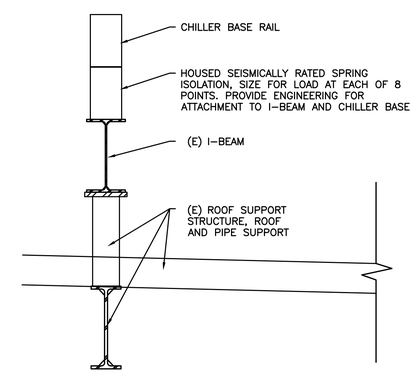

NOTE:
EXISTING SUPPORT STRUCTURE CARRIES A CHILLER THAT IS 88" X 221.5" AND WEIGHS 8775 LBS. NEW BOD CHILLER IS 88" X 229" AND WEIGHS 7900 LBS.

7/M6.1 CHILLER VIBRATION ISOLATION
SCALE: DETAIL

REGISTERED PROFESSIONAL ENGINEER 17884 OREGON JULY 25, 1985 SCOTT W. MILLER
EXPIRES: 31DEC24

Date: 11/17/2022
Proj No: 10172
Drawn By: ARB
Chkd By: SM
DSGN By: SM
Acad File:

ASHLAND SD BELLVIEW ELEMENTARY SCHOOL
1070 TOLMAN CREEK RD
ASHLAND OREGON

MECHANICAL DETAILS

MFIA INC.

Consulting Engineers
2007 S.E. Ash St.
Portland, OR 97214
PHN: (503) 234-0548
FAX: (503) 234-0677
WWW.MFIA-ENG.COM

SHEET
M6.1

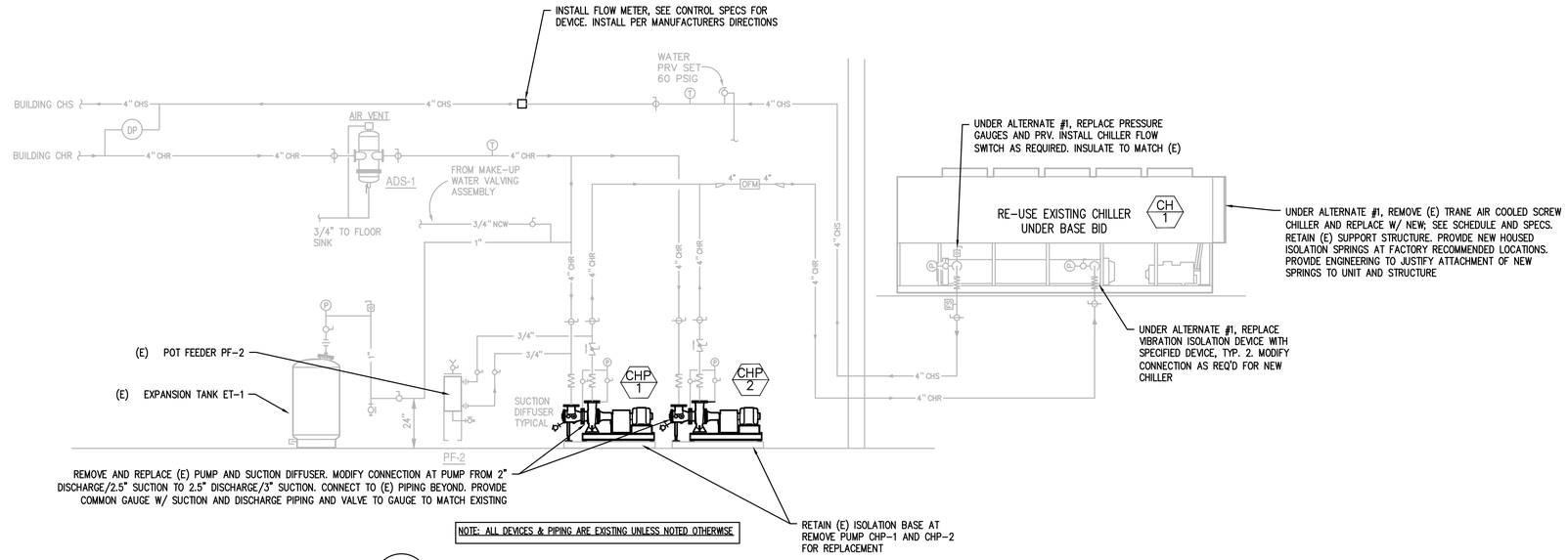

NOTE: ALL DEVICES & PIPING ARE EXISTING UNLESS NOTED OTHERWISE

1 / M6.2 CHILLER SYSTEM DETAIL

SCALE: DETAIL

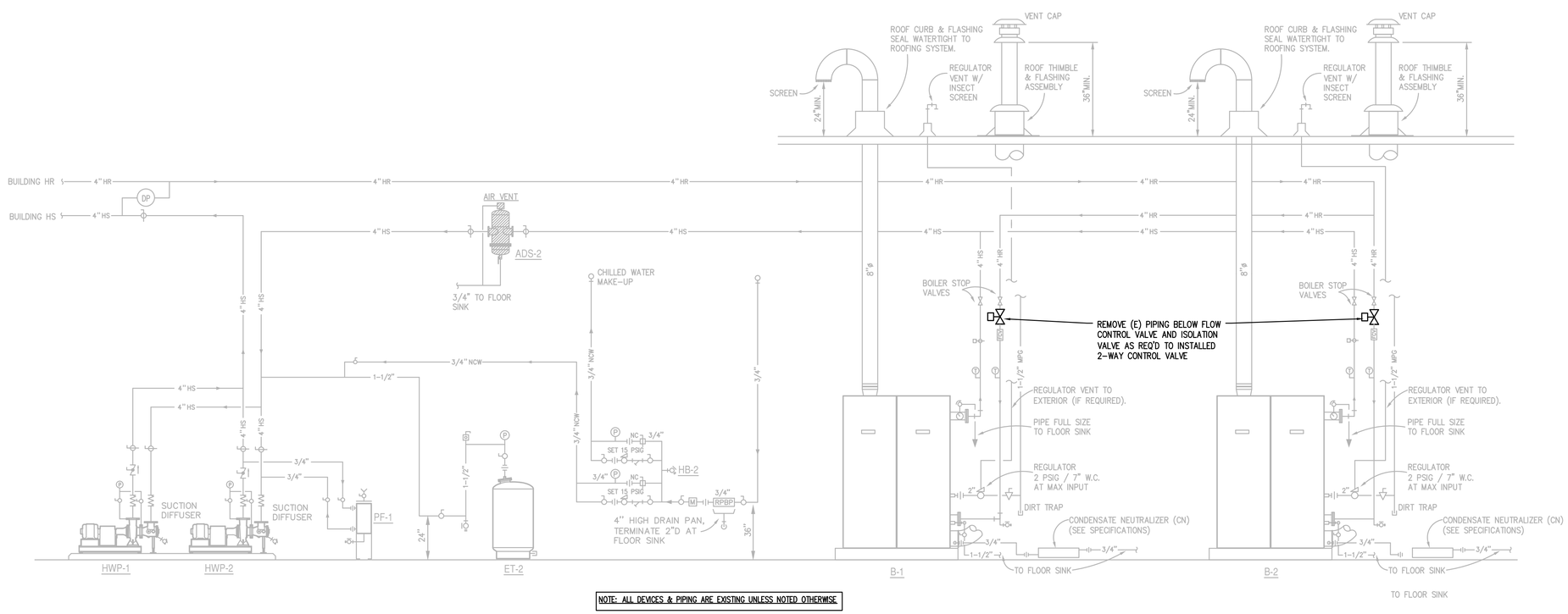

NOTE: ALL DEVICES & PIPING ARE EXISTING UNLESS NOTED OTHERWISE

2 / M6.2 BOILER SYSTEM DETAIL

SCALE: DETAIL

REGISTERED PROFESSIONAL ENGINEER 17884 OREGON JULY 25, 1985 SCOTT W. MILLER
EXPIRES: 31DEC24

Date: 11/17/2022
Proj No: 10172
Drawn By: ABB
Chkd By: SM
DSGN By: SM
Acad File:

ASHLAND SD BELLVIEW ELEMENTARY SCHOOL
1070 TOLMAN CREEK RD
ASHLAND OREGON

MECHANICAL DETAILS

MFIA INC.

Consulting Engineers
2007 S.E. Ash St.
Portland, OR 97214
PHN: (503) 234-0548
FAX: (503) 234-0677
WWW.MFIA-ENG.COM

SHEET
M6.2

FIRE ALARM NOTES

1. WORK IS LIMITED TO RELOCATION AND REPLACEMENT OF ONE AUDIBLE/VISIBLE SIGNALING APPLIANCE, IN ACCORDANCE WITH NFPA 72.
2. MANUFACTURER (EXISTING): SIEMENS.
3. AUDIBLE-VISIBLE INDICATING APPLIANCE: HIGH PERFORMANCE HORN, 85DBA AT 10' WITH VISIBLE STROBE AND FLASHER, WHITE LETTERED "FIRE" ON RED PACKGROUND, SYNCHRONIZING TYPE, MATCH EXISTING CANDELAS.
4. FIRE ALARM CABLE SHALL BE UL LISTED FOR USE WITH THE SYSTEM INSTALLED. ALL FIRE ALARM CABLE SHALL BE IN A DEDICATED CONDUIT SYSTEM.

ELECTRICAL GENERAL NOTES

SEE DIVISION 26 SPECIFICATIONS FOR EXPANDED REQUIREMENTS.

1. WORK INCLUDES INSTALLATION OF ALL ELECTRICAL SYSTEMS COMPLETE AND OPERATIONAL TO THE SATISFACTION OF THE OWNER AS LIMITED BY THE CONTRACT DOCUMENTS.
2. ELECTRICAL WORK SHALL BE PERFORMED IN ACCORDANCE WITH THE 2021 EDITION OF THE NATIONAL ELECTRICAL CODE (NFPA 70) WITH OREGON AMENDMENTS, NATIONAL ELECTRICAL SAFETY CODE AND ALL LOCAL RULES AND REGULATIONS.
3. CONFORM TO DIVISION 1 SPECIFICATIONS SECTIONS REGARDING PERMITS.
4. VISIT THE JOB SITE AND VERIFY ALL EXISTING CONDITIONS AND THE EXTENT OF REMOVAL, RELOCATION, RECONNECTION AND/OR NEW WORK PRIOR TO BIDDING. BID SUBMISSION SHALL BE CONSIDERED AS EVIDENCE OF SITE INSPECTION AND RESOLUTION OF ALL DISCREPANCIES AND QUESTIONS. NO EXTRA PAYMENT WILL BE AUTHORIZED FOR WORK MADE NECESSARY BY FAILURE TO VISIT THE SITE.
5. SUBMIT SHOP DRAWINGS TO THE ENGINEER FOR ALL LUMINAIRES, EQUIPMENT AND DEVICES COVERED BY THIS CONTRACT FOR APPROVAL PRIOR TO ORDERING. SHOP DRAWINGS SHALL BEAR THE CONTRACTOR'S STAMP AND SIGNATURE INDICATING THEY HAVE BEEN CHECKED AND ARE IN COMPLIANCE WITH THE CONTRACT DOCUMENTS. SHOP DRAWINGS NOT BEARING CONTRACTOR APPROVAL WILL BE RETURNED WITHOUT REVIEW.
6. SHOP DRAWINGS ARE INTENDED TO SHOW UNDERSTANDING OF, AND COMPLIANCE WITH, THE CONTRACT DOCUMENTS. CAD FILES OF THE PROJECT DOCUMENTS WILL NOT BE AVAILABLE FOR USE AS SHOP DRAWINGS.
7. SHOULD PROJECT CONDITIONS, INCLUDING CONDITIONS UNCOVERED BY DEMOLITION OR CHANGES TO OTHER TRADES, REQUIRE REARRANGEMENT OF WORK, MARK SUCH CHANGES ON AS-BUILT DRAWINGS. IF PROJECT CONDITIONS REQUIRE UNSPECIFIED MATERIALS OR METHODS, SUBMIT REQUEST FOR INFORMATION (RFI) TO THE ENGINEER WITH DRAWINGS SHOWING THE PROPOSED ALTERNATIVE MATERIALS OR METHODS. DO NOT PROCEED WITH THE WORK UNTIL APPROVAL IS OBTAINED. RFIs SUBMITTED WITHOUT PROPOSED SOLUTIONS WILL BE RETURNED WITHOUT REVIEW. REARRANGEMENT OF WORK FOR THE PURPOSE OF COORDINATION BETWEEN TRADES SHALL NOT BE CONSIDERED REASON FOR EXTRA COST.
8. OBTAIN AND REVIEW PRODUCT DATA, SHOP DRAWINGS AND INSTALLATION INSTRUCTIONS FOR OWNER-FURNISHED EQUIPMENT, AND EQUIPMENT FURNISHED BY OTHER TRADES. VERIFY ELECTRICAL REQUIREMENTS OF EQUIPMENT ACTUALLY PROVIDED PRIOR TO ROUGH-IN.
9. PROVIDE RECORD DOCUMENTS AT THE CLOSE OF CONSTRUCTION. INCLUDE OPERATIONS AND MAINTENANCE MANUALS FOR ALL EQUIPMENT, AND COPIES OF WARRANTIES, TEST RECORDS AND CERTIFICATIONS. INCLUDE AS-BUILT DRAWINGS: SHOW ALL CHANGES MADE PER PROJECT CONDITIONS, LOCATIONS OF ALL DISTRIBUTION APPARATUS, PULL AND JUNCTION BOXES, AND ROUTING OF CONDUITS 2" AND LARGER.
10. ALL FEEDERS AND EXPOSED BRANCH CIRCUITS SHALL BE IN CONDUIT. ALL CONDUIT IN FINISHED AREAS SHALL BE CONCEALED; USE SURFACE METAL RACEWAY IN EXISTING FINISHED AREAS WHERE CONDUIT CANNOT BE CONCEALED. ALL CONDUIT IN UNFINISHED AREAS MAY BE EXPOSED. MINIMUM CONDUIT SIZE IS 0.5 INCH. EMT AND FLEXIBLE METAL CONDUIT SHALL BE USED FOR ALL INTERIOR APPLICATIONS. EMT AND RIGID GALVANIZED STEEL CONDUIT SHALL BE USED FOR ALL EXPOSED EXTERIOR LOCATIONS. CONDUIT IN OR UNDER THE SLAB SHALL BE SCHEDULE 40 PVC. ALL BURIED CONDUIT NOT UNDER A SLAB SHALL BE SCHEDULE 40 PVC, CONCRETE ENCASED WHERE INDICATED.
11. FITTINGS FOR EMT CONDUIT SHALL BE STEEL SET SCREW OR COMPRESSION TYPE. DIE-CAST FITTINGS ARE PROHIBITED. FITTINGS FOR RGS CONDUIT SHALL BE GALVANIZED MALLEABLE IRON. FITTINGS FOR PVC CONDUIT SHALL BE SCHEDULE 40 PVC.
12. CONDUIT SIZES INDICATED ON THE DRAWINGS MAY BE PURPOSELY OVERSIZED FOR FUTURE CONDUCTORS OR TO AVOID EXCESS CONDUIT HEATING. CONDUIT SIZES NOT SHOWN ON THE DRAWINGS SHALL BE SIZED BY THE CONTRACTOR BASED ON THE NUMBER OF CONDUCTORS TO BE INSTALLED, IN ACCORDANCE WITH NFPA 70.
13. PROVIDE AND INSTALL ALL JUNCTION AND PULL BOXES REQUIRED FOR THE INSTALLATION OF ELECTRICAL DEVICES AND EQUIPMENT, WHETHER OR NOT INDICATED ON PLANS. SIZING OF BOXES SHALL BE PER NFPA 70.
14. ALL PENETRATIONS THROUGH FIRE RATED WALLS AND SLABS SHALL BE SEALED TO MAINTAIN THE INTEGRITY OF THE FIRE RATING, USING A U.L. LISTED FIRE RATED SEALANT.
15. OBTAIN APPROVAL FROM THE ARCHITECT BEFORE MAKING ANY PENETRATIONS THROUGH STRUCTURAL MEMBERS OR FIRE RATED WALLS OR CEILINGS.
16. ALL CONDUCTORS #8 AND LARGER SHALL BE STRANDED COPPER, 600 VOLT INSULATION TYPE XHHW. ALL CONDUCTORS SMALLER THAN #8 SHALL BE SOLID OR STRANDED COPPER, 600 VOLT INSULATION TYPE THHN/THWN.
17. METAL-CLAD ARMORED (TYPE AC OR MC) CABLE MAY BE USED FOR CONCEALED BRANCH CIRCUIT WIRING AND FIXTURE WHIPS. NONMETALLIC-SHEATHED (TYPE NM OR NMS) CABLE IS PROHIBITED.
18. PROVIDE A GREEN INSULATED EQUIPMENT GROUNDING CONDUCTOR IN ALL FEEDERS AND BRANCH CIRCUITS, INCLUDING SWITCH LEGS. SIZE GROUNDING CONDUCTOR PER NFPA 70, TABLE 250-122.
19. BRANCH CIRCUIT ARRANGEMENTS ON PLANS ARE DIAGRAMMATIC AND DO NOT INDICATE ACTUAL ROUTING. USE #10 AWG CONDUCTORS FOR 20A 120V BRANCH CIRCUIT CONDUCTORS LONGER THAN 75 FEET.
20. UPDATE THE CIRCUIT DIRECTORIES IN EXISTING PANELBOARDS TO ACCURATELY REFLECT THE NEW CIRCUITING. THE CIRCUIT DIRECTORIES SHALL IDENTIFY THE SOURCE OF POWER PER NEC 408.4(B).
21. ALL DISCONNECT SWITCHES AND ENCLOSED CIRCUIT BREAKERS SHALL BE NEMA 1 INDOORS AND NEMA 3R OUTDOORS UNLESS NOTED OTHERWISE. PROVIDE FUSED SWITCHES FOR HERMETICALLY-SEALED EQUIPMENT. VOLTAGE, AMPERE AND MINIMUM A.I.C. RATINGS ARE SHOWN ON DIAGRAMS AND PLANS.
MANUFACTURERS: SIEMENS-ITE, GENERAL ELECTRIC, CUTLER-HAMMER, SQUARE D.

ELECTRICAL LEGEND

	NEW WORK
	EXISTING OR BY OTHERS
	EXISTING TO BE REMOVED
	PANELBOARD, 120/208V 3ø 4 WIRE
	DISCONNECT SWITCH, VOLTAGE AND RATING TO MATCH CIRCUIT BREAKER
J	JUNCTION BOX, SIZE PER N.E.C.
E	CONNECTION TO EQUIPMENT FURNISHED BY OTHERS: CONFORM TO SECTION 260575
	DUPLEX RECEPTACLE, 20A 125V GROUNDING TYPE, SPECIFICATION GRADE, MOUNTED +15" TO BOTTOM, U.N.O.
GF	DUPLEX RECEPTACLE, 20A 125V GROUND FAULT CURRENT INTERRUPTING, SPECIFICATION GRADE, MOUNTED +15" TO BOTTOM, U.N.O.
	QUADRIPLEX RECEPTACLE, 20A 125V GROUNDING TYPE, SPECIFICATION GRADE, MOUNTED +15" TO BOTTOM, U.N.O.
	SPECIAL RECEPTACLE, NEMA CONFIGURATION TO MATCH EQUIPMENT CORDSET
ST	MOTOR-STARTING TOGGLE SWITCH, 20A 120/277V WITH THERMAL OVERLOAD PROTECTION TO MATCH LOAD SERVED, CONSTRUCTION GRADE
	DATA OUTLET, EXISTING, WITH EXISTING BACKBOX AND DEVICE PLATE MOUNTED AT +15" TO BOTTOM. SEE PLANS FOR No AND TYPE OF CABLES
	CONDUIT AND WIRE, SAME WIRE AS INDICATED ON HOME RUN, CONDUIT SIZE DETERMINED BY CONTRACTOR
	HOME RUN TO PANEL, CIRCUIT NO. INDICATED, MIN. 0.75"-2#12,#12GND. U.N.O. COMBINE UP TO THREE 1P15A OR 1P20A CIRCUITS IN ONE HOME RUN USING OPPOSITE PHASE LEGS ONLY; PROVIDE SEPARATE NEUTRAL CONDUCTORS FOR EACH CIRCUIT. PROVIDE HANDLE TIES FOR EXISTING MULTICIRCUIT HOME RUNS THAT HAVE COMMON NEUTRALS
C.O.	CONDUIT ONLY, WITH PULL WIRE
C.T.	MOUNTED ABOVE COUNTERTOP BACKSPLASH
O.H.	OVERHEAD
U.G.	UNDERGROUND
U.N.O.	UNLESS NOTED OTHERWISE
W.P.	WEATHERPROOF

DEMOLITION NOTES

1. THE ELECTRICAL DRAWINGS ARE BASED ON RECORD DRAWINGS AND CASUAL FIELD SURVEY, AND DO NOT INCLUDE ALL EXISTING EQUIPMENT, DEVICES, ETC. THAT MAY BE ENCOUNTERED. FIELD VERIFY EXISTING CONDITIONS PRIOR TO MODIFICATIONS AND NEW WORK. REMOVE OR REROUTE EXISTING SERVICES AS SHOWN OR AS REQUIRED.
2. VERIFY THAT ALL EXISTING EQUIPMENT TO REMAIN IS IN PROPER WORKING ORDER. ANY ITEMS IN A NON-WORKING CONDITION SHALL BE REPLACED OR REPAIRED AS NECCESSARY.
3. REMOVE ALL UNUSED WIRING BACK TO ORIGIN, OR NEXT DEVICE OUTSIDE OF PROJECT LIMITS, INCLUDING WIRING DISCONNECTED UNDER THIS CONTRACT OR UNCOVERED BY DEMOLITION.
4. WHERE UNUSED WIRING TERMINATES AT A PANELBOARD AND NO LOADS ARE ON THAT CIRCUIT, RE-LABEL THE EXISTING CIRCUIT AS "SPARE".
5. UNUSED UNDERGROUND RACEWAY MAY BE ABANDONED IN PLACE WHERE NOT IN CONFLICT WITH NEW WORK. REMOVE ALL UNUSED RACEWAY WHERE REQUIRED BY NEW WORK, INCLUDING RACEWAY DISCONNECTED UNDER THIS CONTRACT OR UNCOVERED BY DEMOLITION.
6. MAINTAIN CIRCUIT CONTINUITY AS REQUIRED FOR SERVICES AND EQUIPMENT TO REMAIN, INCLUDING THOSE UNCOVERED BY DEMOLITION. COORDINATE WITH NEW WORK AND RE-ROUTE CONDUIT AND WIRE AS REQUIRED TO AVOID CONFLICT WITH NEW WORK.
7. CORRECT WIRING METHOD CODE VIOLATIONS UNCOVERED BY DEMOLITION. PROVIDE JUNCTION BOXES FOR ALL SPLICES.
8. ALL NEW AND REMAINING JUNCTION AND PULL BOXES SHALL BE ACCESSIBLE PER NFPA 70. RELOCATE EXISTING BOXES AS REQUIRED BY NEW CONSTRUCTION.
9. ALL MATERIALS REMOVED ARE THE PROPERTY OF THE OWNER, AND SHALL BE REMOVED FROM THE JOBSITE AT THE CONTRACTOR'S EXPENSE.

REGISTERED PROFESSIONAL ENGINEER 16,747 OREGON JULY 20, 1993 DOUGLAS A. BUHR
EXPIRES: 12-31-23

Date:	11/17/2022
Proj No:	10173
Drawn By:	MKH
Chkd By:	DAB
DSGN By:	MKH
Acad File:	

ASHLAND SD BELLVIEW ELEMENTARY SCHOOL
1070 TOLMAN CREEK ROAD
ASHLAND OREGON

Electrical Legends and Notes

MFIA INC.

Consulting Engineers
2007 S.E. Ash St.
Portland, OR 97214
PHN: (503) 234-0548
FAX: (503) 234-0677
WWW.MFIA-ENG.COM

BID & PERMIT SET

SHEET
E0.01
OF

Drawing name: C:\Douglas Engineering Pacific, Inc\Projects - 2021\21506 Bellview Elementary School\21506 e legends and notes.dwg Nov 11, 2022 - 1:49pm

THIS DRAWING IS AN "INSTRUMENT OF SERVICE" AND IS COPYRIGHTED BY DOUGLAS ENGINEERING PACIFIC, INC. IT MAY NOT BE COPIED, REPRODUCED, SCANNED, ALTERED, OR USED IN ANY MANNER WITHOUT EXPRESS WRITTEN PERMISSION OF DOUGLAS ENGINEERING PACIFIC, INC. THIS WORK IS PART OF AN INTEGRATED PROCESS OF TECHNICAL DESIGN. USE OUTSIDE THIS PROCESS IS INAPPROPRIATE AND TRANSFER OF ITS OBSERVATIONS, CONCLUSIONS, OR METHODOLOGY TO ANY OTHER WORK MAY HAVE SERIOUS CONSEQUENCES.

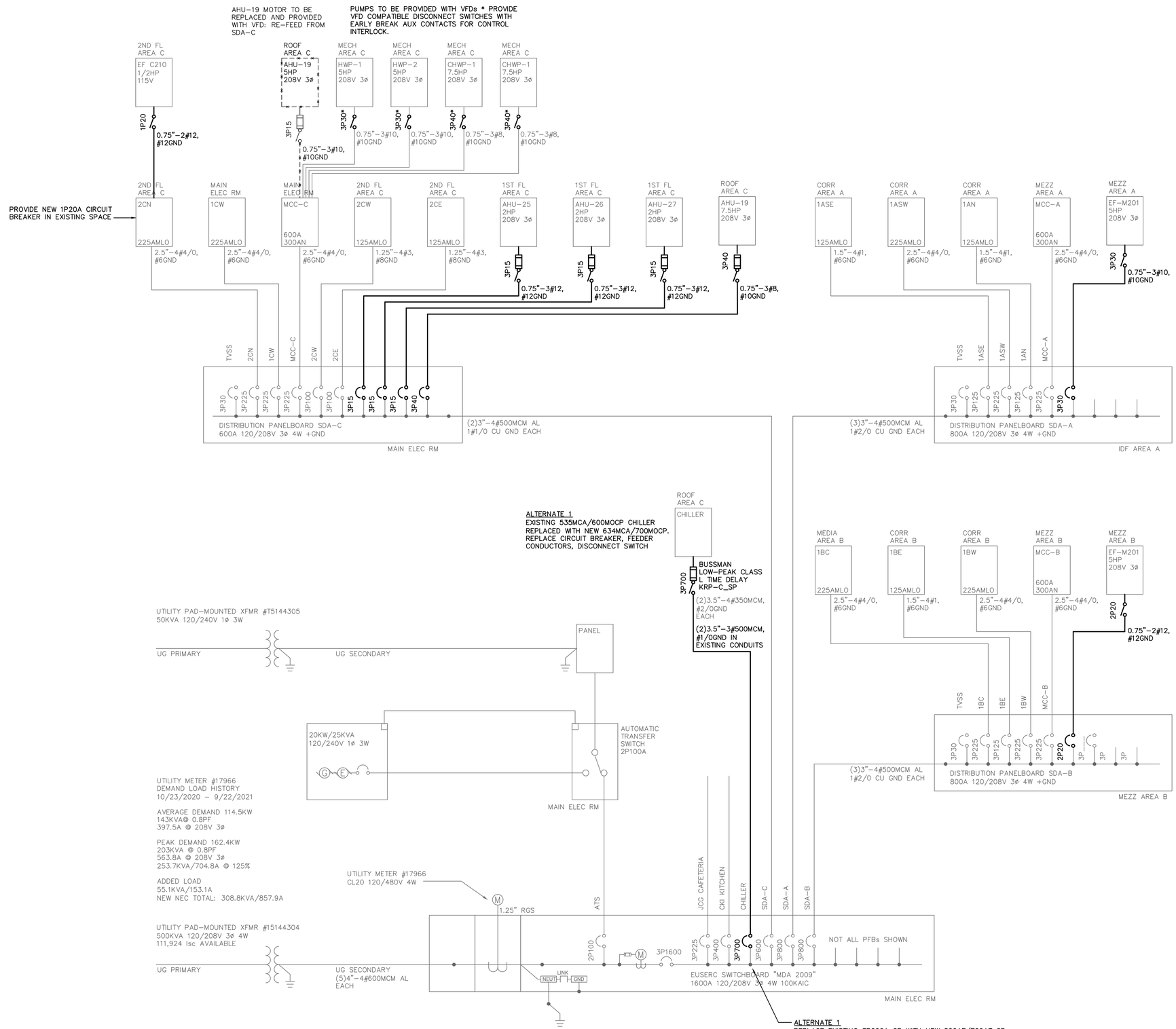

1 E0.02 **POWER 1-LINE DIAGRAM (EXISTING)**
SCHEMATIC

NEW WORK
EXISTING OR BY OTHERS
EXISTING TO BE REMOVED

REGISTERED PROFESSIONAL ENGINEER
OREGON
DOUGLAS A. BUHR
EXPIRES: 12-31-23

Date: 11/17/2022
Proj No: 10173
Drawn By: MKH
Chkd By: DAB
DSGN By: MKH
Acad File:

ASHLAND SD BELLVIEW ELEMENTARY SCHOOL
1070 TOLMAN CREEK ROAD
ASHLAND OREGON

Electrical Diagram

MFIA INC.

Consulting Engineers
2007 S.E. Ash St.
Portland, OR 97214
PHN: (503) 234-0548
FAX: (503) 234-0677
WWW.MFIA-ENG.COM

Electrical Diagram

BID & PERMIT SET

E0.02

Drawing name: C:\Douglas Engineering Pacific, Inc\Projects - 2021\21506 Bellview Elementary School\21506 e diagrams.dwg Nov 11, 2022 - 1:50pm

THIS DRAWING IS AN "INSTRUMENT OF SERVICE" AND IS COPYRIGHTED BY DOUGLAS ENGINEERING PACIFIC, INC. IT MAY NOT BE COPIED, REPRODUCED, SCANNED, ALTERED, OR USED IN ANY MANNER WITHOUT EXPRESS WRITTEN PERMISSION OF DOUGLAS ENGINEERING PACIFIC, INC. THIS WORK IS PART OF AN INTEGRATED PROCESS OF TECHNICAL DESIGN. USE OUTSIDE THIS PROCESS IS INAPPROPRIATE AND TRANSFER OF ITS OBSERVATIONS, CONCLUSIONS, OR METHODOLOGY TO ANY OTHER WORK MAY HAVE SERIOUS CONSEQUENCES.

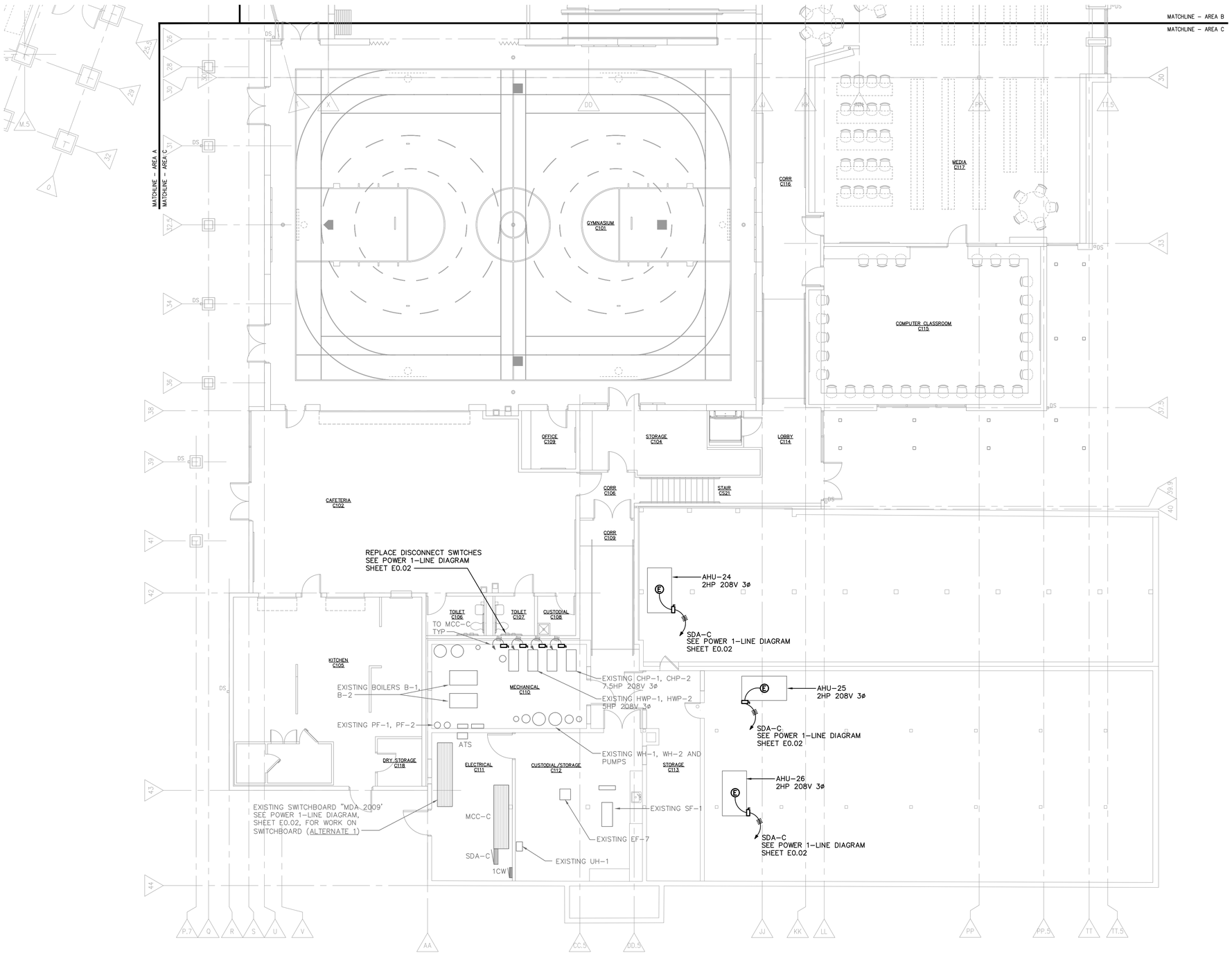

1 **ELECTRICAL PLAN - FIRST FLOOR AREA C**
1/8" = 1'-0"

NEW WORK
EXISTING OR BY OTHERS
EXISTING TO BE REMOVED

1/8"=1'-0" 4' 0 4' 8' 12' 16' 20' scale feet

REGISTERED PROFESSIONAL ENGINEER
16,767
OREGON
NOV. 20, 1993
DOUGLAS A. BUHR
EXPIRES: 12-31-23

Date: 11/17/2022
Proj No: 10173
Drawn By: MKH
Chkd By: DAB
DSGN By: MKH
Acad File:

ASHLAND SD BELLVIEW ELEMENTARY SCHOOL
1070 TOLMAN CREEK ROAD
ASHLAND OREGON

Electrical Plan First Floor Area C

MFIA INC.

Consulting Engineers
2007 S.E. Ash St.
Portland, OR 97214
PHN: (503) 234-0548
FAX: (503) 234-0677
WWW.MFIA-ENG.COM

BID & PERMIT SET

SHEET
E2.01
OF

Drawing name: C:\Douglas Engineering Pacific, Inc\Projects - 2021\21006 Bellview Elementary School\21006 e plans.dwg Nov 11, 2022 - 1:46pm

THIS DRAWING IS AN "INSTRUMENT OF SERVICE" AND IS COPYRIGHTED BY DOUGLAS ENGINEERING PACIFIC, INC. IT MAY NOT BE COPIED, REPRODUCED, SCANNED, ALTERED, OR USED IN ANY MANNER WITHOUT EXPRESS WRITTEN PERMISSION OF DOUGLAS ENGINEERING PACIFIC, INC. THIS WORK IS PART OF AN INTEGRATED PROCESS OF TECHNICAL DESIGN. USE OUTSIDE THIS PROCESS IS INAPPROPRIATE AND TRANSFER OF ITS OBSERVATIONS, CONCLUSIONS, OR METHODOLOGY TO ANY OTHER WORK MAY HAVE SERIOUS CONSEQUENCES.

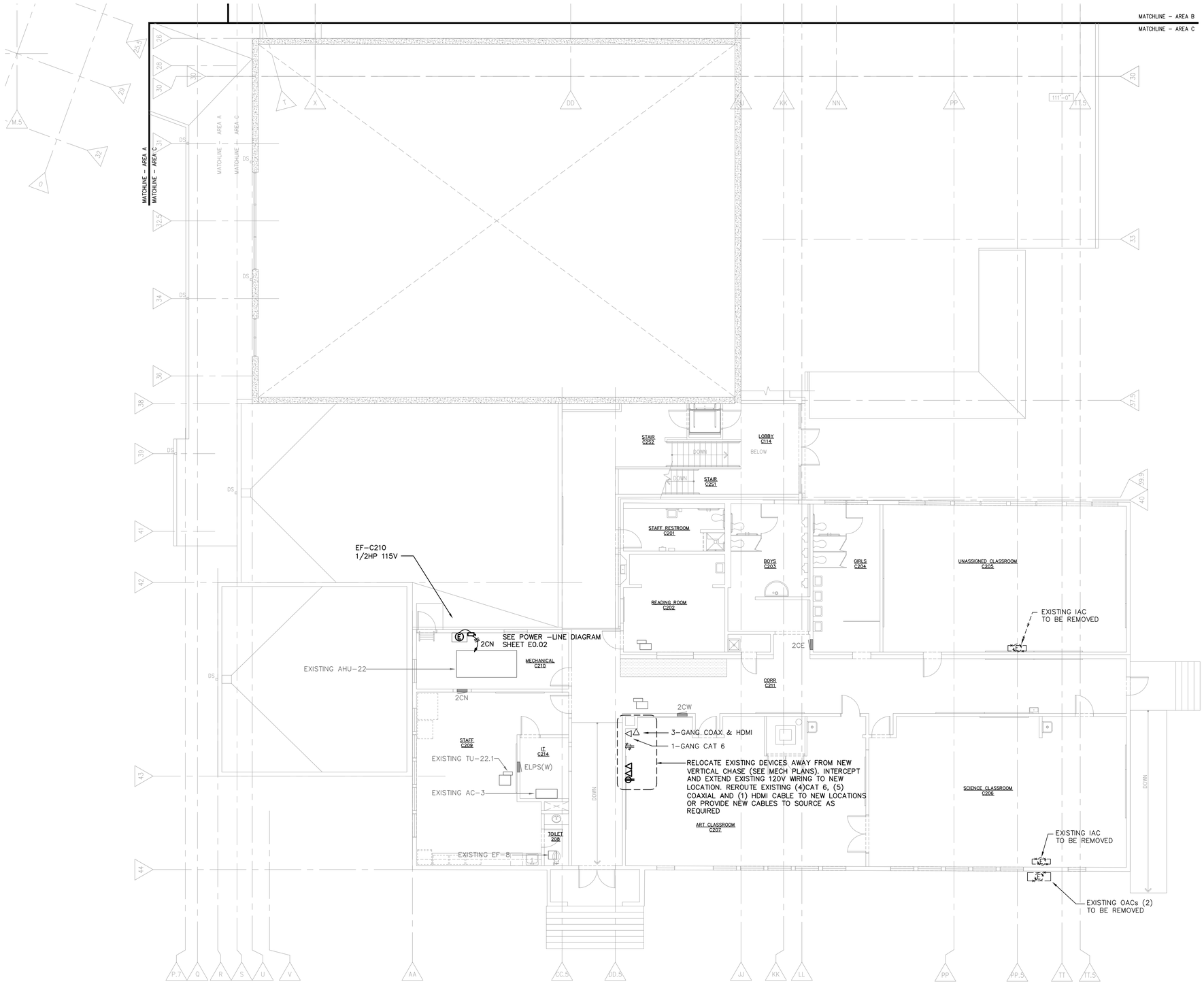

1 ELECTRICAL PLAN - SECOND FLOOR AREA C
1/8" = 1'-0"

NEW WORK
EXISTING OR BY OTHERS
EXISTING TO BE REMOVED

1/8"=1'-0" 4' 0 4' 8' 12' 16' 20' scale feet

REGISTERED PROFESSIONAL ENGINEER
OREGON
JULY 20, 1983
DOUGLAS A. BUHR
EXPIRES: 12-31-23

Date: 11/17/2022
Proj No: 10173
Drawn By: MKH
Chkd By: DAB
DSGN By: MKH
Acad File:

ASHLAND SD BELLVIEW ELEMENTARY SCHOOL
1070 TOLMAN CREEK ROAD
ASHLAND OREGON

Electrical Plan Second Floor Area C

MFIA INC.

Consulting Engineers
2007 S.E. Ash St.
Portland, OR 97214
PHN: (503) 234-0548
FAX: (503) 234-0677
WWW.MFIA-ENG.COM

BID & PERMIT SET

SHEET
E2.02
OF

Drawing name: C:\Douglas Engineering Pacific, Inc\Projects - 2021\21008 Bellview Elementary School\21008-e plans.dwg Nov 11, 2022 - 1:46pm

THIS DRAWING IS AN "INSTRUMENT OF SERVICE" AND IS COPYRIGHTED BY DOUGLAS ENGINEERING PACIFIC, INC. IT MAY NOT BE COPIED, REPRODUCED, SCANNED, ALTERED, OR USED IN ANY MANNER WITHOUT EXPRESS WRITTEN PERMISSION OF DOUGLAS ENGINEERING PACIFIC, INC. THIS WORK IS PART OF AN INTEGRATED PROCESS OF TECHNICAL DESIGN. USE OUTSIDE THIS PROCESS IS INAPPROPRIATE AND TRANSFER OF ITS OBSERVATIONS, CONCLUSIONS, OR METHODOLOGY TO ANY OTHER WORK MAY HAVE SERIOUS CONSEQUENCES.

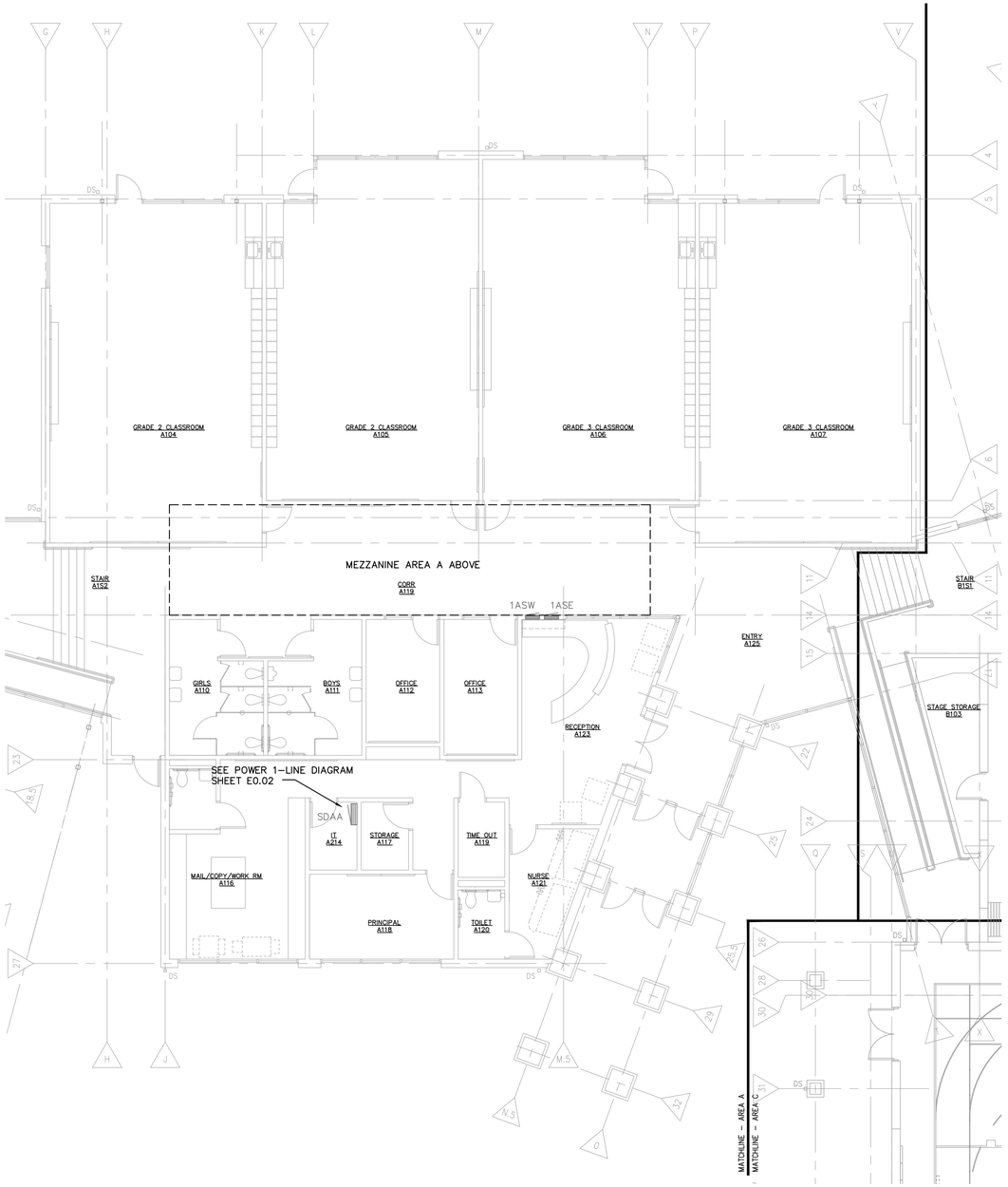

2 E2.03 ELECTRICAL PLAN - 1ST FLOOR AREA A
1/8" = 1'-0"

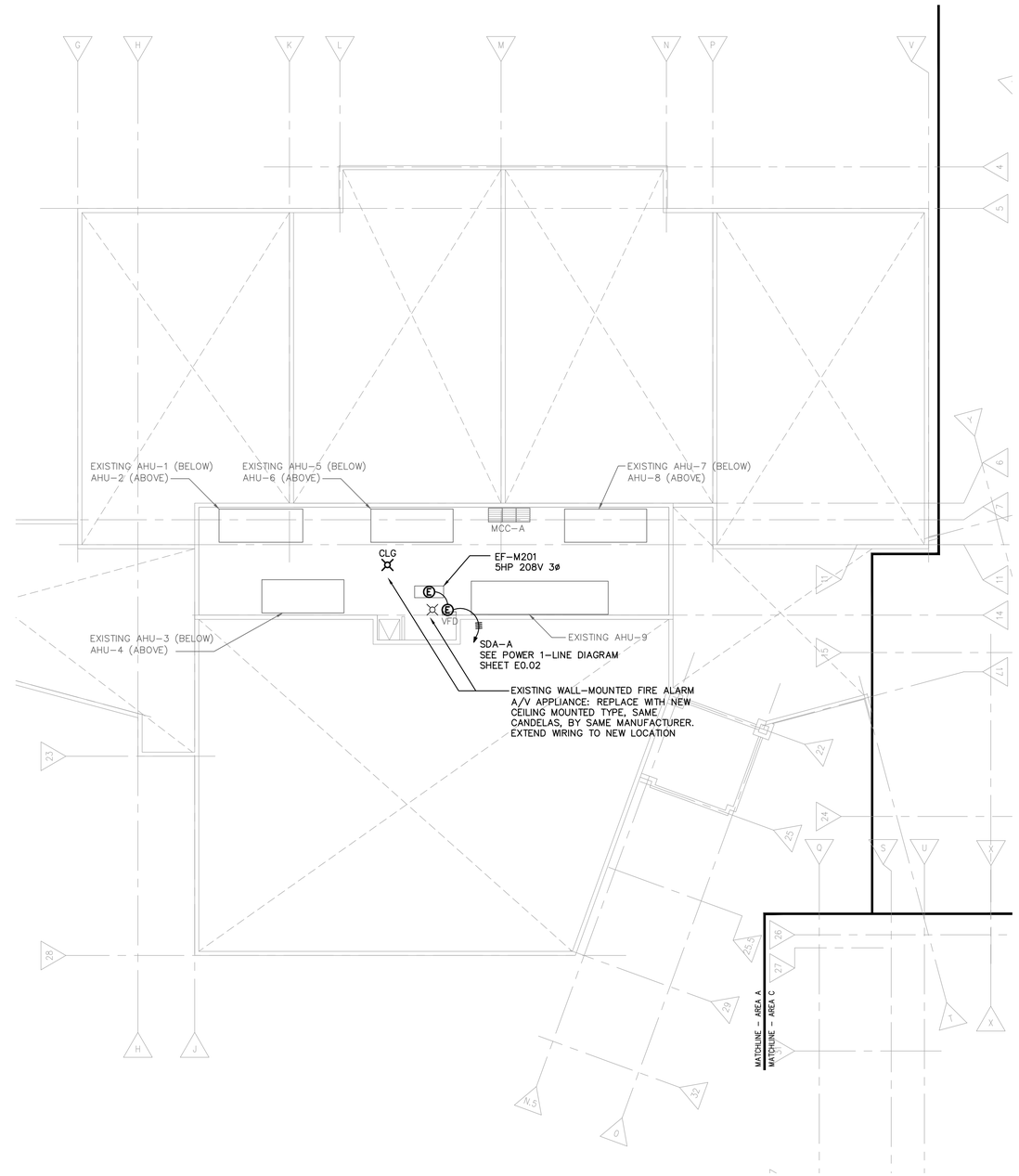

1 E2.03 ELECTRICAL PLAN - MEZZANINE AREA A
1/8" = 1'-0"

NEW WORK
EXISTING OR BY OTHERS
EXISTING TO BE REMOVED

1/8"=1'-0" 4' 0 4' 8' 12' 16' 20' scale feet

REGISTERED PROFESSIONAL ENGINEER 18,741 OREGON JULY 20, 1993 DOUGLAS A. BUHR
EXPIRES: 12-31-23

Date: 11/17/2022
Proj No: 10173
Drawn By: MKH
Chkd By: DAB
DSGN By: MKH
Acad File:

ASHLAND SD BELLVIEW ELEMENTARY SCHOOL
1070 TOLMAN CREEK ROAD
ASHLAND OREGON
Electrical Plan Mezzanine Area A

MFIA INC.

Consulting Engineers
2007 S.E. Ash St.
Portland, OR 97214
PHN: (503) 234-0548
FAX: (503) 234-0677
WWW.MFIA-ENG.COM

BID & PERMIT SET

SHEET
E2.03
OF

Drawing name: C:\Douglas Engineering Pacific, Inc\Projects - 2021\21506 Bellview Elementary School\21506 e plans.dwg Nov 11, 2022 - 1:46pm

THIS DRAWING IS AN "INSTRUMENT OF SERVICE" AND IS COPYRIGHTED BY DOUGLAS ENGINEERING PACIFIC, INC. IT MAY NOT BE COPIED, REPRODUCED, SCANNED, ALTERED, OR USED IN ANY MANNER WITHOUT EXPRESS WRITTEN PERMISSION OF DOUGLAS ENGINEERING PACIFIC, INC. THIS WORK IS PART OF AN INTEGRATED PROCESS OF TECHNICAL DESIGN. USE OUTSIDE THIS PROCESS IS INAPPROPRIATE AND TRANSFER OF ITS OBSERVATIONS, CONCLUSIONS, OR METHODOLOGY TO ANY OTHER WORK MAY HAVE SERIOUS CONSEQUENCES.

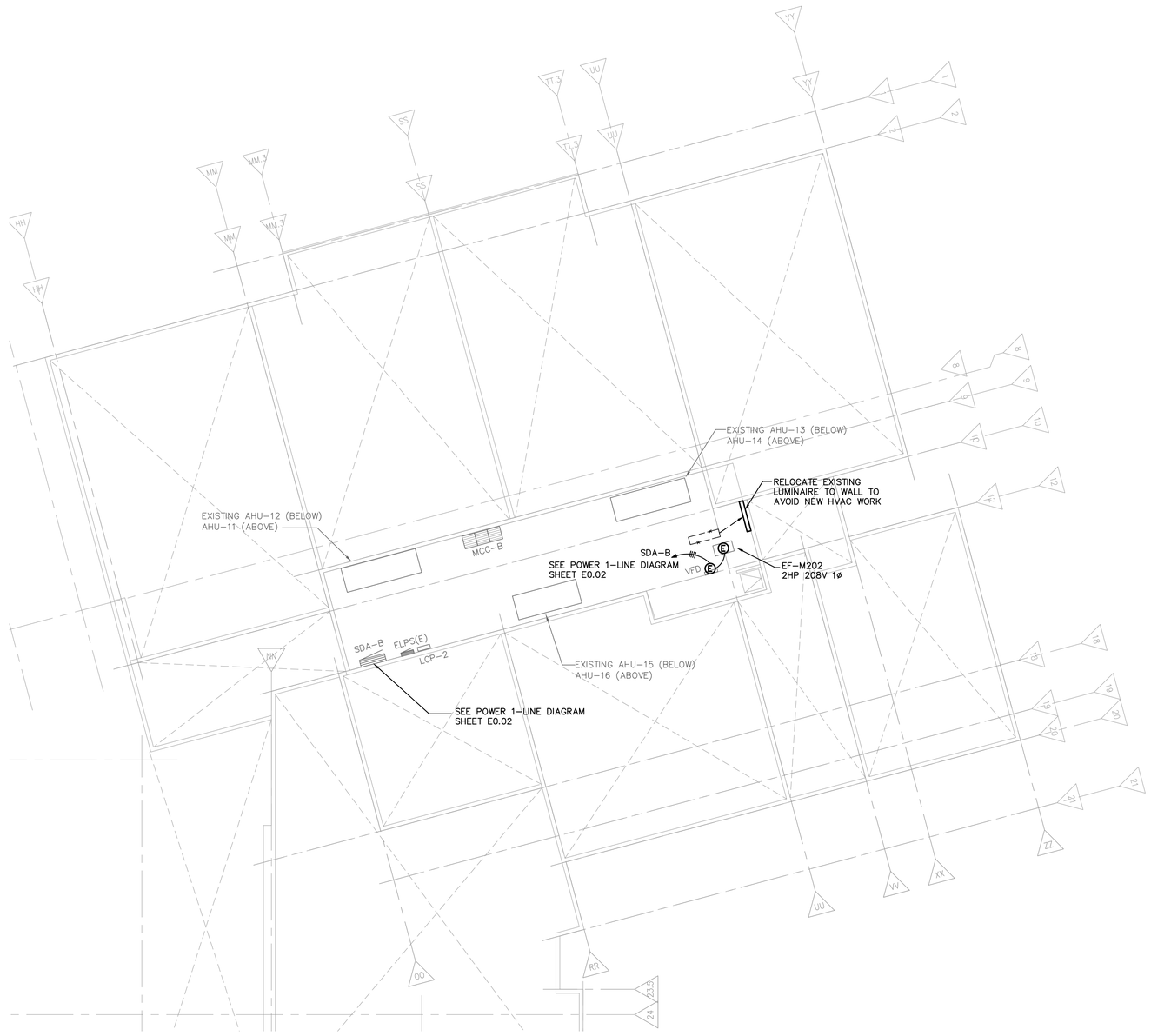

1 ELECTRICAL PLAN - MEZZANINE AREA B
1/8" = 1'-0"

NEW WORK
EXISTING OR BY OTHERS
EXISTING TO BE REMOVED

1/8"=1'-0" 4' 0 4' 8' 12' 16' 20'
scale feet

REGISTERED PROFESSIONAL ENGINEER
16,467
OREGON
MAY 20, 1983
DOUGLAS A. BUHR
EXPIRES: 12-31-23

Date:	11/17/2022
Proj No:	10173
Drawn By:	MKH
Chkd By:	DAB
DSGN By:	MKH
Acad File:	

ASHLAND SD BELLVIEW ELEMENTARY SCHOOL
1070 TOLMAN CREEK ROAD
ASHLAND OREGON

Electrical Plan Mezzanine Area B

MFIA INC.

Consulting Engineers
2007 S.E. Ash St.
Portland, OR 97214
PHN: (503) 234-0548
FAX: (503) 234-0677
WWW.MFIA-ENG.COM

BID & PERMIT SET

SHEET
E2.04
OF

Drawing name: C:\Douglas Engineering Pacific, Inc\Projects - 2021\21006 Bellview Elementary School\21006-e plans.dwg Nov 11, 2022 - 1:46pm

THIS DRAWING IS AN "INSTRUMENT OF SERVICE" AND IS COPYRIGHTED BY DOUGLAS ENGINEERING PACIFIC, INC. IT MAY NOT BE COPIED, REPRODUCED, SCANNED, ALTERED, OR USED IN ANY MANNER WITHOUT EXPRESS WRITTEN PERMISSION OF DOUGLAS ENGINEERING PACIFIC, INC. THIS WORK IS PART OF AN INTEGRATED PROCESS OF TECHNICAL DESIGN. USE OUTSIDE THIS PROCESS IS INAPPROPRIATE AND TRANSFER OF ITS OBSERVATIONS, CONCLUSIONS, OR METHODOLOGY TO ANY OTHER WORK MAY HAVE SERIOUS CONSEQUENCES.

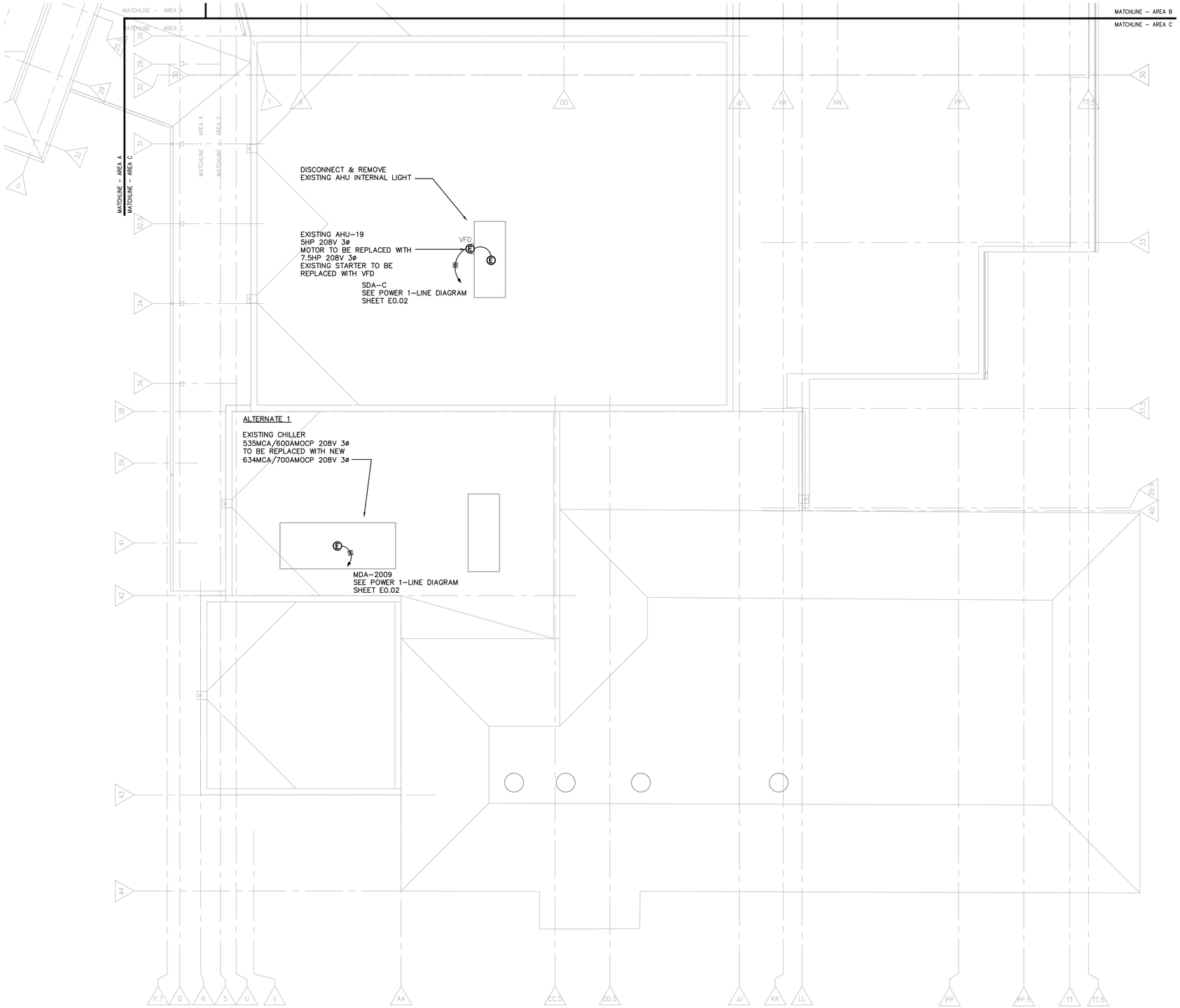

1 ELECTRICAL PLAN - ROOF AREA C
1/8" = 1'-0"

NEW WORK
EXISTING OR BY OTHERS
EXISTING TO BE REMOVED

1/8"=1'-0" 4' 0 4' 8' 12' 16' 20'
scale feet

REGISTERED PROFESSIONAL ENGINEER
16,727
OREGON
JULY 20, 1993
DOUGLAS A. BUHR
EXPIRES: 12-31-23

Date: 11/17/2022
Proj No: 10173
Drawn By: MKH
Chkd By: DAB
DSGN By: MKH
Acad File:

ASHLAND SD BELLVIEW ELEMENTARY SCHOOL
1070 TOLMAN CREEK ROAD
ASHLAND OREGON

Electrical Plan Roof Area C

MFIA INC.

Consulting Engineers
2007 S.E. Ash St.
Portland, OR 97214
PHN: (503) 234-0548
FAX: (503) 234-0677
WWW.MFIA-ENG.COM

BID & PERMIT SET

SHEET
E2.05
OF

Drawing name: C:\Douglas Engineering Pacific, Inc\Projects - 2021\21506 Bellview Elementary School\21506 e plans.dwg Nov 11, 2022 - 1:46pm

THIS DRAWING IS AN "INSTRUMENT OF SERVICE" AND IS COPYRIGHTED BY DOUGLAS ENGINEERING PACIFIC, INC. IT MAY NOT BE COPIED, REPRODUCED, SCANNED, ALTERED, OR USED IN ANY MANNER WITHOUT EXPRESS WRITTEN PERMISSION OF DOUGLAS ENGINEERING PACIFIC, INC. THIS WORK IS PART OF AN INTEGRATED PROCESS OF TECHNICAL DESIGN. USE OUTSIDE THIS PROCESS IS INAPPROPRIATE AND TRANSFER OF ITS OBSERVATIONS, CONCLUSIONS, OR METHODOLOGY TO ANY OTHER WORK MAY HAVE SERIOUS CONSEQUENCES.

Oregon Bureau of Labor and Industries

Prevailing Wage Rates for Public Works Contracts

Val Hoyle
Labor Commissioner
Rates Effective July 1, 2022

VAL HOYLE
Labor Commissioner

In this rate book are the new prevailing wage rates for Oregon non-residential public works projects, effective July 1, 2022.

Prevailing wage rates are the minimum hourly wages that must be paid to all workers employed on all public works projects. In the 2021 Legislative Session, the Legislature passed Senate Bill (SB) 493 which was signed by the Governor with the effective date of January 1, 2022. SB 493 amends state PWR law (ORS 279C.815) and provides that the prevailing rate of wage for each locality is the wage in the collective bargaining agreement that covers that occupation. If more than one collective bargaining agreement covers that occupation, the highest rate of wage among the collective bargaining agreements will prevail. Accordingly, the rates in this book are determined using wage information from current collective bargaining agreements for each trade and occupation for each of the 14 geographic regions of the state.

Thank you for your engagement in the process and commitment to Oregon law.

Our team is ready to help support you with any questions you have. We also offer regular, free informational seminars and webinars for contractors and public agencies. Contact us at PWR.Email@boli.oregon.gov or (971) 353-2416.

Val Hoyle
Labor Commissioner

More information about prevailing wage rates:

The Oregon Bureau of Labor & Industries publishes the prevailing wage rates (PWR) that are required to be paid to workers on non-residential Oregon public works projects.

A separate document, *Definitions of Covered Occupations for Public Works Contracts in Oregon,* provides occupational definitions used to classify the duties performed on public works projects. These definitions are used to find the correct prevailing wage rate.

The rate book and definition publications are available online at https://www.oregon.gov/boli as well as additional information and supporting documents and forms.

Please contact us at PWR.Email@boli.oregon.gov or (971) 353-2416, for additional information such as:

- Applicable prevailing wage rates for projects (Generally, the rates in effect at the time the bid specifications are first advertised are those that apply for the duration of the project.)
- Federal Davis-Bacon rates (In cases where projects are subject to both state PWR and federal Davis-Bacon rates, the higher wage must be paid.)
- Required PWR provisions for specifications and contracts
- Apprentice rates

TABLE OF CONTENTS

JULY 1, 2022

Required Postings for Contractors and Subcontractors **1**

Public Works Bonds **2**

Finding the Correct Prevailing Wage Rate **3**

Prevailing Wage Rates by Occupations **5**

List of Ineligible Contractors **26**

Forms necessary to comply with ORS 279C.800 through ORS 279C.870 can be found on our website at https://www.oregon.gov/boli/employers/Pages/prevailing-wage.aspx. Contractors are encouraged to use and keep on file the forms provided as master copies for use on future prevailing wage rate projects.

All of the information in this booklet can be accessed and printed from the Internet at: www.oregon.gov/BOLI

Pursuant to ORS 279C.800 to ORS 279C.870, the prevailing wage rates contained in this booklet have been adopted for use on public works contracts in Oregon.

Required Postings for Prevailing Wage Contractors and Subcontractors

PREVAILING WAGE RATES

Every contractor and subcontractor engaged in work on a public works must post the applicable prevailing wage rates for that project in an obvious place on the worksite so workers have ready access to the information.

DETAILS OF FRINGE BENEFIT PROGRAMS

When a contractor or subcontractor provides or contributes to a health and welfare plan or a pension plan, or both, for employees who are working on a public works project, the details of all fringe benefit plans or programs must be posted on the worksite.

The posting must include a description of the plan or plans, information about how and where claims can be made and where to obtain more information. The notice must be posted in an obvious place on the work site in the same location as the prevailing wage rates.

WORK SCHEDULE

Contractors and subcontractors must give workers the regular work schedule (days of the week and number of hours per day) in writing before beginning work on the project.

Contractors and subcontractors may provide the schedule at the time of hire, prior to starting work on the contract, or by posting the schedule in a location frequented by employees, along with the prevailing wage rate information and any fringe benefit information.

If an employer fails to give written notice of the worker's schedule, the work schedule will be presumed to be a five-day schedule. The schedule may only be changed if the change is intended to be permanent and is not designed to evade the PWR overtime requirements.

ORS 279C.840(4); OAR 839-025-0033(1). ORS 279C.840(5); OAR 839-025-0033(2). ORS 279C.540(2); OAR 839-025-0034.

PUBLIC WORKS BONDS

Every contractor and subcontractor who works on public works projects subject to the prevailing wage rate (PWR) law is required to file a $30,000 **"PUBLIC WORKS BOND"** with the Construction Contractors' Board (CCB). This includes flagging and landscaping companies, temporary employment agencies, and sometimes sole proprietors.

The key elements of ORS 279C.830(2) and ORS 279C.836 specify that:

- Specifications for every contract for public works must contain language stating that the contractor and every subcontractor must have a public works bond filed with the CCB before starting work on the project, unless otherwise exempt.
- Every contract awarded by a contracting agency must contain language requiring the contractor:
  - To have a public works bond filed with the CCB before starting work on the project, unless otherwise exempt; and
  - To include in every subcontract a provision requiring the subcontractor to have a public works bond filed with the CCB before starting work on the project unless otherwise exempt
- Every subcontract that a contractor or subcontractor awards in connection with a public works contract between a contractor and a public agency must require any subcontractor to have a public works bond filed with the CCB before starting work on the public works project, unless otherwise exempt.
- Before permitting a subcontractor to start work on a public works project, contractors must first verify their subcontractors either have filed the bond, or have elected not to file a public works bond due to a bona fide exemption.
- The PWR bond is to be used exclusively for unpaid wages determined to be due by the Bureau of Labor & Industries.
- The bond is in effect continuously (you do not have to have one per project).
- A public works bond is in addition to any other required bond the contractor or subcontractor is required to obtain.

Exemptions:

- Allowed for a disadvantaged business enterprise, a minority-owned business, woman-owned business, a business that a service-disabled veteran owns or an emerging small business certified under ORS 200.055, for the first FOUR years of certification;
  - Exempt contractor must still file written verification of certification with the CCB, and give the CCB written notice that they elect not to file a bond.
  - The prime contractor must give written notice to the public agency that they elect not to file a public works bond.
  - Subcontractors must give written notice to the prime contractor that they elect not to file a public works bond.
- For projects with a total project cost of $100,000 or less, a public works bond is not required. (Note this is the total project cost, not an individual contract amount.)
- Emergency projects, as defined in ORS 279A.010(f).

PREVAILING WAGE RATES

FINDING THE CORRECT PREVAILING WAGE RATE

To find the correct rate(s) required on your public works project, you will need:

- the date the project was first advertised for bid
- the county your project is in
- the duties of workers on the job

Generally, the rate you should look for is based on the date the project was first advertised for bid. (See OAR 839-025-0020(8) for information about projects that contract through a CM/GC, or contract manager/general contractor.)

The Labor Commissioner must establish the prevailing rate of wage for each region as defined in law. (See ORS 279C.800.) Each region is comprised of one to five counties. See below instructions on locating the correct prevailing wage rate for your public works project.

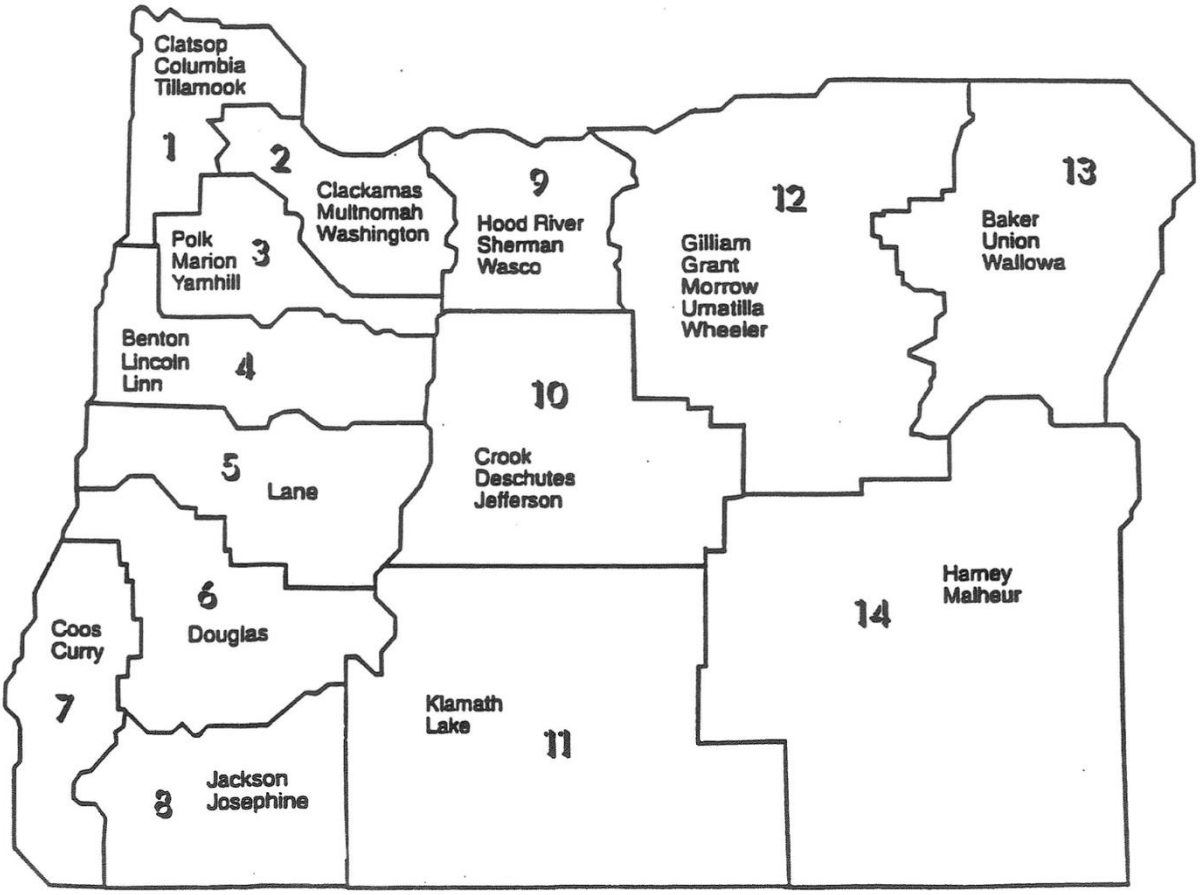

To find the correct rate in this rate book:

1. *Determine the duties that are being performed by each worker.* Use the booklet *Definitions of Covered Occupations* to find the definition that most closely matches the actual work performed by the worker. You can find this publication online at https://www.oregon.gov/boli/employers/Pages/occupational-definitions.aspx.

2. *Find the correct occupation in the "Prevailing Wage Rate for Public Works Contracts" below.* The prevailing wage rate is made up of an hourly base rate and an hourly fringe rate. The combination of these two amounts must be paid to each worker. Watch for possible zone differential, shift differential, and/or hazard pay. If the occupation lists different rates for different Areas of the state, locate the Area that includes the county where the project is located.

Apprentices must be paid consistent with their registered apprenticeship program standard. You can find apprenticeship rates on our website at https://www.oregon.gov/boli/employers/Pages/prevailing-wage-rates.aspx. You may also contact the agency to confirm the correct apprenticeship rate.

The "Prevailing Wage Rate Laws" handbook provides specific information and answers questions regarding prevailing wage laws and is available on our website at https://www.oregon.gov/boli/employers/Pages/prevailing-wage.aspx.

If you have any questions about any of this information, please contact the Bureau of Labor & Industries at PWR.Email@boli.oregon.gov or (971) 353-2416.

July 1, 2022

Prevailing Wage Rates by Occupations—Table of Contents

Using the booklet, Definitions of Covered Occupations, find the definition and group number, if applicable, that most closely matches the actual work being performed by the worker.

Asbestos Worker/Insulator 6
Boilermaker 6
Bricklayer/Stonemason 6
Bridge and Highway Carpenter (See Carpenter Group 5) 6
Carpenter 6
Cement Mason 7
Diver 8
Diver Tender 8
Dredger 9
Drywall, Lather, Acoustical Carpenter & Ceiling Installer 9
Drywall Taper (See Painter & Drywall Taper) 17
Electrician 10
Elevator Constructor, Installer and Mechanic 13
Fence Constructor (Non-Metal) 13
Fence Erector (Metal) 13
Flagger (Laborer Group 3) 14
Glazier 13
Hazardous Materials Handler 14
Highway/Parking Striper 14
Ironworker 14
Laborer 14
Landscape Laborer/Technician 15
Limited Energy Electrician 15
Line Constructor 16
Marble Setter 16
Millwright Group 1 (See Carpenter Group 3) 6
Painter & Drywall Taper 16
Piledriver (See Carpenter Group 6) 6
Plasterer and Stucco Mason 17
Plumber/Pipefitter/Steamfitter 18
Power Equipment Operator 19
Roofer 21
Sheet Metal Worker 22
Soft Floor Layer 23
Sprinkler Fitter 23
Tender to Mason Trades (Brick and Stonemason, Mortar Mixer, Hod Carrier) 23
Tender to Plasterer and Stucco Mason 24
Testing and Balancing (TAB) Technician 24
Tile Setter/Terrazzo Worker: Hard Tile Setter 24
Tile, Terrazzo, and Marble Finisher 24
Truck Driver 25

ASBESTOS WORKER/INSULATOR	**57.17**	**23.02**
Firestop Containment	**42.38**	**16.69**
BOILERMAKER	**40.46**	**30.59**
BRICKLAYER/STONEMASON	**43.00**	**24.25**

This trade is tended by "Tenders to Mason Trades."

Add $1.00 per hour to base rate for refractory repair work.

CARPENTER

Zone A (Base Rate)

Group 1	**44.80**	**19.21**
Group 2	**44.97**	**19.21**
Group 3	**50.24**	**19.21**
Group 4	**Eliminated**	
Group 5	**45.40**	**19.21**
Group 6	**45.74**	**19.21**

Zone Differential for Carpenters
Add to Zone A Base Rate

Zone B	**1.25** per hour
Zone C	**1.70** per hour
Zone D	**2.00** per hour
Zone E	**3.00** per hour
Zone F	**5.00** per hour
Zone G	**10.00** per hour

Zone A: Projects located within 30 miles of the respective city hall of the cities listed.
Zone B: More than 30 miles but less than 40 miles.
Zone C: More than 40 miles but less than 50 miles.
Zone D: More than 50 miles but less than 60 miles.
Zone E: More than 60 miles but less than 70 miles.
Zone F: More than 70 miles but less than 100 miles.
Zone G: More than 100 miles.

Reference Cities for Group 1 and 2 Carpenters

Albany	Goldendale	Madras	Roseburg
Astoria	Grants Pass	Medford	Salem
Baker City	Hermiston	Newport	The Dalles
Bend	Hood River	Ontario	Tillamook
Brookings	Klamath Falls	Pendleton	Vancouver
Burns	La Grande	Portland	
Coos Bay	Lakeview	Port Orford	
Eugene	Longview	Reedsport	

Reference Cities for Group 3 Carpenters

Eugene	Medford	Portland	Vancouver
Longview	North Bend	The Dalles	

CARPENTER (continued)

Reference Cities for Group 5 and 6 Carpenters

Bend	Longview	North Bend
Eugene	Medford	Portland

Zones for **Group 6** Carpenter are determined by the distance between the project site and **either**

1) The worker's residence; ***or***

2) City Hall of a reference city listed, whichever is closer.

Note: All job or project locations shall be computed (determined) on the basis of road miles and in the following manner. A mileage measurement will start at the entrance to the respective city hall, facing the project (if possible), and shall proceed by the normal route (shortest time--best road via Google Maps) to the geographical center on the highway, railroad, and street construction projects (end of measurement). On all project contracts, the geographical center where the major portion of the construction is located, shall be considered the center of the project (end measurement).

Group 2, 5 and 6:
Welders shall receive a 5% premium per hour based on their Group's journeyman wage rate, with an 8-hour minimum.

Group 1 and 3:
When working with toxic treated wood, workers shall receive $.25/hour premium pay for minimum of eight (8) hours.

Group 5 and 6:
When working with creosote and other toxic treated wood, workers shall receive $.25/hour premium pay for minimum of eight (8) hours.

Group 6:
When working in sheet pile coffer dams or cells up to the external water level, workers shall receive $.15/hour premium pay for minimum of eight (8) hours.

CEMENT MASON
This trade is tended by "Concrete Laborer."

Group 1	**39.97**	**21.17**
Group 2	**40.81**	**21.17**
Group 3	**40.81**	**21.17**
Group 4	**41.64**	**21.17**

Zone Differential for Cement Mason
Add to Basic Hourly Rate

Zone A	**3.00** per hour
Zone B	**5.00** per hour
Zone C	**10.00** per hour

Zone A: Projects located 60-79 miles of the respective city hall of the Reference Cities listed below.
Zone B: Projects located 80-99 miles of the respective city hall of the Reference Cities listed below.
Zone C: Projects located 100 or more miles of the respective city hall of the Reference Cities listed below.

Reference Cities for Cement Mason

Bend	Eugene	Pendleton	Salem	Vancouver
Corvallis	Medford	Portland	The Dalles	

When a contractor takes current employees to a project that is located more than 59 miles from the city hall of the Reference City that is closest to the contractor's place of business, Zone Pay is to be paid for the distance between the city hall of the identified Reference City and the project site.

CEMENT MASON (continued)

Note: All miles are to be determined on the basis of road miles using the normal route (shortest time – best road), from the city hall of the Reference City closest to the contractor's place of business and the project.

DIVER & DIVER TENDER

Zone 1 (Base Rate)

DIVER	**95.32**	**19.21**
DIVER TENDER	**51.32**	**19.21**

1) For those workers who reside within a reference city below, their zone pay shall be computed from the city hall of the city wherein they reside.

2) For those workers who reside nearer to a project than is the city hall of any reference city below, the mileage from their residence may be used in computing their zone pay differential.

3) The zone pay for all other projects shall be computed from the city hall of the nearest reference city listed below.

Zone Differential for Diver/Diver Tender
Add to Zone 1 Base Rate

Zone 2	**1.25** per hour
Zone 3	**1.70** per hour
Zone 4	**2.00** per hour
Zone 5	**3.00** per hour
Zone 6	**5.00** per hour
Zone 7	**10.00** per hour

Zone 1: Projects located within 30 miles of city hall of the reference cities listed.
Zone 2: More than 30 miles, but less than 40 miles.
Zone 3: More than 40 miles, but less than 50 miles.
Zone 4: More than 50 miles, but less than 60 miles.
Zone 5: More than 60 miles, but less than 70 miles.
Zone 6: More than 70 miles, but less than 100 miles.
Zone 7: More than 100 miles.

Reference Cities for Diver/Diver Tender

Bend	Longview	North Bend
Eugene	Medford	Portland

Note: All job or project locations shall be computed (determined) on the basis of road miles and in the following manner. A mileage measurement will start at the entrance to the respective city hall, facing the project (if possible), and shall proceed by the normal route (shortest time--best road via Google Maps) to the geographical center on the highway, railroad, and street construction projects (end of measurement). On all project contracts, the geographical center where the major portion of the construction is located, shall be considered the center of the project (end measurement).

Diver Depth Pay:

Depth Below Water Surface (FSW)	Daily Depth Pay
50-100 ft.	$2.00 per foot over 50 feet
101-150 ft.	$3.00 per foot over 100 feet
151-220 ft.	$4.00 per foot over 150 feet
Over 220 ft.	$5.00 per foot over 220 feet

The actual depth in FSW shall be used in determining depth premium.

See Diver Enclosure Pay on page 9

DIVER & DIVER TENDER (continued)

Diver Enclosure Pay (working without vertical escape):

Distance Traveled in the Enclosure	Daily Enclosure Pay
0 – 25ft.	N/C
25 – 300 ft.	$1.00 per foot from the entrance
300 – 600 ft.	$1.50 per foot beginning at 300 ft.
Over 600 ft.	$2.00 per foot beginning at 600 ft.

DREDGER

Zone A (Base Rate)

Leverman (Hydraulic & Clamshell)	**51.46**	**16.15**
Assistant Engineer (Watch Engineer, Mechanic Machinist)	**48.30**	**16.15**
Tenderman (Boatman Attending Dredge Plant), Fireman	**46.81**	**16.15**
Fill Equipment Operator	**45.64**	**16.15**
Assistant Mate	**42.94**	**16.15**

Zone Differential for Dredgers
Add to Zone A Base Rate

Zone B **3.00** per hour
Zone C **6.00** per hour

Zone mileage based on road miles:

Zone A: Center of jobsite to no more than 30 miles from the city hall of Portland.
Zone B: More than 30 miles but not more than 60 miles.
Zone C: Over 60 miles.

DRYWALL, LATHER, ACOUSTICAL CARPENTER & CEILING INSTALLER

Zone 1 (Base Rate)

1. DRYWALL INSTALLER	**44.74**	**18.91**
2. LATHER, ACOUSTICAL CARPENTER & CEILING INSTALLER	**44.74**	**18.91**

Zone Differential for Lather, Acoustical Carpenter & Ceiling Installer

Zone mileage based on road miles:

Zone B	61-80 miles	**6.00** per hour
Zone C	81-100 miles	**9.00** per hour
Zone D	101 or more	**12.00** per hour

The correct transportation allowance shall be based on AAA road mileage from the City Hall of the transportation reference cities herein listed.

See reference cities for zone differential on page 10

DRYWALL, LATHER, ACOUSTICAL CARPENTER & CEILING INSTALLER (continued)

Reference Cities for Drywall, Lather, Acoustical Carpenter & Ceiling Installer

Albany	Bend	Grants Pass	Medford	Portland	Seaside
Astoria	Brookings	Hermiston	Newport	Reedsport	The Dalles
Baker	Coquille	Klamath Falls	North Bend	Roseburg	Tillamook
Bandon	Eugene	Kelso-Longview	Pendleton	Salem	Vancouver

Certified welders shall receive 5% over the base wage rate, with an eight (8) hour minimum.

ELECTRICIAN

Area 1 (Region 14)

Electrician	**40.97**	**18.58**
Lighting Maintenance and Material Handler	**19.95**	**10.00**

Reference County

Malheur

Shift Differential

1st Shift "day"	Between the hours of 8:00am and 4:30pm	8 hours pay for 8 hours work
2nd Shift "swing"	Between the hours of 4:30pm and 12:30am	8 hours pay for 8 hours work plus 7.5% for all hours worked
3rd Shift "graveyard"	Between the hours of 12:30am and 8:00am	8 hours pay for 8 hours work plus 15% for all hours worked.

When workers are required to work under compressed air or to work from trusses, scaffolds, swinging scaffolds, bosun's chair or on building frames, stacks or towers at a distance, the following should be added to base rate.

50 – 90 feet to the ground	Add 1 ½ x the base rate
90+ feet to the ground	Add 2 x the base rate

Pursuant to ORS 279C.815(2)(b), the Electrician Area 6 rate is the highest rate of wage among the collective bargaining agreements for Electrician Areas 1 and 6.

Area 2 (Regions 12 and 13)

Electrician	**51.75**	**24.18**
Cable Splicer	**54.34**	**24.26**
Certified Welder	**56.93**	**24.34**
Material Handler	**31.05**	**13.06**

Reference Counties

Baker	Grant	Umatilla	Wallowa
Gilliam	Morrow	Union	Wheeler

Add 50% of the base rate when workers are required to work under the following conditions:

1) Under compressed air with atmospheric pressure exceeding normal pressure by at least 10%.

2) From trusses, swing scaffolds, bosun's chairs, open platforms, unguarded scaffolds, open ladders, frames, tanks, stacks, silos and towers where the workman is subject to a direct fall of (a) more than 60 feet or (b) into turbulent water under bridges, powerhouses or spillway faces of dams.

ELECTRICIAN (continued)

Area 3 (Regions 4, 5, 6 and 7)

Electrician	**43.97**	**22.81**

Reference Counties

Coos Curry Douglas

Lane – **See Area 4** Lincoln – **See Area 4**

Shift Differential

1st Shift "day"	Between the hours of 8:00am and 4:30pm	8 hours pay for 8 hours work
2nd Shift "swing"	Between the hours of 4:30pm and 1:00am	8 hours pay for 8 hours work plus 17% for all hours worked
3rd Shift "graveyard"	Between the hours of 12:30am and 9:00am	8 hours pay for 8 hours work plus 31% for all hours worked.

When workers are required to work under compressed air or where gas masks are required, or to work from trusses, all scaffolds including mobile elevated platforms, any temporary structure, bosun's chair or on frames, stacks, towers, tanks, within 15' of the leading edges of any building at a distance of:

50 – 75 feet to the ground	Add 1 ½ x the base rate
75+ feet to the ground	Add 2 x the base rate

High Time is not required to be paid on any permanent structure with permanent adequate safeguards (handrails, mid-rails, and toe guards). Any vehicle equipped with outriggers are exempted from this section.

Area 4 (Regions 3, 4, 5, and 10)

Electrician	**49.36**	**20.20**
Cable Splicer	**54.30**	**20.35**
Lighting Maintenance/Material Handler	**22.67**	**10.08**

Reference Counties for Area 4

Benton Deschutes Lane Lincoln
Crook Jefferson Linn

Marion – **See Area 5 rate** Polk – **See Area 5 rate** Yamhill – **See Area 5 rate**

Shift Differential

1st Shift "day"	Between the hours of 8:00am and 4:30pm	8 hours pay for 8 hours work
2nd Shift "swing"	Between the hours of 4:30pm and 1:00am	8 hours pay for 8 hours work plus 17% for all hours worked
3rd Shift "graveyard"	Between the hours of 12:30am and 9:00am	8 hours pay for 8 hours work plus 31.4% for all hours worked.

ELECTRICIAN (continued)

Area 5 (Regions 1, 2, 3 and 9)

Electrician	**53.85**	**27.84**
Electrical Welder	**59.24**	**28.00**
Material Handler/Lighting Maintenance	**30.69**	**19.62**

Reference Counties

Clackamas	Hood River	Polk	Wasco
Clatsop	Marion	Sherman	Washington
Columbia	Multnomah	Tillamook	Yamhill

Shift Differential

1st Shift "day"	Between the hours of 7:00am and 5:30pm	8 hours pay for 8 hours work
2nd Shift "swing"	Between the hours of 4:30pm and 3:00am	8 hours pay for 8 hours work plus 17.3% for all hours worked
3rd Shift "graveyard"	Between the hours of 12:30am and 11:00am	8 hours pay for 8 hours work plus 31.4% for all hours worked.

Zone Pay for Area 5 – **Electrician and Electrical Welder**
Add to Basic Hourly Rate

Zone mileage based on air miles:

Zone 1	31-50 miles	**1.50** per hour
Zone 2	51-70 miles	**3.50** per hour
Zone 3	71-90 miles	**5.50** per hour
Zone 4	Beyond 90	**9.00** per hour

There shall be a 30-mile free zone from downtown Portland City Hall and a similar 15-mile free zone around the following cities:

Astoria	Seaside	Tillamook
Hood River	The Dalles	

Further, the free zone at the Oregon coast shall extend along Hwy 101 west to the ocean Hwy 101 east 10 miles if not already covered by the above 15-mile free zone.

Area 6 (Regions 6, 8, 11 and 14)

Electrician	**40.97**	**18.58**
Lighting Maintenance and Material Handler	**19.95**	**10.00**

Reference Counties

Harney	Josephine	Lake
Jackson	Klamath	Malheur

Douglas – **See Area 3 rate**

See shift differential on page 13

ELECTRICIAN (continued)

Shift Differential

1st Shift "day"	Between the hours of 8:00am and 4:30pm	8 hours pay for 8 hours work
2nd Shift "swing"	Between the hours of 4:30pm and 1:00am	8 hours pay for 8 hours work plus 7.5% for all hours worked
3rd Shift "graveyard"	Between the hours of 12:30am and 9:00am	8 hours pay for 8 hours work plus 15% for all hours worked.

When workers are required to work under compressed air or to work from trusses, scaffolds, swinging scaffolds, bosun's chair or on building frames, stacks or towers at a distance, the following should be added to base rate.

50 – 90 feet to the ground	Add 1 ½ x the base rate
90+ feet to the ground	Add 2 x the base rate

ELEVATOR CONSTRUCTOR, INSTALLER AND MECHANIC

Area 1 (Regions 12 and 13)

Mechanic	**59.70**	**43.48**

Reference Counties

Baker Union Wallowa

Umatilla – **See Area 2 rate**

Area 2 (Regions 1, 2, 3, 4, 5, 6, 7, 8, 9, 10, 11, 12, and 14)

Mechanic	**59.95**	**43.68**

Reference Counties

Benton	Douglas	Klamath	Multnomah	Deschutes
Clackamas	Gilliam	Lake	Polk	Josephine
Clatsop	Grant	Lane	Sherman	Morrow
Columbia	Harney	Lincoln	Tillamook	Wheeler
Coos	Hood River	Linn	Umatilla	Yamhill
Crook	Jackson	Malheur	Wasco	
Curry	Jefferson	Marion	Washington	

FENCE CONSTRUCTOR (NON-METAL)	**34.98**	**16.55**
FENCE ERECTOR (METAL)	**34.98**	**16.55**
GLAZIER	**44.43**	**25.09**

Add $1.00 to base rate when employee works from a swing stage, scaffold, suspended contrivance or mechanical apparatus from the third floor up or thirty feet of free fall (whichever is less), and employee is required to wear a safety belt.

Add twenty percent (20%) to base rate when employee works from a bosun chair (non-motorized single-man apparatus), regardless of height.

Certified welders shall receive twenty percent (20%) above the base rate for actual time spent performing welding duties.

HAZARDOUS MATERIALS HANDLER	**28.03**	**14.18**
HIGHWAY/PARKING STRIPER	**38.18**	**15.08**

Shift Differential
Add $1.85/hour to base rate for shifts that start between 3:00pm and 4:00am.

IRONWORKER

Zone 1 (Base Rate):	**41.13**	**30.72**

Zone Differential for Ironworker
Add to Basic Hourly Rate

Zone 2 **5.63/**hr. or $45.00 maximum per day
Zone 3 **8.75**/hr. or $70.00 maximum per day
Zone 4 **11.25/**hr. or $90.00 maximum per day

Zone 1: Projects located within 45 miles of city hall in the reference cities listed below.
Zone 2: More than 46 miles, but less than 60 miles.
Zone 3: More than 61 miles, but less than 100 miles.
Zone 4: More than 100 miles.

Note: Zone pay for Ironworkers shall be determined using the quickest route per Google Maps and computed from the city hall or dispatch center of the reference cities listed below **or** the residence of the employee, whichever is nearer to the project.

Reference Cities and Dispatch Center

Medford Portland

LABORER

Zone A (Base Rate):

Group 1	**34.98**	**16.55**
Group 2	**36.25**	**16.55**
Group 3 (Flagger)	**30.38**	**16.55**
Group 4 (Landscape Laborer)	**24.17**	**16.55**

Zone Differential for Laborers
Add to Zone A Base Rate

Zone B **.85** per hour
Zone C **1.25** per hour
Zone D **2.00** per hour
Zone E **4.00** per hour
Zone F **5.00** per hour

Zone A: Projects located within 30 miles of city hall in the reference cities listed.
Zone B: More than 30 miles but less than 40 miles.
Zone C: More than 40 miles but less than 50 miles.
Zone D: More than 50 miles but less than 80 miles.
Zone E: More than 80 miles but less than 100 miles.
Zone F: More than 100 miles.

See reference cities for zone differential page 15

LABORER (continued)

Reference Cities for Laborer

Albany	Burns	Hermiston	Roseburg
Astoria	Coos Bay	Klamath Falls	Salem
Baker City	Eugene	Medford	The Dalles
Bend	Grants Pass	Portland	

Note: All job or project locations shall be computed (determined) on the basis of road miles and in the following manner. A mileage measurement will start at the entrance to the respective city hall, facing the project (if possible), and shall proceed by the normal route (shortest time, best road) to the geographical center on the highway, railroad, and street construction projects (end of measurement). On all other project contracts, the geographical center where the major portion of the construction is located, shall be considered the center of the project (end measurement).

Any Laborer working in Live Sewers shall receive forty dollars ($40) per day in addition to their regular pay.

LANDSCAPE LABORER/TECHNICIAN (Laborer Group 4)	**24.17**	**16.55**

LIMITED ENERGY ELECTRICIAN

Area 1 (Region 14)	**33.76**	**14.26**

Reference County

Malheur

Pursuant to ORS 279C.815(2)(b), the Limited Energy Electrician Area 6 rate is the highest rate of wage among the collective bargaining agreements for Limited Energy Electrician Areas 1 and 6.

Area 2 (Regions 12 and 13)	**33.19**	**15.16**

Reference Counties

Baker	Grant	Umatilla	Wallowa
Gilliam	Morrow	Union	Wheeler

Area 3 (Regions 4, 5, 6 and 7)	**33.42**	**20.14**

Reference Counties

Benton	Curry	Lane	Linn
Coos	Douglas	Lincoln	

Area 4 (Regions 3, 4, 5 and 10)	**36.17**	**17.26**

Reference Counties

Benton	Jefferson	Linn
Crook	Lane	Lincoln
Deschutes		

Benton – **See Area 3 rate**	Linn – **See Area 3 rate**	Polk – **See Area 5 rate**
Lane – **See Area 3 rate**	Marion – **See Area 5 rate**	Yamhill – **See Area 5 rate**

LIMITED ENERGY ELECTRICIAN (continued)

Area 5 (Regions 1, 2, 3 and 9)	**44.23**	**22.30**

Reference Counties

Clackamas	Hood River	Polk	Wasco
Clatsop	Marion	Sherman	Washington
Columbia	Multnomah	Tillamook	Yamhill

Area 6 (Regions 6, 8, 11 and 14)	**33.76**	**14.26**

Reference Counties

Harney	Josephine	Lake
Jackson	Klamath	Malheur

Douglas – **See Area 3 rate**

LINE CONSTRUCTOR

Area 1 (All Regions)

Group 1	**64.58**	**23.24**
Group 2	**57.66**	**23.13**
Group 3	**33.05**	**15.49**
Group 4	**49.59**	**19.69**
Group 5	**43.25**	**16.85**
Group 6	**35.75**	**16.62**
Group 7	**19.24**	**12.42**

Reference Counties

All counties

Pursuant to ORS 279C.815(2)(b), the Line Constructor Area 1 rate is the highest rate of wage among the collective bargaining agreements for Line Constructor Area 1 and Area 2.

MARBLE SETTER	**44.00**	**24.25**

This trade is tendered by “Tile, Terrazzo, & Marble Finishers.”

Add $1.00 per hour to base rate for refractory repair work.

PAINTER & DRYWALL TAPER

COMMERCIAL PAINTING	**30.72**	**14.18**
INDUSTRIAL PAINTING	**32.52**	**14.18**
BRIDGE PAINTING	**38.19**	**14.18**

Shift Differential for Painter
Add $2.00/hour to base rate for entire shift if any hours are worked outside of 5:00 a.m. to 5:00 p.m.

See Drywall Taper on page 17.

PAINTER & DRYWALL TAPER (continued)

DRYWALL TAPER

Zone A (Base Rate	**42.52**	**19.13**

Zone Differential for Drywall Taper
Add to Zone A Base Rate

Zone B **6.00** per hour
Zone C **9.00** per hour
Zone D **12.00** per hour

Dispatch Cities for Drywall Taper

Albany	Bend	Grants Pass	Medford	Portland	Seaside
Astoria	Brookings	Hermiston	Newport	Reedsport	The Dalles
Baker	Coquille	Klamath Falls	North Bend	Roseburg	Tillamook
Bandon	Eugene	Kelso-Longview	Pendleton	Salem	Vancouver

Zone A: Projects located less than 61 miles of the respective city hall of the dispatch cities listed.
Zone B: Projects located 61 miles to 80 miles.
Zone C: Projects located 81 miles to 100 miles.
Zone D: Projects located 101 miles or more.

Note: Zone pay is based on AAA Road Mileage.

PLASTERER AND STUCCO MASON

This trade is tended by "Tenders to Plasterers."

Zone A (Base Rate)	**41.16**	**19.23**

Zone Differential for Plasterer and Stucco Mason
Add to Zone A Base Rate

Zone B **6.00** per hour
Zone C **9.00** per hour
Zone D **12.00** per hour

Zone A: Projects located less than 61 miles of the respective city hall of the reference cities listed below.
Zone B: Projects located 61 miles to 80 miles.
Zone C: Projects located 81 miles to 100 miles.
Zone D: Projects located 101 miles or more.

Reference Cities for Plasterer & Stucco Mason

Bend	Eugene	Medford	Portland	Seaside
Coos Bay	La Grande	Newport	Salem	The Dalles

Add $1.00 to base rate for swinging scaffold work.

Add $2.00 to base rate for nozzle technicians on plastering machines.

PLUMBER/PIPEFITTER/STEAMFITTER

Area 1 (Regions 13 and 14) **34.00** **17.07**

Reference Counties

Harney Malheur

Baker – **See Area 2 rates**

Zone Differential for Area 1
Add to Base Rate
Zone 1 **2.50** per hour
Zone 2 **3.50** per hour
Zone 3 **5.00** per hour

Zone mileage based on road miles:
Zone 1: Forty (40) to fifty five (55) miles from City Hall in Boise, Idaho.
Zone 2: Fifty five (55) to one hundred (100) miles from City Hall in Boise, Idaho.
Zone 3: Over one hundred (100) miles from City Hall in Boise, Idaho.

Add $2.21 to base rate if it is possible for worker to fall 30 ft. or more, or if required to wear a fresh-air mask or similar equipment for 2 hours or more.

Area 2 (Regions 12 and 13) **54.00** **34.11**

Reference Counties

Baker	Grant	Umatilla	Wallowa
Gilliam	Morrow	Union	Wheeler

Zone Differential for Area 2
Add to Base Rate

Zone 2 **10.62/**hr. not to exceed $80.00 day.

Zone 2: Eighty (80) miles or more from City Hall in Pasco, Washington.

Zone mileage based on road miles:

Add $1.00 to base rate in one-hour minimum increments if it is possible for worker to fall 35 ft. or more.

Add $1.00 to base rate in one-hour minimum increments if worker is required to wear a mask in hazardous areas.

Area 3 (Regions 1, 2, 3, 4, 5, 6, 7, 8, 9, 10, 11 and 12) **50.68** **35.00**

Reference Counties

Benton	Deschutes	Lake	Sherman
Clackamas	Douglas	Lane	Tillamook
Clatsop	Hood River	Lincoln	Wasco
Columbia	Jackson	Linn	Washington
Coos	Jefferson	Marion	Yamhill
Crook	Josephine	Multnomah	
Curry	Klamath	Polk	

Gilliam – **See Area 2 rate** Wheeler – **See Area 2 rate**

POWER EQUIPMENT OPERATOR

Zone 1 (Base Rate)		
Group 1	**51.65**	**16.35**
Group 1A	**53.81**	**16.35**
Group 1B	**55.97**	**16.35**
Group 2	**49.74**	**16.35**
Group 3	**48.59**	**16.35**
Group 4	**45.26**	**16.35**
Group 5	**44.02**	**16.35**
Group 6	**40.80**	**16.35**

POWER EQUIPMENT OPERATOR MAP

Zone Pay Differential for Power Equipment Operator
Add to Zone 1 Base Rate

Zone 2	**3.00** per hour
Zone 3	**6.00** per hour

For projects in the following metropolitan counties:

Clackamas	Marion	Washington
Columbia	Multnomah	Yamhill

POWER EQUIPMENT OPERATOR (continued)

(A) All jobs or projects located in Multnomah, Clackamas and Marion counties, West of the western boundary of Mt. Hood National Forest and West of Mile Post 30 on Interstate 84 and West of Mile Post 30 on State Hwy 26 and West of Mile Post 30 on Hwy 22 and all jobs located in Yamhill County, Washington County and Columbia County shall receive Zone 1 pay for all classifications.

(B) All jobs or projects located in the area outside the *identified boundary* above, but less than 50 miles from the Portland City Hall shall receive Zone 2 pay for all classifications.

(C) All jobs or projects located more than 50 miles from the Portland City Hall, but outside the identified border above, shall receive Zone 3 pay for all classifications.

Reference cities for projects in all remaining counties:

Albany	Coos Bay	Grants Pass	Medford
Bend	Eugene	Klamath Falls	Roseburg

(A) All jobs or projects located within 30 miles of the respective city hall of the above mentioned cities shall receive Zone 1 pay for all classifications.

(B) All jobs or projects located more than 30 miles and less than 50 miles from the respective city hall of the above mentioned cities shall receive Zone 2 for all classifications.

(C) All jobs or projects located more than 50 miles from the respective city hall of the above mentioned cities shall receive Zone 3 pay for all classifications.

Note: All job or project locations shall be computed (determined) on the basis of road miles and in the following manner. A mileage measurement will start at the entrance to the respective city hall, facing the project (if possible), and shall proceed by the normal route (shortest time-best road) to the geographical center on the highway, railroad, and street construction projects (end of measurement). On all other project contracts, the geographical center where the major portion of the construction is located, shall be considered the center of the project (end measurement).

Add $10.00/hour hyperbaric pay for Group 4 Tunnel Boring Machine Mechanic.

Add $0.40 to the base rate for any and all work performed underground, including operating, servicing and repairing of equipment.

Add $0.50 to the base rate per hour for any employee who works suspended by a rope or cable.

Add $0.50 to the base rate for employees who do “pioneer” work (break open a cut, build road, etc.) more than one hundred fifty (150) feet above grade elevation.

Note: A Hazardous Waste Removal Differential must be added to the base rate if work is performed inside the boundary of a Federally Designated Waste Site. For information on this differential, call the Prevailing Wage Rate Coordinator at (971) 353-2416.

Shift Differential

Two-Shift Operations:

On a two-shift operation, when the second shift starts after 4:30 p.m., second-shift workers shall be paid the base hourly wage rate plus 5% for all hours worked.

When the second shift starts at 8:00 p.m. or later, the second-shift workers shall be paid at the base hourly wage rate plus 10% for all hours worked.

Three-Shift Operations:

On a three-shift operation, the base hourly wage rate plus five percent (5%) shall be paid to all second-shift workers for all hours worked, and the base hourly wage rate plus ten percent (10%) shall be paid to all third shift workers for all hours worked.

ROOFER

Area 1 (Regions 1, 2, 9, 10, 12 and 13) **38.78** **20.48**

Reference Counties

Baker	Deschutes	Morrow	Union
Clackamas	Gilliam	Multnomah	Wasco
Clatsop	Grant	Sherman	Wallowa
Columbia	Hood River	Tillamook	Washington
Crook	Jefferson	Umatilla	Wheeler

Add 10% to the base rate for handling coal tar pitch or coal tar based materials.

Add 10% to the base rate for handling fiberglass insulation.

Area 2 (Regions 3, 4, 5, 6, 7, 8, 10, 11 and 14) **32.55** **18.65**

Reference Counties

Benton	Harney	Lake	Malheur
Coos	Jackson	Lane	Marion
Curry	Josephine	Lincoln	Polk
Douglas	Klamath	Linn	Yamhill

Crook – **See Area 1 rates** Deschutes – **See Area 1 rates**

Add $2.00 to the base rate for handling coal tar products.

Add $1.50 to the base rate for handling fiberglass insulation.

Area 4 (Regions 12 and 13) **38.78** **20.48**

Reference Counties

Umatilla	Union	Wallowa

Pursuant to ORS 279C.815(2)(b), the Roofer Area 1 rate is the highest rate of wage among the collective bargaining agreements for Roofer Areas 1, 4 and 5.

Add 10% to the base rate for handling coal tar pitch or coal tar based materials.

Add 10% to the base rate for handling fiberglass insulation.

Area 5 (Region 12) **38.78** **20.48**

Reference County

Morrow

Pursuant to ORS 279C.815(2)(b), the Roofer Area 1 rate is the highest rate of wage among the collective bargaining agreements for Roofer Areas 1, 4 and 5.

Add 10% to the base rate for handling coal tar pitch or coal tar based materials.

Add 10% to the base rate for handling fiberglass insulation.

SHEET METAL WORKER

Area 1 (Regions 1, 2, 3, 4, 9 and 12)	**45.80**	**25.46**

Reference Counties

Benton	Grant	Morrow	Umatilla
Clackamas	Hood River	Multnomah	Wasco
Clatsop	Lincoln	Polk	Washington
Columbia	Linn	Sherman	Wheeler
Gilliam	Marion	Tillamook	Yamhill

Add $1.00 to base rate for work performed on any swinging platform, swinging chair or swinging ladder.

Add $1.00 to base rate for work where a worker is exposed to resins, chemicals or acid.

Area 2 (Regions 13 and 14)	--------	--------

Reference Counties

Baker – **See Area 3 rate** Malheur – **See Area 6 rate**

Area 3 (Regions 12 and 13)	**44.09**	**25.28**

Reference Counties

Baker Union Wallowa

Morrow – **See Area 1 rate** Umatilla – **See Area 1 rate**

Add $.45 to base rate for work performed on any swinging stage, swinging scaffold or boson chair in excess of thirty (30) feet above the ground.

Add $1.00 to base rate for work where it is necessary to wear a chemically activated type face mask.

Area 4 (Regions 5 and 6)	**37.78**	**22.72**

Reference Counties

Douglas Lane

Add $1.00 to base rate for work performed on any swinging platform, swinging chair or swinging ladder.

Add $1.00 to base rate for work where a worker is exposed to resins, chemicals or acid.

Area 5 (Region 7)	**38.14**	**23.76**

Reference Counties

Coos Curry

Add $1.00 to base rate for work performed on any swinging platform, swinging chair or swinging ladder.

Add $1.00 to base rate for work where a worker is exposed to resins, chemicals or acid.

SHEET METAL WORKER (continued)

Area 6 (Regions 7, 8, 11 and 14)	**32.12**	**21.39**

Reference Counties

Harney	Josephine	Lake
Jackson	Klamath	Malheur

Curry – **See Area 5 rate**

Add $1.00 to base rate for work performed on any swinging platform, swinging chair or swinging ladder.

Add $1.00 to base rate for work where a worker is exposed to resins, chemicals or acid.

Area 7 (Region 10)	**35.36**	**21.31**

Reference Counties

Crook	Deschutes	Jefferson

Add $1.00 to base rate for work performed on any swinging platform, swinging chair or swinging ladder.

Add $1.00 to base rate for work where a worker is exposed to resins, chemicals or acid.

SOFT FLOOR LAYER	**37.23**	**18.17**

SPRINKLER FITTER

Area 1 (Regions 1, 2, 3, 4, 5, 6, 7, 8, 9, 10, 11, 12, and 14)	**44.13**	**25.84**

Reference Counties

Benton	Douglas	Klamath	Multnomah
Clackamas	Gilliam	Lake	Polk
Clatsop	Grant	Lane	Sherman
Columbia	Harney	Lincoln	Tillamook
Coos	Hood River	Linn	Umatilla
Crook	Jackson	Malheur	Wasco
Curry	Jefferson	Marion	Washington
Deschutes	Josephine	Morrow	Wheeler
			Yamhill

Area 2 (Regions 12, 13, 14)	**37.81**	**25.83**

Reference Counties

Baker	Union	Wallowa

Gilliam – **See Area 1 rate**	Malheur – **See Area 1 rate**	Umatilla – **See Area 1 rate**
Grant – **See Area 1 rate**	Morrow – **See Area 1 rate**	

TENDER TO MASON TRADES (Brick and Stonemason, Mortar Mixer, Hod Carrier)	**38.79**	**16.55**

Add $0.50 to base rate for refractory repair work.

TENDER TO PLASTERER AND STUCCO MASON

Zone A (Base Rate)	**37.62**	**17.80**

Zone Differential for Tender to Plasterer and Stucco Mason
Add to Zone A Base Rate

Zone B **6.00** per hour
Zone C **9.00** per hour
Zone D **12.00** per hour

Zone A: Projects located within 60 miles of city hall in the reference cities listed.
Zone B: More than 61 miles but less than 80 miles.
Zone C: More than 81 miles but less than 100 miles.
Zone D: More than 101 miles

Reference Cities

Bend	Eugene	Medford	Portland	Seaside
Coos Bay	La Grande	Newport	Salem	The Dalles

Add $0.50 to base rate for refractory repair work.

TESTING AND BALANCING (TAB) TECHNICIAN

For work performed under the Sheet Metal classification, including Air-Handling Equipment, Ductwork

See SHEET METAL WORKER RATE

For work performed under the Plumber/Pipefitter/Steamfitter classification, including Water Distribution Systems

See PLUMBER/PIPEFITTER/STEAMFITTER RATE

TILE SETTER/TERRAZZO WORKER: Hard Tile Setter	**37.65**	**20.83**

This trade is tended by “Tile, Terrazzo, & Marble Finisher.”

Add $1.00 when performing terrazzo work.

Add $1.00 when working with epoxy, furnane, or alkor acetylene.

TILE, TERRAZZO, AND MARBLE FINISHER

1. TILE, TERRAZZO FINISHER	**28.29**	**15.30**

Add $1.00 when performing terrazzo work.

Add $1.00 when working with epoxy, furnane, or alkor acetylene.

2. BRICK & MARBLE FINISHER	**28.29**	**15.43**

Add $1.00 per hour to base rate for refractory repair work.

TRUCK DRIVER

Zone A (Base Rate)

Group 1	**30.09**	**16.73**
Group 2	**30.23**	**16.73**
Group 3	**30.37**	**16.73**
Group 4	**30.67**	**16.73**
Group 5	**30.91**	**16.73**
Group 6	**31.10**	**16.73**
Group 7	**31.32**	**16.73**

Zone differential for Truck Drivers
Add to Zone A Base Rate

Zone B	**.65** per hour
Zone C	**1.15** per hour
Zone D	**1.70** per hour
Zone E	**2.75** per hour

Zone A: Projects within 30 miles of the cities listed.
Zone B: More than 30 miles but less than 40 miles.
Zone C: More than 40 miles but less than 50 miles.
Zone D: More than 50 miles but less than 80 miles.
Zone E: More than 80 miles.

Reference Cities

Albany	Burns	Hermiston	Madras	Oregon City	Roseburg
Astoria	Coos Bay	Hood River	Medford	Pendleton	Salem
Baker	Corvallis	Klamath Falls	McMinnville	Portland	The Dalles
Bend	Eugene	La Grande	Newport	Port Orford	Tillamook
Bingen	Goldendale	Lakeview	Ontario	Reedsport	Vancouver
Brookings	Grants Pass	Longview			

Note: All job or project locations shall be computed (determined) on the basis of road miles and in the following manner. A mileage measurement will start at the entrance to the respective city hall, facing the project (if possible), and shall proceed by the normal route (shortest time-best road) to the geographical center on the highway, railroad, and street construction projects (end of measurement). On all other project contracts, the geographical center where the major portion of the construction is located, shall be considered the center of the project (end measurement).

LIST OF CONTRACTORS INELIGIBLE
TO RECEIVE PUBLIC WORKS CONTRACTS
PUBLICATION DATE: JULY 1, 2022

To: All Oregon Contracting Agencies

Pursuant to ORS 279C.860, contractors on this list are ineligible to receive public works contracts subject to the Prevailing Wage Rate Law. These contractors and subcontractors, as well as any firm, corporation, partnership or association in which the contractor or subcontractor has a financial interest are ineligible to receive public works contracts until removed from this list. You can find the most current and up to date list of contractors ineligible to receive public works contracts on our website at https://www.oregon.gov/boli/employers/Pages/pwr-ineligible-contractors.aspx.

If you have questions regarding the list or for the most current information regarding persons ineligible to receive prevailing wage contracts, please contact the Prevailing Wage Rate Coordinator in Portland at (971) 353-2416.

	CONTRACTOR NAME	DATE PLACED	REMOVAL DATE
1.	**A1 Dumptruck Services LLC** 703 N Hayden Meadows Dr., #206 Portland, OR 97213 731 N Hayden Meadows Dr., #206 Portland, OR 97217 2408 NE 164th Avenue Vancouver, WA 98684	February 24, 2020	February 23, 2027
2.	**Advanced Flagging & Pilot Car Inc.** 16400 NE Las Brisas Ct., Apt. 43 Portland, OR 97230 650 NE Holladay St. Portland, OR 97232 16400 NE Las Brisas Ct. Portland, OR 97230	February 5, 2021	February 4, 2024
3.	**Barker, Michael** 32966 Tennessee Road Lebanon, OR 97355	January 5, 2021	January 4, 2024
4.	**Bell-Eddy, Kimberly** 8535 Woodard Ave. SE Salem, OR 97317	January 12, 2016	January 11, 2023
5.	**Cameron Creations** **Steven Cameron** **Nancy Cameron** PO Box 2 Lowell, OR 97452	May 25, 2000	Not to be Removed
6.	**Canell's Flagging LLC** 731 N Hayden Meadows Dr., Ste 107 Portland, OR 97217	November 24, 2020	November 23, 2023
7.	**Canell, Angela** 2416 NE 11th Avenue Portland, OR 97212 529 SE Grand #307 Portland, OR 97214	November 24, 2020	November 23, 2023
8.	**CJ Construction, Inc.** 2969 Ferguson St NW Salem, OR 97304 846 55th Ave. Salem, OR 97304	December 11, 2020	November 6, 2023

	CONTRACTOR NAME	DATE PLACED	REMOVAL DATE
9.	**Covington, Timothy** **aka Tim York** 16055 NE Stanton St. Portland, OR 97230 2933 NE 11th Ave. Portland, OR 97212 12231 NE Stanton St. Portland, OR 97230	April 13, 2021	April 12, 2024
10.	**Diversified Masonry LLC** PO Box 144 Ranchester, WY 82839	January 5, 2021	January 4, 2024
11.	**Friedman, Jennifer** 2526 Ellen Lane NW Salem, OR 97304 4400 Shaw St NW Salem, OR 97304 4400 Salem-Dallas Hwy Salem, OR 97304 PO Box 5172 Salem, OR 97304	December 11, 2020	October 10, 2023
12.	**Friedman, Scott** 2969 Ferguson St NW Salem, OR 97304 4400 Dallas Hwy Salem, OR 97304 PO Box 5172 Salem, OR 97304	December 11, 2020	October 10, 2023
13.	**Graeme, Eugene** 169 SE Cody Lane Madras, OR 97741	July 3, 2017	July 2, 2027
14.	**Green Thumb Landscape and Maintenance, Inc.,** **aka Green Thumb Landscaping,** **aka GT General Contracting** 4400 Dallas Hwy Salem, OR 97304 PO Box 5172 Salem, OR 97304	December 11, 2020	October 10, 2023
15.	**Green Thumb LLC, aka Green Thumb Contracting** 4400 Salem-Dallas Hwy Salem, OR 97304 4400 Shaw St NW Salem, OR 97304 PO Box 5172 Salem, OR 97304	December 11, 2020	October 10, 2023
16.	**High-N-Shine Concrete Floors** 9024 Silver Star Ave. Vancouver, WA 98664	February 3, 2020	February 2, 2023

	CONTRACTOR NAME	DATE PLACED	REMOVAL DATE
17.	**Hoang, Lisa** **aka Kim Lien Hoang,** **aka Lien Kim Hoang,** **aka Kim Hope,** **aka Lisa K Ryan,** **aka Ryan Lien Hoang,** **aka Kim L Hoang,** **aka Lien Hoang Ryan,** **aka Lien K Hoang-Ryan,** **aka Hoang K Lien,** **aka Lisa Hall,** **aka Lisa Kim Ryan,** **aka Lien Ryan,** **aka Lien Hoang Ryan,** **aka Kim Hoang Lien,** **aka K Lisa Hoang** 703 N Hayden Meadows Dr, #206 Portland, OR 97213 731 N Hayden Meadows Dr, #206 Portland, OR 97217 2408 NE 164th Avenue Vancouver, WA 98684	February 24, 2020	February 23, 2027
18.	**Kim Bell Flagging, Inc.** 8535 Woodard Ave. SE Salem, OR 97317	January 12, 2016	January 11, 2023
19.	**Miller, David** 731 NW Naito Parkway, #215 Portland, OR 97209	June 17, 2020	Not to be Removed
20.	**Nam, Sang In** **dba Cornerstone Janitorial Services** 130 NE Danbury Ave. Hillsboro, OR 97124	September 20, 2016	Not to be Removed
21.	**Nguyen, Hai T.** 9024 Silver Star Ave. Vancouver, WA 98664	February 3, 2020	February 2, 2023
22.	**NW Flagging LLC** 703 N Hayden Meadows Dr., #206 Portland, OR 97213 731 N Hayden Meadows Dr., #206 Portland, OR 97217 2408 NE 164th Avenue Vancouver, WA 98684	February 24, 2020	February 23, 2027
23.	**Oregon Building & Landscaping Services LLC** 703 N Hayden Meadows Dr., #206 Portland, OR 97213 731 N Hayden Meadows Dr., #206 Portland, OR 97217 2408 NE 164th Avenue Vancouver, WA 98684	February 24, 2020	February 23, 2027

LIST OF CONTRACTORS INELIGIBLE
TO RECEIVE PUBLIC WORKS CONTRACTS
PUBLICATION DATE: JULY 1, 2022

	CONTRACTOR NAME	DATE PLACED	REMOVAL DATE
24.	**Pacific NW Drywall & Acoustics LLC** **aka Pacific NW Drywall& Acoustics LLC** 731 NW Naito Parkway #215 Portland, OR 97209	June 17, 2020	Not to be Removed
25.	**Polson, Pacharee** 9024 Silver Star Ave. Vancouver, WA 98664	February 3, 2020	February 2, 2023
26.	**Regional Traffic Management LLC** 703 N Hayden Meadows Dr., #206 Portland, OR 97213 731 N Hayden Meadows Dr., #206 Portland, OR 97217 2408 NE 164th Avenue Vancouver, WA 98684	February 24, 2020	February 23, 2027
27.	**Tatom, Alan** 168 Clearwater Avenue NE Salem, OR 97301	July 10, 2015	July 9, 2025
28.	**Thomas, Antonio** 16400 NE Las Brisas Ct., Apt. 43 Portland, OR 97230 650 NE Holladay St. Portland, OR 97232 16400 NE Las Brisas Ct. Portland, OR 97230	February 5, 2021	February 4, 2024
29.	**Walker, Phillip** 580 Market Street NE Salem, OR 97301	July 10, 2015	July 9, 2025
30.	**WCI Construction LLC** 169 SE Cody Lane Madras, OR 97741	July 3, 2017	July 2, 2027
31.	**WWJD Traffic Control, Inc.** 168 Clearwater Avenue NE Salem, OR 97301	July 10, 2015	July 9, 2025

VAL HOYLE, COMMISSIONER
BUREAU OF LABOR AND INDUSTRIES

Prevailing Wage Rate Laws Handbook

The 2022 edition of the ***Prevailing Wage Rate Laws Handbook*** is now available on our website at https://www.oregon.gov/boli/employers/Pages/prevailing-wage.aspx.

In addition to providing this and other PWR publications, Oregon BOLI Labor & Industries' PWR Unit regularly offers free, informational seminars for both public agencies and contractors. The current schedule is available online at https://www.oregon.gov/boli/employers/Pages/prevailing-wage-seminars.aspx.

If you are interested in being included on our mailing lists for future seminar notifications, please contact us at PWR.Email@boli.oregon.gov or (971) 353-2416.

Occupation and Premium/Differential Pay	Base Rate	Fringe Rate
GLAZIER	**44.43**	**25.29**

Add $1.00 to base rate when employee works from a swing stage, scaffold, suspended contrivance or mechanical apparatus from the third floor up or thirty feet of free fall (whichever is less), and employee is required to wear a safety belt.

Add twenty percent (20%) to base rate when employee works from a bosun chair (non-motorized single-man apparatus), regardless of height.

Certified welders shall receive twenty percent (20%) above the base rate for actual time spent performing welding duties.

IRONWORKER	**41.62**	**31.72**

Zone Differential for Ironworker
(Add to Basic Hourly Rate)

Zone 2 **5.63/**hr. or $45.00 maximum per day
Zone 3 **8.75**/hr. or $70.00 maximum per day
Zone 4 **11.25/**hr. or $90.00 maximum per day

Zone 1: Projects located within 45 miles of city hall in the reference cities listed below.
Zone 2: More than 46 miles, but less than 60 miles.
Zone 3: More than 61 miles, but less than 100 miles.
Zone 4: More than 100 miles.

Note: Zone pay for Ironworkers shall be determined using the quickest route per Google Maps and computed from the city hall or dispatch center of the reference cities listed below **or** the residence of the employee, whichever is nearer to the project.

Reference Cities and Dispatch Center

Medford Portland

LIMITED ENERGY ELECTRICIAN

Area 2 (Regions 12 and 13)	**34.51**	**16.04**

Reference Counties

Baker	Grant	Umatilla	Wallowa
Gilliam	Morrow	Union	Wheeler

PWR APPRENTICESHIP RATES EFFECTIVE OCTOBER 1, 2022

Contact BOLI at (971) 353-2416 if you have any questions regarding the use of these apprenticeship rates.

The percentages shown for the various apprentice periods are taken from union agreements and may differ from the committee standard (ATD) for that trade. Please verify these percentages before using them.

CLASSIFICATION

Journeyman Base Hourly Rate Journeyman Fringe Rate		Percentage / Hours	Base Hourly Rate	Fringe Rate
ASBESTOS WORKER				
	Period			
$57.17	1st Yr/1st 6 mos	45%	$25.73	$13.88
$23.02	1st yr/2nd 6 mos	50%	$28.59	$17.85
	2nd Year	65%	$37.16	$17.85
	3rd Year	75%	$42.88	$28.72
	4th Year	85%	$48.59	$28.72
BOILERMAKER				
	Hours			
$40.46	0-1000	70%	$28.32	$30.59
$30.59	1001-2000	75%	$30.35	$30.59
	2001-3000	80%	$32.37	$30.59
	3001-4000	85%	$34.39	$30.59
	4001-5000	90%	$36.41	$30.59
	5001-6000	95%	$38.44	$30.59
BRICK AND MARBLE FINISHER				
$28.29		1-1000 hrs	$21.09	$14.71
$15.43		1001-2000 hrs	$23.34	$14.71
BRICKLAYER				
	Hours			
$43.00	1-1000	50%	$21.50	$24.25
$24.25	1000-2000	55%	$23.65	$24.25
	2000-3000	60%	$25.80	$24.25
	3000-4000	70%	$30.10	$24.25
	4000-5000	80%	$34.40	$24.25
	5000-6000	90%	$38.70	$24.25
CARPENTER				
Group 1	***Period***			
$44.80	1st	60%	$26.88	$19.21
$19.21	2nd	65%	$29.12	$19.21
	3rd	70%	$31.36	$19.21
	4th	75%	$33.60	$19.21
	5th	80%	$35.84	$19.21
	6th	85%	$38.08	$19.21
	7th	90%	$40.32	$19.21
	8th	95%	$42.56	$19.21

PWR APPRENTICESHIP RATES EFFECTIVE OCTOBER 1, 2022

Contact BOLI at (971) 353-2416 if you have any questions regarding the use of these apprenticeship rates.

The percentages shown for the various apprentice periods are taken from union agreements and may differ from the committee standard (ATD) for that trade. Please verify these percentages before using them.

CLASSIFICATION

Journeyman Base Hourly Rate Journeyman Fringe Rate			Percentage / Hours	Base Hourly Rate	Fringe Rate
CARPENTER (continued)					
	Group 2	***Period***			
$44.97		1st	60%	$26.98	$19.21
$19.21		2nd	65%	$29.23	$19.21
		3rd	70%	$31.48	$19.21
		4th	75%	$33.73	$19.21
		5th	80%	$35.98	$19.21
		6th	85%	$38.22	$19.21
		7th	90%	$40.47	$19.21
		8th	95%	$42.72	$19.21
	Group 3	***Period***			
$50.24		1st	60%	$30.14	$10.04
$19.21		2nd	65%	$32.66	$10.04
		3rd	70%	$35.17	$19.21
		4th	75%	$37.68	$19.21
		5th	80%	$40.19	$19.21
		6th	85%	$42.70	$19.21
		7th	90%	$45.22	$19.21
		8th	95%	$47.73	$19.21
	Group 4 - Eliminated				
	Group 5	***Period***			
$45.40		1st	60%	$27.24	$19.21
$19.21		2nd	73%	$33.14	$19.21
		3rd	75%	$34.05	$19.21
		4th	80%	$36.32	$19.21
		5th	83%	$37.68	$19.21
		6th	85%	$38.59	$19.21
		7th	90%	$40.86	$19.21
		8th	95%	$43.13	$19.21
	Group 6	***Period***			
$45.74		1st	60%	$27.44	$19.21
$19.21		2nd	73%	$33.39	$19.21
		3rd	75%	$34.31	$19.21
		4th	80%	$36.59	$19.21
		5th	83%	$37.96	$19.21
		6th	85%	$38.88	$19.21
		7th	90%	$41.17	$19.21
		8th	95%	$43.45	$19.21

PWR APPRENTICESHIP RATES EFFECTIVE OCTOBER 1, 2022

Contact BOLI at (971) 353-2416 if you have any questions regarding the use of these apprenticeship rates.

The percentages shown for the various apprentice periods are taken from union agreements and may differ from the committee standard (ATD) for that trade. Please verify these percentages before using them.

CLASSIFICATION

Journeyman Base Hourly Rate Journeyman Fringe Rate		Percentage / Hours	Base Hourly Rate	Fringe Rate
CEMENT MASON				
	Hours			
$39.97	1-1000	55%	$22.56	$19.77
$21.17	1001-2000	65%	$26.74	$19.77
	2001-3000	70%	$28.83	$19.77
	3001-4000	75%	$30.92	$19.77
	4001-5000	85%	$35.10	$19.77
	5001-6000	90%	$37.19	$19.77
DRYWALL INSTALLER				
	Period			
$44.74	1st	60%	$26.84	$10.03
$18.91	2nd	65%	$29.08	$10.03
	3rd	70%	$31.32	$18.91
	4th	75%	$33.56	$18.91
	5th	80%	$35.79	$18.91
	6th	85%	$38.03	$18.91
	7th	90%	$40.27	$18.91
	8th	95%	$42.50	$18.91
DRYWALL TAPER				
	Hours			
$42.52	1st 1000	60%	$25.51	$8.36
$19.13	2nd 1000	70%	$29.76	$8.36
	3rd 1000	75%	$31.89	$19.13
	4th 1000	80%	$34.02	$19.13
	5th 1000	85%	$36.14	$19.13
	6th 1000	90%	$38.27	$19.13
ELECTRICIAN				
Area 1				
$40.97	***Period***			
$18.58	1st	45%	$18.44	$11.39
	2nd	50%	$20.49	$11.45
	3rd	55%	$22.53	$15.10
	4th	60%	$24.58	$15.49
	5th	65%	$26.63	$15.87
	6th	70%	$28.68	$16.26
	7th	75%	$30.73	$16.64
	8th	80%	$32.78	$17.03
Area 2	***Period***			
$51.75	1st	40%	$20.70	$10.75
$24.18	2nd	45%	$23.29	$16.84
	3rd	50%	$25.88	$17.51
	4th	65%	$33.64	$19.51
	5th	80%	$41.40	$21.51
	6th	85%	$43.99	$22.18

PWR APPRENTICESHIP RATES EFFECTIVE OCTOBER 1, 2022

Contact BOLI at (971) 353-2416 if you have any questions regarding the use of these apprenticeship rates.

The percentages shown for the various apprentice periods are taken from union agreements and may differ from the committee standard (ATD) for that trade. Please verify these percentages before using them.

CLASSIFICATION

Journeyman Base Hourly Rate Journeyman Fringe Rate			Percentage / Hours	Base Hourly Rate	Fringe Rate
ELECTRICIAN (continued)					
	Area 3	***Period***			
$43.97		1st	50%	$21.99	$11.66
$22.81		2nd	55%	$24.18	$11.73
		3rd	60%	$26.38	$18.08
		4th	65%	$28.58	$18.68
		5th	70%	$30.78	$19.26
		6th	80%	$35.18	$20.45
	Area 4	***Period***			
$49.36		1st	40%	$19.74	$10.59
$20.20		2nd	45%	$22.21	$10.67
		3rd	50%	$24.68	$15.70
		4th	60%	$29.62	$16.59
		5th	70%	$34.55	$17.50
		6th	85%	$41.96	$18.85
	Area 5	***Period***			
$53.85		1st	40%	$21.54	$13.10
$27.84		2nd	45%	$24.23	$13.18
		3rd	50%	$26.93	$20.32
		4th	60%	$32.31	$21.89
		5th	70%	$37.70	$23.46
		6th	85%	$45.77	$25.83
	Area 6	***Period***			
$40.97		1st	45%	$18.44	$11.39
$18.58		2nd	50%	$20.49	$11.45
		3rd	55%	$22.53	$15.10
		4th	60%	$24.58	$15.49
		5th	65%	$26.63	$15.87
		6th	70%	$28.68	$16.26
		7th	75%	$30.73	$16.64
		8th	80%	$32.78	$17.03
ELEVATOR CONSTRUCTOR					
	Area 1				
$59.70		Probationary	50%	$29.85	---
$43.48		1st Year	55%	$32.84	$39.88
		2nd Year	65%	$38.81	$40.43
		3rd Year	70%	$41.79	$40.70
		4th Year	80%	$47.76	$41.25

PWR APPRENTICESHIP RATES EFFECTIVE OCTOBER 1, 2022

Contact BOLI at (971) 353-2416 if you have any questions regarding the use of these apprenticeship rates.

The percentages shown for the various apprentice periods are taken from union agreements and may differ from the committee standard (ATD) for that trade. Please verify these percentages before using them.

CLASSIFICATION

Journeyman Base Hourly Rate Journeyman Fringe Rate		Percentage / Hours	Base Hourly Rate	Fringe Rate
ELEVATOR CONSTRUCTOR (continued)				
	Area 2			
$59.95		50%	$29.98	---
$43.68		55%	$32.97	$39.89
		65%	$38.97	$40.44
		70%	$41.97	$39.53
		80%	$47.96	$41.25
FIRESTOP/CONTAINMENT WORKER				
	Period			
$42.38	1st Year	65%	$27.20	$8.52
$16.69	2nd Year	70%	$28.17	$16.64
	3rd Year	80%	$32.50	$16.64
	4th Year	90%	$36.84	$16.64
GLAZIER				
	Period			
$44.43	1st	45%	$19.99	$23.43
$25.29	2nd	55%	$24.44	$23.77
	3rd	65%	$28.89	$24.10
	4th	75%	$33.33	$24.44
	5th	80%	$35.55	$24.61
	6th	85%	$37.77	$24.78
	7th	90%	$39.99	$24.95
	8th	95%	$42.21	$25.12
HIGHWAY PARKING STRIPER				
	Hours			
$38.18	0-500	60%	$22.91	$0.30
$15.08	501-1000	60%	$22.91	$8.53
	1001-2333	60%	$22.91	$12.46
	2nd period	73%	$27.87	$13.31
	3rd period	88%	$33.60	$14.29
IRONWORKER				
	Period			
$41.62	1st	60%	$24.97	$13.22
$31.72	2nd	65%	$27.05	$13.22
	3rd	70%	$29.13	$31.72
	4th	75%	$31.22	$31.72
	5th	80%	$33.30	$31.72
	6th	85%	$35.38	$31.72
	7th	90%	$37.46	$31.72
	8th	95%	$39.54	$31.72

PWR APPRENTICESHIP RATES EFFECTIVE OCTOBER 1, 2022

Contact BOLI at (971) 353-2416 if you have any questions regarding the use of these apprenticeship rates.

The percentages shown for the various apprentice periods are taken from union agreements and may differ from the committee standard (ATD) for that trade. Please verify these percentages before using them.

CLASSIFICATION

Journeyman Base Hourly Rate Journeyman Fringe Rate		Percentage / Hours	Base Hourly Rate	Fringe Rate
LABORER				
	Group 1			
$34.98		63%	$22.04	$16.55
$16.55		70%	$24.49	$16.55
		80%	$27.98	$16.55
		90%	$31.48	$16.55
	Group 2			
$36.25		63%	$22.84	$16.55
$16.55		70%	$25.38	$16.55
		80%	$29.00	$16.55
		90%	$32.63	$16.55
	Group 3			
$30.38		63%	$19.14	$16.55
$16.55		70%	$21.27	$16.55
		80%	$24.30	$16.55
		90%	$27.34	$16.55
	Group 4			
$24.17		63%	$15.23	$16.55
$16.55		70%	$16.92	$16.55
		80%	$19.34	$16.55
		90%	$21.75	$16.55
LATHER, ACOUSTICAL CARPENTER & CEILING INSTALLER				
	Period			
$44.74	1st	60%	$26.84	$10.03
$18.91	2nd	65%	$29.08	$10.03
	3rd	70%	$31.32	$18.91
	4th	75%	$33.56	$18.91
	5th	80%	$35.79	$18.91
	6th	85%	$38.03	$18.91
	7th	90%	$40.27	$18.91
	8th	95%	$42.50	$18.91
LIMITED ENERGY ELECTRICIAN				
Area 1	***Period***			
$33.76	1st	55%	$18.57	$13.81
$14.26	2nd	60%	$20.26	$13.86
	3rd	65%	$21.94	$13.91
	4th	70%	$23.63	$13.96
	5th	75%	$25.32	$14.01
	6th	85%	$28.70	$14.11

PWR APPRENTICESHIP RATES EFFECTIVE OCTOBER 1, 2022

Contact BOLI at (971) 353-2416 if you have any questions regarding the use of these apprenticeship rates.

The percentages shown for the various apprentice periods are taken from union agreements and may differ from the committee standard (ATD) for that trade. Please verify these percentages before using them.

CLASSIFICATION

Journeyman Base Hourly Rate Journeyman Fringe Rate			Percentage / Hours	Base Hourly Rate	Fringe Rate
LIMITED ENERGY ELECTRICIAN (continued)					
	Area 2	**Period**			
$34.51		1st	55%	$18.98	$13.73
$16.04		2nd	60%	$20.71	$13.99
		3rd	65%	$22.43	$14.24
		4th	70%	$24.16	$14.50
		5th	80%	$27.61	$15.01
		6th	85%	$29.33	$15.27
	Area 3	***Period***			
$33.42		1st	55%	$18.38	$19.69
$20.14		2nd	60%	$20.05	$19.74
		3rd	65%	$21.72	$19.79
		4th	70%	$23.39	$19.84
		5th	75%	$25.07	$19.89
		6th	85%	$28.41	$19.99
	Area 4	***Period***			
$36.17		1st	55%	$19.89	$16.77
$17.26		2nd	60%	$21.70	$16.82
		3rd	65%	$23.51	$16.88
		4th	70%	$25.32	$16.93
		5th	75%	$27.13	$16.98
		6th	85%	$30.74	$17.09
	Area 5	***Period***			
$44.23		1st 6 months	50%	$22.12	$12.96
$22.30		2nd 6 months	55%	$24.33	$13.03
		3rd 6 months	60%	$26.54	$18.45
		4th 6 months	65%	$28.75	$18.96
		5th 6 months	70%	$30.96	$19.48
		6th 6 months	80%	$35.38	$20.50
		7th 6 months	90%	$39.81	$21.52
	Area 6	***Period***			
$33.76		1st	55%	$18.57	$13.81
$14.26		2nd	60%	$20.26	$13.86
		3rd	65%	$21.94	$13.91
		4th	70%	$23.63	$13.96
		5th	75%	$25.32	$14.01
		6th	85%	$28.70	$14.11

PWR APPRENTICESHIP RATES EFFECTIVE OCTOBER 1, 2022

Contact BOLI at (971) 353-2416 if you have any questions regarding the use of these apprenticeship rates.

The percentages shown for the various apprentice periods are taken from union agreements and may differ from the committee standard (ATD) for that trade. Please verify these percentages before using them.

CLASSIFICATION

Journeyman Base Hourly Rate Journeyman Fringe Rate		Percentage / Hours	Base Hourly Rate	Fringe Rate
LINE CONSTRUCTOR				
Area 1 & Area 2/Group 2				
Lineman Only	***Period***			
$57.66	1st	60%	$34.60	$16.66
$23.13	2nd	63%	$36.33	$16.73
	3rd	67%	$38.63	$16.84
	4th	72%	$41.52	$16.97
	5th	78%	$44.97	$17.12
	6th	86%	$49.59	$17.33
	7th	90%	$51.89	$17.44
MARBLE SETTER	***Hours***			
$44.00	1-1000	50%	$22.00	$24.25
$24.25	1000-2000	55%	$24.20	$24.25
	2000-3000	60%	$26.40	$24.25
	3000-4000	70%	$30.80	$24.25
	4000-5000	80%	$35.20	$24.25
	5000-6000	90%	$39.60	$24.25
PAINTER				
Commercial				
$30.72		70%	$21.50	$8.43
$14.18		75%	$23.04	$8.43
		80%	$24.58	$8.43
		85%	$26.11	$14.18
		90%	$27.65	$14.18
		95%	$29.18	$14.18
Industrial				
$32.52		70%	$22.76	$8.43
$14.18		75%	$24.39	$8.43
		80%	$26.02	$8.43
		85%	$27.64	$14.18
		90%	$29.27	$14.18
		95%	$30.89	$14.18
Bridge				
$38.19		70%	$26.73	$8.43
$14.18		75%	$28.64	$8.43
		80%	$30.55	$8.43
		85%	$32.46	$14.18
		90%	$34.37	$14.18
		95%	$36.28	$14.18

PWR APPRENTICESHIP RATES EFFECTIVE OCTOBER 1, 2022

Contact BOLI at (971) 353-2416 if you have any questions regarding the use of these apprenticeship rates.

The percentages shown for the various apprentice periods are taken from union agreements and may differ from the committee standard (ATD) for that trade. Please verify these percentages before using them.

CLASSIFICATION

Journeyman Base Hourly Rate Journeyman Fringe Rate		Percentage / Hours	Base Hourly Rate	Fringe Rate
PLASTERER				
$41.16		60%	$24.70	$16.93
$19.23		65%	$26.75	$16.93
		70%	$28.81	$16.93
		75%	$30.87	$16.93
		80%	$32.93	$16.93
		85%	$34.99	$16.93
		90%	$37.04	$16.93
PLUMBER/PIPEFITTER/STEAMFITTER				
	Area 1			
$34.00		40%	$13.60	$15.87
$17.07		45%	$15.30	$15.87
		50%	$17.00	$15.87
		55%	$18.70	$15.87
		60%	$20.40	$15.87
		65%	$22.10	$15.87
		70%	$23.80	$15.87
		75%	$25.50	$15.87
		80%	$27.20	$15.87
	Area 2			
$54.00	***Period***			
$34.11	1st 6 months	45%	$24.30	$23.64
	2nd 6 months	50%	$27.00	$24.60
	3rd 6 months	55%	$29.70	$25.55
	4th 6 months	60%	$32.40	$26.50
	5th 6 months	65%	$35.10	$27.45
	6th 6 months	70%	$37.80	$28.40
	7th 6 months	75%	$40.50	$29.35
	8th 6 months	80%	$43.20	$30.30
	9th 6 months	85%	$45.90	$31.26
	10th 6 months	85%	$45.90	$31.26
	Area 3			
	Period			
$50.68	1st 6 months	40%	$20.27	$18.78
$35.00	2nd 6 months	50%	$25.34	$18.78
	3rd 6 months	55%	$27.87	$27.71
	4th 6 months	60%	$30.41	$28.52
	5th 6 months	65%	$32.94	$29.33
	6th 6 months	70%	$35.48	$30.14
	7th 6 months	75%	$38.01	$30.95
	8th 6 months	80%	$40.54	$31.76
	9th 6 months	85%	$43.08	$32.57
	10th 6 months	90%	$45.61	$33.38

PWR APPRENTICESHIP RATES EFFECTIVE OCTOBER 1, 2022

Contact BOLI at (971) 353-2416 if you have any questions regarding the use of these apprenticeship rates.

The percentages shown for the various apprentice periods are taken from union agreements and may differ from the committee standard (ATD) for that trade. Please verify these percentages before using them.

CLASSIFICATION

Journeyman Base Hourly Rate Journeyman Fringe Rate			Percentage / Hours	Base Hourly Rate	Fringe Rate
POWER EQUIPMENT OPERATOR					
	Group 1	***Period***			
$51.65		1st	80%	$41.32	$8.10
$16.35		2nd	85%	$43.90	$16.35
		3rd	90%	$46.49	$16.35
		4th	95%	$49.07	$16.35
	Group 1A	***Period***			
$53.81		1st	80%	$43.05	$8.10
$16.35		2nd	85%	$45.74	$16.35
		3rd	90%	$48.43	$16.35
		4th	95%	$51.12	$16.35
	Group 1B	***Period***			
$55.97		1st	80%	$44.78	$8.10
$16.35		2nd	85%	$47.57	$16.35
		3rd	90%	$50.37	$16.35
		4th	95%	$53.17	$16.35
	Group 2	***Period***			
$49.74		1st	80%	$39.79	$8.10
$16.35		2nd	85%	$42.28	$16.35
		3rd	90%	$44.77	$16.35
		4th	95%	$47.25	$16.35
	Group 3	***Period***			
$48.59		1st	80%	$38.87	$8.10
$16.35		2nd	85%	$41.30	$16.35
		3rd	90%	$43.73	$16.35
		4th	95%	$46.16	$16.35
	Group 4	***Period***			
$45.26		1st	80%	$36.21	$8.10
$16.35		2nd	85%	$38.47	$16.35
		3rd	90%	$40.73	$16.35
		4th	95%	$43.00	$16.35
	Group 5	***Period***			
$44.02		1st	80%	$35.22	$8.10
$16.35		2nd	85%	$37.42	$16.35
		3rd	90%	$39.62	$16.35
		4th	95%	$41.82	$16.35
	Group 6	***Period***			
$40.80		1st	80%	$32.64	$8.10
$16.35		2nd	85%	$34.68	$16.35
		3rd	90%	$36.72	$16.35
		4th	95%	$38.76	$16.35

PWR APPRENTICESHIP RATES EFFECTIVE OCTOBER 1, 2022

Contact BOLI at (971) 353-2416 if you have any questions regarding the use of these apprenticeship rates.

The percentages shown for the various apprentice periods are taken from union agreements and may differ from the committee standard (ATD) for that trade. Please verify these percentages before using them.

CLASSIFICATION

Journeyman Base Hourly Rate Journeyman Fringe Rate		Percentage / Hours	Base Hourly Rate	Fringe Rate
ROOFER				
	Area 1			
$38.78		60%	$23.27	$16.13
$20.48		65%	$25.21	$16.13
		70%	$27.15	$16.13
		75%	$29.09	$20.48
		80%	$31.02	$20.48
		85%	$32.96	$20.48
		90%	$34.90	$20.48
		95%	$36.84	$20.48
	Area 2			
$32.55		60%	$19.53	$12.13
$18.65		65%	$21.16	$12.13
		70%	$22.79	$12.13
		75%	$24.41	$14.63
		80%	$26.04	$14.63
		85%	$27.67	$18.65
		90%	$29.30	$18.65
		95%	$30.92	$18.65
	Area 4			
$38.78		60%	$23.27	$16.13
$20.48		65%	$25.21	$16.13
		70%	$27.15	$16.13
		75%	$29.09	$20.48
		80%	$31.02	$20.48
		85%	$32.96	$20.48
		90%	$34.90	$20.48
		95%	$36.84	$20.48
	Area 5			
$38.78		60%	$23.27	$16.13
$20.48		65%	$25.21	$16.13
		70%	$27.15	$16.13
		75%	$29.09	$20.48
		80%	$31.02	$20.48
		85%	$32.96	$20.48
		90%	$34.90	$20.48
		95%	$36.84	$20.48

PWR APPRENTICESHIP RATES EFFECTIVE OCTOBER 1, 2022

Contact BOLI at (971) 353-2416 if you have any questions regarding the use of these apprenticeship rates.

The percentages shown for the various apprentice periods are taken from union agreements and may differ from the committee standard (ATD) for that trade. Please verify these percentages before using them.

CLASSIFICATION

Journeyman Base Hourly Rate Journeyman Fringe Rate		Percentage / Hours	Base Hourly Rate	Fringe Rate
SHEET METAL WORKER				
Area 1				
$45.80		50%	$22.90	$20.54
$25.46		55%	$25.19	$20.73
		60%	$27.48	$20.93
		65%	$29.77	$21.13
		70%	$32.06	$21.33
		75%	$34.35	$21.53
		80%	$36.64	$21.73
		85%	$38.93	$21.92
		90%	$41.22	$22.12
Area 2				
Baker County **(See Area 3 Rates)**				
Malheur County **(See Area 6 Rates)**				
Area 3				
$44.09	1st year/1st half	55%	$24.25	$15.34
$25.28	1st year/2nd half	55%	$25.50	$16.45
		60%	$26.45	$19.82
		70%	$30.86	$21.28
		75%	$33.07	$22.60
		85%	$37.48	$24.21
Area 4				
$37.78		50%	$18.89	$18.77
$22.72		55%	$20.78	$18.90
		60%	$22.67	$19.04
		65%	$24.56	$19.18
		70%	$26.45	$19.32
		75%	$28.34	$19.46
		80%	$30.22	$19.60
		85%	$32.11	$19.73
		90%	$34.00	$19.87
Area 5				
$38.14		50%	$19.07	$19.55
$23.76		55%	$20.98	$19.68
		60%	$22.88	$19.82
		65%	$24.79	$19.96
		70%	$26.70	$20.10
		75%	$28.61	$20.24
		80%	$30.51	$20.38
		85%	$32.42	$20.51
		90%	$34.33	$20.65

PWR APPRENTICESHIP RATES EFFECTIVE OCTOBER 1, 2022

Contact BOLI at (971) 353-2416 if you have any questions regarding the use of these apprenticeship rates.

The percentages shown for the various apprentice periods are taken from union agreements and may differ from the committee standard (ATD) for that trade. Please verify these percentages before using them.

CLASSIFICATION

Journeyman Base Hourly Rate Journeyman Fringe Rate		Percentage / Hours	Base Hourly Rate	Fringe Rate
SHEET METAL WORKER (continued)				
	Area 6			
$32.12		50%	$16.06	$17.76
$21.39		55%	$17.67	$17.89
		60%	$19.27	$18.03
		65%	$20.88	$18.17
		70%	$22.48	$18.31
		75%	$24.09	$18.45
		80%	$25.70	$18.59
		85%	$27.30	$18.72
		90%	$28.91	$18.86
	Area 7			
$35.36		50%	$17.68	$18.47
$21.31		55%	$19.45	$18.52
		60%	$21.22	$18.57
		65%	$22.98	$18.61
		70%	$24.75	$18.66
		75%	$26.52	$18.71
		80%	$28.29	$18.76
		85%	$30.06	$18.81
		90%	$31.82	$18.85
SOFT FLOOR LAYER				
	Period			
$37.23	1st 6 months	60%	$21.91	$7.90
$18.17	2nd 6 months	65%	$23.74	$16.25
	3rd 6 months	70%	$25.56	$16.52
	4th 6 months	75%	$27.39	$16.80
	5th 6 months	80%	$29.22	$17.07
	6th 6 months	85%	$31.04	$17.35
	7th 6 months	90%	$32.87	$17.62
	8th 6 months	95%	$34.69	$17.90
SPRINKLER FITTER				
Area 1	***Class***			
$44.13	1	45%	$19.86	$8.37
$25.84	2	50%	$22.07	$8.37
	3	55%	$24.27	$19.76
	4	60%	$26.48	$19.76
	5	65%	$28.68	$20.01
	6	70%	$30.89	$20.01
	7	75%	$33.10	$20.01
	8	80%	$35.30	$20.01
	9	85%	$37.51	$20.01
	10	90%	$39.72	$20.01

PWR APPRENTICESHIP RATES EFFECTIVE OCTOBER 1, 2022

Contact BOLI at (971) 353-2416 if you have any questions regarding the use of these apprenticeship rates.

The percentages shown for the various apprentice periods are taken from union agreements and may differ from the committee standard (ATD) for that trade. Please verify these percentages before using them.

CLASSIFICATION

Journeyman Base Hourly Rate Journeyman Fringe Rate		Percentage / Hours	Base Hourly Rate	Fringe Rate
SPRINKLER FITTER (continued)				
Area 2	***Class***			
$37.81	1	45%	$17.01	$8.37
$25.83	2	50%	$18.91	$8.37
	3	55%	$20.80	$19.76
	4	60%	$22.69	$19.76
	5	65%	$24.58	$20.01
	6	70%	$26.47	$20.01
	7	75%	$28.36	$20.01
	8	80%	$30.25	$20.01
	9	85%	$32.14	$20.01
	10	90%	$34.03	$20.01
TENDER TO MASON				
$38.79		63%	$24.44	$16.55
$16.55		70%	$27.15	$16.55
		80%	$31.03	$16.55
		90%	$34.91	$16.55
TENDER TO PLASTERER				
$37.62		63%	$23.70	$17.80
$17.80		70%	$26.33	$17.80
		80%	$30.10	$17.80
		90%	$33.86	$17.80
TILE TERRAZZO SETTER				
	Hours			
$37.65	1-1000	70%	$26.36	$20.83
$20.83	1001-2000	75%	$28.24	$20.83
	2001-3000	80%	$30.12	$20.83
	3001-4000	85%	$32.00	$20.83
	4001-5000	90%	$33.89	$20.83
	5001-6000	95%	$35.77	$20.83
TILE TERRAZZO FINISHER				
$28.29		1-1000 hrs	$21.09	$14.58
$15.30		1001-2000 hrs	$23.34	$14.58